DPS SYSTEM CIRCUIT

GROUP 15

- 1. Design Criteria
- 2. Open circuit and loaded output voltages
- 3. Efficiency
- 4. Output voltage vs. input voltage stability
- 5. Output voltage ripple
- 6. Short circuit current
- 7. PCB Layout

Schematics A

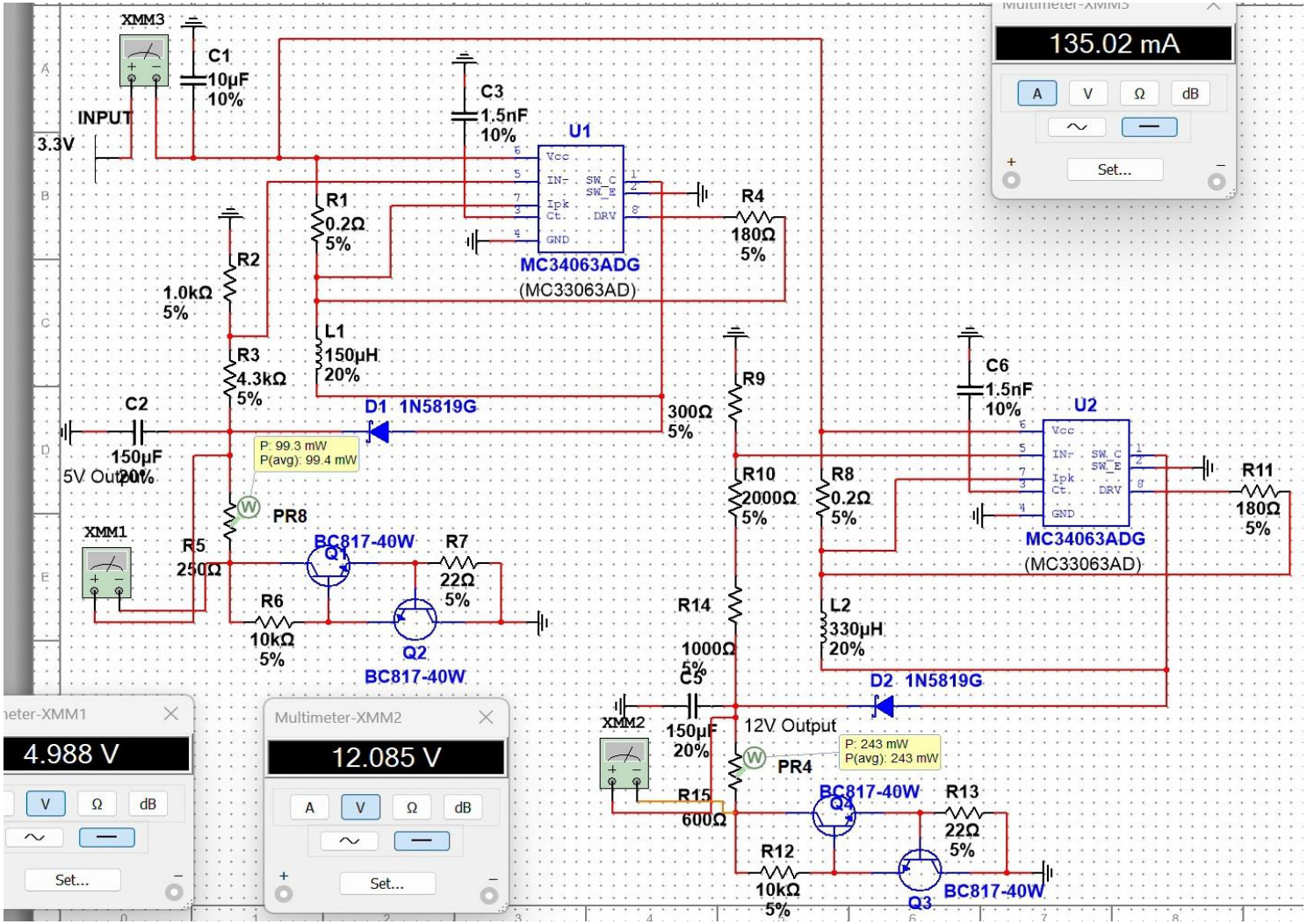

Schematics B

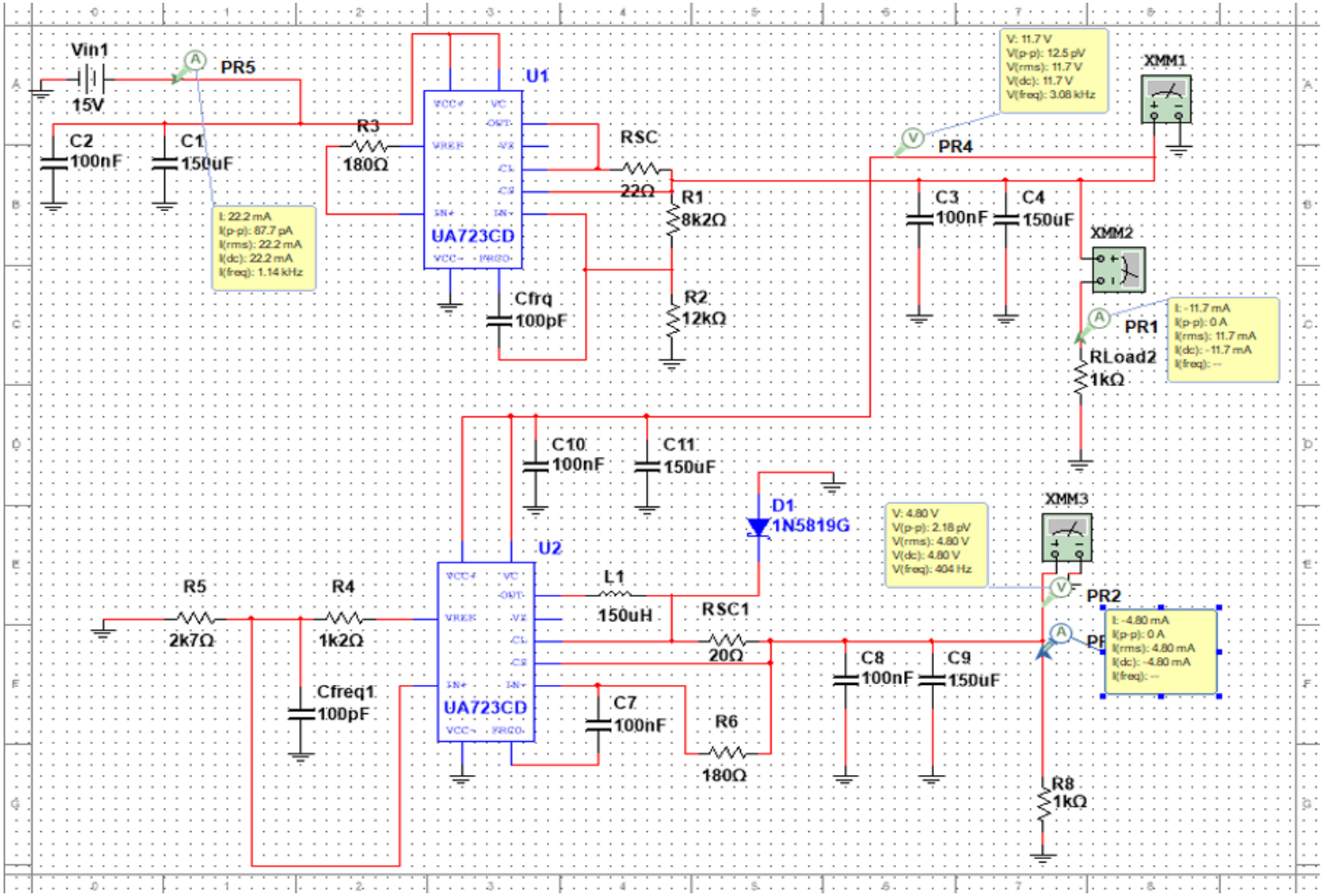

Decision Matrix

Design Criteria	Weight	Yihn	Minjae	Mark	Zi Lynn
The DPS shall have a 5 V with ± 0.15 V open or loaded circuit output whichever you designed it to be. The DPS shall have a 12 V with a ± 0.8 V open or loaded circuit output whichever you designed it to be. The input voltage must not be within ± 10% of either of the output voltages.	1.6	10	8	8	8
The DPS shall have a power efficiency of >60% with 20 mA current load on each and both of the two outputs. Efficiency mark 100/100 marks for >60% efficiency, 77/100 marks for 40-60% efficiency, 62/100 marks for <40% efficiency, 0/100 mark for no calculations	1.3	10	6	10	5
The DPS shall maintain voltage output specifications with an input voltage ± 20% from nominal. Ideal plots will have a 0 V – 30 V input voltage range with the range nominal ± 20% highlighted.	1.1	10	5	5	3
Output voltage ripple compared to what subsequent circuits can withstand.	0.7	3	10	1	8
The DPS shall generate a maximum 30 mA output current under a short circuit condition on either output	0.5	10	10	10	10
PCB layout (Guidelines, layout, neatness)	2	9	7	6	8
Sum of weight x score		**65.1**	**52.1**	49	49.2

loaded output voltages A

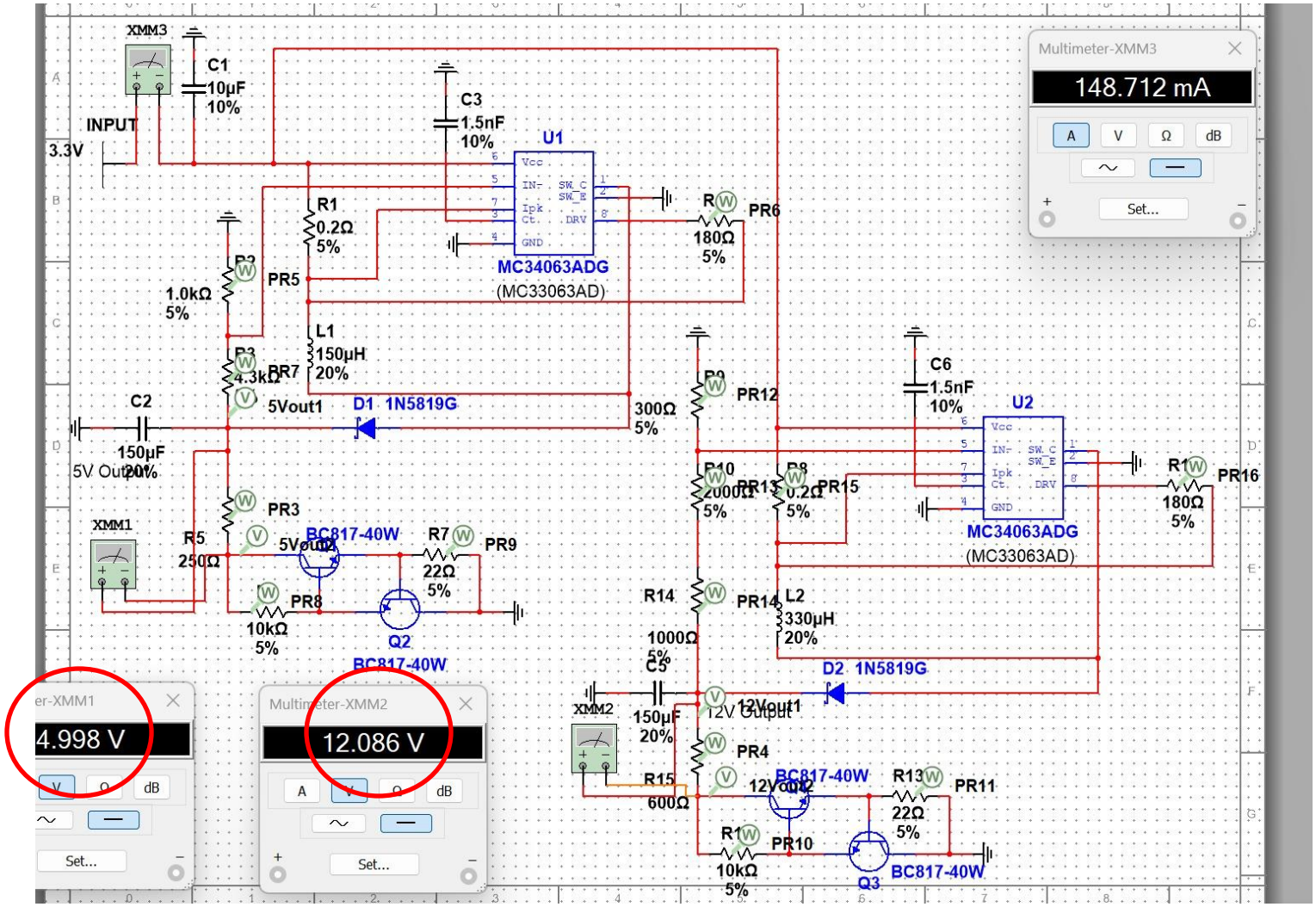

loaded output voltages A

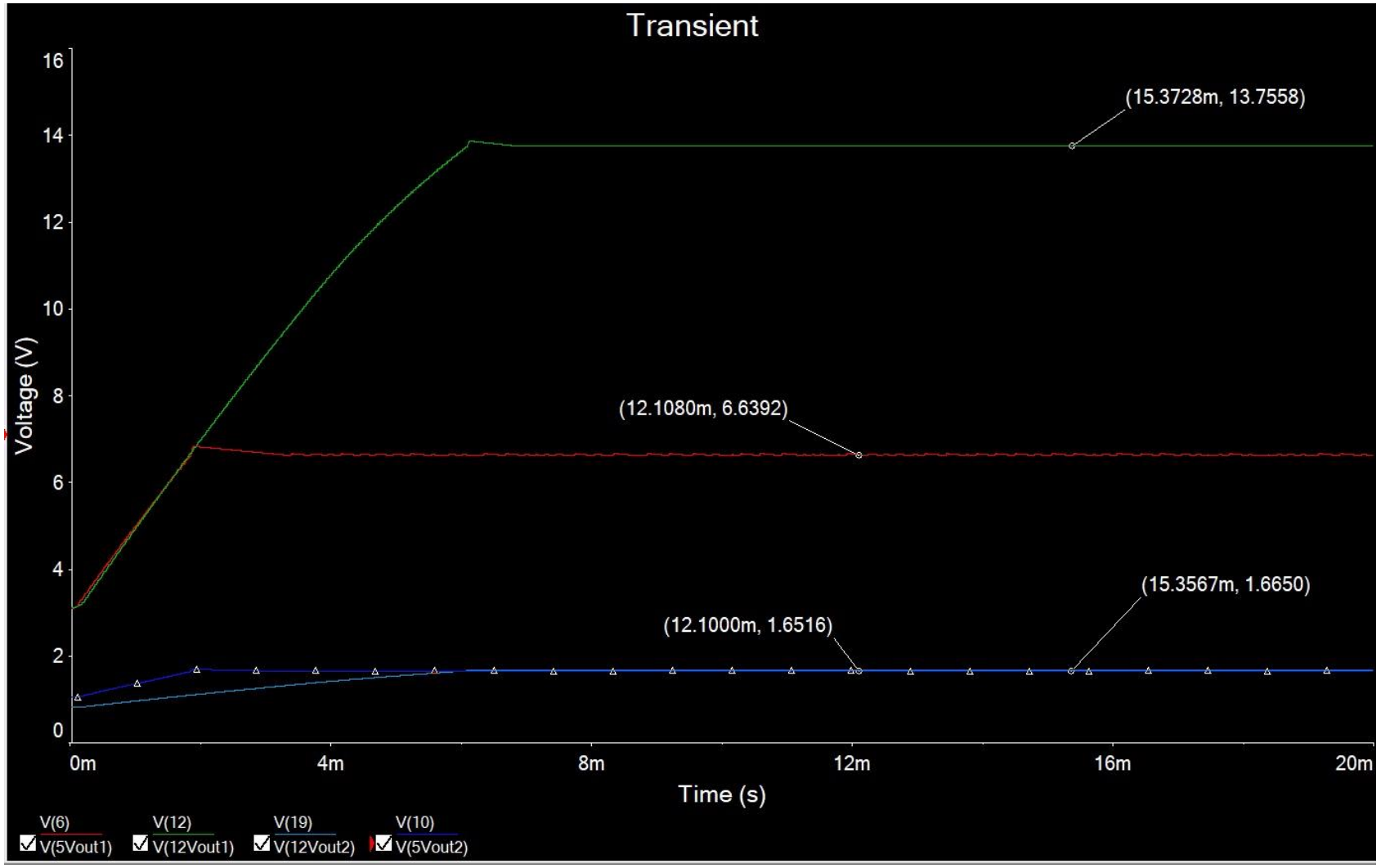

Loaded output voltage B

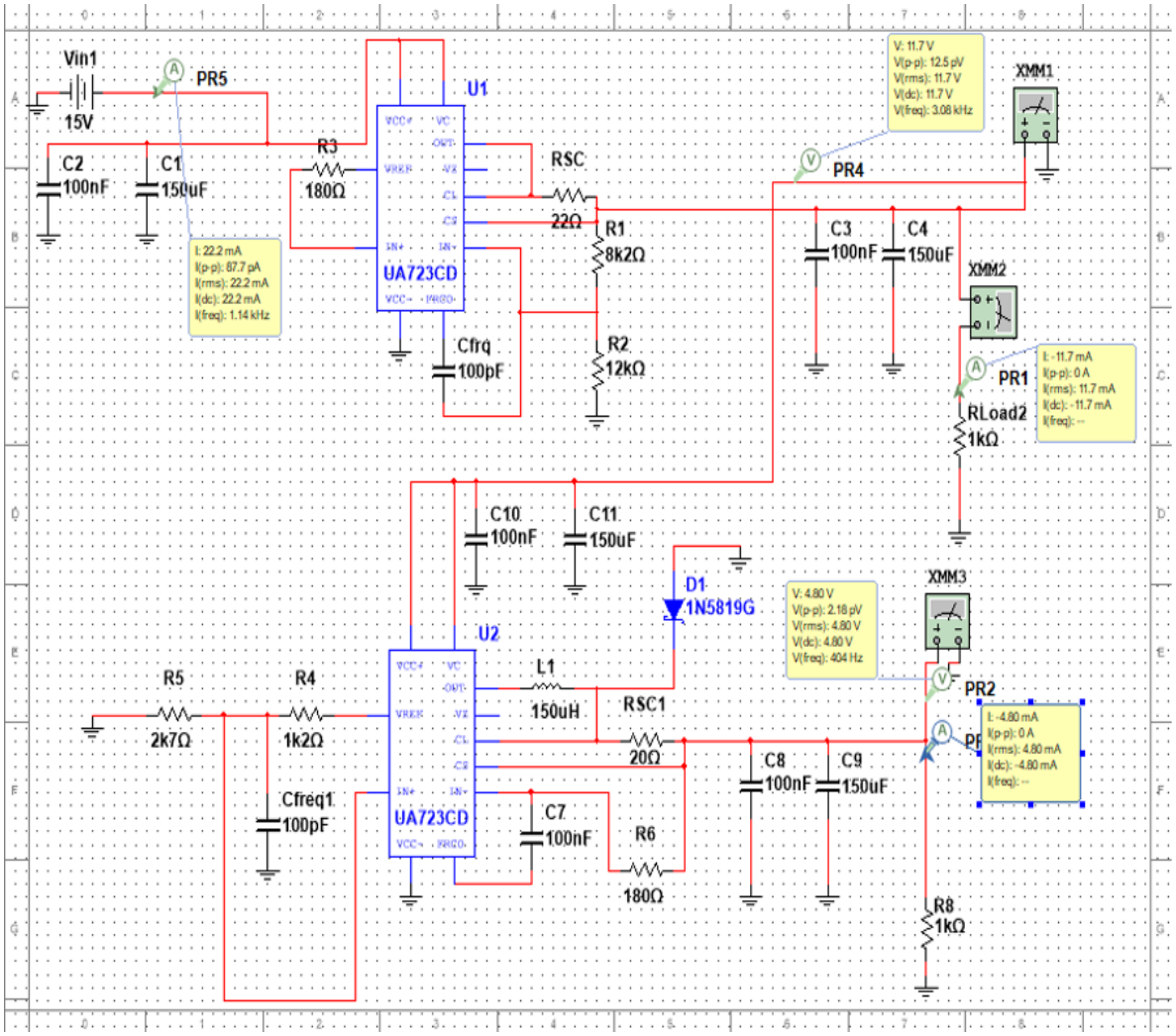

loaded output Voltage B

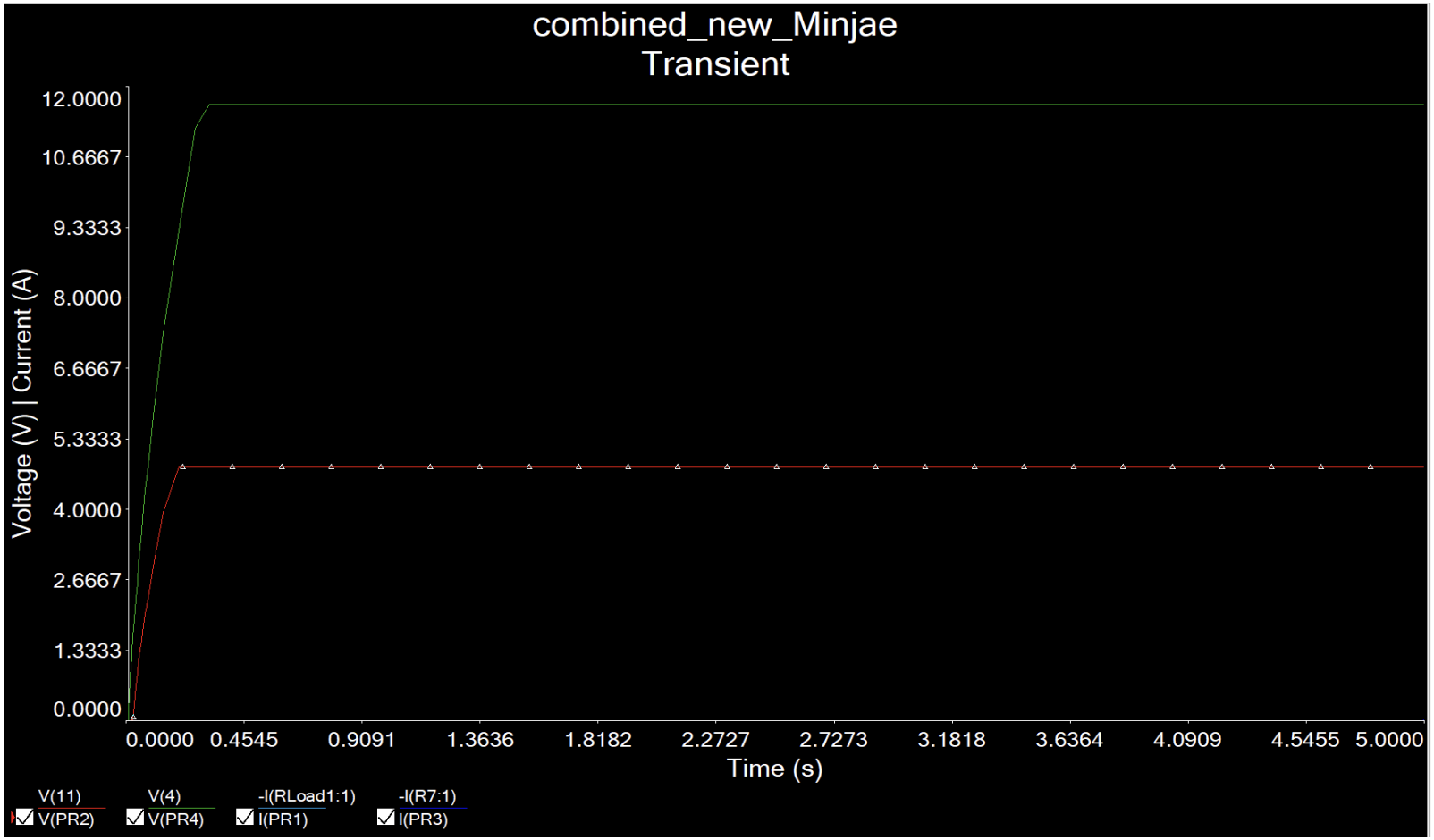

Efficiency A with Current Limit Circuit

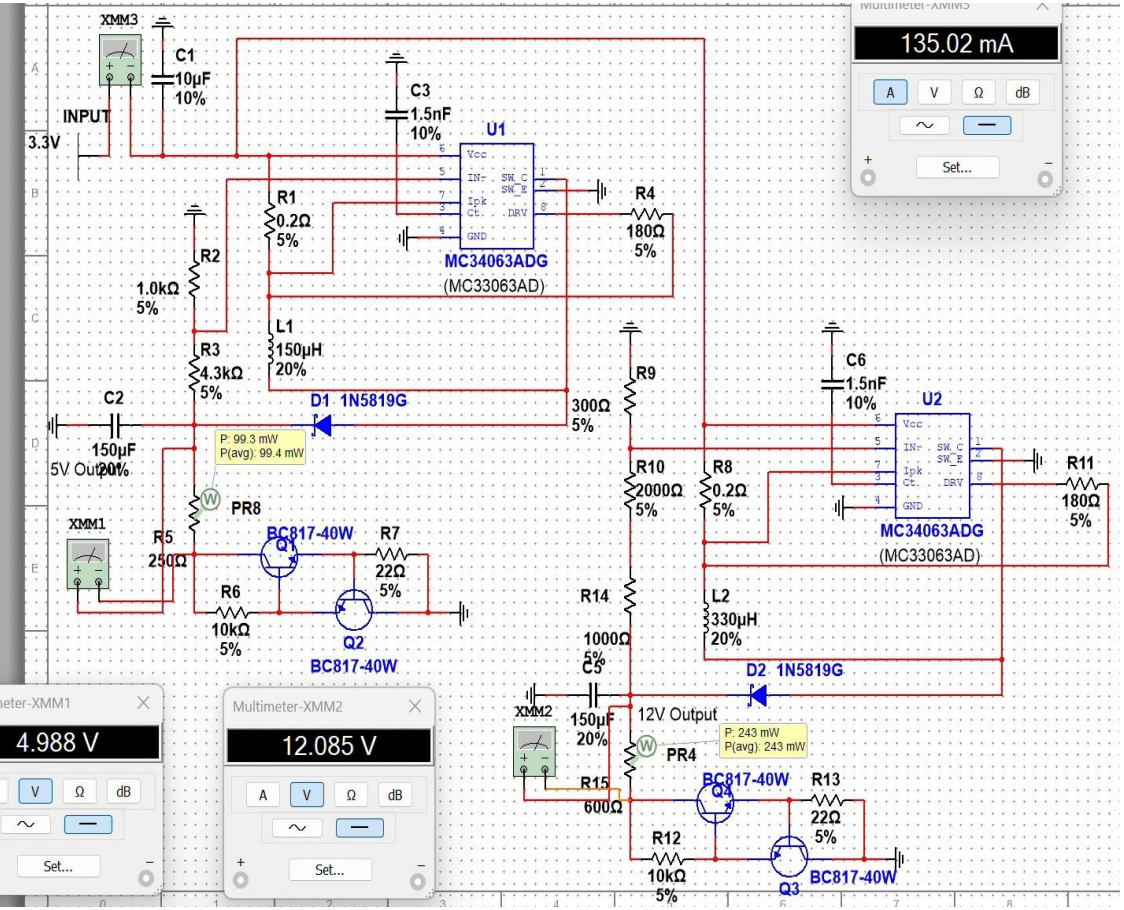

From 3.3 V to 12 V

$$\eta = \frac{12.085\,V \times 20.1\,mA}{3.3\,V \times 135.02\,mA} \times 100 \approx 54.3\%$$

From 3.3 V to 5 V

$$\eta = \frac{4.988\,V \times 19.9\,mA}{3.3\,V \times 135.02\,mA} \times 100 \approx 22.1\%$$

Overall

$$\eta = \frac{12.085\,V \times 20.1\,mA + 4.988\,V \times 19.9\,mA}{3.3\,V \times 135.02\,mA} \times 100 \approx 76.8\%$$

Efficiency A without Current Limit Circuit

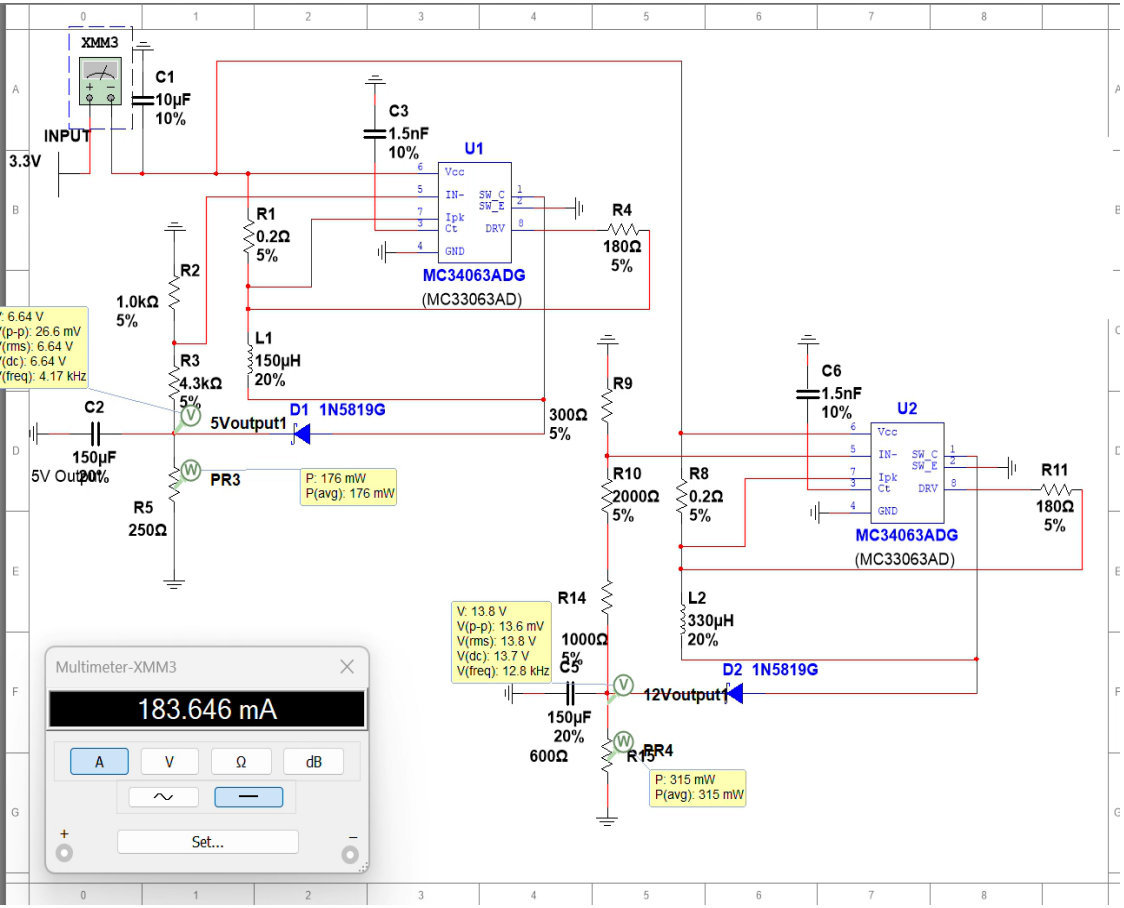

From 3.3 V to 12 V

$$\eta = \frac{13.7\,V \times 23.0\,mA}{3.3\,V \times 183.646\,mA} \times 100 \approx 51.3\%$$

From 3.3 V to 5 V

$$\eta = \frac{6.64\,V \times 26.5\,mA}{3.3\,V \times 183.646\,mA} \times 100 \approx 29.0\%$$

Overall

$$\eta = \frac{13.7\,V \times 23.0\,mA + 6.64\,V \times 26.5\,mA}{3.3\,V \times 183.646\,mA} \times 100 \approx 80.3\%$$

Efficiency B

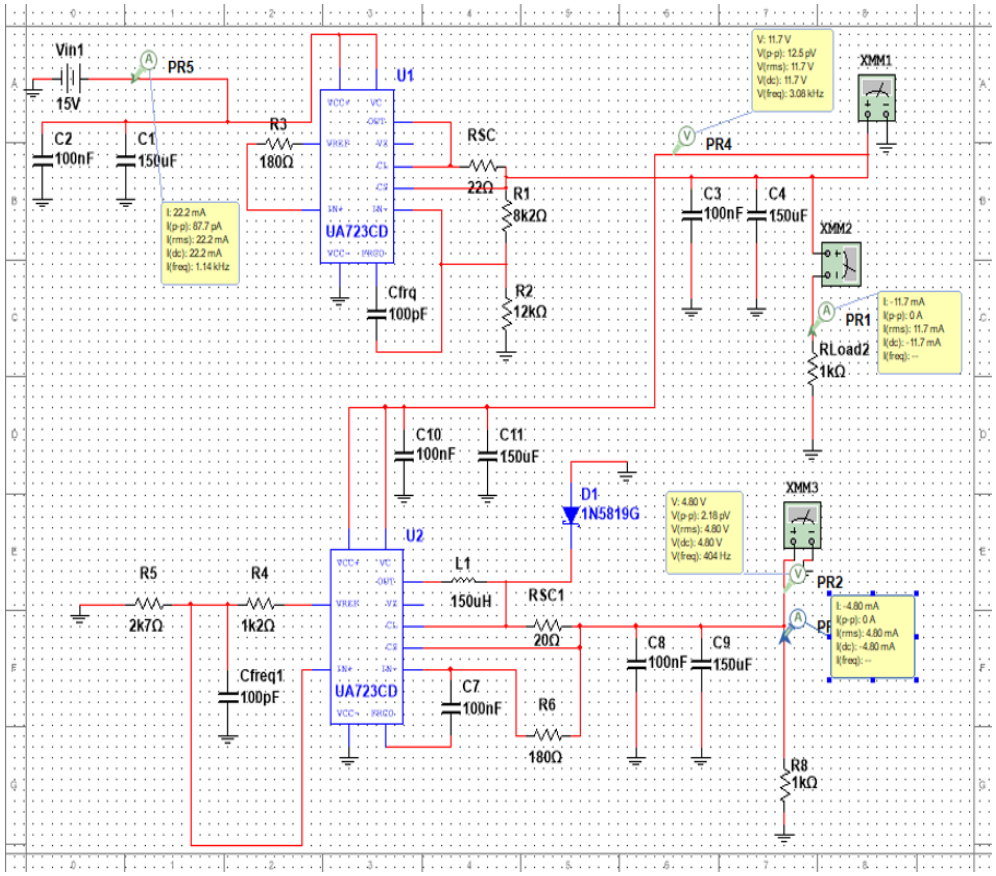

Efficiency Calculation

From 15V to 12V

$$\eta = \frac{11.7V \times 11.7mA}{15V \times 22.2mA} \times 100 \approx 40.11\%$$

From 12V to 5V

$$\eta = \frac{4.8V \times 4.8mA}{11.7V \times 11.7mA} \times 100 \approx 23.04\%$$

Overall

$$\eta = \frac{11.7V \times 11.7mA + 4.8V \times 4.8mA}{15V \times 22.2mA} \times 100 \approx 48\%$$

Output voltage vs. input voltage stability A

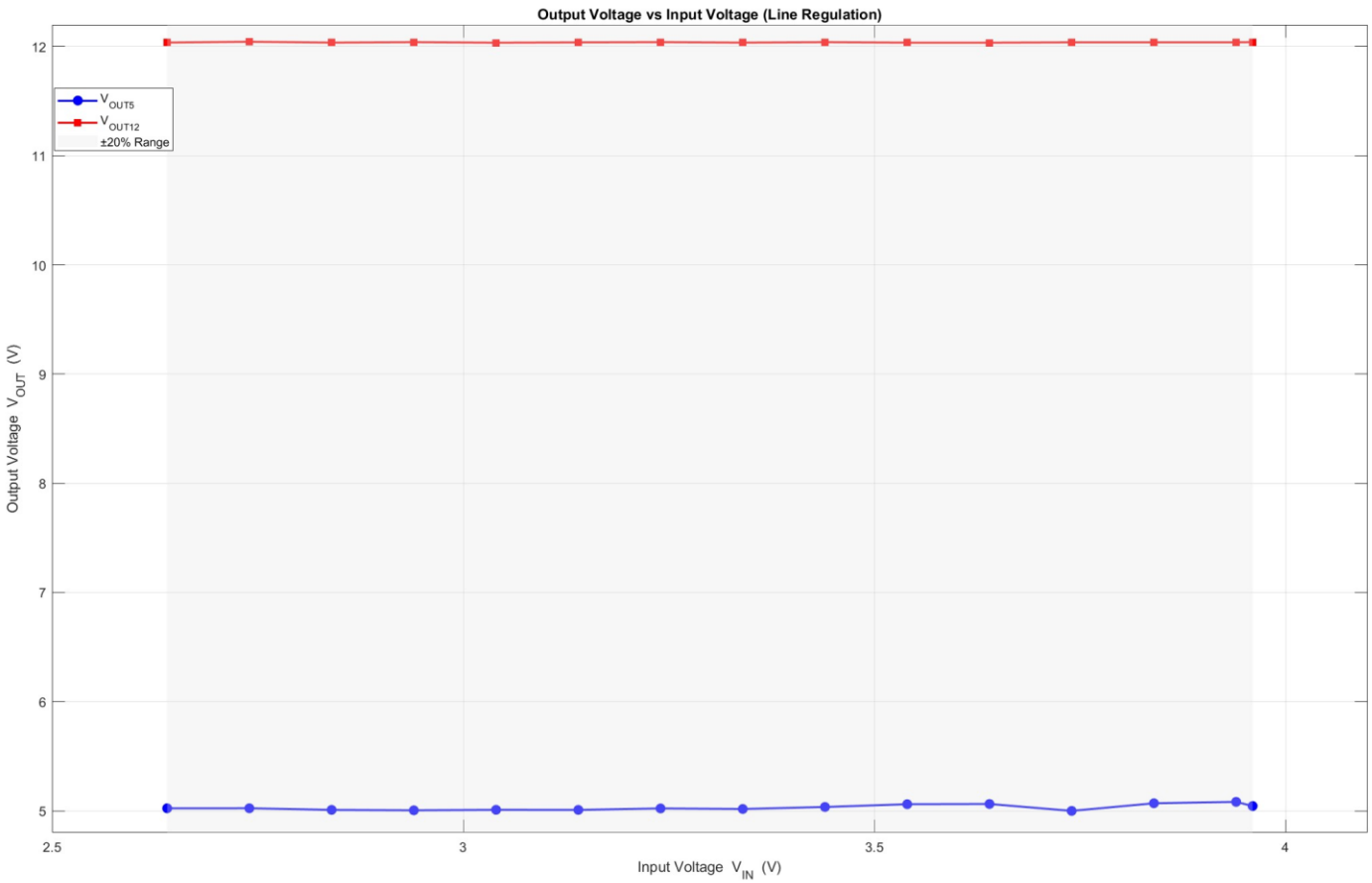

Output voltage vs Input voltage stability B

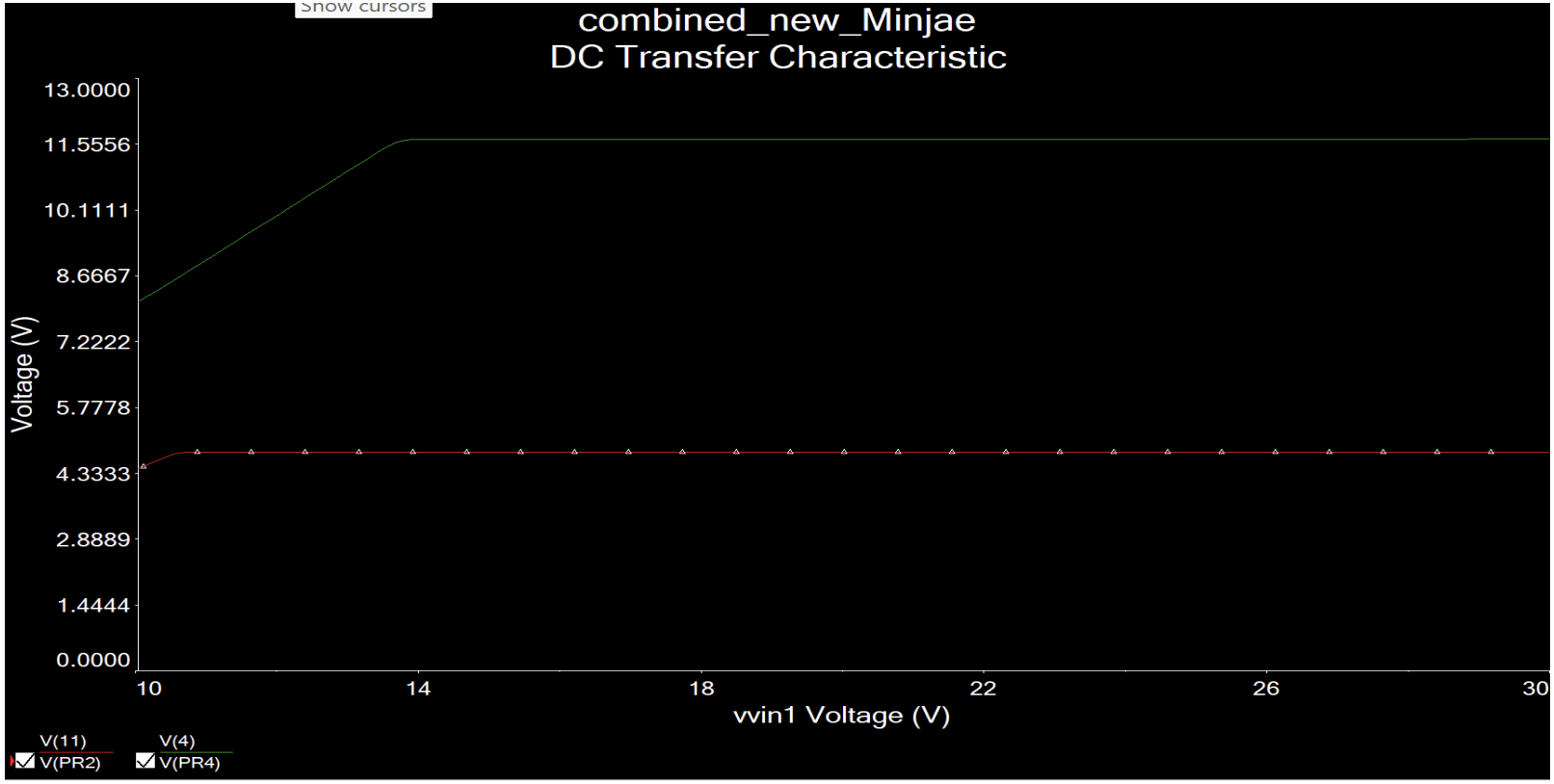

Requirements

Circuits Powered from the Digital Power Supply Subsystem

Circuit	Required Voltage (V)		Maximum Current (mA)
	Min	Max	
CPU	4.7	5.3	12
RAM	4.5	5.5	3
FLASH memory	11.2	12.8	20
Sensors	4.85	5.15	5

Output voltage ripple A

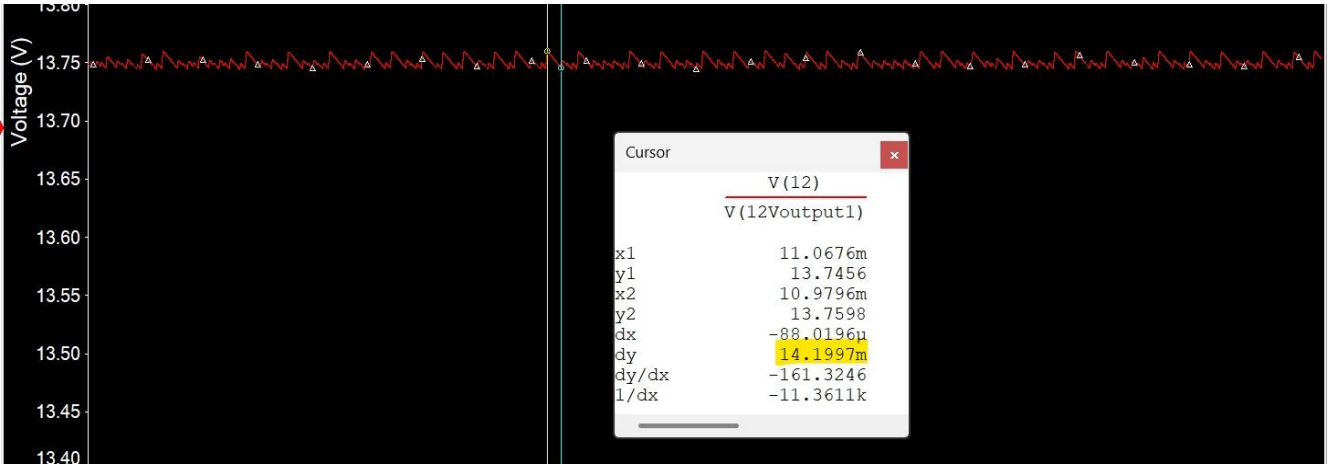

Ripple Voltage of the 12V Output is:

14.1997mV + 1.1612mV =**15.3609mV**

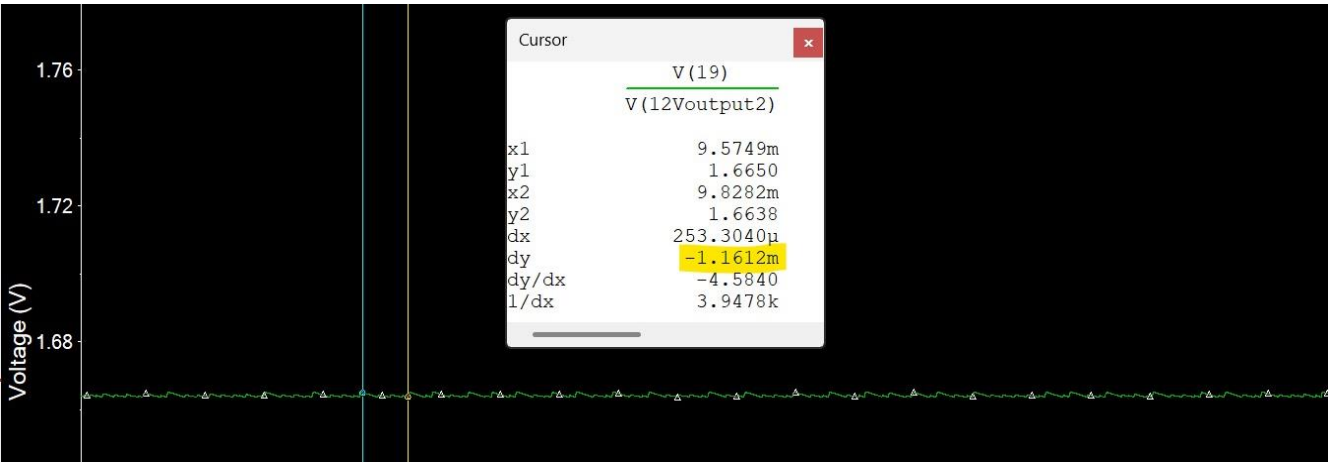

The ratio of ripple voltages to output: 15.3609mV/ 12V = 0.128%

Output voltage ripple A

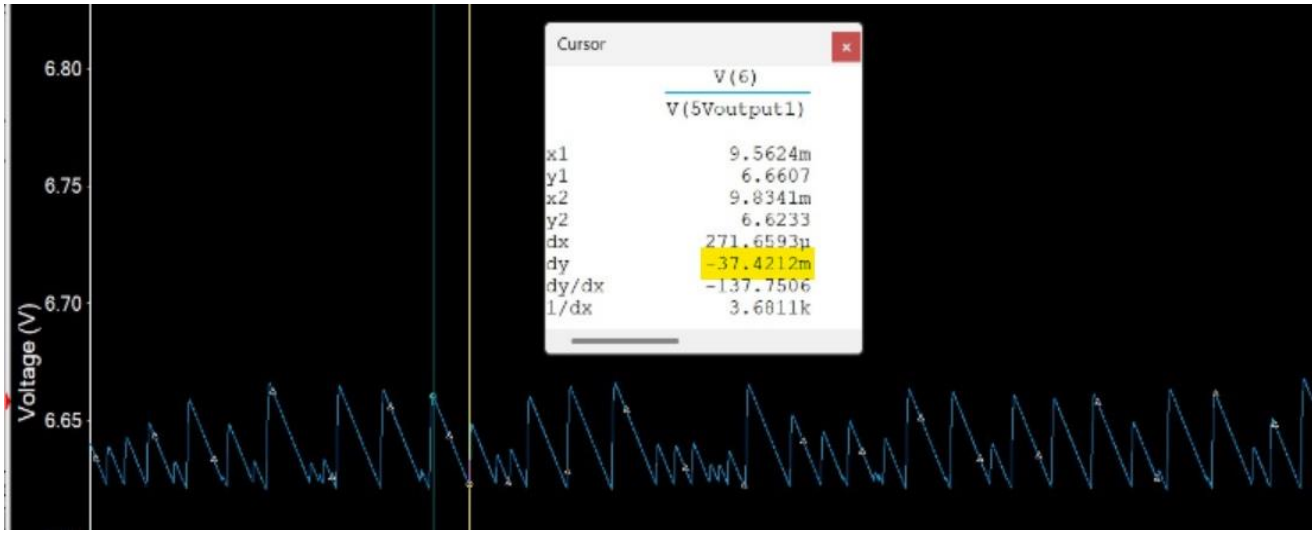

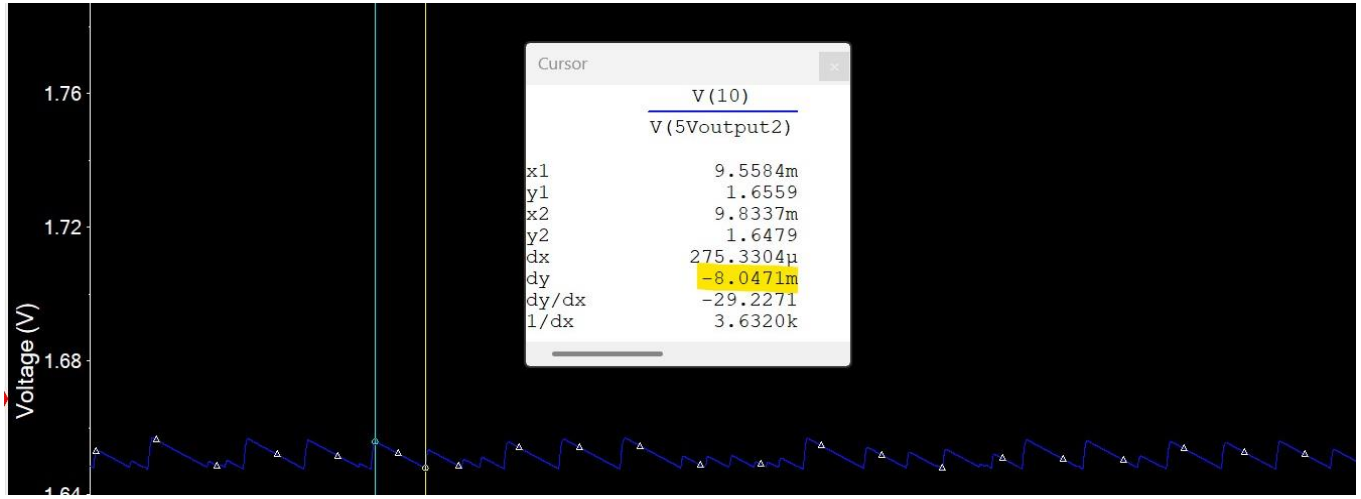

Ripple Voltage of the 5V Output is:

37.4212mV + 8.0471mV =**45.4683mV**

The ratio of ripple voltage to output: 45.4683mV / 5V= 0.909%

Output voltage ripple B

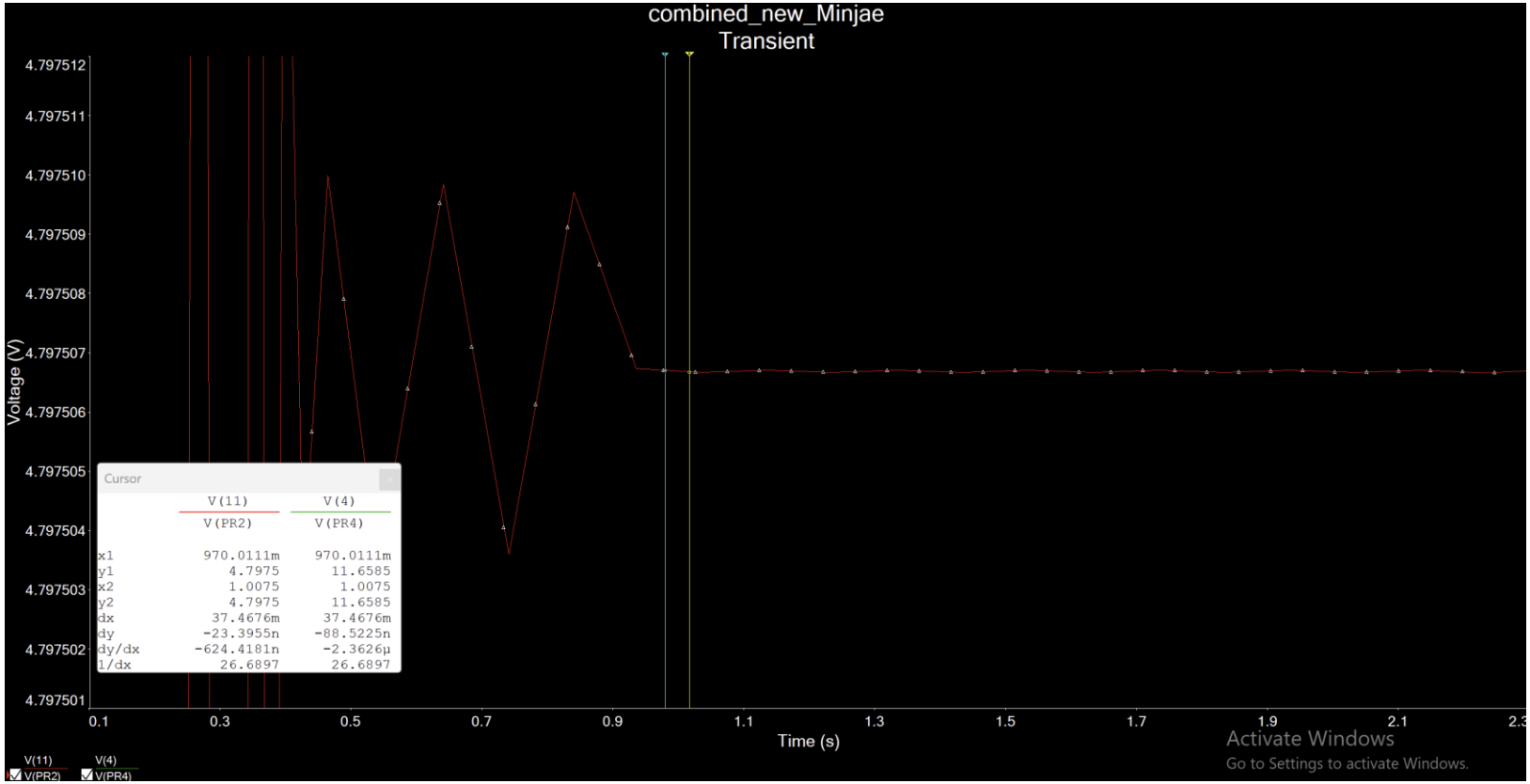

Short circuit current A with Current Limit Circuit

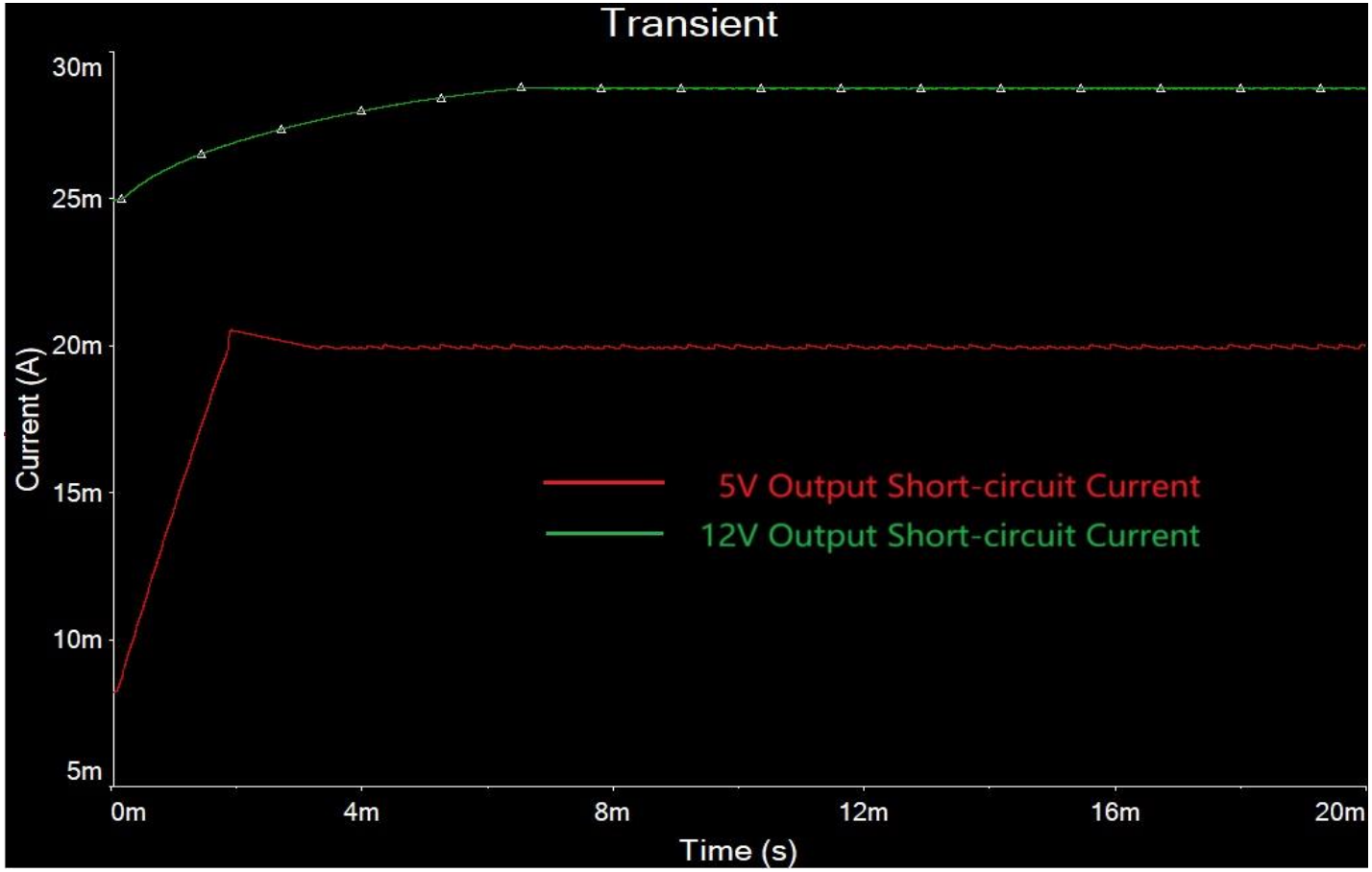

Short circuit current A with Current Limit Circuit

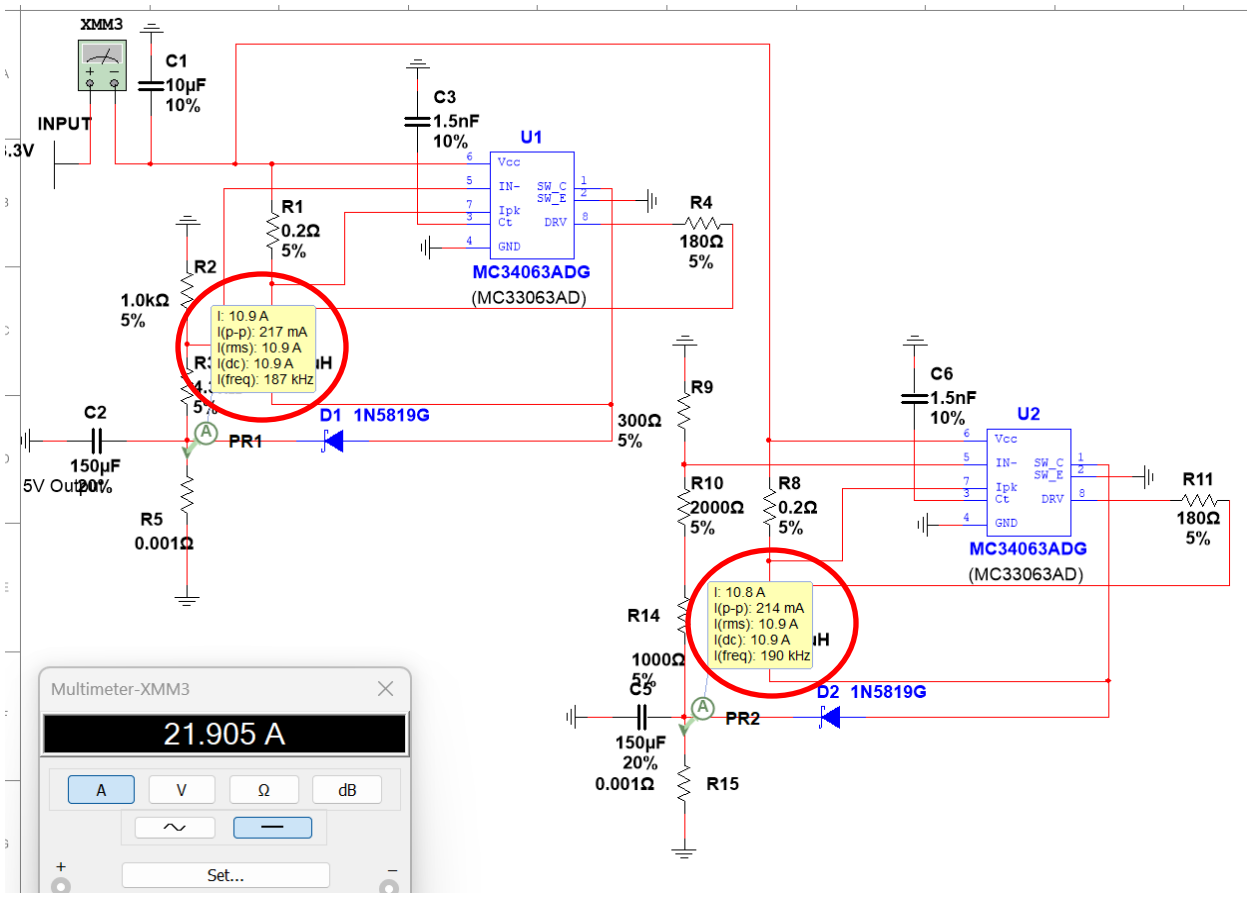

Short circuit current B

- **5V**

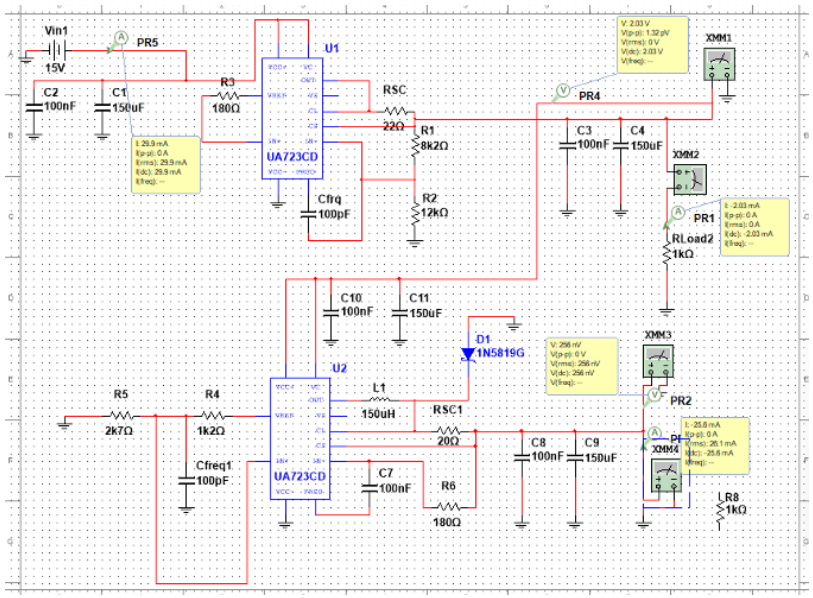

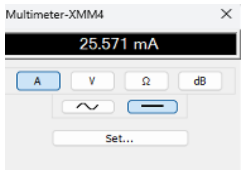

- **12V**

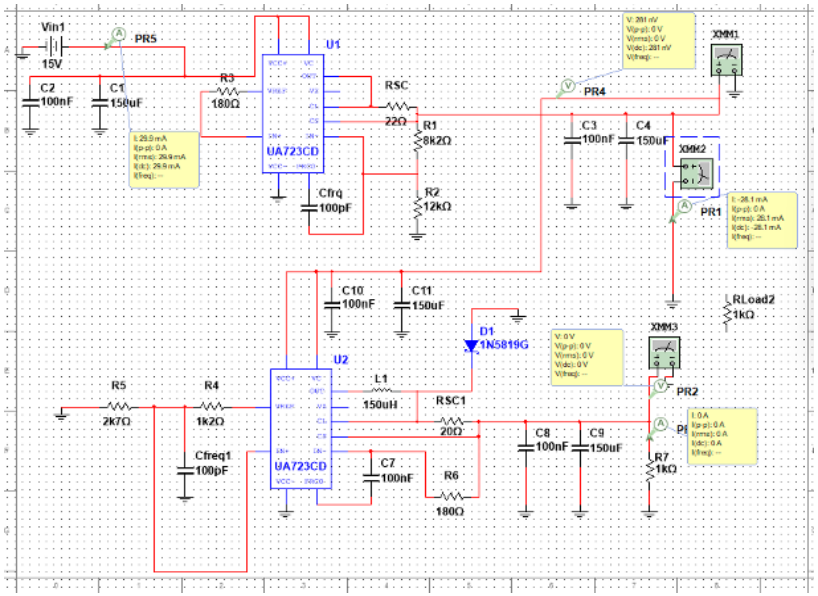

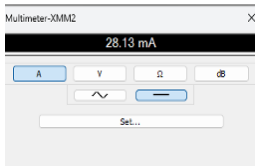

PCB Layout A

Front

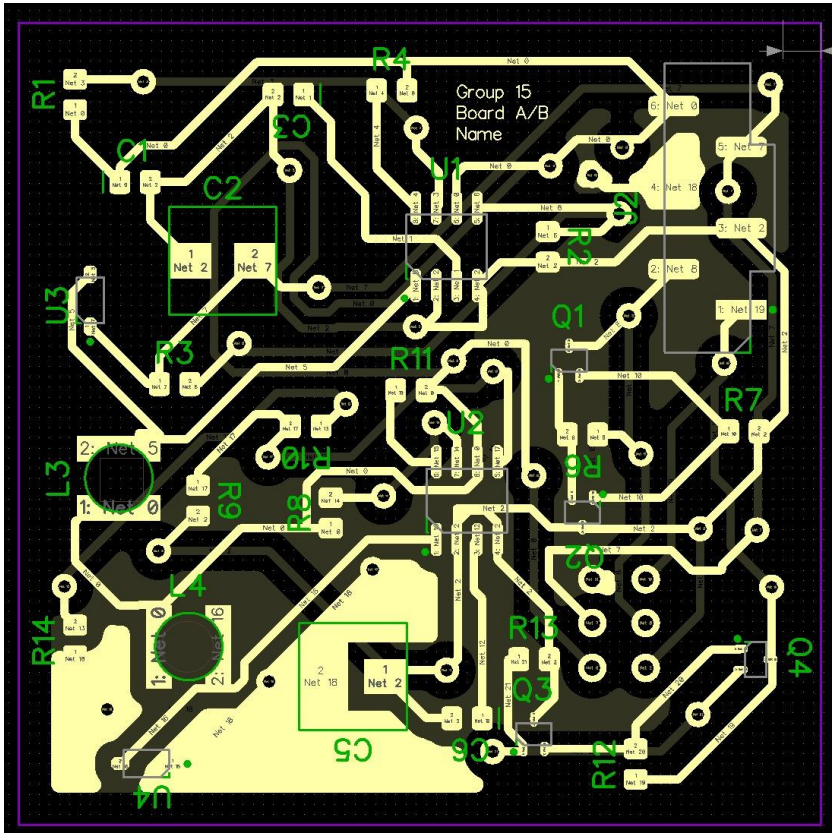

Back

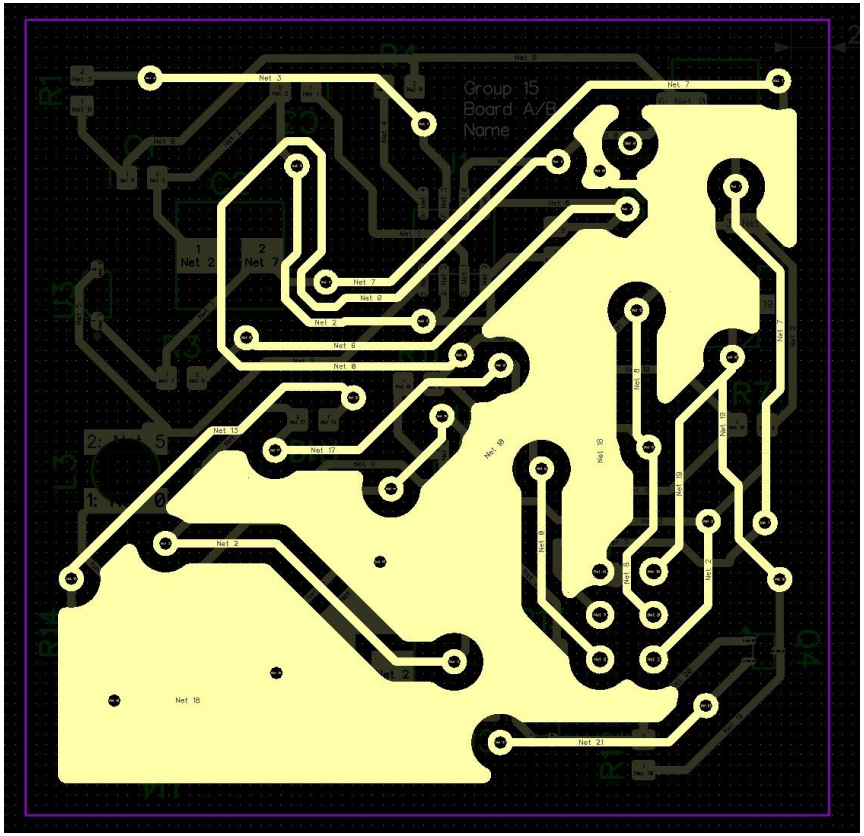

PCB Layout B

Front

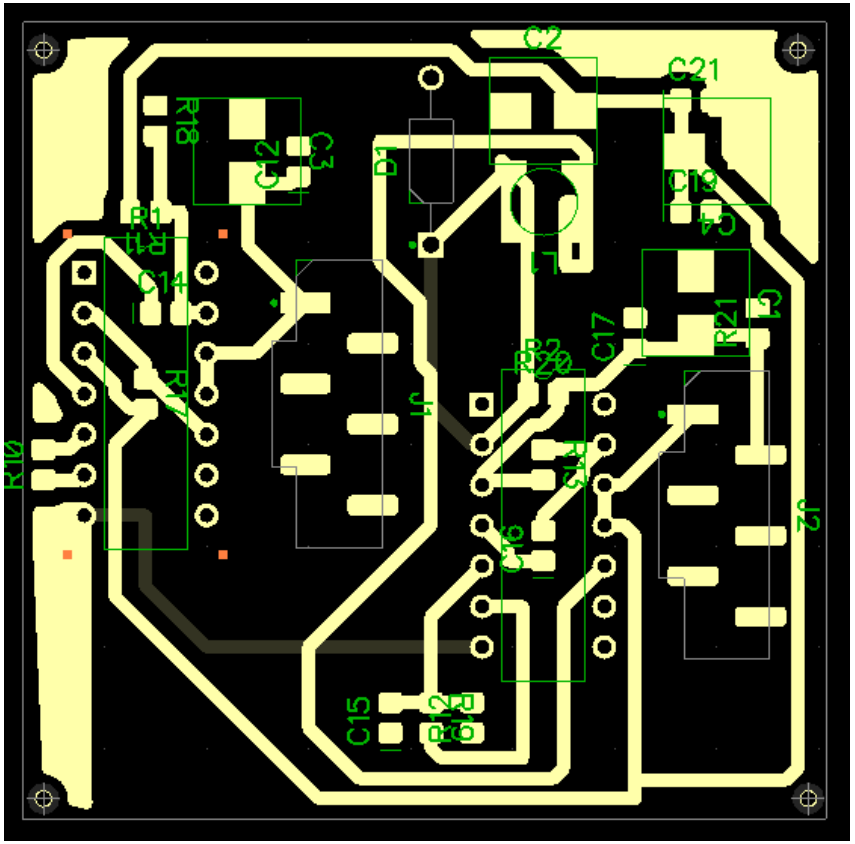
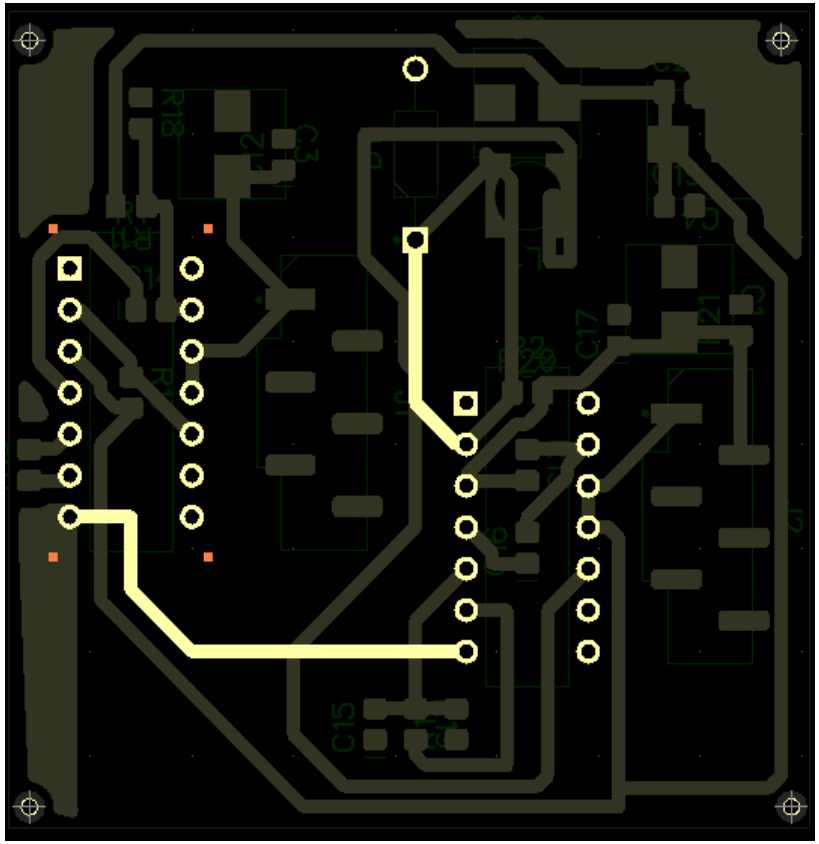
Back