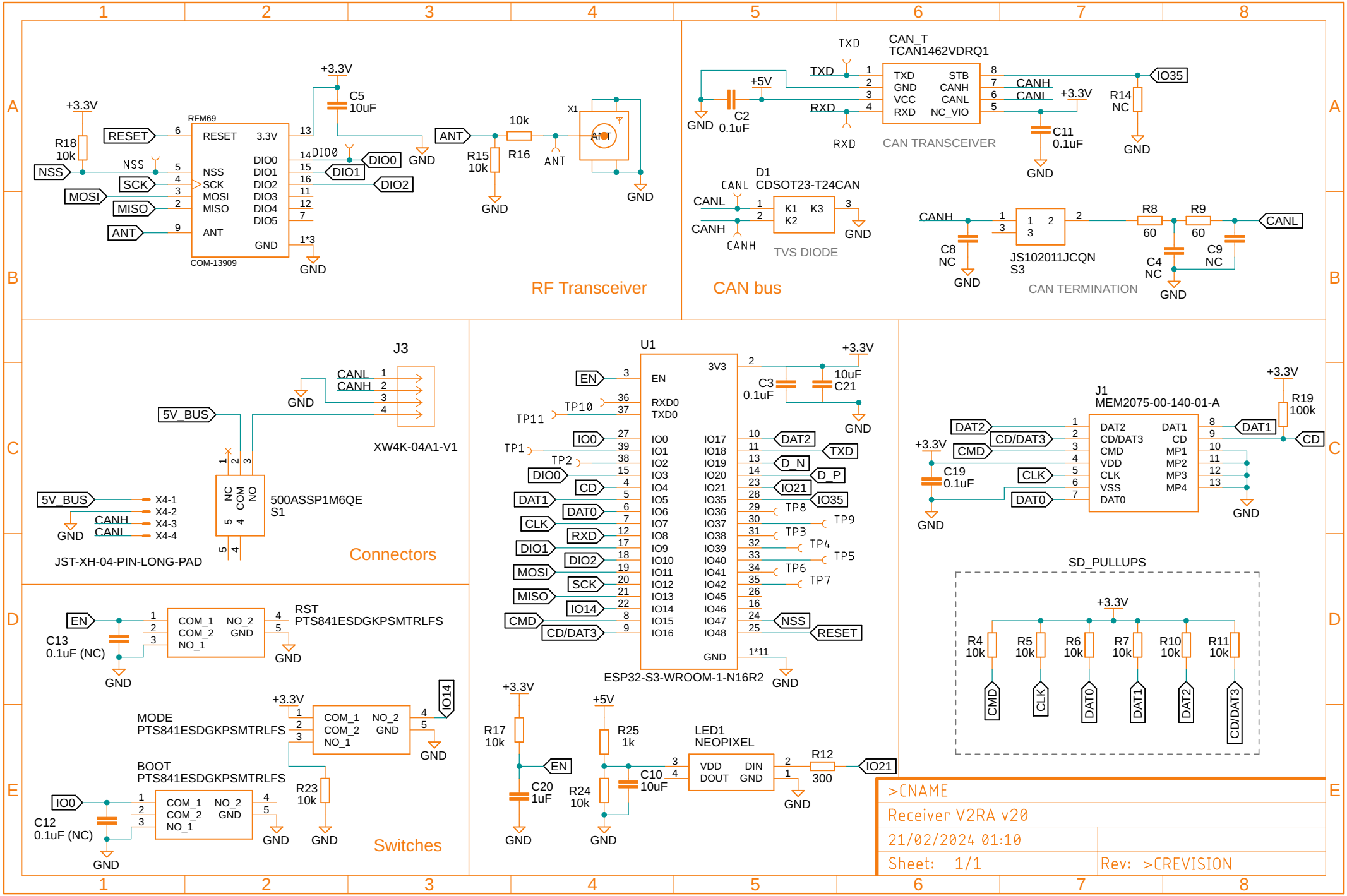
RF Transceiver
RFM69
COM-13909
RESET
NSS
SCK
MOSI
MISO
ANT
DIO0
DIO1
DIO2
DIO3
DIO4
DIO5
3.3V
GND
+3.3V
C5
10uF
R18
10k
R15
10k
R16
10k
X1
CAN bus
CAN_T
TCAN1462VDRQ1
TXD
RXD
STB
CANH
CANL
NC_VIO
CAN TRANSCEIVER
C2
0.1uF
+5V
IO35
R14
NC
C11
0.1uF
D1
CDSOT23-T24CAN
K1
K3
K2
TVS DIODE
CAN TERMINATION
JS102011JCQN
S3
C8
NC
C4
NC
C9
NC
R8
60
R9
60
Connectors
J3
XW4K-04A1-V1
5V_BUS
500ASSP1M6QE
S1
NC
COM
NO
X4-1
X4-2
X4-3
X4-4
JST-XH-04-PIN-LONG-PAD
U1
ESP32-S3-WROOM-1-N16R2
EN
3V3
RXD0
TXD0
IO0
IO14
IO21
IO35
D_N
D_P
DAT1
DAT0
CLK
RXD
CMD
CD/DAT3
RESET
TP1
TP2
TP3
TP4
TP5
TP6
TP7
TP8
TP9
TP10
TP11
C3
0.1uF
C21
10uF
J1
MEM2075-00-140-01-A
DAT2
CD/DAT3
CMD
VDD
CLK
VSS
DAT0
DAT1
CD
MP1
MP2
MP3
MP4
R19
100k
C19
0.1uF
SD_PULLUPS
R4
10k
R5
10k
R6
10k
R7
10k
R10
10k
R11
10k
Switches
COM_1
COM_2
NO_1
NO_2
GND
RST
PTS841ESDGKPSMTRLFS
C13
0.1uF (NC)
MODE
PTS841ESDGKPSMTRLFS
BOOT
PTS841ESDGKPSMTRLFS
C12
0.1uF (NC)
R23
10k
R17
10k
C20
1uF
R25
1k
R24
10k
C10
10uF
LED1
NEOPIXEL
VDD
DIN
DOUT
R12
300
>CNAME
Receiver V2RA v20
21/02/2024 01:10
Sheet: 1/1
Rev: >CREVISION

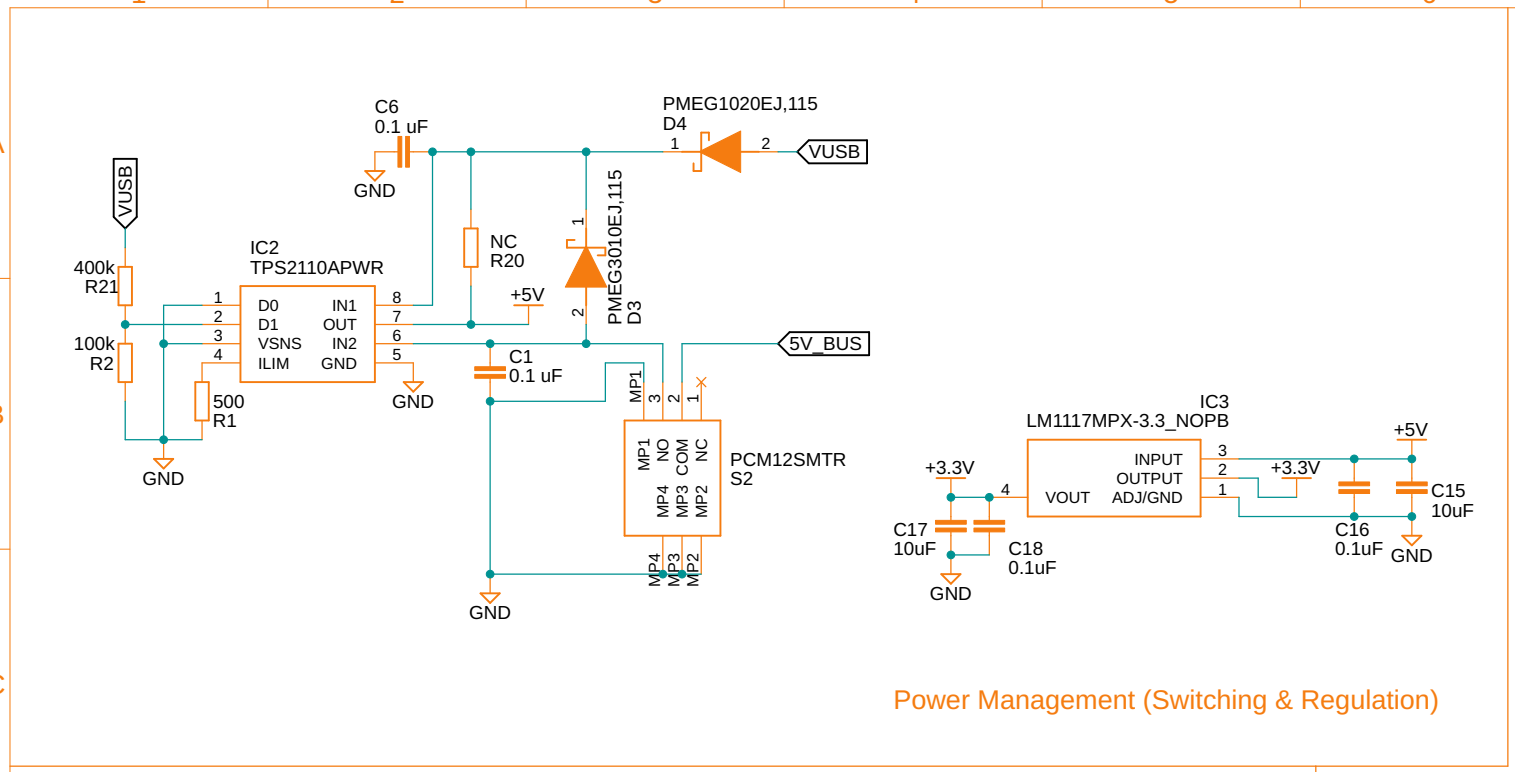

Power Management (Switching & Regulation)

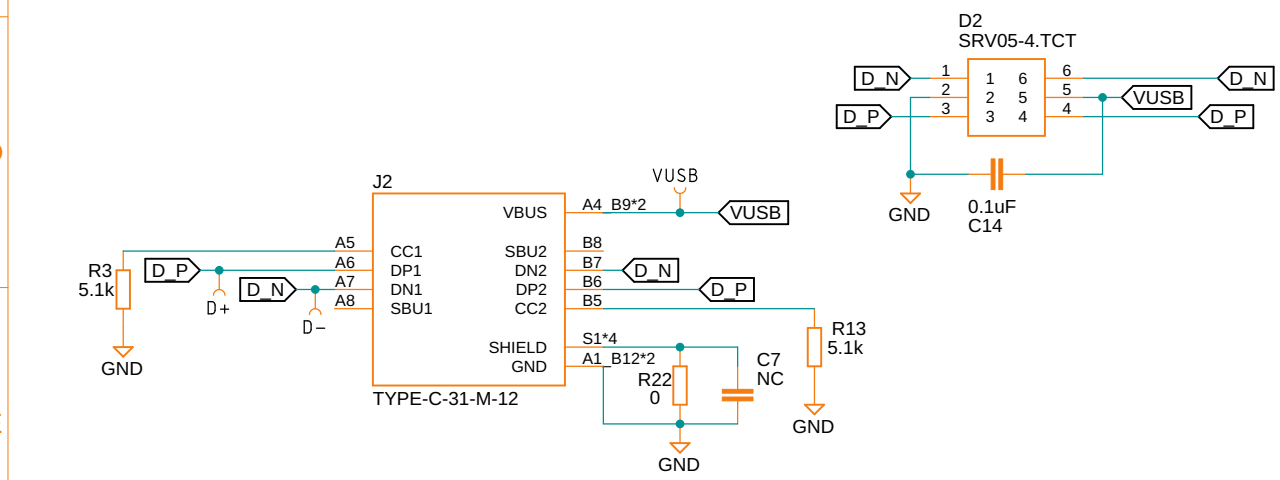

USB-C Connector and TVS Diode

>CNAME	
Receiver V2RA v20	
21/02/2024 01:10	
Sheet: 1/1	Rev: >CREVISION