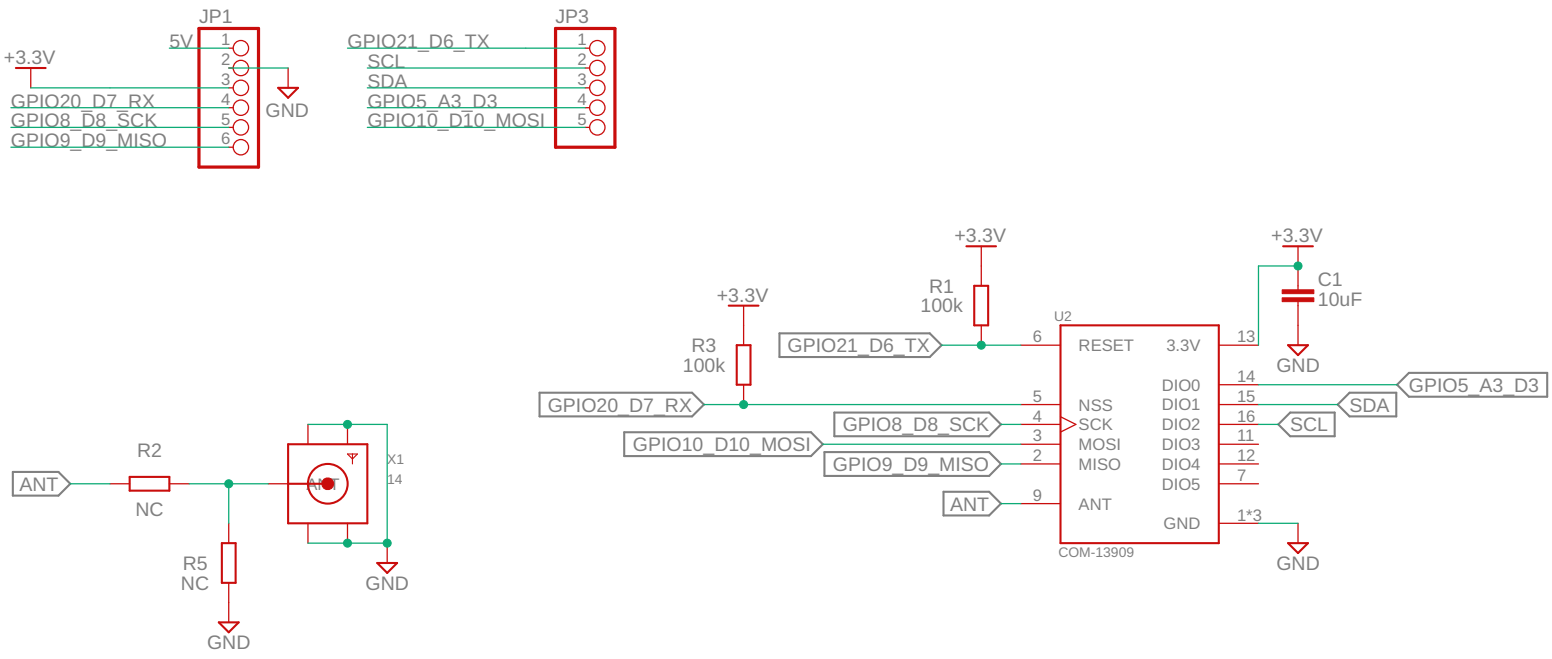

>CNAME	
RFM69HCW Shield v2	
17/09/2024 13:06	
Sheet: 1/1	Rev: >CREVISION