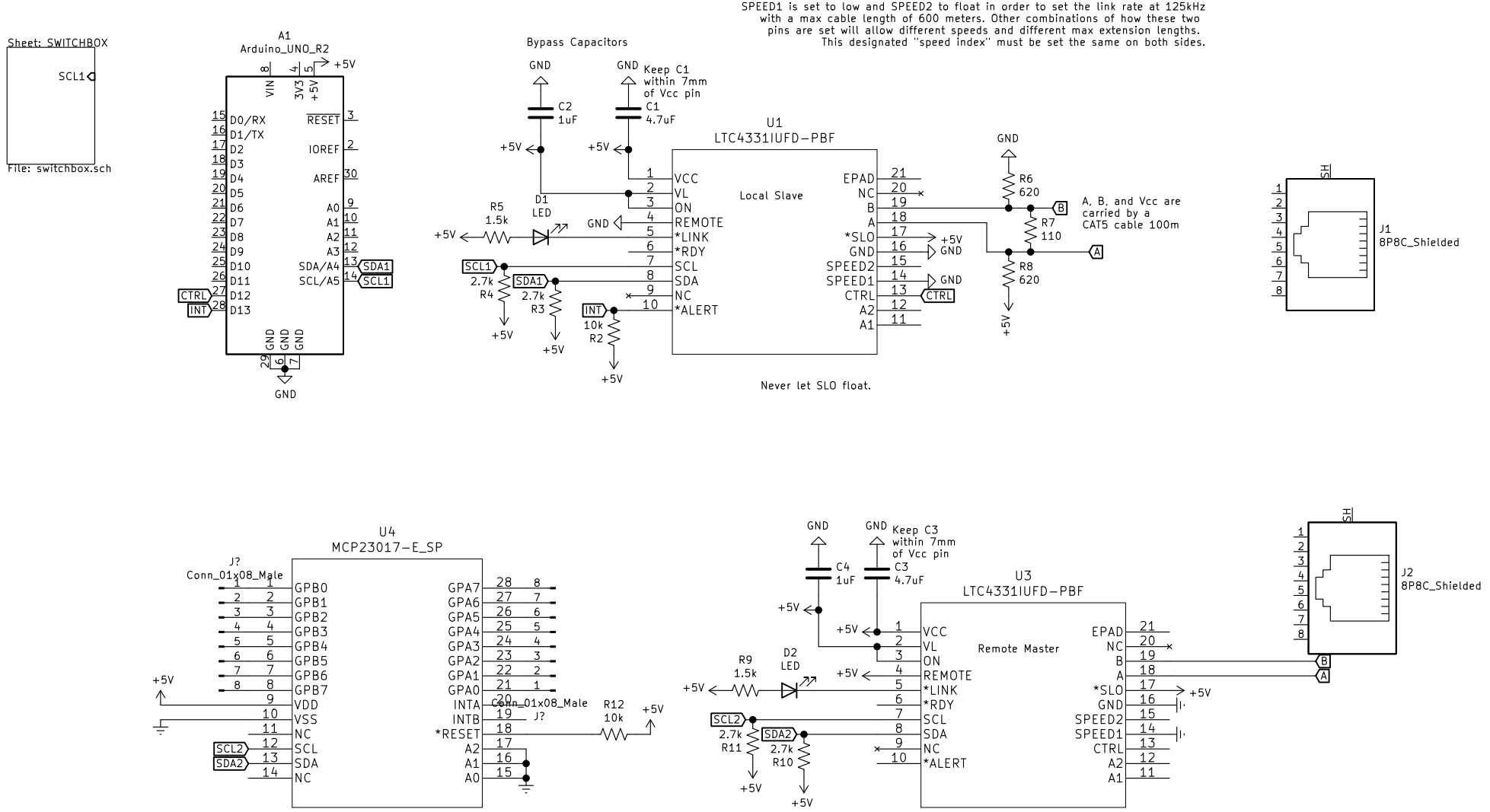

Sheet: /
File: ControlsPCB.sch

Title:

Size: A4	Date:	Rev:
KiCad E.D.A. kicad (5.1.6)-1		Id: 1/2

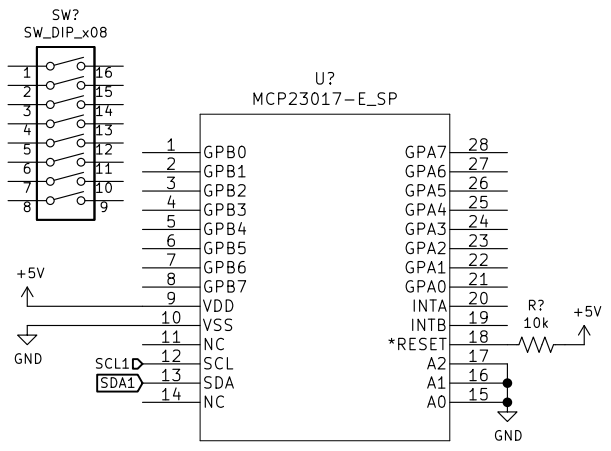

Sheet: /SWITCHBOX/
File: switchbox.sch

Title:

Size: A4	Date:	**Rev:**
KiCad E.D.A. kicad (5.1.6)-1		Id: 2/2