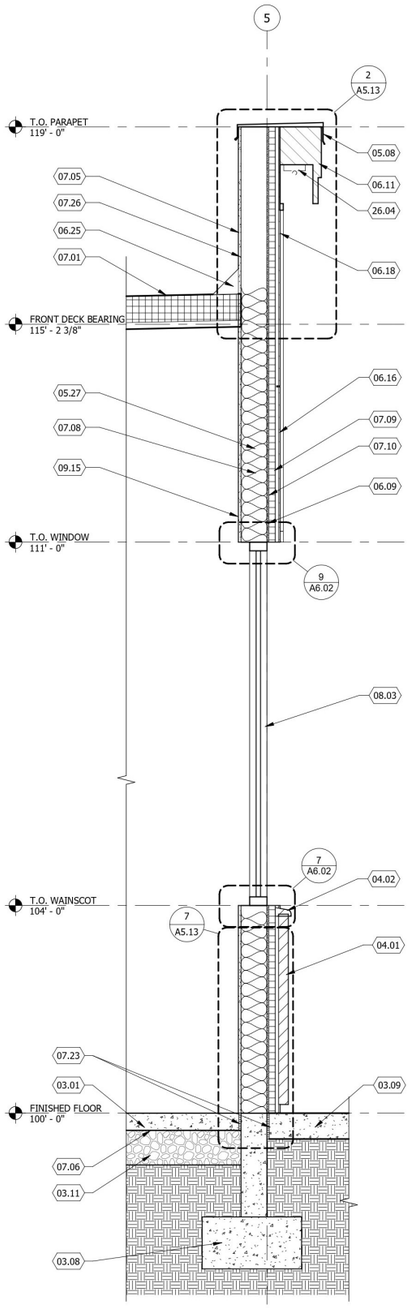

3 WALL SECTION B.5
SCALE: 3/4" = 1'-0"

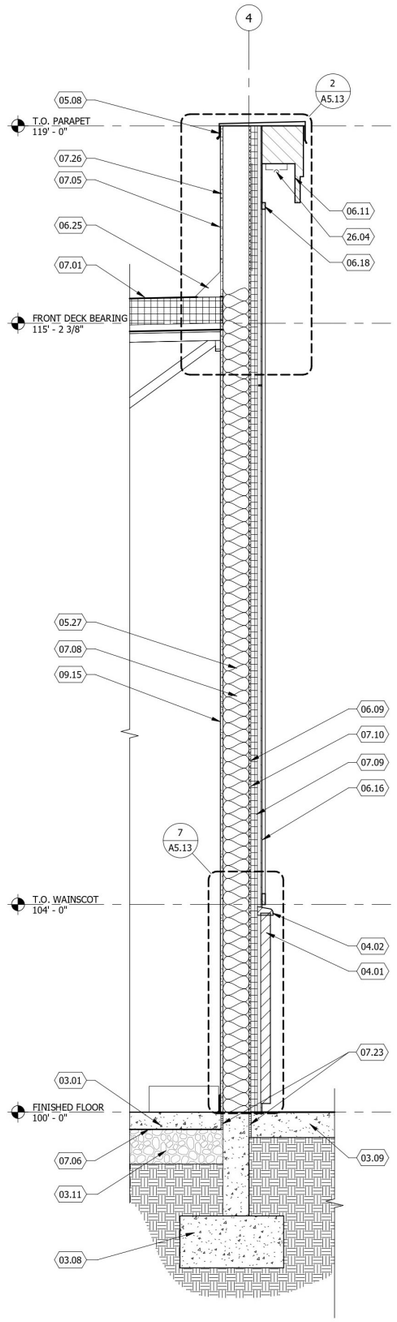

2 WALL SECTION
SCALE: 3/4" = 1'-0"

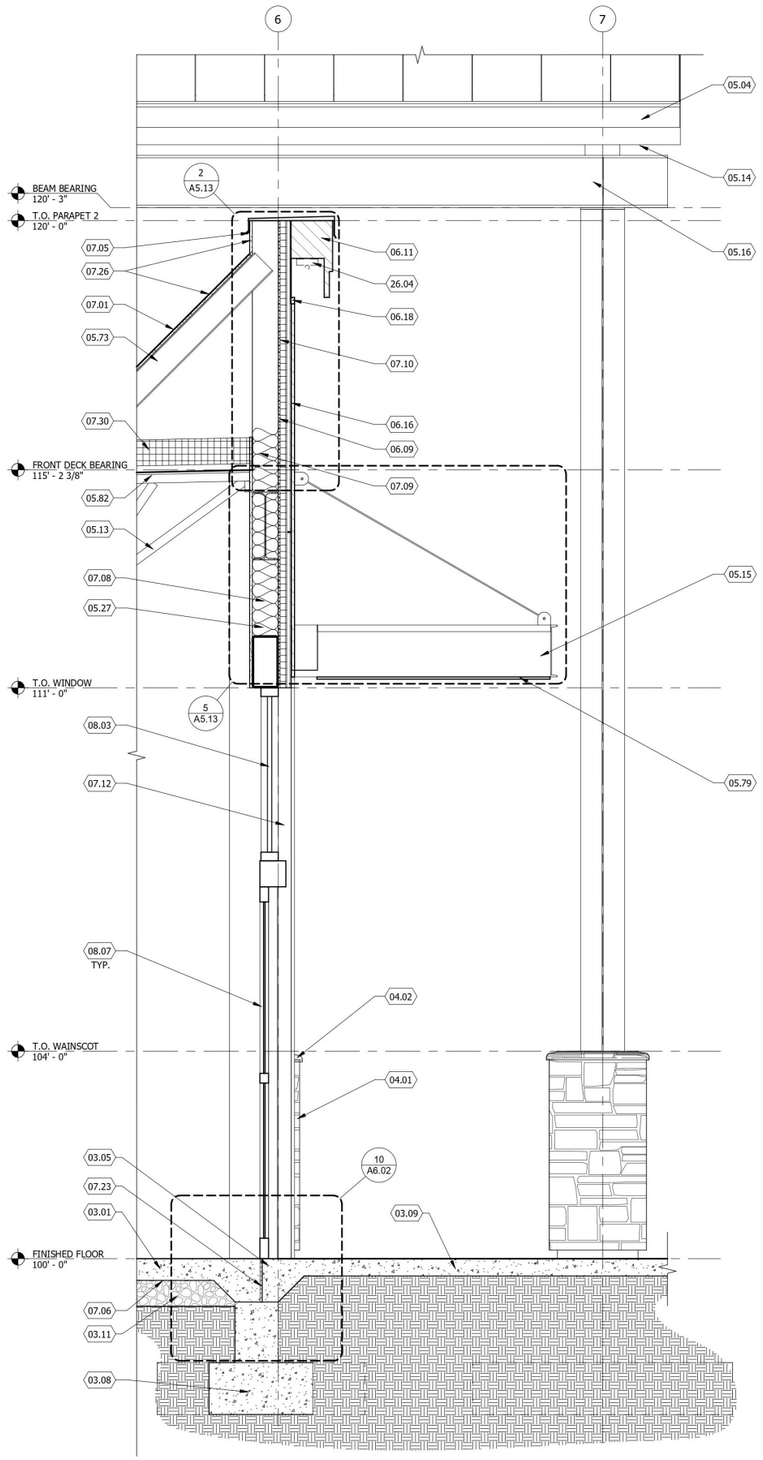

1 WALL SECTION
SCALE: 3/4" = 1'-0"

KEYED NOTES

03.01	REINFORCED CONCRETE FLOOR SLAB, SEE STRUCTURAL
03.05	BLOCK OUT FOR DOOR OPENING, THICKENED SLAB SHALL RUN OVER FOUNDATION WALL, SEE STRUCTURAL DRAWINGS
03.08	CONCRETE FOOTINGS AND FOUNDATIONS, SEE STRUCTURAL DRAWINGS
03.09	CONCRETE SIDEWALK, SLOPE AWAY FROM BUILDING 1:48 MAX. SEE CIVIL DRAWINGS
03.11	GRANULAR BASE, SEE STRUCTURAL
04.01	STONE VENEER (BR-1), SEE SCHEDULE ON SHEET A6.03. INSTALL PER MANUFACTURER'S GUIDELINES
04.02	STONE VENEER SILL CAP (BR-2)
05.04	PRE-FINISHED GUTTER, COLOR C-2, SEE SCHEDULE ON SHEET A6.03
05.08	24 GAUGE PRE-FINISHED COPING SECURED TO 24 GAUGE PRE-FINISHED CONTINUOUS CONCEALED CLEAT ON OUTSIDE OF PARAPET. FASTEN CLEAT ON OUTSIDE OF PARAPET W/ GALVANIZED ROOFING NAIL AT 6" O.C. FASTEN INSIDE LEG OF COPING TO PARAPET W/ NEOPRENE GASKETED FASTENERS.
05.13	ROOF JOIST, PAINTED P-7 IN RETAIL AREA. SEE STRUCTURAL
05.14	METAL DECK, SEE STRUCTURAL. PAINTED P-9 SEE SCHEDULE ON SHEET A6.03
05.15	STEEL AWNING, PAINTED P-9, SEE DETAILS, SEE SCHEDULE ON SHEET A6.03, AND STRUCTURAL DETAILS ON SHEET S6.01
05.16	STEEL COLUMNS, BEAMS, AND CONNECTIONS PAINTED P-9, SEE SCHEDULE ON SHEET A6.03. SEE STRUCTURAL DRAWINGS FOR DETAILING
05.27	METAL STUD WALL, SEE STRUCTURAL
05.73	METAL STUD KICKER. SEE STRUCTURAL DRAWINGS
05.79	3/4" METAL SOFFIT, COMMERCIAL GRADE. COLOR: PAINTED BLACK FOX SW 7020
05.82	METAL DECK, SEE SCHEDULE FOR FINISH COLOR
06.09	WALL SHEATHING, SEE STRUCTURAL
06.11	STACKED FIBER CEMENT TRIM BOARDS, BB-3
06.16	FIBER CEMENT BOARD AND BATTEN SIDING, SEE ELEVATIONS. INSTALL PER MANUFACTURER'S GUIDELINES
06.18	FIBER CEMENT TRIM, SEE ELEVATIONS
06.25	CANT STRIP, TREATED WOOD
07.01	SINGLE-PLY ROOFING MEMBRANE OVER 5" (MIN) POLYISOCYANURATE INSULATION, OVERLAP JOINTS, SEE SPECIFICATIONS AND COMCHECK CALCS
07.05	WRAP ROOF MEMBRANE UP WALL AND UNDER ROOF CAP
07.06	VAPOR BARRIER ABOVE GRANULAR FILL, BELOW CONCRETE SLAB, SEE SPECIFICATIONS
07.08	R-19 BATT INSULATION
07.09	R-7.5 CONTINUOUS RIGID INSULATION
07.10	AIR INFILTRATION BARRIER, OVER SHEATHING, SEE SPECIFICATIONS
07.12	CONTINUOUS ELASTOMERIC SEALANT AROUND STOREFRONT SYSTEM (BOTH SIDES) W/ BACKER ROD (SEL-2)
07.23	1/2" FIBER BOARD THERMAL BREAK (R-1.3)
07.26	5/8" DENSDECK OR OSB SHEATHING
07.30	5" (MIN) POLYISOCYANURATE INSULATION, OVERLAP JOINTS, SEE SPECIFICATIONS AND COMCHECK CALC
08.03	ALUMINUM STOREFRONT SYSTEM (AST-1), SEE SCHEDULE ON SHEET A6.03
08.07	DOOR, SEE SCHEDULE
09.15	5/8" GYPSUM WALL BOARD, PAINT COLOR PER ROOM FINISH SCHEDULE
26.04	LIGHT FIXTURE, SEE ELECTRICAL PLANS

GENERAL NOTES

1. SEE STRUCTURAL PLANS FOR JOIST LOCATIONS AND DIRECTION.
2. SEE FINISH SCHEDULE AND WALL TYPES FOR COMPLETE WALL CONSTRUCTION AND FINISHES.

Project Name

Client Name

WALL DETAILS

Project Number	
Issue Date	
Author	
Checker	

A 204