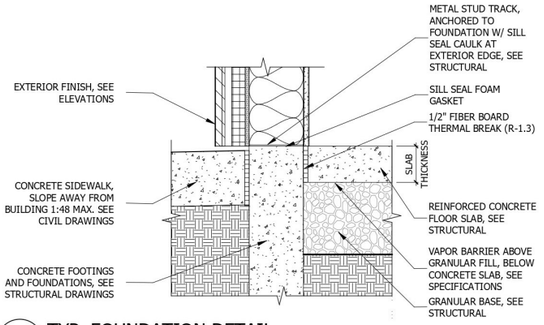

8 TYP. FOUNDATION DETAIL

SCALE: 1 1/2" = 1'-0"

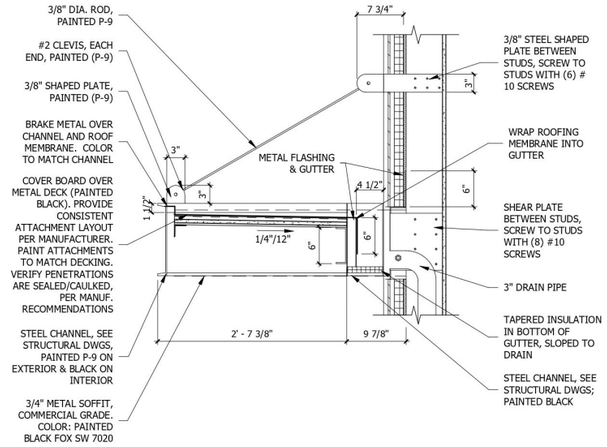

6 AWNING SECTION AT SIDE

SCALE: 1" = 1'-0"

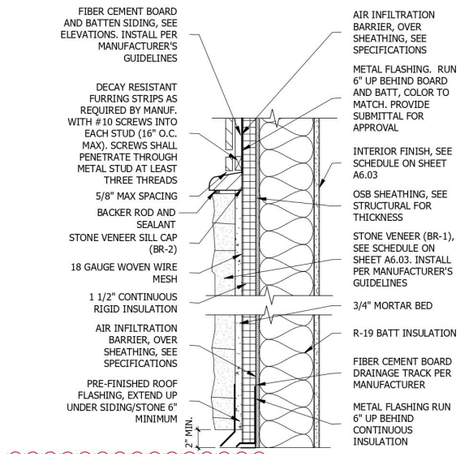

7 STONE WAINSCOTT

SCALE: 1 1/2" = 1'-0"

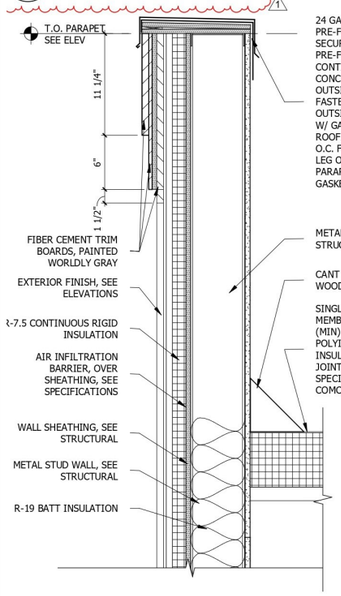

4 CORNICE DETAIL

SCALE: 1 1/2" = 1'-0"

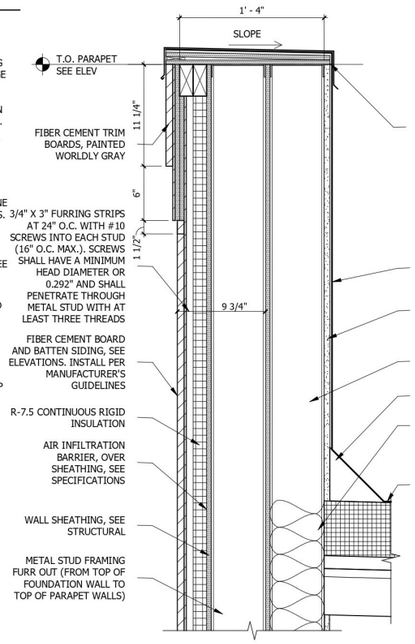

3 COLUMN CORNICE DETAIL

SCALE: 1 1/2" = 1'-0"

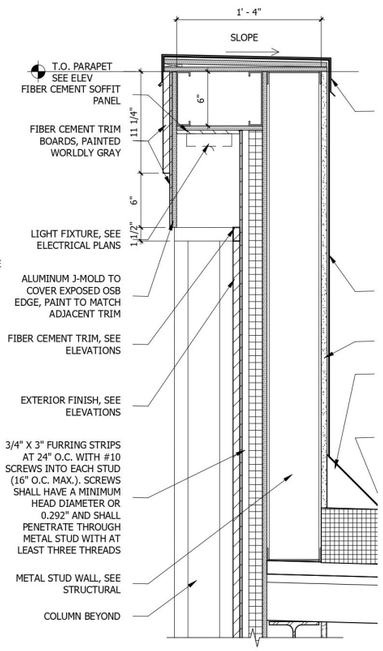

2 CORNICE DETAIL W/ LIGHT

SCALE: 1 1/2" = 1'-0"

Project Name

Client Name

PARAPET DETAILS

Project Number	
Issue Date	
Author	
Checker	

A 206