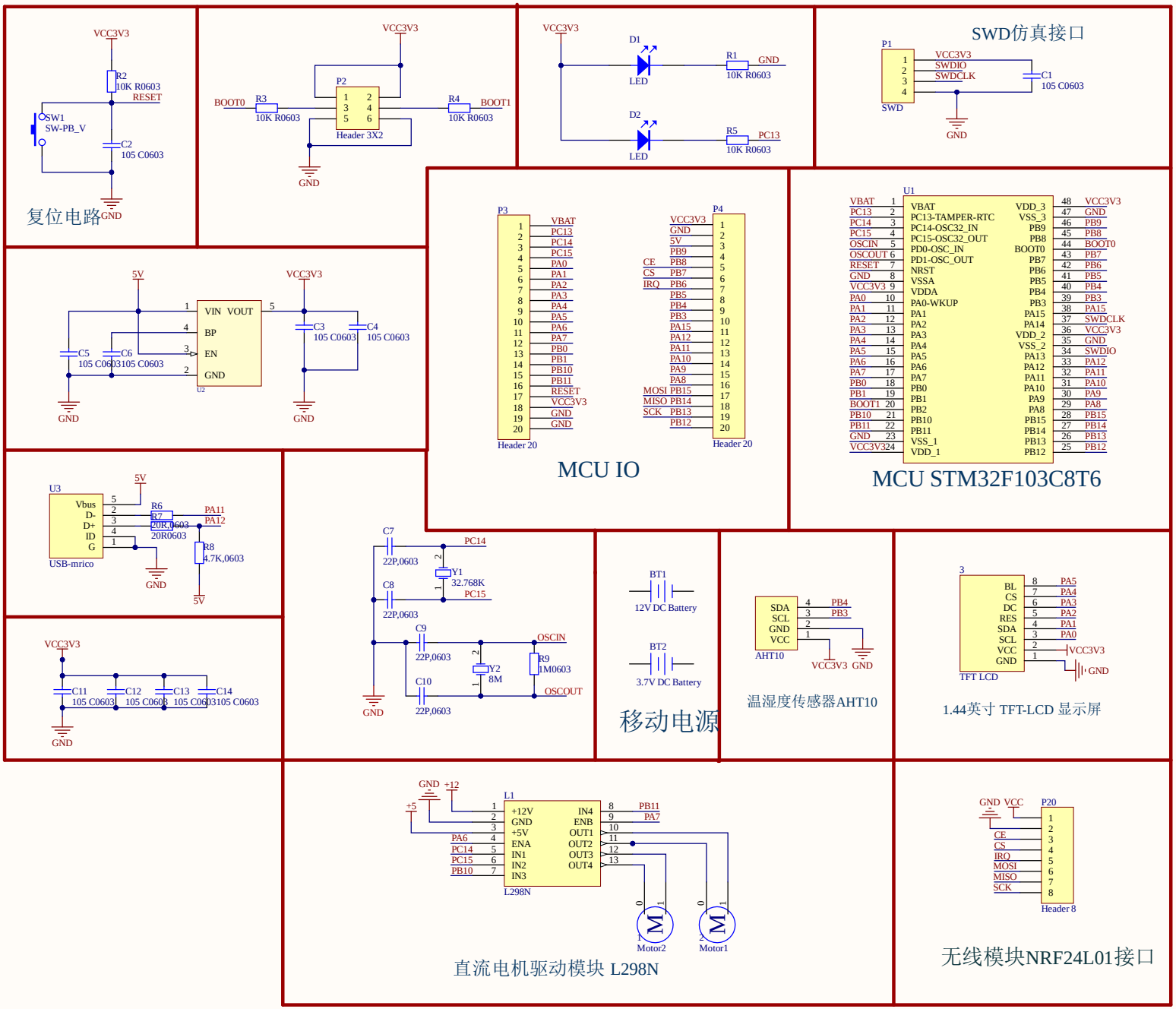
复位电路
VCC3V3
R2
10K R0603
RESET
SW1
SW-PB_V
C2
105 C0603
GND
BOOT0
R3
10K R0603
P2
Header 3X2
R4
10K R0603
BOOT1
D1
LED
R1
10K R0603
D2
LED
R5
10K R0603
PC13
SWD仿真接口
P1
SWD
VCC3V3
SWDIO
SWDCLK
C1
105 C0603
5V
VIN VOUT
BP
EN
GND
U2
C3
105 C0603
C4
105 C0603
C5
105 C0603
C6
105 C0603
P3
Header 20
P4
Header 20
MCU IO
U1
MCU STM32F103C8T6
U3
USB-mrico
Vbus
D-
D+
ID
G
R6
20R0603
R7
20R0603
PA11
PA12
R8
4.7K,0603
C7
22P,0603
C8
22P,0603
PC14
PC15
Y1
32.768K
C9
22P,0603
C10
22P,0603
Y2
8M
R9
1M0603
OSCIN
OSCOUT
BT1
12V DC Battery
BT2
3.7V DC Battery
移动电源
SDA
SCL
GND
VCC
AHT10
温湿度传感器AHT10
TFT LCD
BL
CS
DC
RES
SDA
SCL
VCC
GND
1.44英寸 TFT-LCD 显示屏
C11
105 C0603
C12
105 C0603
C13
105 C0603
C14
105 C0603
L1
L298N
+12V
GND
+5V
ENA
IN1
IN2
IN3
IN4
ENB
OUT1
OUT2
OUT3
OUT4
+12
+5
PA6
PC14
PC15
PB10
PB11
PA7
Motor2
Motor1
直流电机驱动模块 L298N
P20
Header 8
CE
CS
IRQ
MOSI
MISO
SCK
无线模块NRF24L01接口