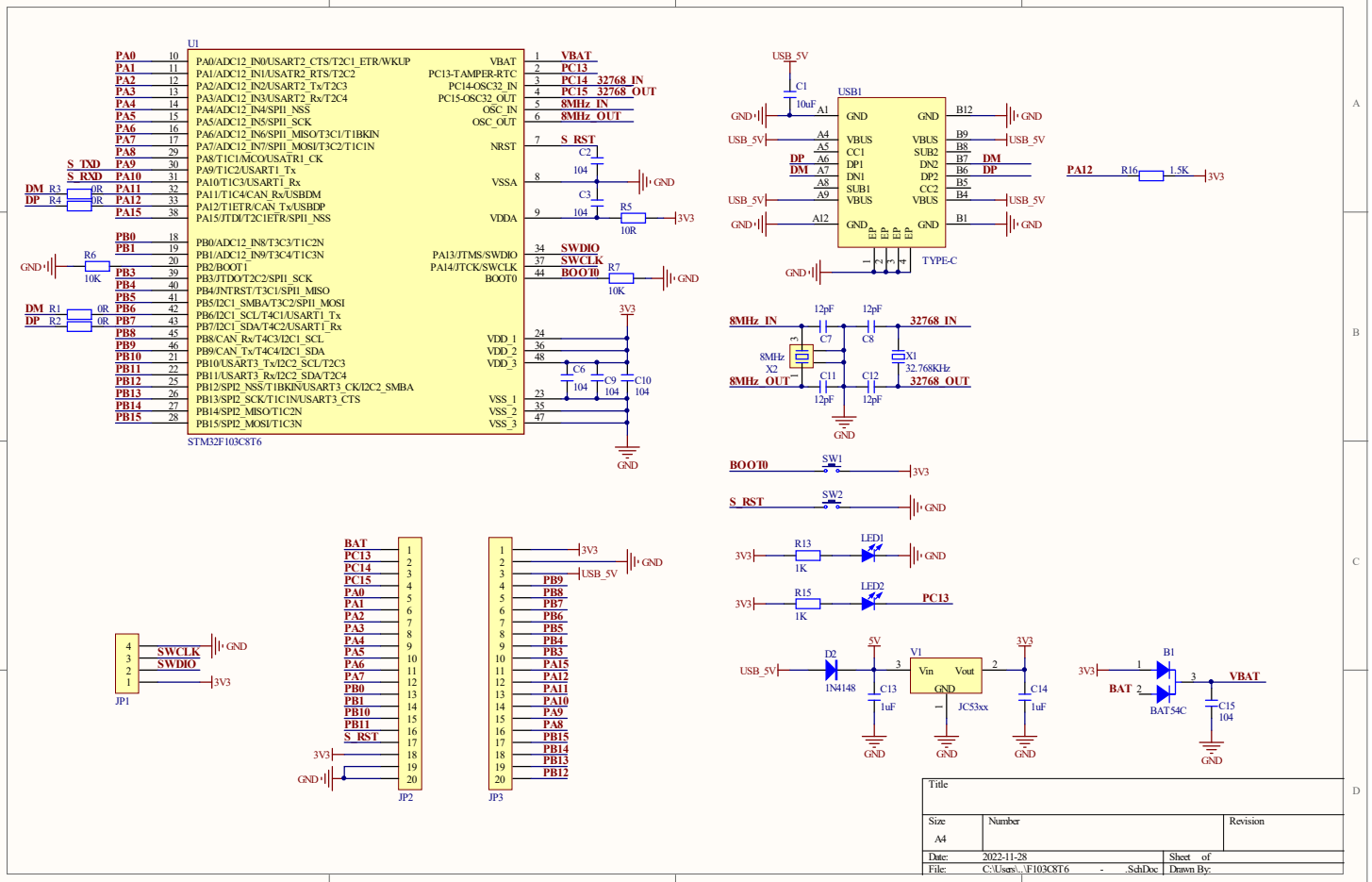

Title

Size	Number	Revision
A4		

Date: 2022-11-28 Sheet of

File: C:\Users\...\F103C8T6 - .SchDoc Drawn By: