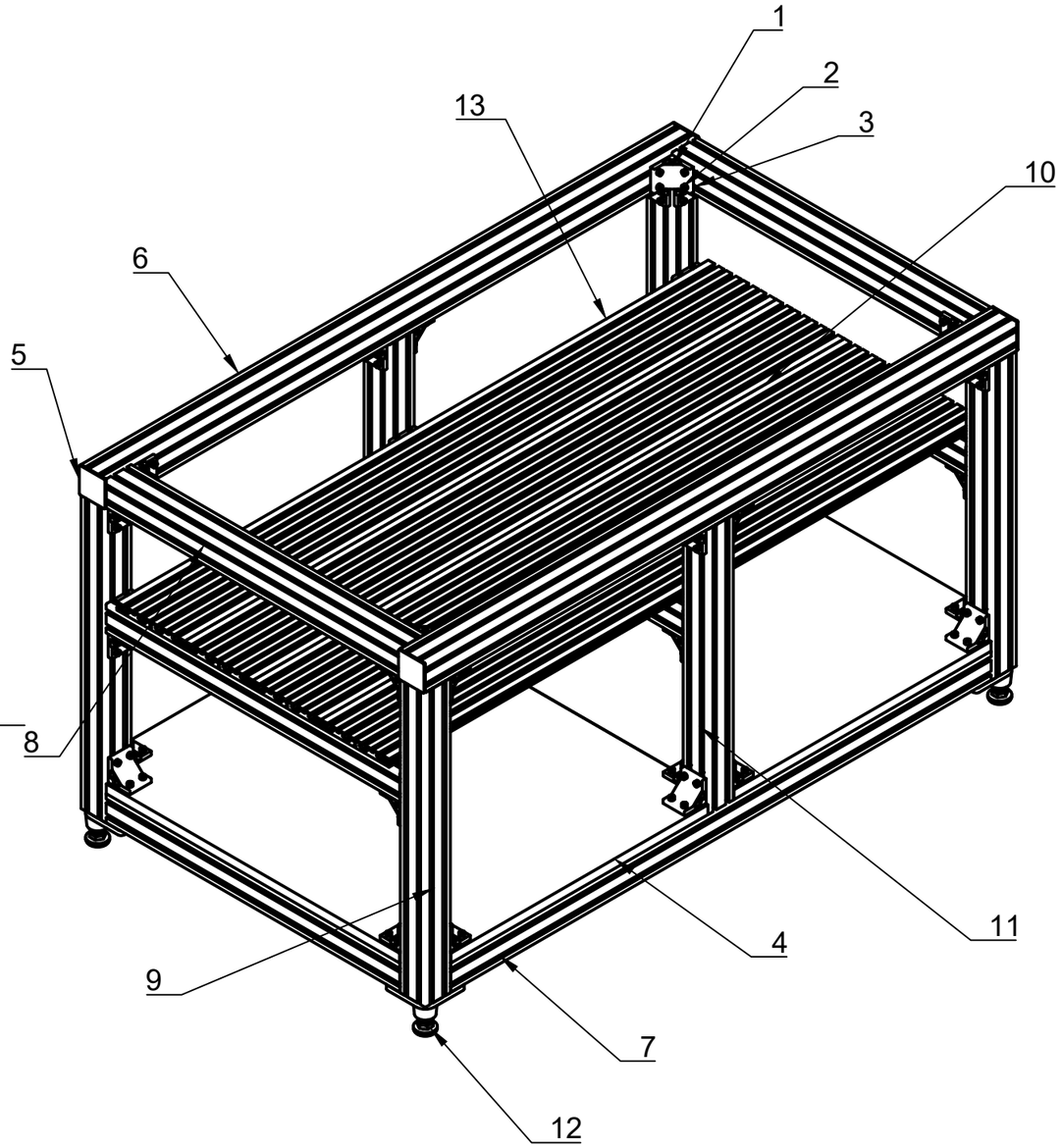

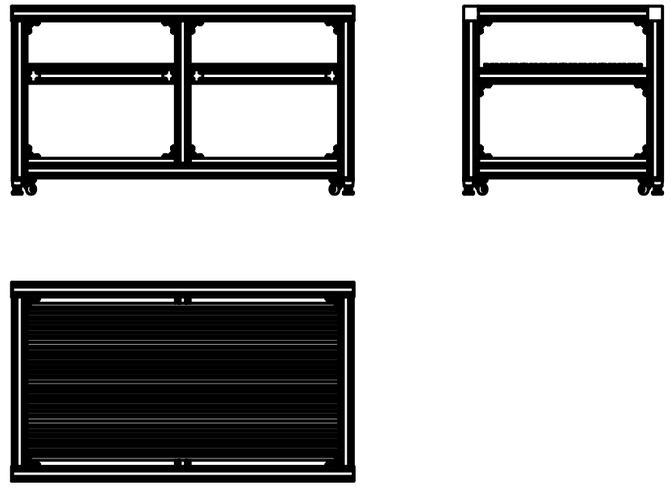

Part List			
Item	Qty	Part Number	Part Description
1	55	HBLTD6-C	6 Series / Thick 2 Slots Bracket
2	228	CBM6-15	Socket Head Cap Screws
3	228	HNTU6-6	6 Series / Pre-Assembly Insertion Spring Nuts
4	2	MPBHT20-810-695-S-E30-S60-X60-Y60	Laminated Plywood with Edge Molding
5	4	HFC6-6060-B	6 Series / Frame End Caps
6	2	HFS6-6060-1390	6 Series / slot width 8 / 60x60mm / 1390mm Aluminum Extrusion
7	2	HFS6-6060-1270	6 Series / slot width 8 / 60x60mm / 1270mm Aluminum Extrusion
8	8	HFS6-6060-690	6 Series / slot width 8 / 60x60mm / 690mm Aluminum Extrusion
9	4	HFS6-6060-640	6 Series / slot width 8 / 60x60mm / 640mm Aluminum Extrusion
10	2	HFS6-6060-605	6 Series / slot width 8 / 60x60mm / 605mm Aluminum Extrusion
11	2	HFS6-6060-580	6 Series / slot width 8 / 60x60mm / 580mm Aluminum Extrusion
12	4	HCFT6-60	Castors & Leveling Mounts Assembly / Standard
13	4	CNC Milling Machine HIGH-Z Base Panel	CNC Milling Machine Base Panel for HIGH-Z S-1000 / S-1000/T

Dept.	Technical reference	Created by	Approved by
		Simon Vansuyt 11/09/2023	
		Document type: Parst List	Document status
		Title: Gigapixel Woodbot Table	DWG No.
			Rev. / Date of issue / Sheet 1/1