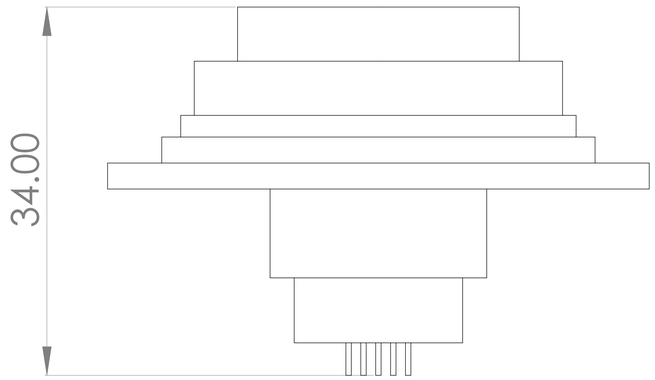

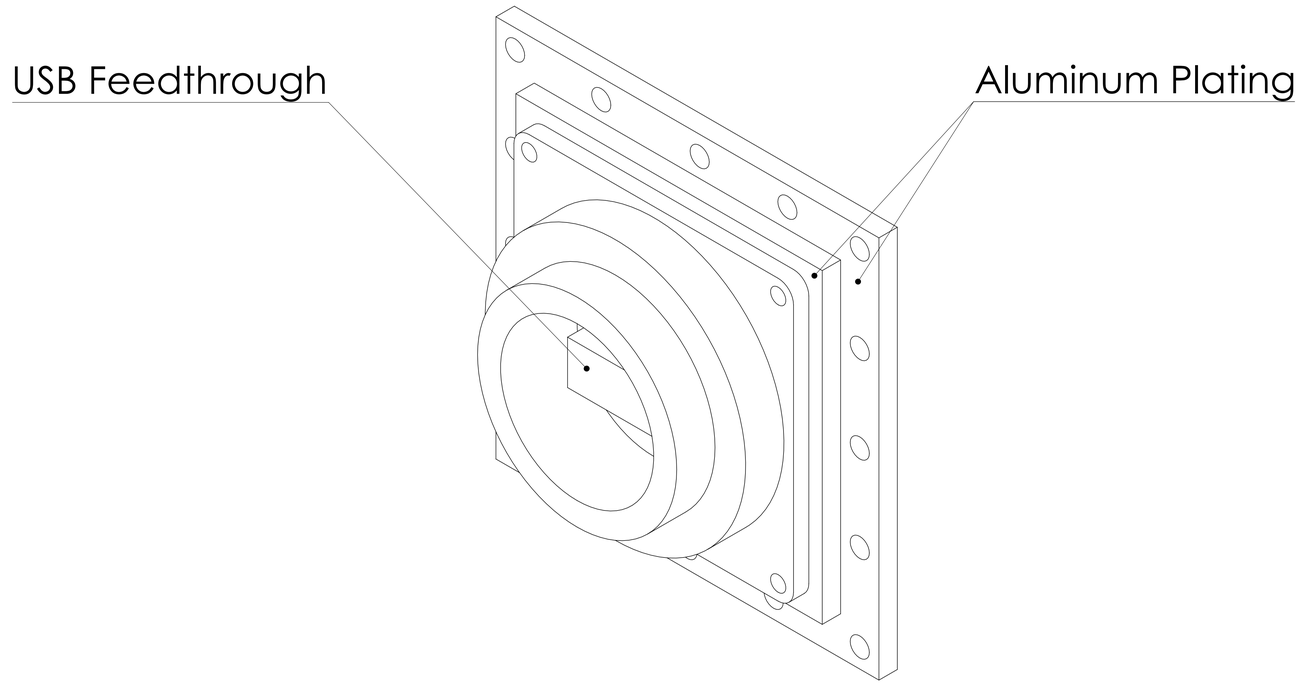

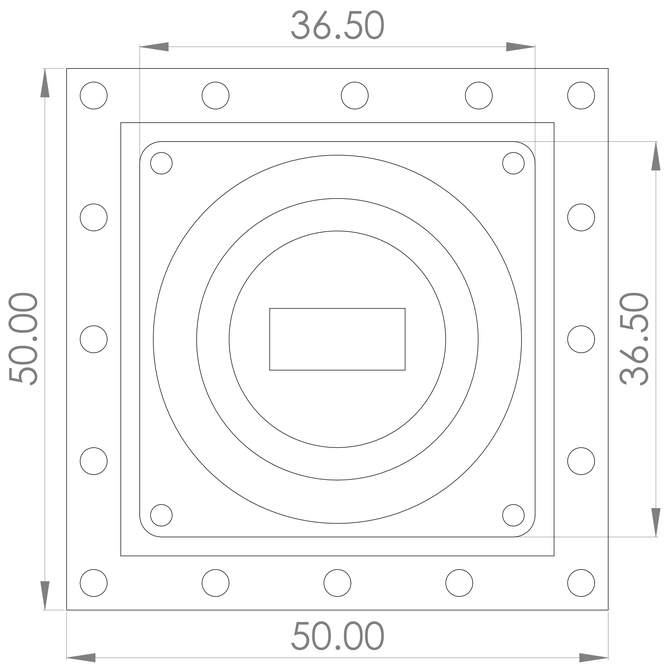

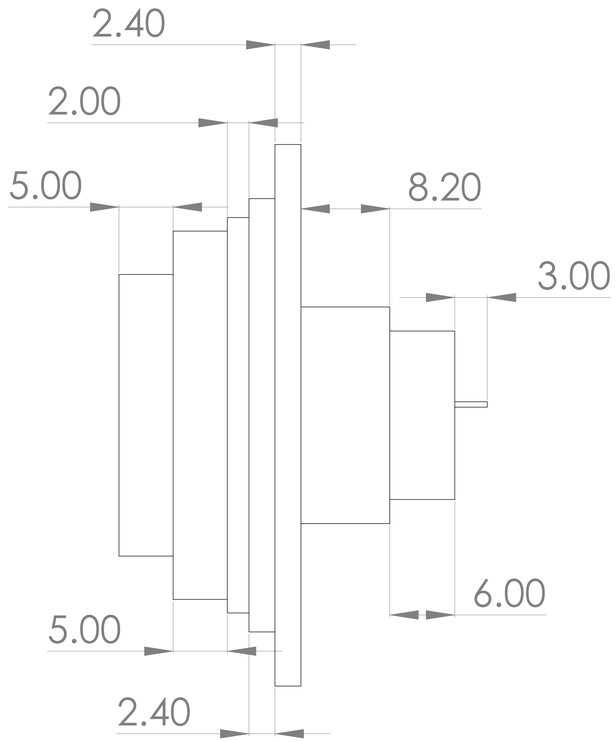

UNLESS OTHERWISE SPECIFIED: DIMENSIONS ARE IN MILLIMETERS SURFACE FINISH: TOLERANCES: LINEAR: ANGULAR:	FINISH:		DEBURR AND BREAK SHARP EDGES	DO NOT SCALE DRAWING	REVISION
	NAME	SIGNATURE	DATE	TITLE:	
DRAWN				Inner aluminum plate with USB feedthrough	
CHK'D					
APPV'D					
MFG					
Q.A				MATERIAL:	
			WEIGHT:	SCALE:0.5	SHEET 1 OF 1