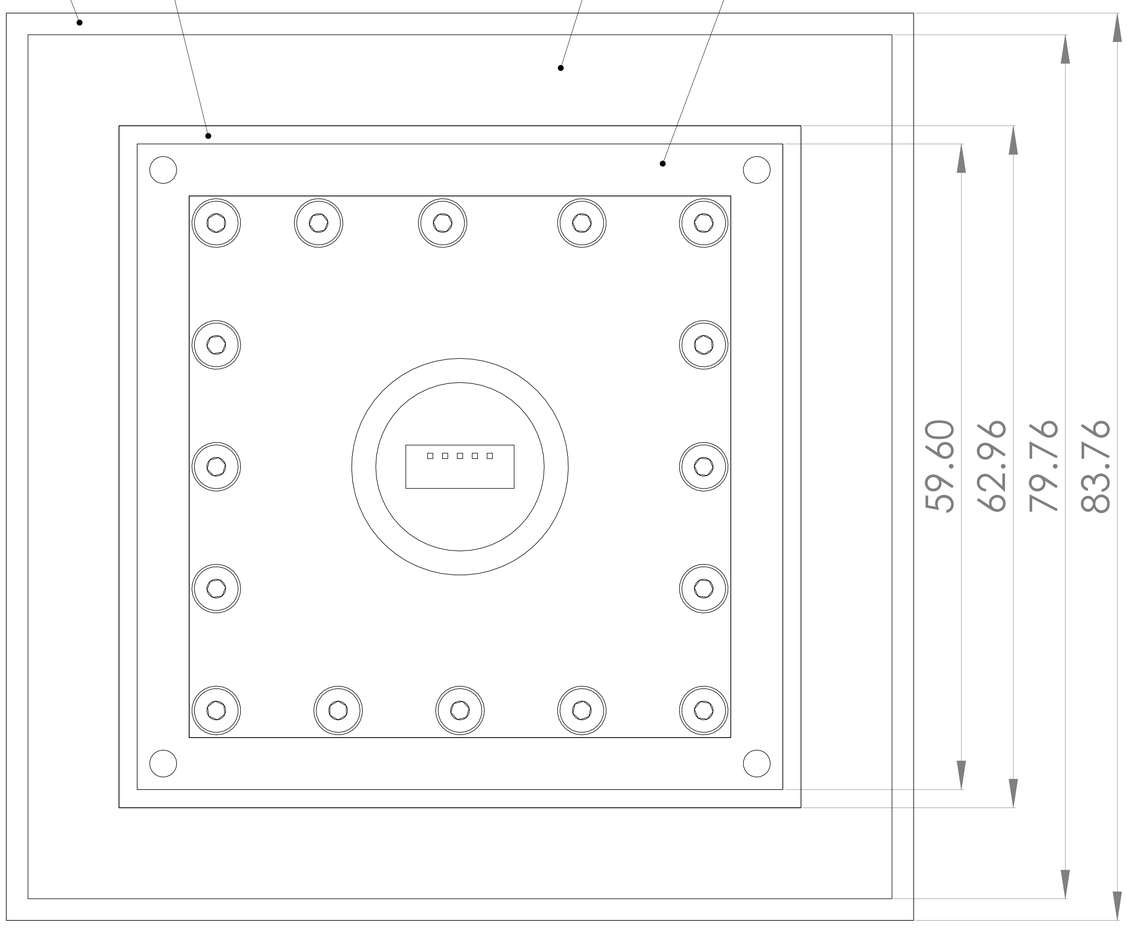

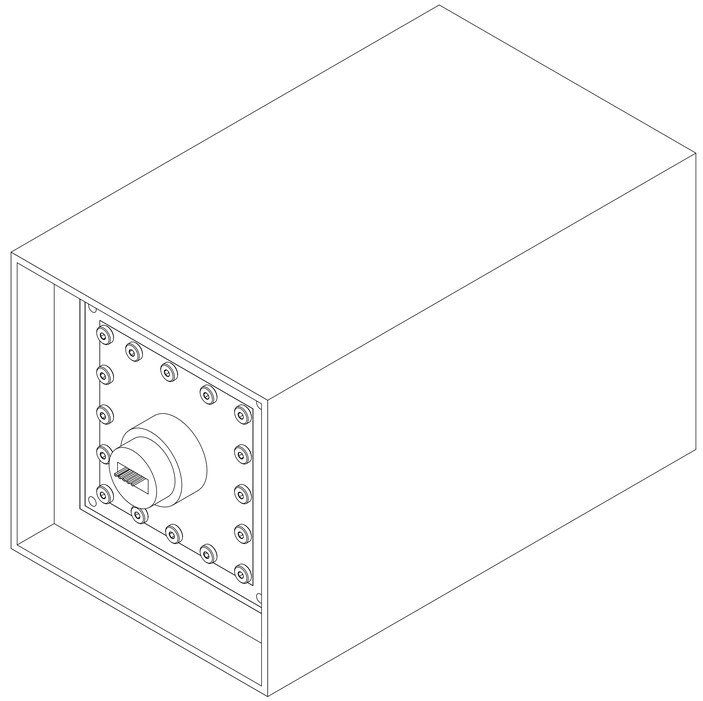

All faces from this view are square

UNLESS OTHERWISE SPECIFIED: DIMENSIONS ARE IN MILLIMETERS SURFACE FINISH: TOLERANCES: LINEAR: ANGULAR:	FINISH:		DEBURR AND BREAK SHARP EDGES	DO NOT SCALE DRAWING	REVISION:
	NAME	SIGNATURE	DATE	TITLE:	
DRAWN:					
CHK'D:					
APPV'D:					
MFG:					
Q.A:			MATERIAL:	DWG NO. iss-box	A0
			WEIGHT:	SCALE:3.5:1	SHEET 1 OF 1