TYPE TEST REPORT OF COMPLETE TYPE TEST

TÜVRheinland®

CN25ZJN4 001

Object A Three-phase Outdoor Oil-immersed Power Transformer

Type S-M-1600/22-Tier2 **Serial No.** BY04001

Rated power	1600 kVA	Rated frequency	50 Hz
Rated voltage (HV/LV)	22/0.42 kV	Rated current (HV/LV)	41.99/2199 A
Cooling type	ONAN	Vector group	Dyn5
Tapping range	±2×2.5%	Temperature class of insulation	A

Manufacturer Fuzhou Tianyu Electric Co., Ltd
No.28 Yaoxi Road, Nanyu Town, Minhou County, Fuzhou City, 350109 Fujian P.R. China

Client Fuzhou Tianyu Electric Co., Ltd
No.28 Yaoxi Road, Nanyu Town, Minhou County, Fuzhou City, 350109 Fujian P.R. China

Inspected by TÜV RHEINLAND (SHANGHAI) CO., LTD.
TÜV Rheinland Building, No. 177, Lane 777, West Guangzhong Road, Jing'an District, 200072 Shanghai P.R. China

Test location Shandong Institute for Product Quality Inspection. (SDQI)
No.1 Chidong Avenue, Chiping District, Liaocheng City, Shandong Province, P.R.China

Date of tests 27th May 2025 until 13th June 2025

The apparatus, constructed in accordance with the description, drawings and photographs incorporated in this report has been subjected to the series of proving tests in accordance with

IEC 60076-1:2011 sub-clauses: 11.1.4 h), 11.1.4 n), 11.2, 11.3, 11.4, 11.5, 11.8
IEC 60076-2:2011
IEC 60076-3:2013+AMD1:2018 sub-clauses: 10, 11.2, 11.3, 13
IEC 60076-5:2006
IEC 60076-10:2016
EN 50708-2-4:2022 sub-clauses: 5
EN 50464-4:2007+A1:2011
ISO 9227:2022

This Type Test Report has been issued by TÜV Rheinland following exclusively the STL Guides. The tests performed in Laboratory were under supervision of TÜV Rheinland engineers.

The results are shown in the record of Proving Tests and the oscillograms attached hereto. The values obtained and the general performance are considered to comply with the above Standard and to justify the ratings assigned by the manufacturer as listed on page 6.

The Report applies only to the apparatus tested. The responsibility for conformity of any apparatus having the same designations with that tested rests with the Manufacturer.

This Report consists of 104 sheets in total.

Verified by	Ming Sun Zehua Song	Reviewed by	Jingsong Xu
10/07/2025	Singed by Ming Sun(PE), Zehua Song(Trainee)	10/07/2025	
Date	Name/Position(PE)	Date	Name/Position(Authorizer)

Copyright: Only integral reproduction of this report is permitted without written permission from TÜV RHEINLAND. Electronic copies as PDF or scan of this report may be available and have the status "for information only". The sealed and bound version of the report is the only valid version.
E-mail: service-gc@tuv.com Internet: http://www.tuv.com GC Hotline:(86) 4008831300 (86) 8009993668
Tel : (86/21) 61081188 Fax : (86/21) 61081199 Version: 3 Release date: 2025-06-16

1 Certificate of Conformity

A Certificate of Conformity contains a record of a series of type tests carried out strictly in accordance with a recognized standard. The equipment tested has fulfilled the requirements of this standard and the relevant ratings assigned by the manufacturer are endorsed by TÜV Rheinland. The Certificate is applicable only to the equipment tested. TÜV Rheinland is responsible for the validity and the contents of the Certificate.

The responsibility for conformity of any apparatus having the same designation as the one tested rests with the manufacturer. The Certificate contains the essential drawings and a description of the equipment tested.

Detailed rules are given in TÜV Rheinland's Certification procedure.

2 Type Test Report

A Type Test Report contains a record of a series of type tests carried out strictly in accordance with a standard recognized by TÜV Rheinland. The test object has fulfilled the requirements of this standard and the relevant ratings assigned by the manufacturer are endorsed by TÜV Rheinland. The Type Test Report is applicable only to the test object. TÜV Rheinland is responsible for the validity and the contents of the Type Test Report. The responsibility for conformity of any apparatus having the same designation as the one tested rests with the manufacturer. The Type Test Report contains the essential drawings and a description of the equipment tested.

TÜV Rheinland issues four basic Type Test Certificates (Reports) following exclusively the STL Guides.

They are as follows:

2.1 ☒ Type Test Report of Complete Type Test

This Report provides the verification of all the rated characteristics of the equipment as assigned by the manufacturer, by means of the performance of all type tests specified by the Standards.

2.2 ☐ Type Test Report of Dielectric Performance

This Report provides the verification of all dielectric ratings by means of the performance of the appropriate type tests specified by the Standards.

2.3 ☐ Type Test Report of Temperature Rise Performance

This Report provides the verification of the cooling methods and defines temperature-rise limits, by means of the performance of the appropriate type tests specified by the Standards.

2.4 ☐ Type Test Report of Short-Circuit Performance

This Report provides the verification of the ability to withstand the dynamic effect of short circuit, by means of the performance of the appropriate type tests specified by the Standards.

3 Performance Test Report

A Performance Test Report contains a record of one or more tests which have been carried out according to a recognized standard and/or the client's instructions. These tests are not necessarily in accordance with a recognized standard. The test results do not verify ratings of the test object.

TÜV Rheinland issues three types of Performance Test Report.

3.1 ☐ The tests have been carried out strictly in accordance with a recognized standard. The test object has complied with the relevant requirements.
This sentence will display on the front page of Performance Test Report if the tests have been performed in accordance with a recognized standard, but the series of tests does not completely fulfil the requirements for a Certificate of Compliance (for example, if the number of test series is not a complete series of type tests).The Report contains verified drawings and a description of the test object. The condition of the test object after the tests is assessed and recorded in the Report.

3.2 ☐ The tests have been carried out in accordance with the client's instructions. Test procedure and test parameters were based on a recognized standard.
This sentence will display on the front page of Performance Test Report if the number of test duties, the test procedure and the test parameters are based on a recognized standard and related to the ratings assigned by the manufacturer. Verification of the drawings (if submitted) and assessment of the condition after the tests is only done on the client's request.

3.3 ☐ The tests have been carried out according to the client's instructions.
This sentence will display on the front page of Performance Test Report if the test shots, test procedure and/or test parameters are not in accordance with a recognized standard.

4 Standards
When reference is made to a standard, and the date of issue is not stated, this applies to the latest issue, including amendments which have been officially published prior to the date of the tests.

5 Official and uncontrolled test documents
The official test documents of TÜV Rheinland Laboratory are issued in bound form. Uncontrolled copies may be provided as loose sheets or as a digital file for convenience of reproduction by the client.
The copyright has to be respected at all times.

6 Accuracy of measurement
In the table of test results the measured quantities are given in three digits. This method of presentation does not indicate an accuracy. The guaranteed uncertainty in the figures mentioned, taking into account the total measuring system, is less than 5%, unless mentioned otherwise.

7 Subcontracting laboratory qualified by CNAS (China National Accreditation Service for Conformity Assessment)
Shandong Institute for Product Quality Inspection. (SDQI) have been entered in the CNAS-register for laboratories under resp. CNAS L1177 for the testing services as defined in the Field of Accreditation. The accreditation is carried out in accordance with ISO/IEC 17025.

Table of Contents

1 IDENTIFICATION OF THE APPARATUS TESTED 6

1.1 Ratings assigned by the manufacturer 6

1.2 Description of apparatus tested 6

1.3 List of documents and photographs 7

2 GENERAL INFORMATION 11

2.1 The tests were witnessed by 11

2.2 The tests were observed by 11

2.3 Summary of tests 11

2.4 Applicable standards 13

3 Routine tests before short-circuit withstand test 14

3.1 Measurement of winding resistance 14

3.2 Measurement of voltage ratio and check of phase displacement 16

3.3 Measurement of short-circuit impedance and load loss 18

3.4 Measurement of no-load loss and current 21

3.5 Applied voltage test 23

3.6 Induced voltage withstand test 25

3.7 Leak testing with pressure for liquid immersed transformers (tightness test) 27

4 Special tests 29

4.1 Short-circuit withstand test 29

4.2 Special test (endurance test) for corrugated tank 52

4.3 Induced voltage test with partial discharge measurement 54

4.4 Measurement of dissolved gasses in dielectric liquid 58

4.5 Breakdown voltage, dissipation factor and water content measurement for dielectric liquid 59

4.6 Salt spray tests 60

5 Routine and special tests after short-circuit withstand test 62

5.1 Measurement of winding resistance 62

5.2 Measurement of voltage ratio and check of phase displacement 64

5.3 Measurement of short-circuit impedance and load loss 66

5.4 Measurement of no-load loss and current 69

5.5 Leak testing with pressure for liquid immersed transformers (tightness test) 71

5.6 Applied voltage test 73

5.7 Induced voltage withstand test 75

5.8 Measurement of d.c. insulation resistance each winding to earth and between windings 77

5.9 Lightning impulse voltage tests (Full wave and chopped wave) 79

6 Type tests 94
6.1 Temperature-rise test for liquid-immersed transformers 94
6.2 Determination of sound levels 99

7 Drawings.....102

1 IDENTIFICATION OF THE APPARATUS TESTED

1.1 Ratings assigned by the manufacturer

Distribution transformer		
Manufacturer	Fuzhou Tianyu Electric Co., Ltd	
Designation	S-M-1600/22-Tier2	
Serial number/year of manufacture	BY04001/ 2025-05	
Sampling procedure	By the manufacturer	
Rated power *(S_r)*	1600 kVA	X
Rated voltage (HV/LV) *(U_r)*	22(±2×2.5%)/0.42 kV	X
Rated frequency *(f_r)*	50 Hz	X
Rated current (HV/LV) *(I_r)*	41.99/2199 A	X
Rated insulation level (Um/LI/LIC/AC) of HV	24/125/138/50 kV	X
Rated insulation level (Um/LI/LIC/AC) of LV	1.1/20/22/10 kV	X
Rated insulation level (Um/LI/AC) of LVN	1.1/20/10 kV	X
Cooling method	ONAN	X
Connection symbol	Dyn5	X
Insulation	Paper / Oil	
Sound power level	≤57 dB(A)	X
Short circuit impedance between HV and LV in reference to the rated power	$6.0\%^{\pm 10\%}$	X
Load losses at 75 ℃ at rated frequency of 50 Hz	≤12 kW	X
No-load current at rated voltage and frequency	$0.40\%^{+30\%}$	X
No-load losses at rated voltage and frequency	≤1.08 kW	X
Material of HV/LV windings	Copper	
Nature of the core material	Silicon steel sheet	
Insulating oil mass	700 kg	
Total weight	4475 kg	
Note: X = This rating has been proved by the tests of this report.		

1.2 Description of apparatus tested

1.2.1 General description of apparatus tested:

A Three-phase Outdoor Oil-immersed Power Transformer is comprised of high voltage windings, low voltage windings, high voltage bushings, oil tank and radiators.

This transformer is assigned the type of cooling: ONAN. And the connection symbol is Dyn5.

HV winding wire: Enamel insulated copper wire with dimensions 2.50×5.00 mm /2.66×5.16 mm

LV winding wire: Copper foil with dimensions 1.2×420 mm

Core material: silicon steel sheet / B20R070

1.2.2 The main apparatus assigned by manufacturer as follow:

1.2.2.1 High voltage bushing

Designation	DIN-24/250
Maximum rated voltage	24 kV
Rated frequency	50 Hz
Rated current	250 A
Year of manufacture	2025
Serial number	--
Manufacturer	Hebei Yachen Electric Co., Ltd.

1.2.2.2 Low voltage bushing

Designation	DIN-1/3150
Maximum rated voltage	1 kV
Rated frequency	50 Hz
Rated current	3150 A
Year of manufacture	2025
Serial number	--
Manufacturer	Hebei Yachen Electric Co., Ltd.

1.3 List of documents and photographs

1.3.1 The apparatus tested is guaranteed by the manufacturer to comply with the following technical documents:

S-M-1600/22-Tier2 A Three-phase Outdoor Oil-immersed Power Transformer test program

1.3.2 Drawings submitted by the manufacturer and identified by SDQI laboratory and TÜV Rheinland had verified that these drawings adequately represent the equipment tested.
-The following drawings were attached in the report:

1RB.710.8828.e	S-M-1600/22-Tier2 A Three-phase Outdoor Oil-immersed Power Transformer assembly drawings	Approved date:2025-05
8RB.640.8828	S20-M-1600/22-Tier2 A Three-phase Outdoor Oil-immersed Power Transformer core assembly drawing	Approved date:2025-05

Notes: The laboratory is responsible for checking that the drawings and data schedules submitted adequately represent essential details of the equipment tested, but is not responsible for the accuracy of detailed drawings.

1.3.3 Confirmed date of the apparatus tested: 2025-05-26

1.3.4 Photographs of test object:

R. BRAND

TRANSFORMER

PHASE: 3
RATED POWER: 1600kVA
TYPE: S-M-1600/22-Tier2
FREQUENCY: 50HZ
IMPEDANCE VOLT: 6.287 %
PRODUCT NO: 1RB.710.8828.1
STANDARD: MSZ EN 60076-1.2.3.5
EcoDesign-Tier 2
VECTOR GROUP SYMBOL: Dyn5
TYPE OF COOLING: ONAN
SERVICE CONDITION: OUT DOOR

INSULATION LEVEL: H.V. Um/LI/LIC/AC 24/125/138/50 kV
L.V. Um/LI/LIC/AC 1.1/20/22/10 kV

SERIAL NO: BY04001

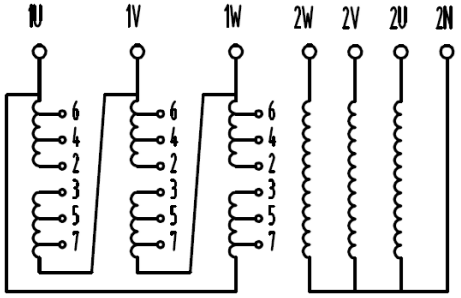

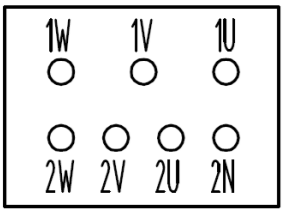

TAPPING POSITION	HV		LV1	
	V	A	V	A
1	23100			
2	22550			
3	22000	41.99	420	2199
4	21450			
5	20900			

SHIPPING: 4475 kg
BODY: 3015 kg
OIL: 700 kg
TOTAL: 4475 kg
NO PCB
COATING: EPOXY PRIMER POWDER WITH POLYURETHANE TOPCOAT POWDER

OIL NO.: I-20 ℃
OIL BASE: NAPHTHENE BASE
WIRE METERIAL: Cu
P0: 1.020 kW
Pk: 11.503 kW
NOISE LEVEL: 57 dB
WARRANTY PERIOD: 2028/3/19

FUZHOU TIANYU ELECTRIC CO.,LTD

MADE IN 2025-05

Nameplate of test sample

2 GENERAL INFORMATION

2.1 The tests were witnessed by

Name	Company
Mr. Zeyong Luo	Fuzhou Tianyu Electric Co., Ltd
Mr. Zehua Song	TÜV RHEINLAND/CCIC (QINGDAO) CO., LTD.

2.2 The tests were observed by

Testing location: Shandong Institute for Product Quality Inspection. (SDQI)
No.1 Chidong Avenue, Chiping District, Liaocheng City, Shandong Province, P.R. China

Name	Company
Mr. Guangcheng Zhou	Shandong Institute for Product Quality Inspection
Mr. Shouzhong Sun	Shandong Institute for Product Quality Inspection

2.3 Summary of tests

No.	Test items	Test category	Subclause	Verdict
1	Measurement of winding resistance	R	IEC 60076-1 11.2	Passed
2	Measurement of voltage ratio and check of phase displacement a. Voltage ratio tolerance of principal taps: ±0.5% b. Connection symbols: Dyn5	R	IEC 60076-1 11.3	Passed
3	Measurement of short-circuit impedance and load loss t: 75 ℃ Z(%): $6.0^{\pm 10\%}$ Pk: ≤12 kW	R	IEC 60076-1 11.4	Passed
4	Measurement of no-load loss and current a. 100%Ur, I_0(%): $0.4\%^{+30\%}$, P0: ≤1.08 kW b. 90%Ur, I_0(%), P0: actual measured value c. 110%Ur, I_0(%), P0: actual measured value	R/T	IEC 60076-1 11.5	Passed
5	Applied voltage test: (Routine test) a. HV winding: 50 kV b. LV winding: 10 kV c. LVN winding: 10 kV	R	IEC 60076-3 10	Passed
6	Induced voltage withstand test Tap position: principal tap Voltage applied position: Low voltage winding Applied voltage: 2×Ur Test frequency: 200 Hz Induced voltage: 44 kV Voltage duration: 30 s	R	IEC 60076-3 11.2	Passed

No.	Test items and/or	Test category	Subclause	Verdict
7	Leak testing with pressure for liquid immersed transformers a. 30 kPa maintained for 8 h	R	IEC 60076-1 11.8	Passed
8	Special test (endurance test) for corrugated tank	S	EN 50708-2-4 5 & EN 50464-4	Passed
9	Short-circuit withstand test a. Category I b. Short-circuit current applied number: 3 times for each phase c. Tap position being tested: Tap 1, 3, 5 d. Duration of short-circuit: 500 ms	S	IEC 60076-5	Passed
10	Measurement of d.c. insulation resistance each winding to earth and between windings	S	IEC 60076-1 11.1.4 h)	Passed
11	Induced voltage test with partial discharge measurement	S	IEC 60076-3 11.3	Passed
12	Measurement of dissolved gasses in dielectric liquid	S	IEC 60076-1 11.1.4 n)	Passed
13	Breakdown voltage dissipation factor and water content measurement for dielectric liquid	S	Technical specification	Passed
14	Salt spray tests Concentration of solution: 50±5 g/l pH: 6.5 to 7.2 Test duration: 196 h	S	ISO 9227 (1)	Passed
15	Lightning impulse voltage tests (Full wave and chopped wave) a. Full wave lightning impulse test for the HV terminals (LI): 125 kV b. Chopped wave lightning impulse test for the HV terminals (LIC): 138 kV c. Full wave lightning impulse test for the LV and LVN winding (LI): 20 kV d. Chopped wave lightning impulse test for the LV winding (LIC): 22 kV	T/S	IEC 60076-3 13 & IEC 60076-4 (2)	Passed
16	Temperature-rise test for liquid-immersed transformers a. Top oil temperature rise: ≤60 K b. Winding temperature rise: ≤65 K	T	IEC 60076-2	Passed
17	Determination of sound levels a. Sound power level is not exceed 57 dB(A) at ONAN condition.	T	IEC 60076-10	Passed
Remarks: R: Routine test, S: Special test, T: Type test				

Note:
(1) = This test was carried out according to the ISO 9227 salt spary test method standard, the corrosion protection standard IS0 12944-6 also referred to the ISO 9227 salt spary test method standard.

(2) = Lightning impulse voltage tests also refer to IEC 60076-4 Guide to the lightning impulse and switching impulse testing - Power transformers and reactors. It gives guidance and explanatory comments on the existing procedures for lightning and switching impulse testing of power transformers to supplement the requirements of IEC 60076-3.

2.4 Applicable standards

When reference is made to a standard and the date of issue is not stated, this applies to the latest issue, including amendments, which have been officially published prior to the date of the tests.

3 Routine tests before short-circuit withstand test

3.1 Measurement of winding resistance

Standard and date

Standard	Subclause 11.2 of IEC 60076-1
Test date	2025-05-27

Environmental conditions

Ambient temperature	25.8 ℃
Ambient air pressure	101.3 kPa
Relative humidity	28%

Characteristic test data

Serial number of distribution transformer	BY04001
Applied current	5 Ad.c. for HV windings and 20 Ad.c. for LV windings

Requirement

For oil-immersed transformer:

Before conducting this test, the transformer shall not be excited for at least 3 h.

The average liquid temperature is taken as the mean of the top and bottom liquid temperatures.

The difference in temperature between the top and bottom liquid shall not exceed 5 K.

Procedure

The resistance of each winding was measured by means of the direct current measurement.

The average oil was taken as the mean of the top and bottom oil temperatures.

The following combinations were measured:

a. Between 1U-1V, 1V-1W and 1W-1U for all tapping positions.

b. Between 2U-2V, 2V-2W, 2W-2U.

c. Between 2U-2N.

Test data

Measurement of winding resistance						
Winding	Tap position	Measured value (R)			Resistance unbalance rate [%]	
		1U-1V	1V-1W	1W-1U	Calculated value	Required value
HV [Ω]	1	1.6477	1.6496	1.6525	0.29	--
	2	1.6046	1.6064	1.6095	0.30	--
	3	1.5612	1.5634	1.5661	0.31	--
	4	1.5171	1.5192	1.5220	0.32	--
	5	1.4744	1.4768	1.4795	0.35	--
LV [mΩ]	--	2U-2V	2V-2W	2W-2U	0.66	--
		0.5322	0.5287	0.5311		
		2U-2N			--	--
		0.2867				
Supplement information: Top/bottom oil temperature: 25.8/25.8 ℃ Formula: Resistance unbalance rate = $(R_{max}-R_{min})/R_{average}$						

Result

The test results are for information and calculation only.

Test photograph

3.2 Measurement of voltage ratio and check of phase displacement

Standard and date

Standard	Subclause 11.3 of IEC 60076-1
Test date	2025-05-27

Environmental conditions

Ambient temperature	25.8 ℃
Ambient air pressure	101.3 kPa
Relative humidity	28%

Characteristic test data

Serial number of distribution transformer	BY04001

Requirement

For principle tapping, the measured ratio shall not differ more than the following choice which is lower
a) ±0.5 % of the specified ratio
b) ±1/10 of the actual percentage impedance on the principal tapping
For other tappings, the measured ratio shall not differ more than 0.5% from the calculated ratio.
Connection symbol: Dyn5.

Procedure

The ratio was measured on each winding by means of ratio bridge.
The following combinations were measured:
Between 1U1V and 2U2V, 1V1W and 2V2W, 1W1U and 2W2U for all tapping positions.

The connection symbol was checked together with the determination of the voltage ratio. Balance of the bridge can be attained only if the voltages connected to the bridge from the primary and secondary side have the same phase and sense.

Test data

Measurement of voltage ratio and check of phase displacement										
HV side		LV side	Calculated Ratio	Measured ratio			Ratio deviation			Connection symbol
Tap position	Voltage [kV]	Voltage [kV]		1U1V/ 2U2V	1V1W/ 2V2W	1W1U/ 2W2U	1U1V/ 2U2V [%]	1V1W/ 2V2W [%]	1W1U/ 2W2U [%]	
1	23.1	0.42	55.000	55.009	55.012	55.011	0.02	0.02	0.02	Dyn5
2	22.55		53.690	53.697	53.699	53.698	0.01	0.02	0.01	
3	22		52.381	52.389	52.391	52.393	0.02	0.02	0.02	
4	21.45		51.071	51.077	51.079	51.081	0.01	0.02	0.02	
5	20.9		49.762	49.769	49.774	49.772	0.01	0.02	0.02	
Supplement information: Formula: Ratio deviation = (Measured ratio – Calculated ratio)/Calculated ratio										

Result

Passed, ratio deviation was not differ more than ±0.5% from the calculated ratio.
Vector group has been verified and determined Dyn5.

Test photograph

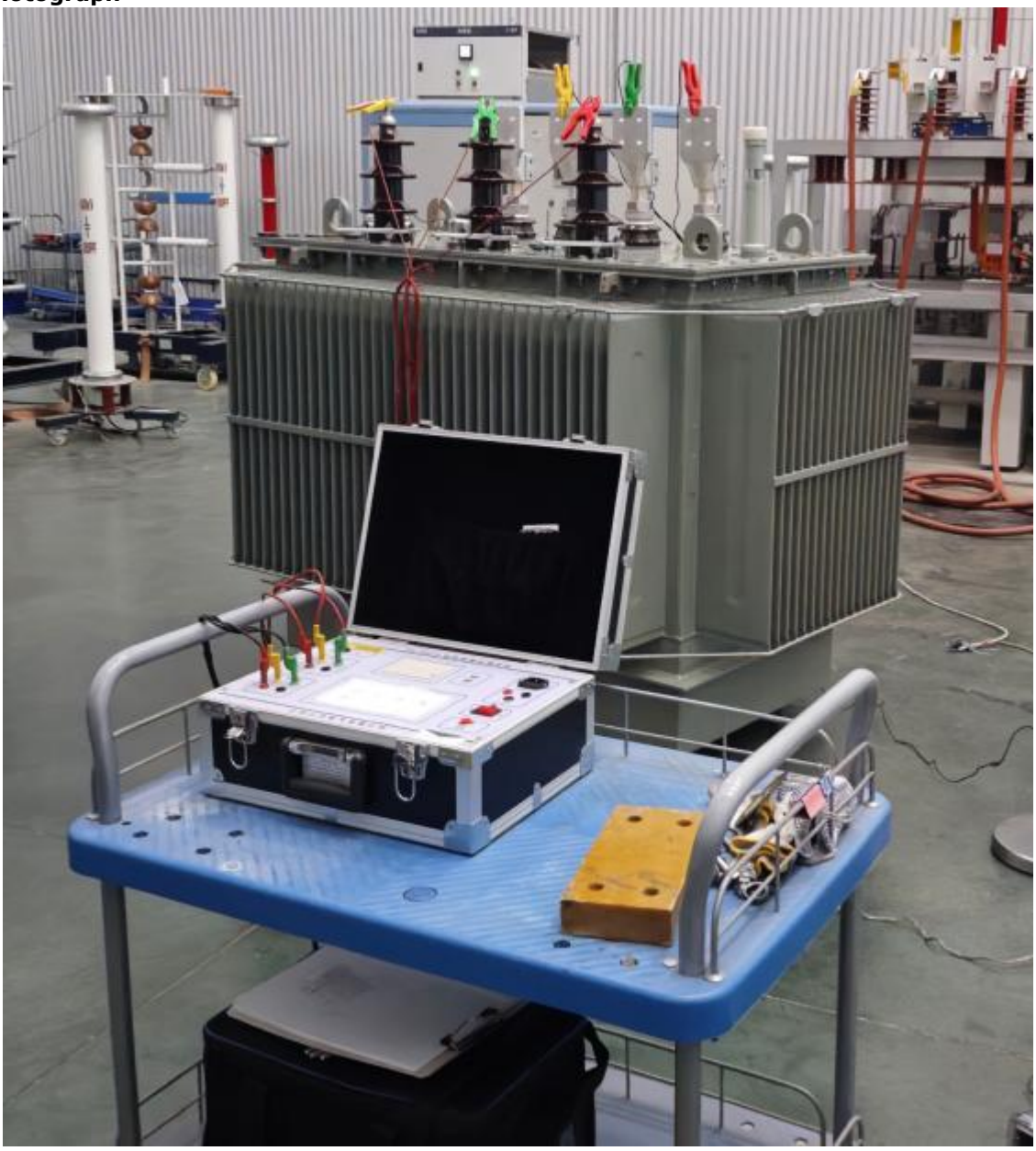

3.3 Measurement of short-circuit impedance and load loss

Standard and date

Standard	Subclause 11.4 of IEC 60076-1
Test date	2025-05-27

Environmental conditions

Ambient temperature	25.8 ℃
Ambient air pressure	101.2 kPa
Relative humidity	27%

Characteristic test data

Serial number of distribution transformer	BY04001
Material of windings	Copper

Requirement

Load loss in tap 3 HV-LV combination	≤12 kW
Impedance voltage of HV-LV combination in tap 3	6.0% (1±10%)

Short-circuit impedance and load loss test circuit

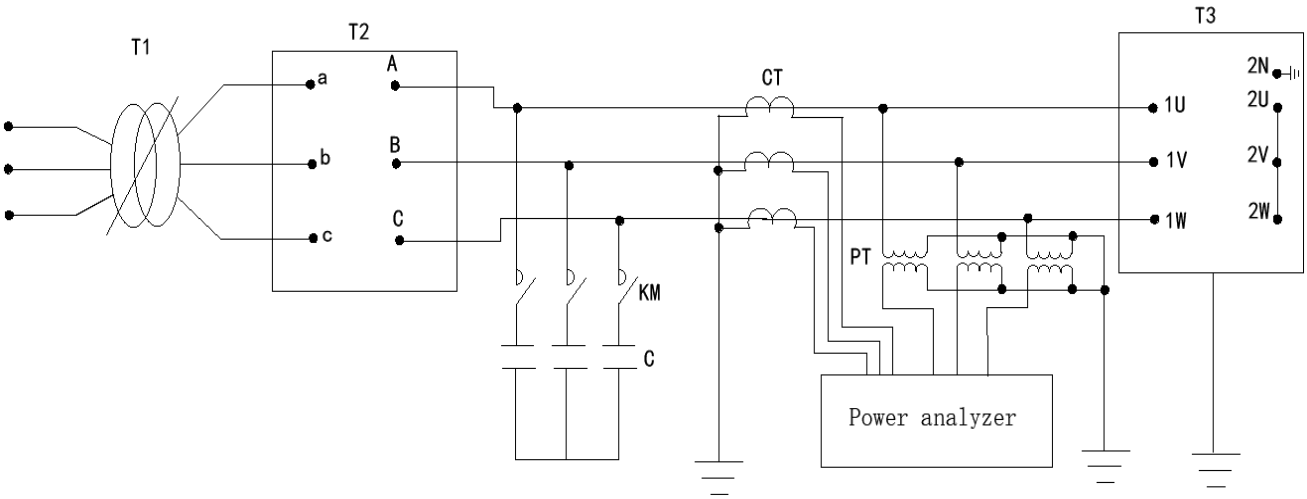

T1	Voltage regulator	T2	Setp-up transformer
T3	Transformer tested	CT	Current transformer
PT	Voltage transformer	KM	Vacuum contactor
C	Capacitor		
Short-circuit impedance and load loss test system			

Procedure

The short-circuit impedance and load losses for a pair of windings were measured with rated frequency with voltage applied to the terminals of one winding, while the other winding was shorted.
The average oil temperature was taken as the mean of the top and bottom oil temperatures.
The measurements were taken as follows:
The combination HV at tapping position 3 with LV terminals shorted and current based on rated power.
The measuring results were recalculated for 75 ℃ winding temperature.

Test data

Measurement of short-circuit impedance and load loss									
HV tapping position	1			3			5		
Rated voltage of HV side [kV]	23.1			22.0			20.9		
Rated voltage of LV side [kV]	0.42			0.42			0.42		
Rated current of HV side $I_{HVrated}$ [A]	39.98962903			41.98911049			44.19906367		
Rated current of LV side $I_{LVrated}$ [A]	2199.429597			2199.429597			2199.429597		
Resistance at Tm 25.8 ℃									
Measured value for HV winding [Ω]	1U1V	1V1W	1U1W	1U1V	1V1W	1U1W	1U1V	1V1W	1U1W
	1.6477	1.6496	1.6525	1.5612	1.5634	1.5661	1.4744	1.4768	1.4795
Average value for HV winding (Phase to phase) R_{HV} [Ω]	1.6499			1.5636			1.4769		
Measured value for LV winding [Ω]	2U-2V			2V-2W			2U-2W		
	0.0005322			0.0005287			0.0005311		
Average value for LV winding (Phase to phase) R_{LV} [Ω]	0.0005307								
Ohmic loss at rated power									
Calculated value at 25.8 ℃ P_{ct} [W]	7808.429377			7985.694821			8178.455487		
Correction value at 75 ℃ $P_{ohmic\ loss}$ [W]	9281.49197			9492.19860			9721.32362		
Calculated equation: a. $R_{\theta 1} = R_{TM}(235+\theta_1)/(235+Tm)$ b. $P_{ct} = \Sigma I^2 R_{\theta 1} = 1.5\times I_{HV}^2 R_{HV\theta 1}+1.5\times I_{LV}^2 R_{LV\theta 1}$ c. $K = (235+75)/(235+\theta_1)$ d. $P_{ohmic\ loss} = P_{ct}\times K$									
Load loss at rated power (Liquid average temperature θ_1: 25.8 ℃)									
Measured value at 25.8 ℃ P_{mt} [W]	3445.9			3535.4			3771.6		
Corrected measuring value (rated current) at 25.8 ℃ P_{cmt} [W]	9587.743765			9765.023694			9902.812542		
Additional loss at 25.8 ℃ P_{a2} [W]	1779.314388			1779.328873			1724.357055		
Correction additional loss at 75 ℃ $P_{additional\ loss}$ [W]	1496.919975			1496.932161			1450.684903		
Load loss at 75 ℃ $P_{load\ loss}$ [W]	10778.4			10989.1			11172.0		
Calculated equation: a. $P_{cmt} = P_{mt}\times(I_{HVrated}/I_{ac})^2$ b. $P_{a2} = P_{cmt} - P_{ct}$ c. $P_{additional\ loss} = P_{a2}\times(235+\theta_1)/(235+75)$ d. $P_{load\ loss} = P_{ohmic\ loss}+P_{additional\ loss}$									
Impedance voltage									
Applied current I_{ac} [A]	23.974			25.265			27.277		
Measured voltage [V]	874.36			823.86			783.75		
Short-circuit impedance [%]	6.3212			6.2317			6.0850		
Short-circuit impedance [Ω]	21.082			18.851			16.613		

Result

Passed, load loss in tap 3 HV-LV combination was less than the requirement of 12 kW. Impedance voltage of HV-LV combination in tap 3 met the requirement of 6.0% (1±10%).

Test photograph

3.4 Measurement of no-load loss and current

Standard and date

Standard	Subclause 11.5 of IEC 60076-1
Test date	2025-05-27

Environmental conditions

Ambient temperature	25.8 ℃
Ambient air pressure	101.2 kPa
Relative humidity	27%

Characteristic test data

Serial number of distribution transformer	BY04001
Material of windings	Copper
Applied rated voltage from LV windings	420 V

Requirement

Maximum no-load loss at 100% voltage	≤1.08 kW
No-load current ratio	$0.40\%^{+30\%}$

No-load loss and current test circuit

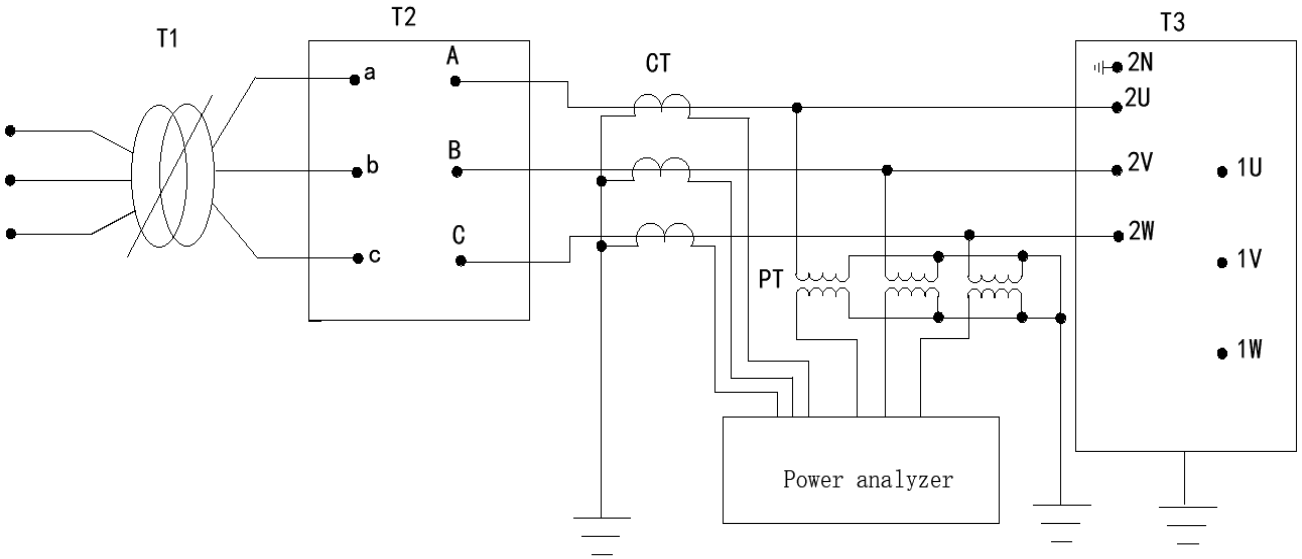

T1	Voltage regulator	T2	Setp-up transformer
T3	Transformer tested	CT	Current transformer
PT	Voltage transformer		
No load loss and current test system			

Procedure

The no-load loss and no-load current were measured at at 90%, 100% and 110% of the rated voltage at principal tapping (tap position 3) for HV winding, supplied to the low voltage terminals with 420V and rated frequency of 50 Hz.

Test data

Measurement of no-load loss and current								
Tap position	Test voltage		Ratio of applied voltage to rated voltage	No-load current		No-load loss		
	Mean value (U')	r.m.s. value (U)		Mean value		Mean value (Pm)	Corrected value (P0)	Required value
	[V]	[V]	[%]	[A]	[%]	[W]	[W]	[W]
3	420.39	422.1	100	2.5867	0.12	1021.8	1017.6	≤1080
	378.44	396.08	90	1.9103	0.09	781.8	786.68	--
	462.05	468.66	110	4.0283	0.18	1319.6	1300.7	--
Calculated equation: No-load current ratio = No-load current/Rated current of LV windings P0=Pm(1+d) d=(U'-U)/U'								

Result

Passed, the measured no-load loss and current at 100% of the rated voltage were within the specified tolerance. And the no-load and current at 90% and 110% of the rated voltage are only for information.

Test photograph

3.5 Applied voltage test

Standard and date

Standard	Subclause 10 of IEC 60076-3
Test date	2025-05-27

Environmental conditions

Ambient temperature	25.8 ℃
Ambient air pressure	101.3 kPa
Relative humidity	28%

Characteristic test data

Serial number of distribution transformer	BY04001
Specified test voltage	50 kV lasts 60 seconds for HV winding 10 kV lasts 60 seconds for LV winding and neutral point terminal
Test frequency	50 Hz

Requirement

No collapse of test voltage occurred during the test.

Applied voltage test circuit

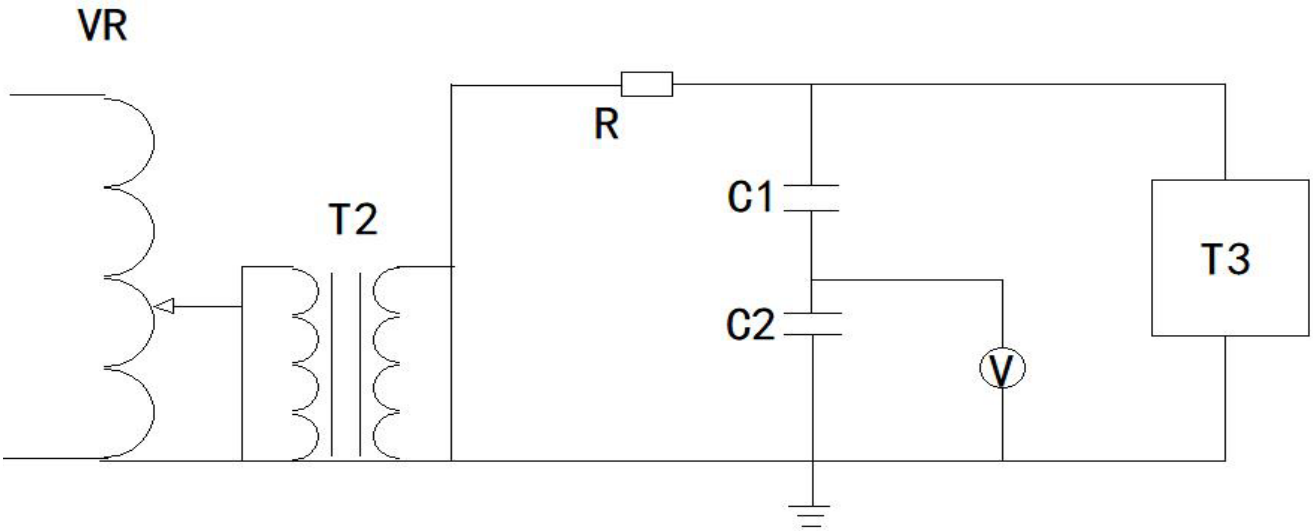

VR	Voltage regulator	T2	Experiment transformer
T3	Transformer tested	C1, C2	Voltage divider capacitor
V	Peak voltmeter	R	Protective resistance
Applied voltage (AV) test system			

Procedure

The test was carried out on each separate winding of the transformer in turn.

The full test voltage was applied for 60 s between all accessible terminals of the winding under test connected together and all accessible terminals of the remaining windings, core, frame and tank or casing of the transformer connected to earth.

Test data

Applied voltage test					
Tap position	Voltage applied to	Earth connected to	Test voltage	Duration	Frequency
			[kV]	[s]	[Hz]
Principal tap	HV winding	LV windings and frame	50.0	60	50
	LV winding & LVN	HV windings and frame	10.0	60	50
Supplement information: N/A					

Result

Passed, no collapse of test voltage occurred during the applied voltage test.

Test photograph

3.6 Induced voltage withstand test

Standard and date

Standard	Subclause 11.2 of IEC 60076-3
Test date	2025-05-27

Environmental conditions

Ambient temperature	26.1 ℃
Ambient air pressure	101.2 kPa
Relative humidity	27%

Characteristic test data

Serial number of distribution transformer	BY04001
Tap position	Principal tap
Applied voltage from LV terminal	2×Ur
Test frequency	200 Hz
Induced voltage	44 kV
Voltage duration	30 s

Requirement

No collapse of test voltage occurred during the test.

Induced voltage withstand test circuit

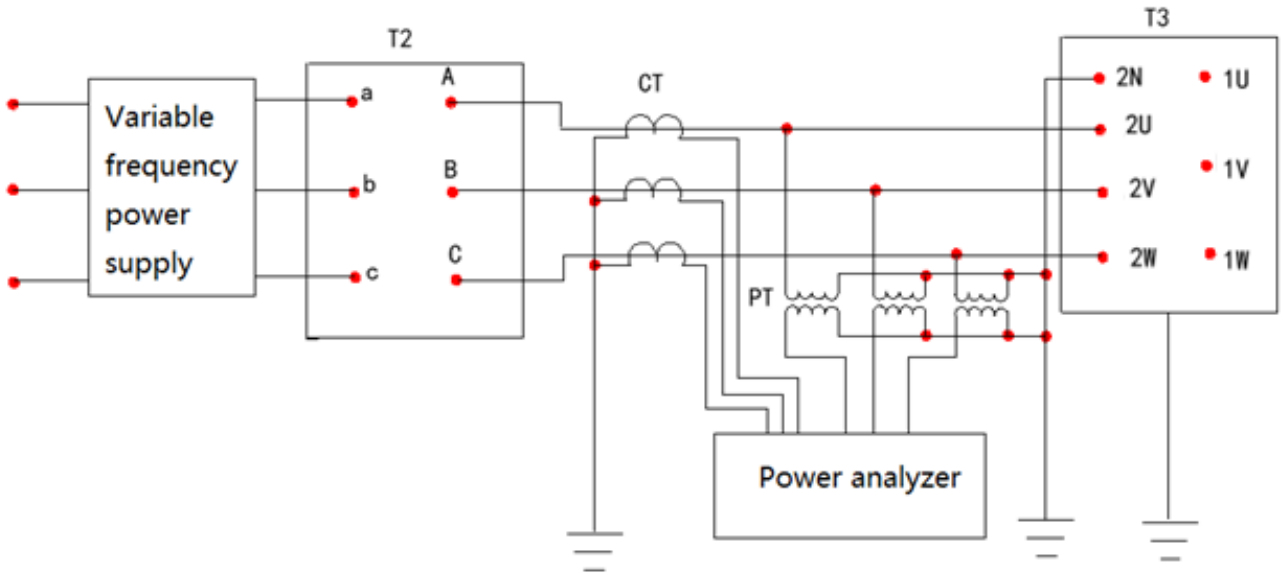

T2	Step-up transformer	T3	Transformer tested
PT	Voltage transformer	CT	Coupling capacitance
Induced voltage withstand test system			

Procedure

The induced voltage withstand test was carried out by applying a three-phase AC voltage of 200 Hz across three terminals of the low voltage windings. Therefore the voltage is induced on the HV terminals. The applied voltage shall be lasted for 30 s.

The tap position was on position 3 during the test.

The test shall commence at a voltage not greater than one-third of the specified test value, and the voltage shall be increased to the test value as rapidly as is consistent with measurement.
At the end of the test, the voltage shall be reduced rapidly to less than one-third of the test value before switching off.

Test data

Induced voltage withstand test					
Tapping position	Test voltage	Induced vlotage	Induced ratio	Frequency	Duration
	LV	HV side			
	[V]	[kV]	-	[Hz]	[s]
3	840.1	44.0	2	200.0	30
Supplement information: N/A					

Result
Passed, no collapse of test voltage occurred during the induced voltage test.

Test photograph

3.7 Leak testing with pressure for liquid immersed transformers (tightness test)

Standard and date

Standard	Subclause 11.8 of IEC 60076-1
Test date	2025-05-26~2025-05-27

Environmental conditions

Ambient temperature	25.7~26.1 ℃
Ambient air pressure	100.9~101.2 kPa
Relative humidity	31%~35%

Characteristic test data

Serial number of distribution transformer	BY04001
Applied pressure	30 kPa
Pressure duration	8

Requirement

No leakage to the transformer tank.

Procedure

The following leak tests were carried out:

a. Transformer was complete as in service.

b. Applied pressure with 30 kPa in the transformer tank, and maintained for 8 h.

c. After testing, visual inspection should be done.

Test data

Leak testing with pressure for liquid immersed transformers (tightness test)			
Test method	Applied pressure [kPa]	Residual pressure [kPa]	Pressure duration [h]
Filling gas method	30.02	30.01	8
Supplement information:			

Result

Passed, no leakage to the transformer tank.

Test photograph

4 Special tests

4.1 Short-circuit withstand test

Standard and date

Standard	IEC 60076-5
Test date	2025-05-29

Environmental conditions

Ambient temperature	27.4 ℃
Ambient air pressure	101.3 kPa
Relative humidity	36%

Characteristic test data

Serial number of distribution transformer	BY04001
Rated power of transformer	1600 kVA
Category of transformer	Category I
Short-circuit apparent power of the system	500 MVA
Symmetrical short-circuit current	Refer to table 1
Amplitude of the first peak of the asymmetrical test current	Refer to table 1
Peak value	Refer to table 1

Short-circuit current shall be calculated as follows:
$I=U/[\sqrt{3}\times(Zt+Zs)]$ (kA)
Where,
Zs is the short-circuit impedance of system.
Zt is the short-circuit impedance of the transformer referred to the winding under consideration
U is the rated voltage Ur of the winding, in kilovolts (kV)

$Zs=Us^2/S$, in ohms (Ω) per phase
Where,
S is the short-circuit apparent power of the system, in megavoltamperes (MVA)
Us is the rated voltage of the system, in kilovolts (kV)

$Zt=zt\times Ur^2/(100\times Sr)$, in ohms (Ω) per phase
Where,
zt is the measured short-circuit impedance at rated current and frequency at the principal tap and at reference temperature, as a percentage.
Sr is the rated power of the transformer, in megavoltamperes (MVA)

The amplitude $\hat{\imath}$ of the first peak of the asymmetrical test current is calculated as follows:
$\hat{\imath} = I\times k\times\sqrt{2}$
Where,
I is the symmetrical short-circuit current
The factor $k\times\sqrt{2}$, or peak factor, depends on the ratio X/R
Where,
X is the sum of the reactances of the transformer and system (Xt+Xs), in ohms (Ω)
R is the sum of resistances of the transformer and the system (Rt+Rs), in ohms (Ω)

Values for factor k×√2

X/R	1	1.5	2	3	4	5	6	8	10	14
k×√2	1.51	1.64	1.76	1.95	2.09	2.19	2.27	2.38	2.46	2.55
For other values of X/R between 1 and 14, the factor k×√2 may be determined by linear interpolation.										

Calculation of short-circuit current – Table 1

Tap position	Peak current [A]	Symmetrical test current [A]	Factor (K√2)
1	1538(1±5%)	633(1±10%)	2.43
3	1631(1±5%)	674(1±10%)	2.42
5	1750(1±5%)	726(1±10%)	2.41

Remark:

1) The system short-circuit impedance is equal to or less than 5% of the transformer's short-circuit impedance, so the system short-circuit impedance is neglected in the calculation of short-circuit current.

Requirement

1) The result of the short-circuit tests and the measurements and checks performed during tests do not reveal any condition of faults.

2) The dielectric tests and other routine tests when applicable, have been successfully repeated and the lightning impulse test, if specified, successfully performed.

3) The out-of-tank inspection does not reveal any defects such as displacements, shift of laminations, deformation of windings, connections or supporting structures, so significant that they might endanger the safe operation of the transformer.

4) No traces of internal electrical discharge are found.

5) On the request of manufacturer, all the reactance change rates shall be in ±7.5% before and after short-circuit withstand test.

Short-circuit withstand test circuit

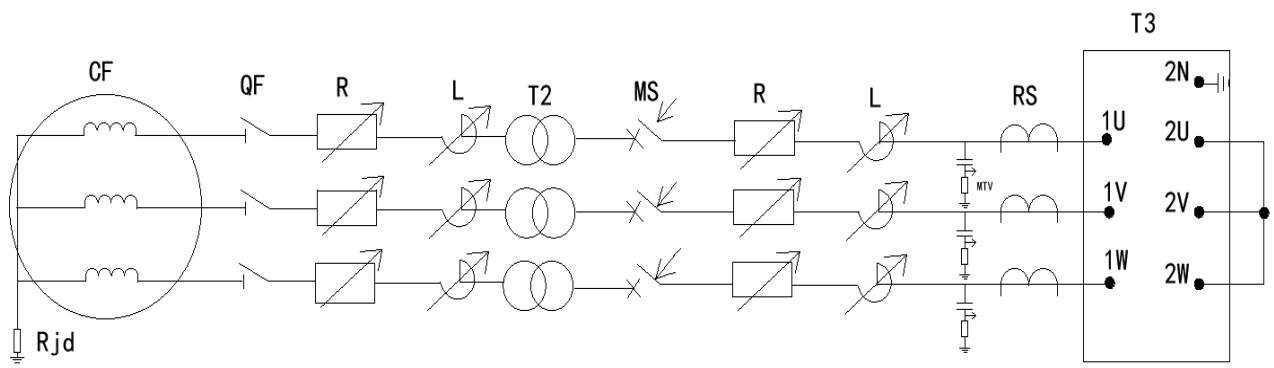

T1	Transformer	T2	Short-circuit transformer
T3	Transformer tested	QF	High voltage disconnector
R	Adjustable HV resistance	L	Adjustable HV reactor
RS	Current transformer	MTV	Voltage divider
MS	Closing switch		
Short-circuit withstand test system			

Procedure

Prior to the short-circuit tests, the transformer had already conducted to the routine tests, for details to see chapter 3 routine tests in this report.

At the beginning of short-circuit tests, the average temperature of the winding shall be between 10 ℃ and 40 ℃.

The reactance of each winding shall be performed before the short-circuit withstand test.

Three-phase supply was connected to the HV terminals, the LV terminals were shorted by copper bar. The short-circuit current shall be applied to the transformer with the tap positioning 1, 3, 5 separately.

For categories I three-phase transformers, the total number of tests shall be nine, three tests on each phase.

Arrangement photograph before testing

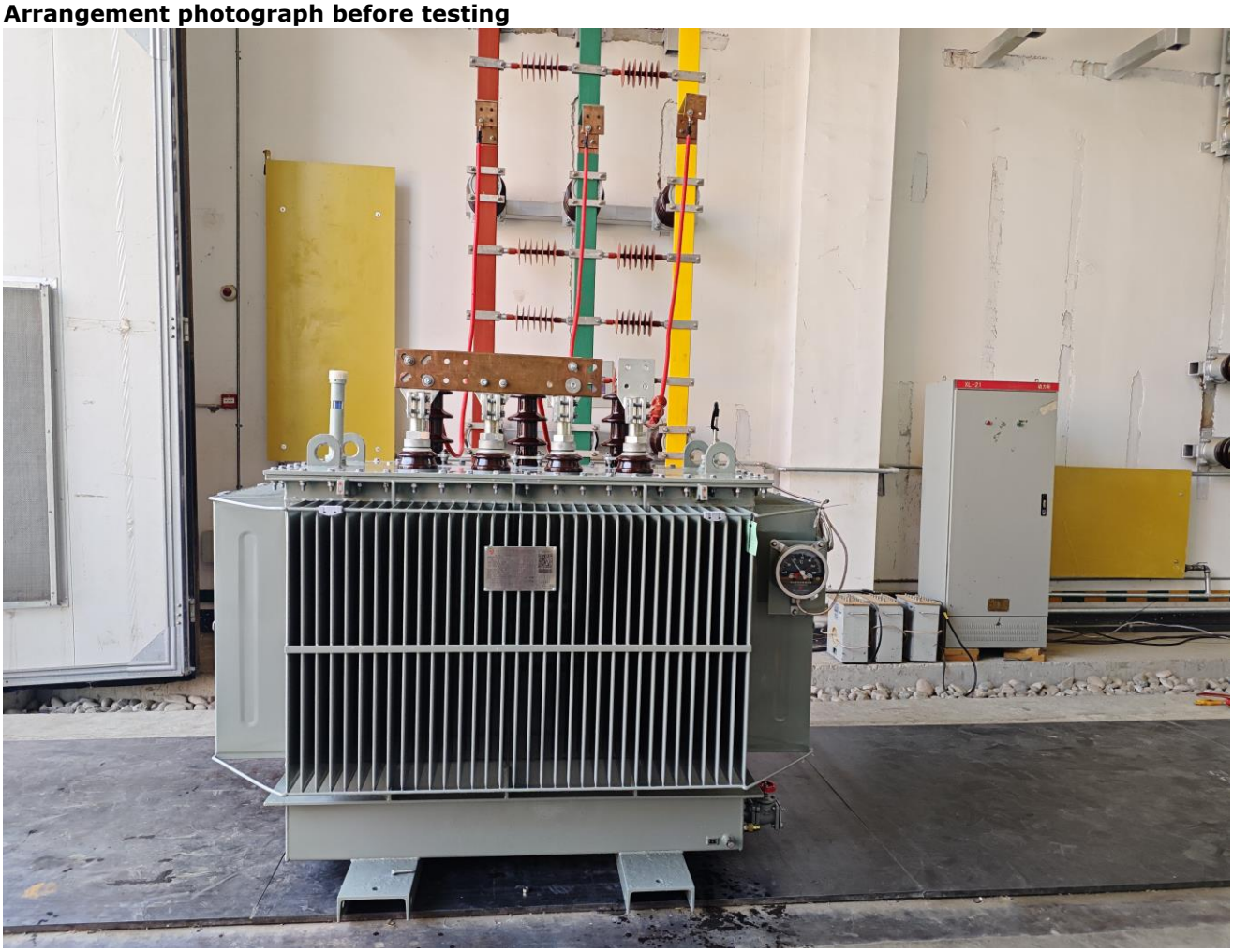

Reactance test data

Measurement of winding Reactance						
Winding	Tap position	Test condition	Measured value [Ω]			Short-circuit oscillogram
			1U	1V	1W	
HV	1	Before short-circuit test	20.945	20.976	21.006	--
		1st short-circuit test	20.991	21.039	21.087	B1
		Reactance change rate	0.22	0.30	0.39	--
		2nd short-circuit test	21.022	21.046	21.102	B2
		Reactance change rate	0.37	0.33	0.46	--
		3rd short-circuit test	21.014	21.063	21.114	B3
		Reactance change rate	0.33	0.41	0.51	--
		Required reactance change rate	≤7.5%			
	3	Before short-circuit test	18.722	18.749	18.776	--
		1st short-circuit test	18.809	18.887	18.934	B4
		Reactance change rate	0.46	0.74	0.84	--
		2nd short-circuit test	18.825	18.922	18.966	B5
		Reactance change rate	0.55	0.92	1.01	--
		3rd short-circuit test	18.860	18.954	18.991	B6
		Reactance change rate	0.74	1.09	1.14	--
		Required reactance change rate	≤7.5%			
	5	Before short-circuit test	16.501	16.515	16.528	--
		1st short-circuit test	16.662	16.709	16.798	B7
		Reactance change rate	0.98	1.17	1.63	--
		2nd short-circuit test	16.627	16.721	16.856	B8
		Reactance change rate	0.76	1.25	1.98	--
		3rd short-circuit test	16.684	16.730	16.907	B9
		Reactance change rate	1.11	1.30	2.29	--
		Required reactance change rate	≤7.5%			

Short-circuit withstand test data and oscillogram

Short-circuit withstand test – B1

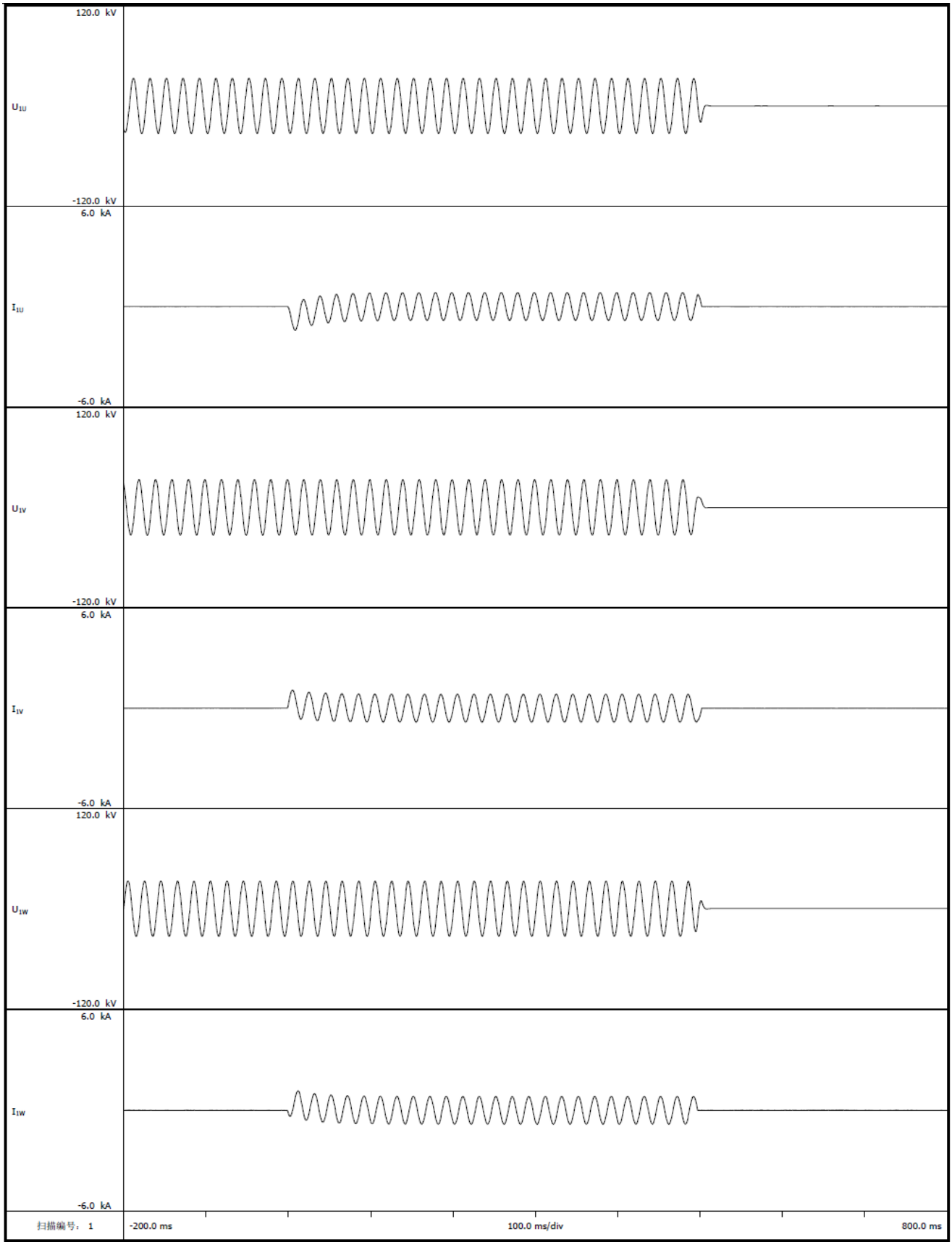

Short-circuit withstand test – B1

Test Parameters				
Phase/line	--	1U	1V	1W
Tapping position of HV side	--	Tap position 1		
Applied voltage, line value	kV	18.93	19.86	19.27
Current, peak	A	1559	1169	1236
Current value, r.m.s	A	638	641	639
Current duration	ms	498		

Remarks:

a. The out-of-tank inspection does not reveal any defects such as displacements, shift of laminations, deformation of windings, connections or supporting structures, so significant that they might endanger the safe operation of the transformer.

b. All the reactance change rates were in ±7.5% after 1st short-circuit withstand test.

Short-circuit withstand test – B2

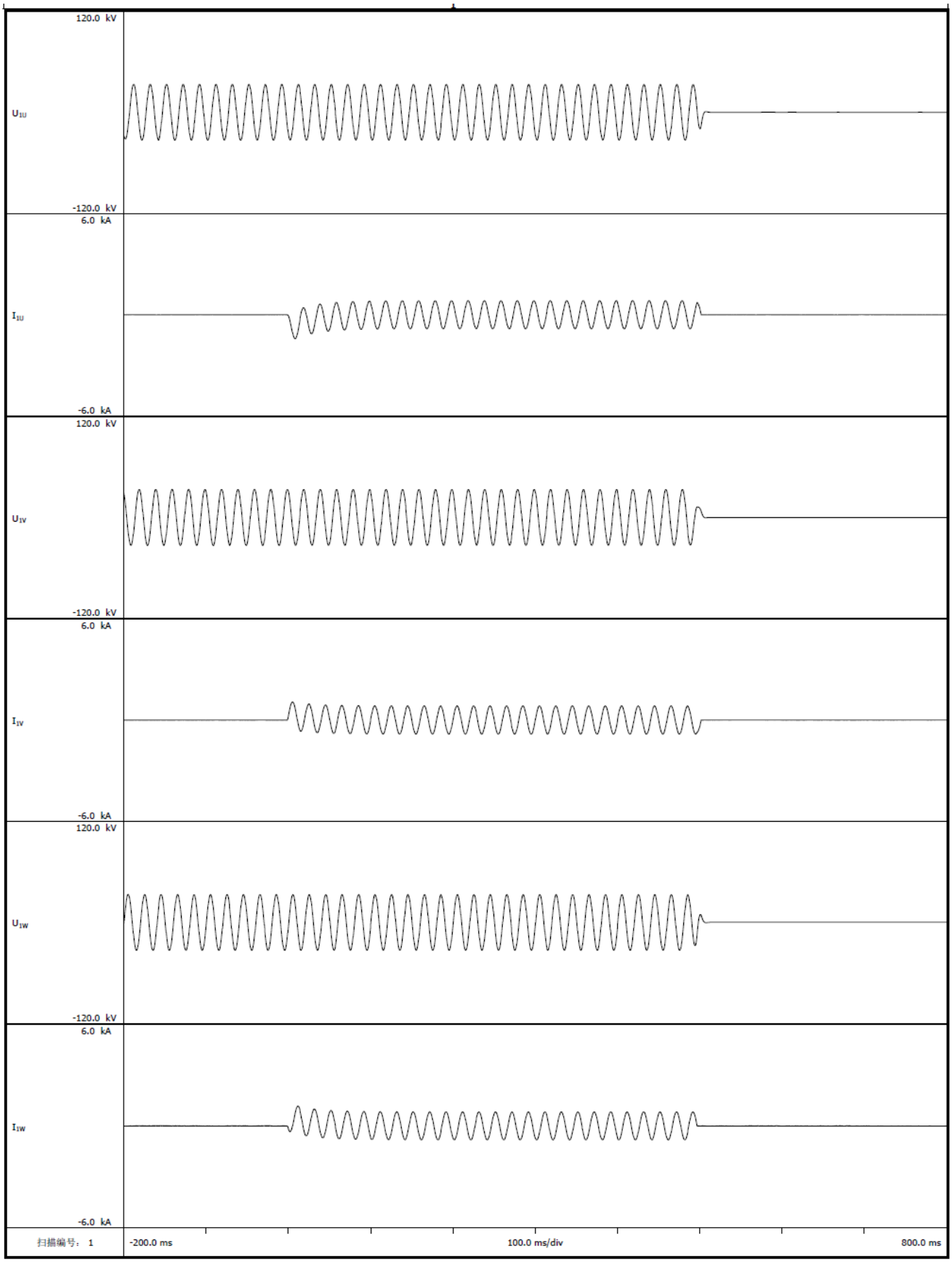

Short-circuit withstand test – B2

Test Parameters				
Phase/line	--	1U	1V	1W
Tapping position of HV side	--	Tap position 1		
Applied voltage, line value	kV	18.95	19.42	19.49
Current, peak	A	1568	1147	1255
Current value, r.m.s	A	642	644	643
Current duration	ms	497		

Remarks:

a. The out-of-tank inspection does not reveal any defects such as displacements, shift of laminations, deformation of windings, connections or supporting structures, so significant that they might endanger the safe operation of the transformer.

b. All the reactance change rates were in ±7.5% after 2nd short-circuit withstand test.

Short-circuit withstand test – B3

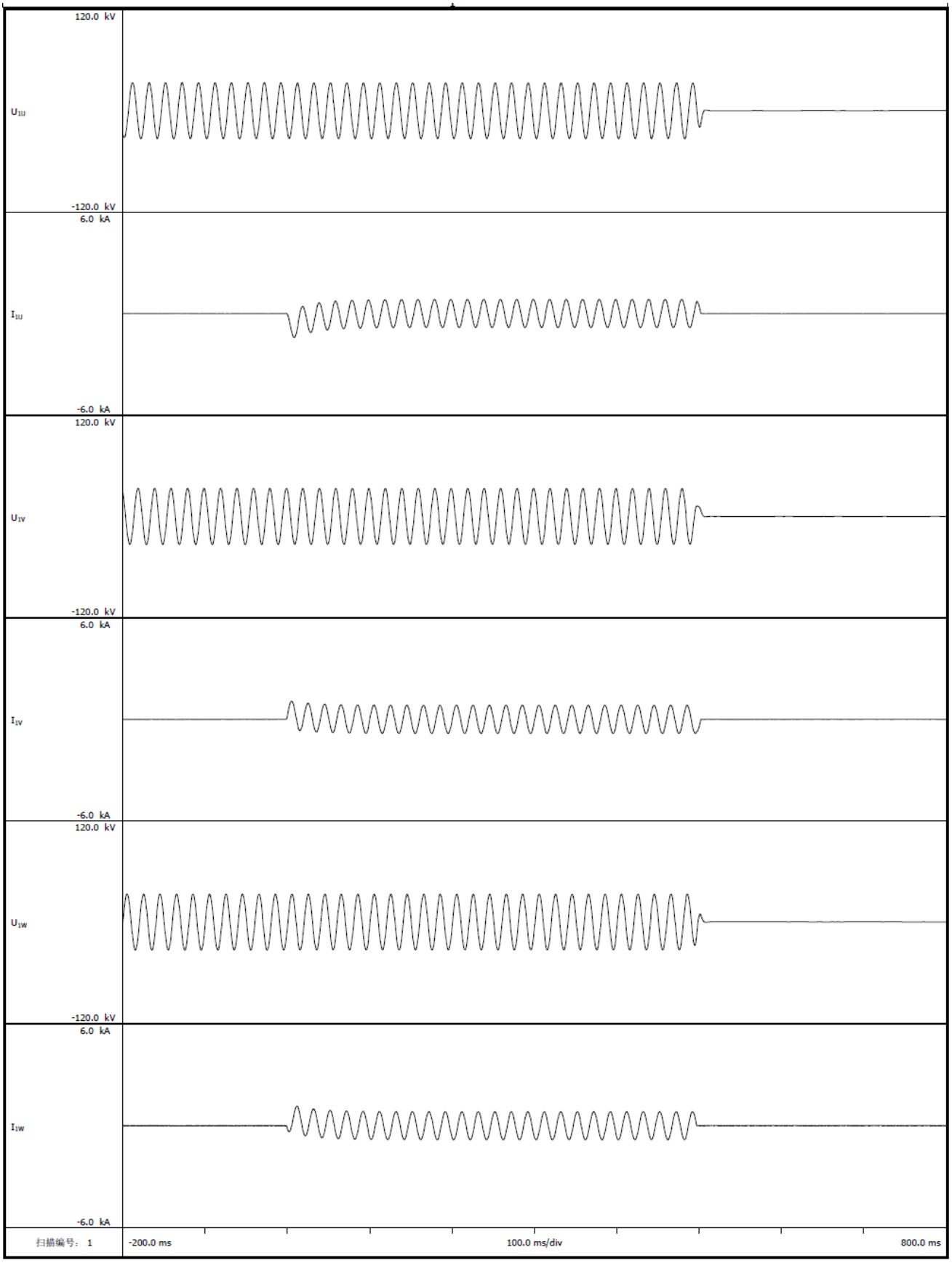

Short-circuit withstand test – B3

Test Parameters				
Phase/line	--	1U	1V	1W
Tapping position of HV side	--	Tap position 1		
Applied voltage, line value	kV	19.73	19.99	19.86
Current, peak	A	1576	1237	1373
Current value, r.m.s	A	646	652	648
Current duration	ms	497		

Remarks:

a. The out-of-tank inspection does not reveal any defects such as displacements, shift of laminations, deformation of windings, connections or supporting structures, so significant that they might endanger the safe operation of the transformer.

b. All the reactance change rates were in ±7.5% after 3rd short-circuit withstand test.

Short-circuit withstand test – B4

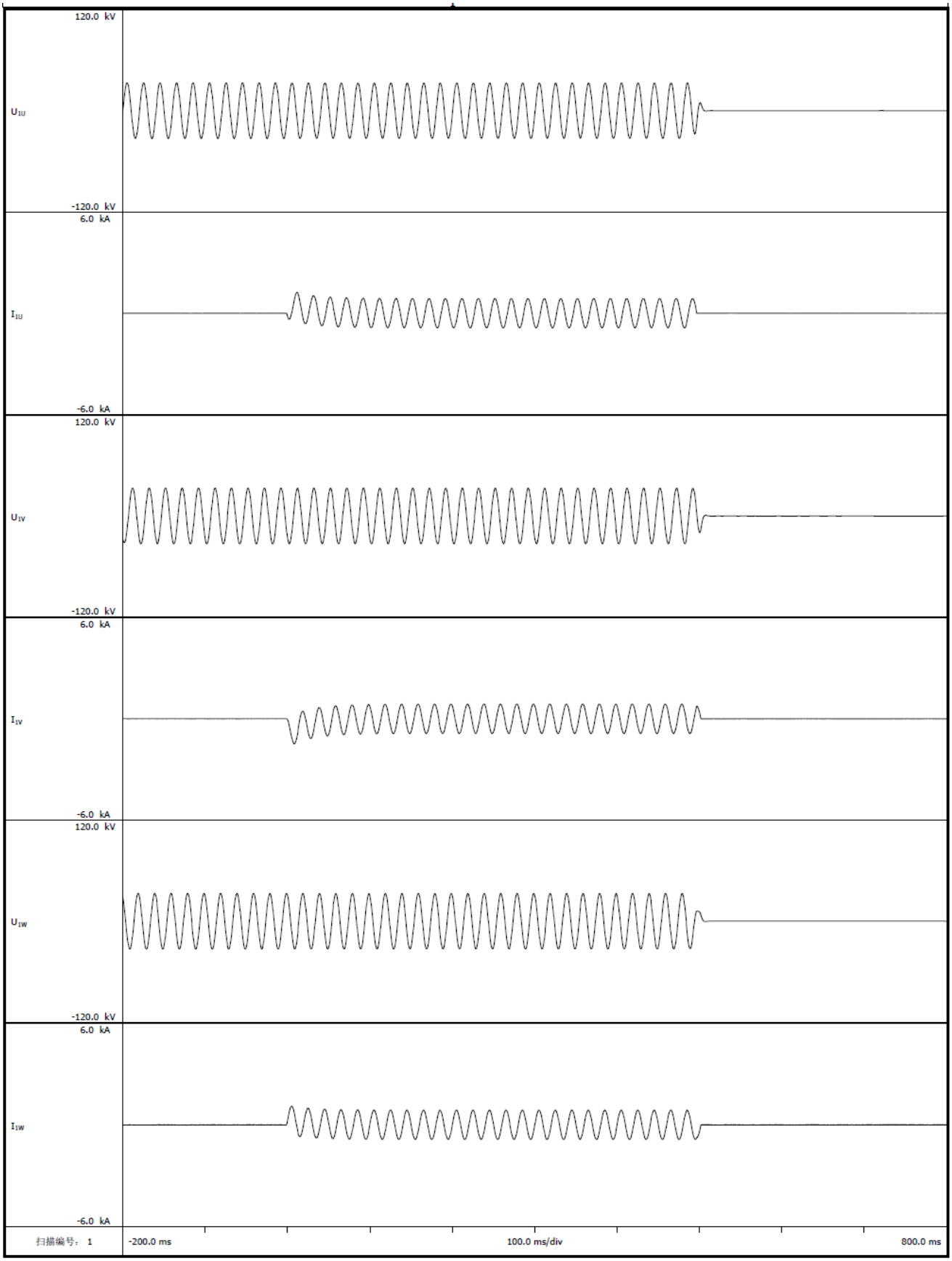

Short-circuit withstand test – B4

Test Parameters				
Phase/line	--	1U	1V	1W
Tapping position of HV side	--	Tap position 3		
Applied voltage, line value	kV	19.88	19.62	18.62
Current, peak	A	1436	1667	1309
Current value, r.m.s	A	677	681	679
Current duration	ms	489		

Remarks:

a. The out-of-tank inspection does not reveal any defects such as displacements, shift of laminations, deformation of windings, connections or supporting structures, so significant that they might endanger the safe operation of the transformer.

b. All the reactance change rates were in ±7.5% after 1st short-circuit withstand test.

Short-circuit withstand test – B5

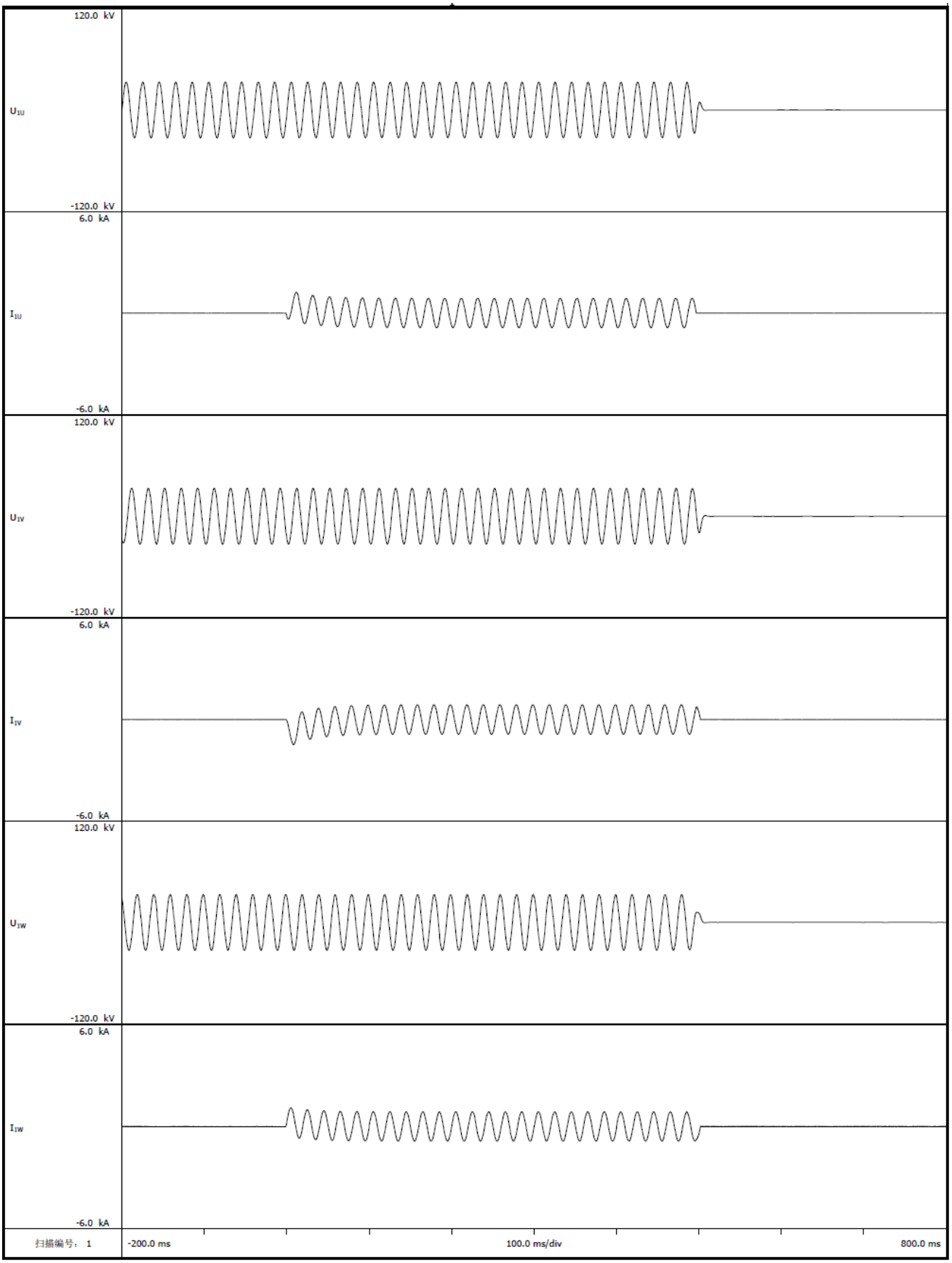

Short-circuit withstand test – B5

Test Parameters				
Phase/line	--	1U	1V	1W
Tapping position of HV side	--	Tap position 3		
Applied voltage, line value	kV	19.11	19.19	20.16
Current, peak	A	1394	1675	1281
Current value, r.m.s	A	688	685	686
Current duration	ms	489		

Remarks:

a. The out-of-tank inspection does not reveal any defects such as displacements, shift of laminations, deformation of windings, connections or supporting structures, so significant that they might endanger the safe operation of the transformer.

b. All the reactance change rates were in ±7.5% after 2nd short-circuit withstand test.

Short-circuit withstand test – B6

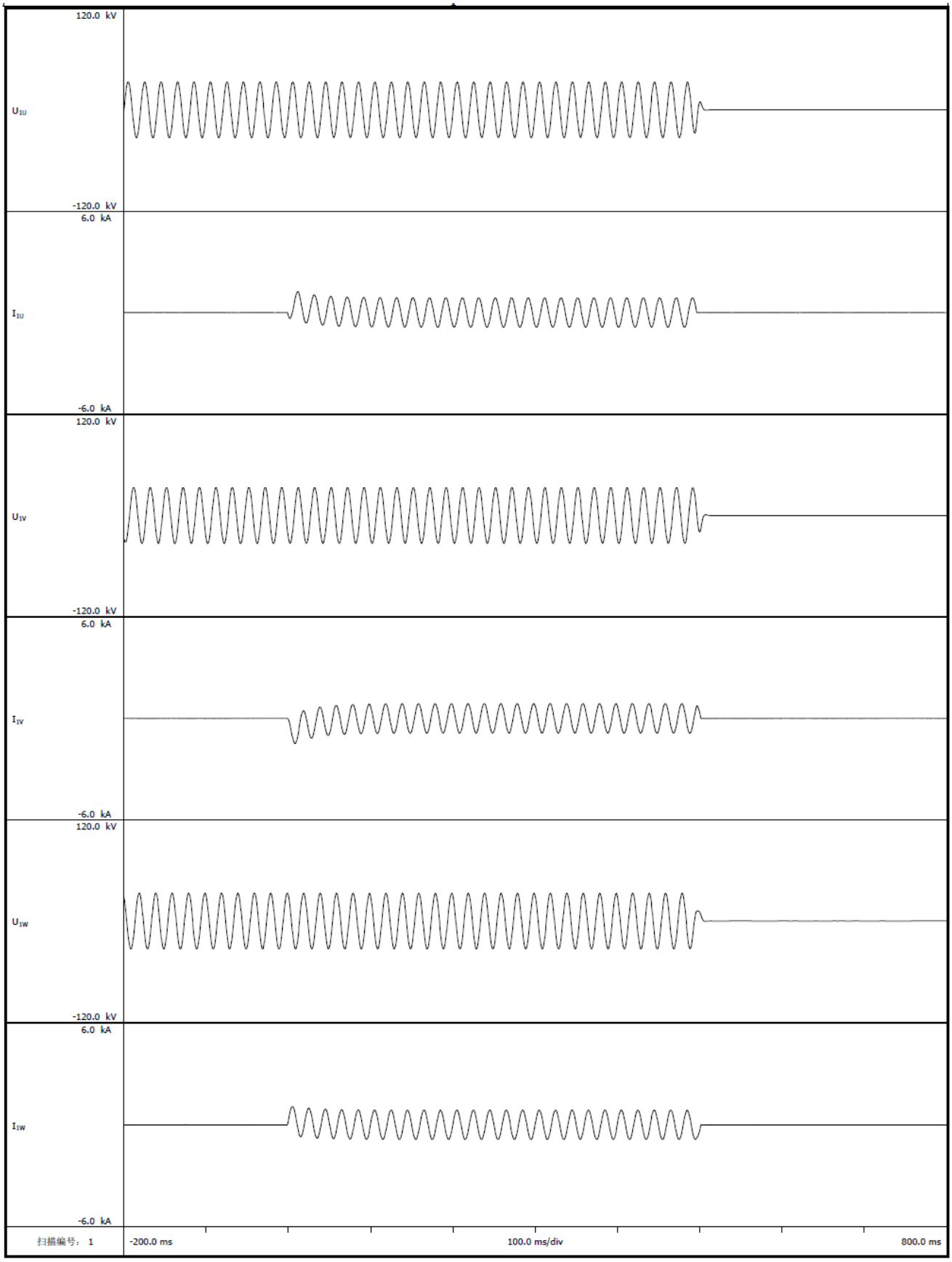

Short-circuit withstand test – B6

Test Parameters				
Phase/line	--	1U	1V	1W
Tapping position of HV side	--	Tap position 3		
Applied voltage, line value	kV	19.28	19.64	20.87
Current, peak	A	1425	1679	1268
Current value, r.m.s	A	689	688	686
Current duration	ms	489		

Remarks:

a. The out-of-tank inspection does not reveal any defects such as displacements, shift of laminations, deformation of windings, connections or supporting structures, so significant that they might endanger the safe operation of the transformer.

b. All the reactance change rates were in ±7.5% after 3rd short-circuit withstand test.

Short-circuit withstand test – B7

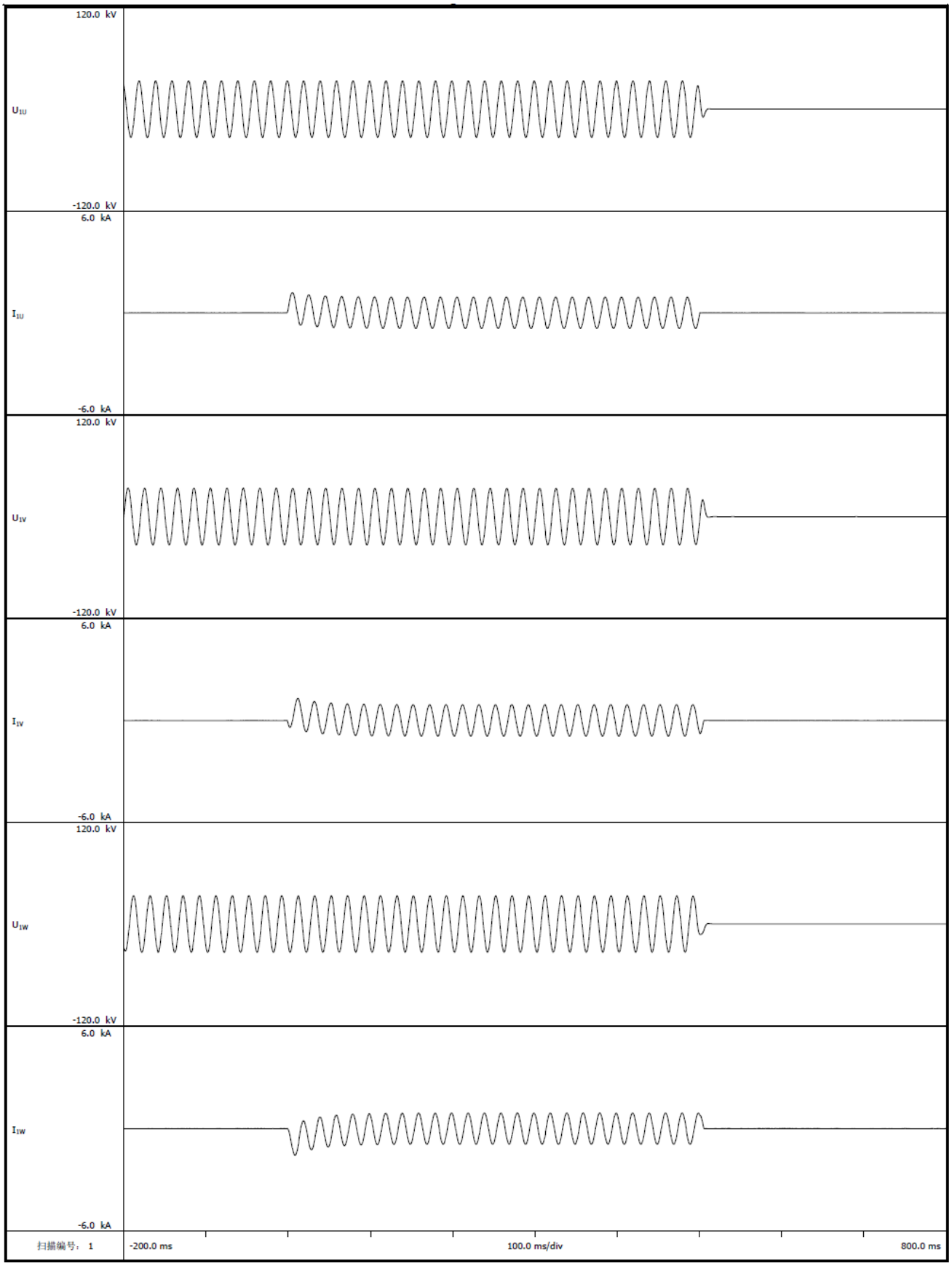

Short-circuit withstand test – B7

Test Parameters				
Phase/line	--	1U	1V	1W
Tapping position of HV side	--	Tap position 5		
Applied voltage, line value	kV	19.69	19.87	20.22
Current, peak	A	1396	1511	1774
Current value, r.m.s	A	733	735	732
Current duration	ms	499		

Remarks:

a. The out-of-tank inspection does not reveal any defects such as displacements, shift of laminations, deformation of windings, connections or supporting structures, so significant that they might endanger the safe operation of the transformer.

b. All the reactance change rates were in ±7.5% after 1st short-circuit withstand test.

Short-circuit withstand test – B8

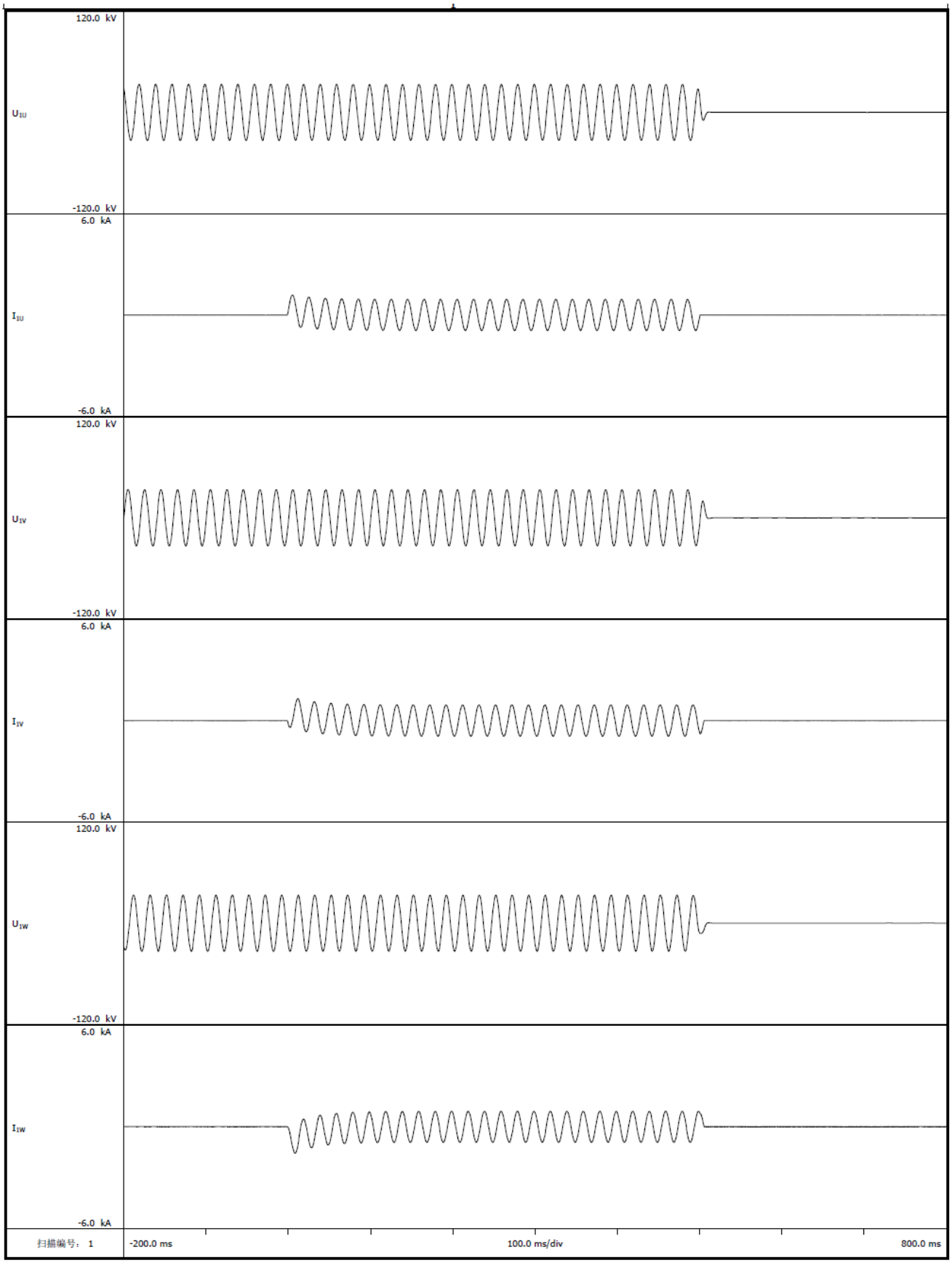

Short-circuit withstand test – B8

Test Parameters				
Phase/line	--	1U	1V	1W
Tapping position of HV side	--	Tap position 5		
Applied voltage, line value	kV	19.87	20.02	19.94
Current, peak	A	1296	1322	1781
Current value, r.m.s	A	736	738	735
Current duration	ms	499		

Remarks:

a. The out-of-tank inspection does not reveal any defects such as displacements, shift of laminations, deformation of windings, connections or supporting structures, so significant that they might endanger the safe operation of the transformer.

b. All the reactance change rates were in ±7.5% after 2nd short-circuit withstand test.

Short-circuit withstand test – B9

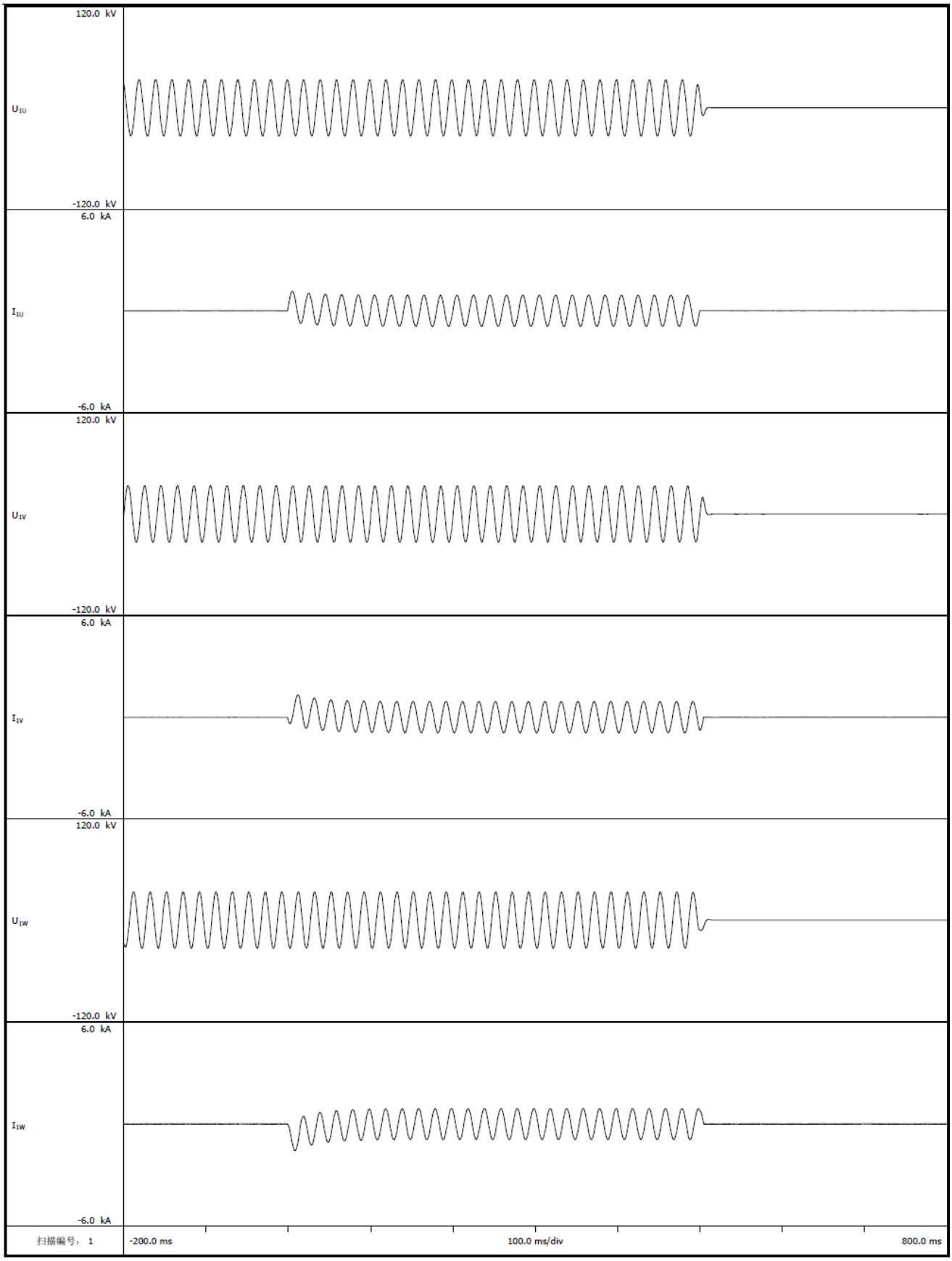

Short-circuit withstand test – B9

Test Parameters				
Phase/line	--	1U	1V	1W
Tapping position of HV side	--	Tap position 5		
Applied voltage, line value	kV	19.95	19.67	19.88
Current, peak	A	1277	1436	1788
Current value, r.m.s	A	738	742	739
Current duration	ms	498		

Remarks:

a. The out-of-tank inspection does not reveal any defects such as displacements, shift of laminations, deformation of windings, connections or supporting structures, so significant that they might endanger the safe operation of the transformer.

b. All the reactance change rates were in ±7.5% after 3rd short-circuit withstand test.

Result

Passed.

1) The result of the short-circuit tests and the measurements and checks performed during tests did not reveal any condition of faults.

2) The dielectric tests and other routine tests when applicable, had been successfully repeated and the lightning impulse test had been successfully performed.

3) The out-of-tank inspection did not reveal any defects such as displacements, shift of laminations, deformation of windings, connections or supporting structures, so significant that they might endanger the safe operation of the transformer.

4) No traces of internal electrical discharge were found.

5) All the reactance change rates were in ±7.5% before and after short-circuit withstand test.

Test photograph after testing

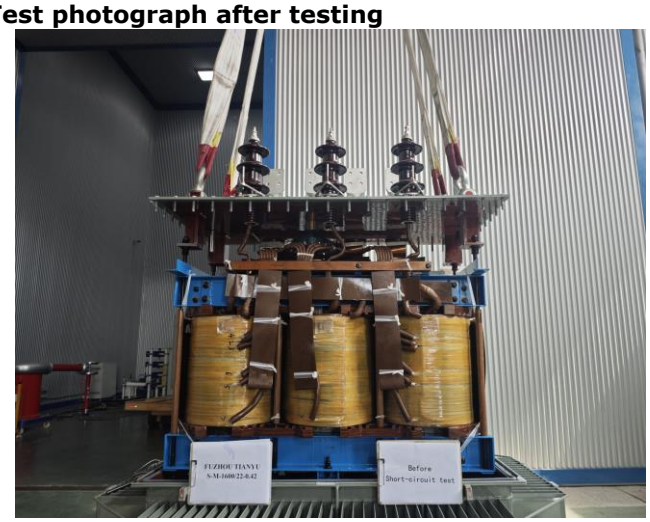

HV side winding before short-circuit test

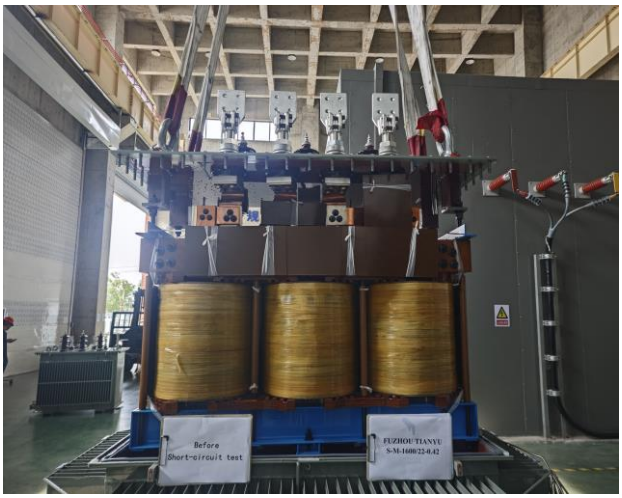

LV side winding before short-circuit test

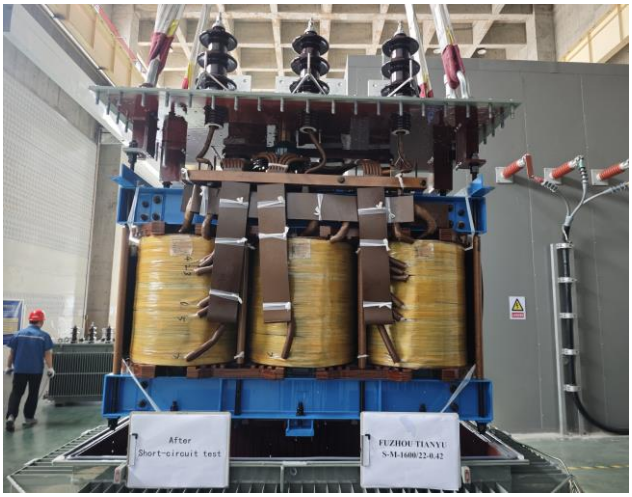

HV side winding after short-circuit test

LV side winding after short-circuit test

4.2 Special test (endurance test) for corrugated tank

Standard and date

Standard	EN 50464-4
Test date	2025-05-31~2025-06-02

Environmental conditions

Ambient temperature	26.5 ℃
Ambient air pressure	101.1 kPa
Relative humidity	38%

Characteristic test data

Serial number of distribution transformer	BY04001
Applied pressure volume (overpressure/under pressure)	0.034/0.028 m^3
Overpressure/under pressure	20.04/-16.99 kPa

Requirement

a. The corrugated tank shall be subjected to 2000 cycles with overpressure and underpressure. A minimum cycle duration is 60 s.
b. After the endurance test, the same tank shall be subjected to a 24 h static leakage test with overpressure 1.2 times the maximum value recored during the endurance test.
c. No leakage to the tank.
d. No cracks to the tank.
e. No heavy and unexplained discrepancies on the pressure readings before, during and after the test.

Procedure

Calculation of the volume variation
The liquid volume change from the relaxed stage at the sealing temperature shall be calculated using a volume expansion coefficient given by suppliers and generlly equal to 7.5 $\times 10^{-4}$ (±) K^{-1} for mineral oil.
Calculation of overpressure and underpressure.
The tank shall be subjected to 2000 cycles with overpressure and under pressure. Each cycle comprise one overpressure and one under pressure. To achieve the overpressure and underpressure, the volume of liquid calculated shall be added to and extracted from the tank in the quantity calculated. The pressure P+ and P- shall be recorded during the test at intervals.
The reading of the manometer with the tank relaxed shall be recorded before (P0) and after the test (P1) and the tank shall be topped up with liquid to reach the initial relaxing pressure P0. If requested for the test evaluation, the added volume shall be recorded.
After the endurance test, the same tank shall be subjected to a 24 h static leakage test with an overpressure 1.2 times the maximum value recorded during the endurance test.

Test data

Endurance test for corrugated tank			
Overpressure [kPa]	Underpressure [kPa]	One cycle duration [s]	Total cycle number
20.04	-16.99	60	2000

Leakage test after endurance test for corrugated tank		
Applied pressure [kPa]	Pressure duration [h]	Result
24.27	24	No leakage after test

Result

Passed.

a. The corrugated tank was subjected to 2000 cycles with overpressure and underpressure. A minimum cycle duration was 120 s.

b. After the endurance test, the same tank was subjected to a 24 h static leakage test with overpressure 1.2 times the maximum value recored during the endurance test.

c. No leakage to the tank.

d. No cracks to the tank.

e. No heavy and unexplained discrepancies on the pressure readings before, during and after the test.

4.3 Induced voltage test with partial discharge measurement

Standard and date

Standard	Subclause 11.3 of IEC 60076-3
Test date	2025-05-27

Environmental conditions

Ambient temperature	26.1 ℃
Ambient air pressure	101.2 kPa
Relative humidity	27%

Characteristic test data

Serial number of power transformer	BY04001
Tap position	Principal tap (3)
Voltage applied position	Low voltage winding
Test frequency	200 Hz

Requirement

a. The measured background PD level does not exceed 50 pC at both the beginning and the end of the test.
b. No collapse of the test voltage occurs.
c. None of the PD levels recorded during the one hour period exceed 250 pC;
d. The PD levels measured during the one hour period do not exhibit any rising trend and no sudden sustained increase in the levels occur during the last 20 min of the test;
e. The measured PD levels during the one hour period do not increase by more than 50 pC;
f. The PD level measured at a voltage level of 1.2×Ur/√3 after the one hour period does not exceed 100 pC.

Partial discharge test circuit

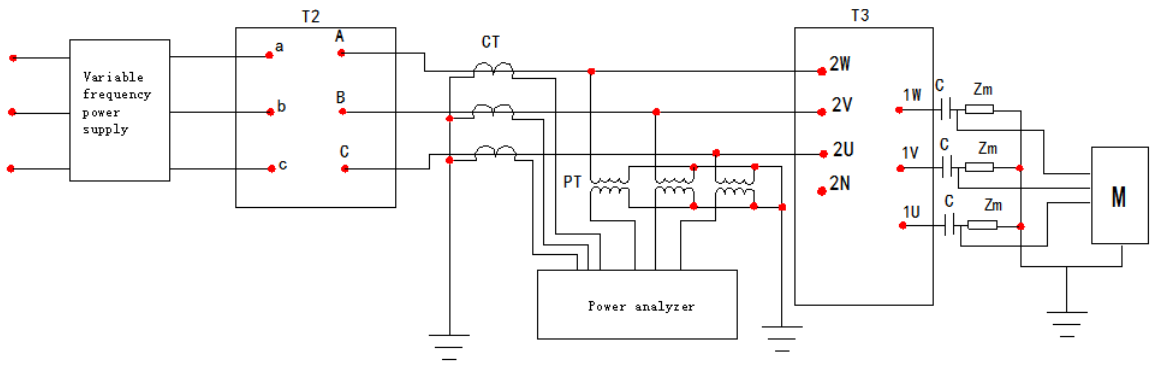

T2	Step-up transformer	T3	Transformer tested
PT	Voltage transformer	C	Coupling capacitance
Zm	Measuring impedance	M	Multi-channel digital partial discharge comprehensive analyer
CT	Current transformer		

Induced voltage test with partial discharge test system

Procedure

The induced voltage withstand test was carried out by applying a three-phase AC voltage of 200 Hz across three terminals of the low voltage windings. Therefore the voltage is induced on the HV terminals.

The tap position was on position 3 during the test.

The partial discharge test sequence shall be as follows:

a. The voltage shall be switched on at a voltage not higher than 0.4×Ur/√3.

b. The voltage shall be raised to 0.4×Ur/√3 and background PD level shall be measured and recorded.

c. The voltage shall be raised to 1.2×Ur/√3 and held there for a minimum duration of 1 min and only long enough to make a stable PD measurement.

d. Measured and recorded the PD level.

e. The voltage shall be raised to the one hour PD measurement voltage (1.58×Ur/√3) and held there for a minimum duration of 5 min and only long enough to make a stable PD measurement.

f. Measured and recorded the PD level.

g. The voltage shall be raised to the enhancement voltage (1.8×Ur/√3) and held there for 30 s.

h. Immediately after the test time, the voltage shall be reduced without interruption to the one hour PD level measurement voltage (1.58×Ur/√3).

i. Measured and recorded the PD level.

j. The voltage shall be held at the one hour PD measurement voltage (1.58×Ur/√3) for a duration of at least one hour following the PD measurement.

k. The PD level shall be measured and recorded every 5 min during the one hour period.

l. After the last PD measurement in the one hour period the voltage shall be reduced to 1.2×Ur/√3 and held there for a minimum duration of 1 min and only long enough to make a stable PD measurement.

m. Measured and recored the PD level.

n. The voltage shall be reduced to 0.4×Ur/√3 and the background PD level shall be measured and recorded.

o. The voltage shall be reduced to a value below 0.4×Ur/√3.

p. The voltage shall be switched off.

The main diagram of the test sequence are shown in figure 1

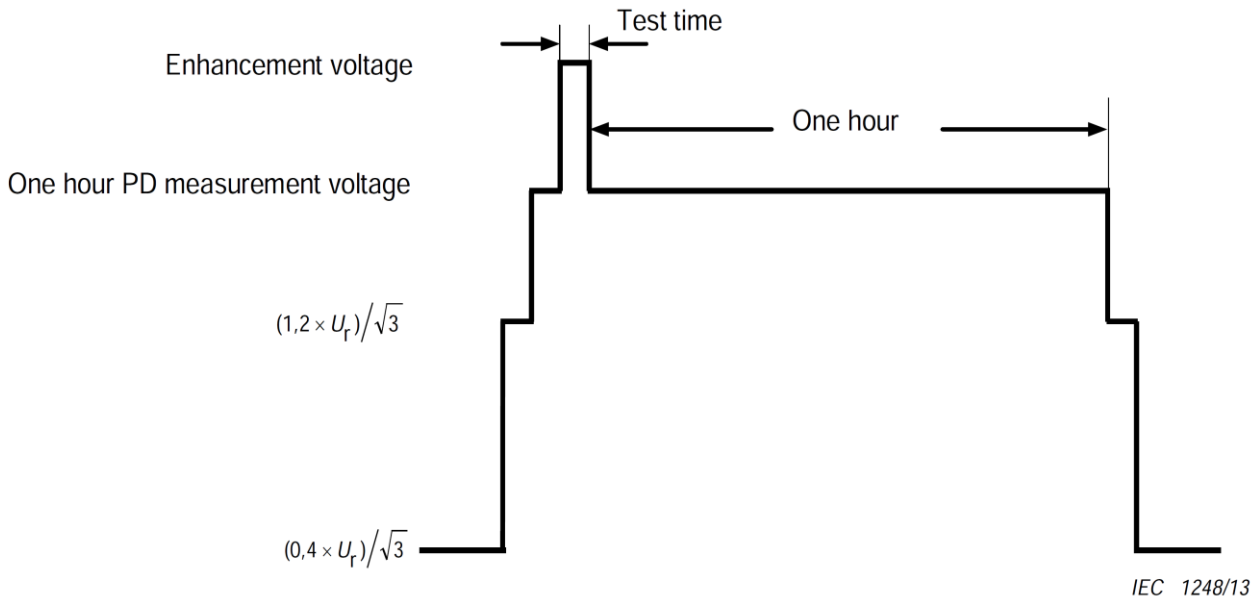

Figure 1 – Main diagram of the test sequence

The partial discharge level shall be continuously observed on at least one measuring channel for the entire duration of the test.

Test data

Measured value of partial discharge							
Frequency	Applied vlotage (line value)		Voltage duration	Partial discharge quantity			
				Measured value			Required value
[Hz]	[V]	[V]	[s]	Phase A [pC]	Phase B [pC]	Phase C [pC]	[pC]
200	168.2	0.4Ur	--	<18	<19	<20	≤50
	504.3	1.2Ur	60	<22	<23	<23	≤100
	663.7	1.58Ur	300	<26	<26	<27	≤250
	756.2	1.8×Ur	30	--	--	--	--
	663.7	1.58Ur	300	<34	<35	<36	≤250
			600	<33	<34	<35	
			900	<32	<33	<33	
			1200	<31	<33	<32	
			1500	<31	<32	<31	
			1800	<30	<31	<30	
			2100	<29	<30	<30	
			2400	<29	<29	<29	
			2700	<28	<28	<28	
			3000	<27	<28	<28	
			3300	<26	<27	<27	
			3600	<26	<27	<27	
	504.2	1.2Ur	60	<21	<23	<22	≤100
	168.1	0.4Ur	--	<18	<18	<19	≤50
Supplement information: N/A							

Result

Passed

a. The measured background PD level does not exceed 50 pC at both the beginning and the end of the test.

b. No collapse of the test voltage occurs.

c. None of the PD levels recorded during the one hour period exceed 250 pC;

d. The PD levels measured during the one hour period did not exhibit any rising trend and no sudden sustained increase in the levels occur during the last 20 min of the test;

e. The measured PD levels during the one hour period did not increase by more than 50 pC;

f. The PD level measured at a voltage level of 1.2×Ur/√3 after the one hour period did not exceed 100 pC.

g. No collapse of test voltage occurred during the induced voltage test.

Test photograph

4.4 Measurement of dissolved gasses in dielectric liquid

Standard and date

Standard	Subclause 11.1.4 n) of IEC 60076-1
Test date	2025-05-27, 2025-05-29 and 2025-05-31

Environmental conditions

Ambient temperature	26.1 / 27.1 / 27.2 ℃
Ambient air pressure	101.2 / 101.1 / 101.4 kPa
Relative humidity	27% / 38% / 35%

Characteristic test data

Serial number of power transformer	BY04001

Requirement

Rate of dissolved gasses in dielectric liquid are for reference.

Procedure

Oil samples were taken before and after temperature-rise, after lightning impluse test. The samples of oil were taken for dissolved gas analysis (DGA).

Test data

Dissolved gas analysis								
Gas components [UL/L]	H_2	CO	CO_2	CH_4	C_2H_4	C_2H_6	C_2H_2	Overall hydrocarbon content
Before temperature-rise test (2025-05-27)	18.26	1.92	197.98	11.78	0	0	0	11.78
After temperature-rise test (2025-05-29)	18.30	1.95	198.10	11.81	0	0	0	11.81
After lightning impluse test (2025-05-31)	18.35	1.96	198.16	11.86	0	0	0	11.86
Supplement information: N/A								

Result

The test results are for information only.

4.5 Breakdown voltage, dissipation factor and water content measurement for dielectric liquid

Standard and date

Standard	Required by manufacturer
Test date	2025-05-27

Environmental conditions

Ambient temperature	26.1 ℃
Ambient air pressure	101.2 kPa
Relative humidity	27%

Characteristic test data

Serial number of power transformer	BY04001

Requirement

Breakdown voltage shall not less than 40 kV.
Dielectric dissipation factor [90°C, 50Hz] shall not exceed 1.0%.

Procedure

Applied and adjusted power frequency voltage until breakdown voltage occured.

Test data

Breakdown voltage measurement for dielectric liquid							
Oil sample No.	Breakdown voltage [kV]						Average breakdown voltage [kV]
	1	2	3	4	5	6	
	65.4	63.9	64.2	62.1	66.1	63.2	64.2
Supplement information: N/A							

Dissipation factor measurement for dielectric liquid		
Test item	Measured value	Required value
Dielectric dissipation factor [90°C, 50Hz]	0.436%	1.0%
Supplement information: N/A		

Water content measurement for dielectric liquid		
Test item	Measured value	Required value
Water content [mg/L]	13.2	20
Supplement information: N/A		

Result

Breakdown voltage were not less than 40 kV.
Dielectric dissipation factor [90°C, 50Hz] shall not exceed 0.5%.
Water content in dielectric liquid did not exceed the 20 mg/L.

4.6 Salt spray tests

Standard and date

Standard	ISO 9227:2022
Test date	2025-06-05~2025-06-13
Test duration	196 h

Characteristic test data

Serial number of distribution transformer	BY04001

Coating characteristics and sample description

Coating	Epoxy primer powder with polyurethane topcoat powder

Operating conditions

Temperature	35℃ ± 2℃
Average collection rate for a horizontal collecting area of 80 cm^2	1.5 ml/h ± 0.5 ml/h
Sodium chloride concentration of the sprayed solution collected	50 g/L ± 5g/L
PH of the collected solution	6.5 to 7.2

Requirement

a. Place at least two clean and dry collection devices in the specimen area of the test chamber, one near the spray nozzle and the other away from it.

b. The collection devices shall consist of a collection funnel with a diameter of 100 mm ± 2 mm, corresponding to a collection area of 80 cm^2.

c. Each collection device shall collect an average volume of spray solution of 1.5 ml/h ± 0.5 ml/h over a minimum duration of 24 hours.

Test data

Salt spray tests			
Collection devices (ml)		Salt spray deposition rate (ml/h)	PH
I	33.5	1.50	7.1
II	33.5	1.50	

Result

No visible signs of corrosion, fractures, or defects.

Test photograph

5 Routine and special tests after short-circuit withstand test

5.1 Measurement of winding resistance

Standard and date

Standard	Subclause 11.2 of IEC 60076-1
Test date	2025-05-30

Environmental conditions

Ambient temperature	27.0 ℃
Ambient air pressure	101.3 kPa
Relative humidity	38%

Characteristic test data

Serial number of distribution transformer	BY04001
Applied current	5 Ad.c. for HV windings and 20 Ad.c. for LV windings

Requirement

For oil-immersed transformer:
Before conducting this test, the transformer shall not be excited for at least 3 h.
The average liquid temperature is taken as the mean of the top and bottom liquid temperatures.
The difference in temperature between the top and bottom liquid shall not exceed 5 K.

Procedure

The resistance of each winding was measured by means of the direct current measurement.
The average oil was taken as the mean of the top and bottom oil temperatures.
The following combinations were measured:
a. Between 1U-1V, 1V-1W and 1W-1U for all tapping positions.
b. Between 2U-2V, 2V-2W, 2W-2U.
c. Between 2U-2N.

Test data

Measurement of winding resistance						
Winding	Tap position	Measured value (R)			Resistance unbalance rate [%]	
		1U-1V	1V-1W	1W-1U	Calculated value	Required value
HV [Ω]	1	1.6553	1.6572	1.6601	0.29	--
	2	1.6121	1.6138	1.6171	0.31	--
	3	1.5684	1.5706	1.5734	0.32	--
	4	1.5241	1.5262	1.5292	0.33	--
	5	1.4812	1.4836	1.4864	0.35	--
LV [mΩ]	--	2U-2V	2V-2W	2W-2U	0.66	--
		0.5346	0.5311	0.5336		
		2U-2N			--	--
		0.2899				
Supplement information: Top/bottom oil temperature: 27.0/27.0 ℃ Formula: Resistance unbalance rate = $(R_{max}-R_{min})/R_{average}$						

Result

The test results are for information and calculation only.

Test photograph

5.2 Measurement of voltage ratio and check of phase displacement

Standard and date

Standard	Subclause 11.3 of IEC 60076-1
Test date	2025-05-30

Environmental conditions

Ambient temperature	27.0 ℃
Ambient air pressure	101.3 kPa
Relative humidity	38%

Characteristic test data

Serial number of distribution transformer	BY04001

Requirement

For principle tapping, the measured ratio shall not differ more than the following choice which is lower
a) ±0.5 % of the specified ratio
b) ±1/10 of the actual percentage impedance on the principal tapping
For other tappings, the measured ratio shall not differ more than 0.5% from the calculated ratio.
Connection symbol: Dyn5.

Procedure

The ratio was measured on each winding by means of ratio bridge.
The following combinations were measured:
Between 1U1V and 2U2V, 1V1W and 2V2W, 1W1U and 2W2U for all tapping positions.

The connection symbol was checked together with the determination of the voltage ratio. Balance of the bridge can be attained only if the voltages connected to the bridge from the primary and secondary side have the same phase and sense.

Test data

Measurement of voltage ratio and check of phase displacement										
HV side		LV side	Calculated Ratio	Measured ratio			Ratio deviation			Connection symbol
Tap position	Voltage [kV]	Voltage [kV]		1U1V/ 2U2V	1V1W/ 2V2W	1W1U/ 2W2U	1U1V/ 2U2V [%]	1V1W/ 2V2W [%]	1W1U/ 2W2U [%]	
1	23.1	0.42	55.000	55.012	55.012	55.013	0.02	0.02	0.02	Dyn5
2	22.55		53.690	53.699	53.699	53.701	0.02	0.02	0.02	
3	22		52.381	52.389	52.393	52.395	0.02	0.02	0.03	
4	21.45		51.071	51.078	51.081	51.082	0.01	0.02	0.02	
5	20.9		49.762	49.772	49.773	49.775	0.02	0.02	0.03	
Supplement information: Formula: Ratio deviation = (Measured ratio – Calculated ratio)/Calculated ratio										

Result

Passed, ratio deviation was not differ more than ±0.5% from the calculated ratio.
Vector group has been verified and determined Dyn5.

Test photograph

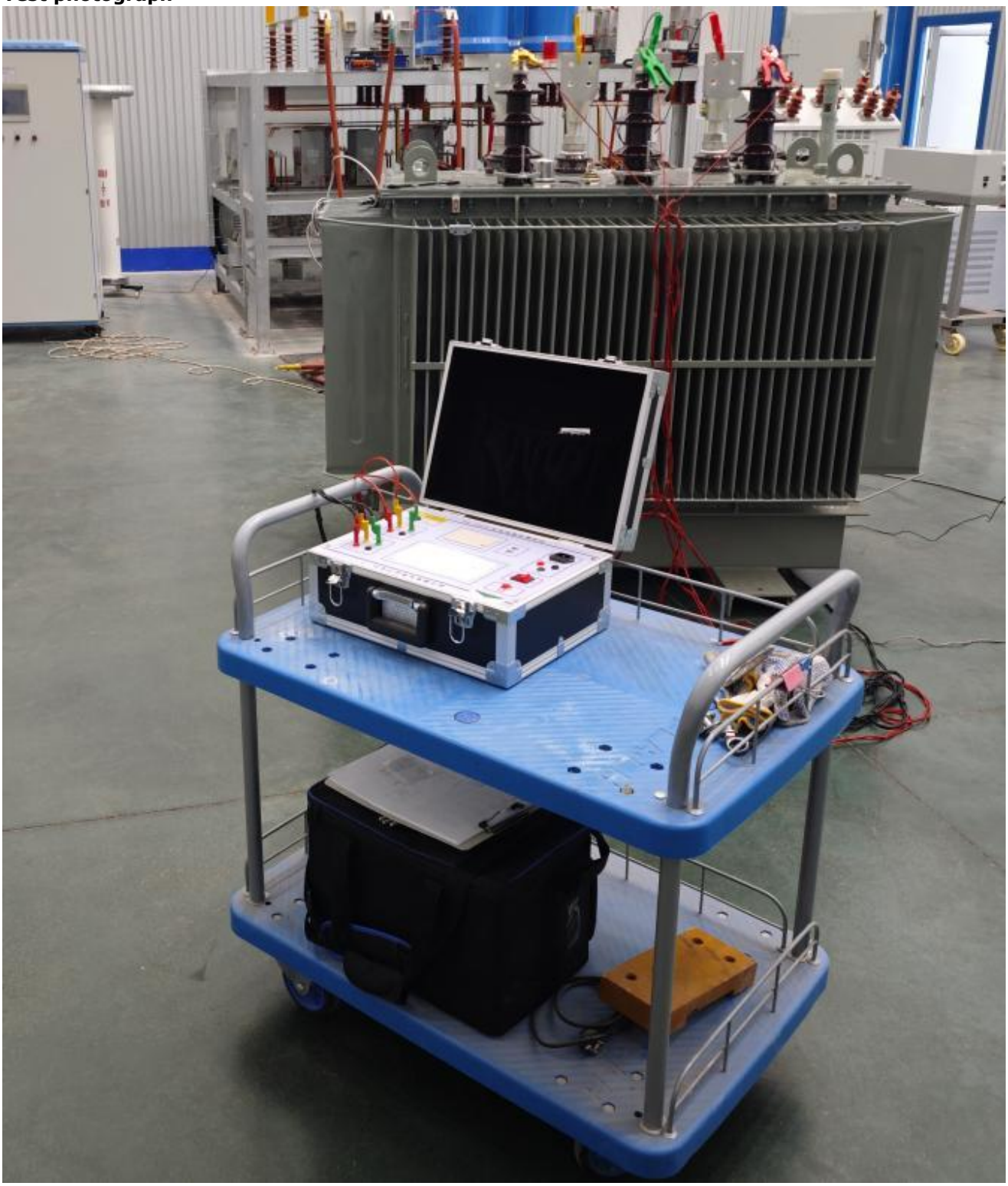

5.3 Measurement of short-circuit impedance and load loss

Standard and date

Standard	Subclause 11.4 of IEC 60076-1
Test date	2025-05-30

Environmental conditions

Ambient temperature	27.5 ℃
Ambient air pressure	101.5 kPa
Relative humidity	35%

Characteristic test data

Serial number of distribution transformer	BY04001
Material of windings	Copper

Requirement

Load loss in tap 3 HV-LV combination	≤12 kW
Impedance voltage of HV-LV combination in tap 3	6.0% (1±10%)

Short-circuit impedance and load loss test circuit

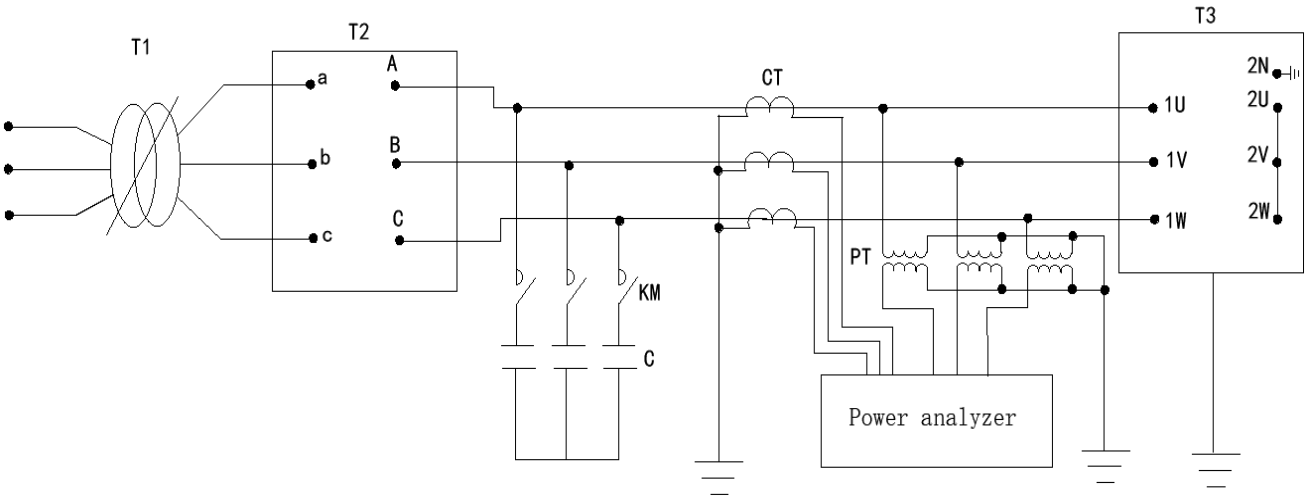

T1	Voltage regulator	T2	Setp-up transformer
T3	Transformer tested	CT	Current transformer
PT	Voltage transformer	KM	Vacuum contactor
C	Capacitor		
Short-circuit impedance and load loss test system			

Procedure

The short-circuit impedance and load losses for a pair of windings were measured with rated frequency with voltage applied to the terminals of one winding, while the other winding was shorted.
The average oil temperature was taken as the mean of the top and bottom oil temperatures.
The measurements were taken as follows:
The combination HV at tapping position 3 with LV terminals shorted and current based on rated power.
The measuring results were recalculated for 75 ℃ winding temperature.

Test data

Measurement of short-circuit impedance and load loss									
HV tapping position	1			3			5		
Rated voltage of HV side [kV]	23.1			22.0			20.9		
Rated voltage of LV side [kV]	0.42			0.42			0.42		
Rated current of HV side $I_{HVrated}$ [A]	39.98962903			41.98911049			44.19906367		
Rated current of LV side $I_{LVrated}$ [A]	2199.429597			2199.429597			2199.429597		
Resistance at Tm 27.0 ℃									
Measured value for HV winding [Ω]	1U1V	1V1W	1U1W	1U1V	1V1W	1U1W	1U1V	1V1W	1U1W
	1.6553	1.6572	1.6601	1.5684	1.5706	1.5734	1.4812	1.4836	1.4864
Average value for HV winding (Phase to phase) R_{HV} [Ω]	1.6575			1.5708			1.4837		
Measured value for LV winding [Ω]	2U-2V			2V-2W			2U-2W		
	0.0005346			0.0005311			0.0005336		
Average value for LV winding (Phase to phase) R_{LV} [Ω]	0.0005331								
Ohmic loss at rated power									
Calculated value at 27.5 ℃ P_{ct} [W]	7844.236802			8022.481138			8216.038611		
Correction value at 75 ℃ $P_{ohmic\ loss}$ [W]	9281.348888			9492.248675			9721.267059		
Calculated equation: a. $R_{\theta 1} = R_{TM}(235+\theta_1)/(235+Tm)$ b. $P_{ct} = \Sigma I^2 R_{\theta 1} = 1.5\times I_{HV}^2 R_{HV\theta 1}+1.5\times I_{LV}^2 R_{LV\theta 1}$ c. $K = (235+75)/(235+\theta_1)$ d. $P_{ohmic\ loss} = P_{ct}\times K$									
Load loss at rated power (Liquid average temperature θ_1: 27.5 ℃)									
Measured value at 27.5 ℃ P_{mt} [W]	3664.2			3769.4			4037.1		
Corrected measuring value (rated current) at 27.5 ℃ P_{cmt} [W]	9642.054969			9824.224219			9963.976148		
Additional loss at 27.5 ℃ P_{a2} [W]	1797.818167			1801.743081			1747.937537		
Correction additional loss at 75 ℃ $P_{additional\ loss}$ [W]	1522.346029			1525.669544			1480.108398		
Load loss at 75 ℃ $P_{load\ loss}$ [W]	10803.7			11017.9			11201.4		
Calculated equation: a. $P_{cmt} = P_{mt}\times(I_{HVrated}/I_{ac})^2$ b. $P_{a2} = P_{cmt} - P_{ct}$ c. $P_{additional\ loss} = P_{a2}\times(235+\theta_1)/(235+75)$ d. $P_{load\ loss} = P_{ohmic\ loss}+P_{additional\ loss}$									
Impedance voltage									
Applied current I_{ac} [A]	24.652			26.009			28.134		
Measured voltage [V]	901.40			850.40			810.35		
Short-circuit impedance [%]	6.3372			6.2481			6.0996		
Short-circuit impedance [Ω]	21.135			18.901			16.652		

Result

Passed, load loss in tap 3 HV-LV combination was less than the requirement of 12 kW. Impedance voltage of HV/LV combination in tap 3 met the requirement of 6.0% (1±10%).

Test photograph

5.4 Measurement of no-load loss and current

Standard and date

Standard	Subclause 11.5 of IEC 60076-1
Test date	2025-05-30

Environmental conditions

Ambient temperature	27.5 ℃
Ambient air pressure	101.5 kPa
Relative humidity	35%

Characteristic test data

Serial number of distribution transformer	BY04001
Material of windings	Copper
Applied rated voltage from LV windings	420V

Requirement

Maximum no-load loss at 100% voltage	≤1.08 kW
No-load current ratio	$0.40\%^{+30\%}$

No-load loss and current test circuit

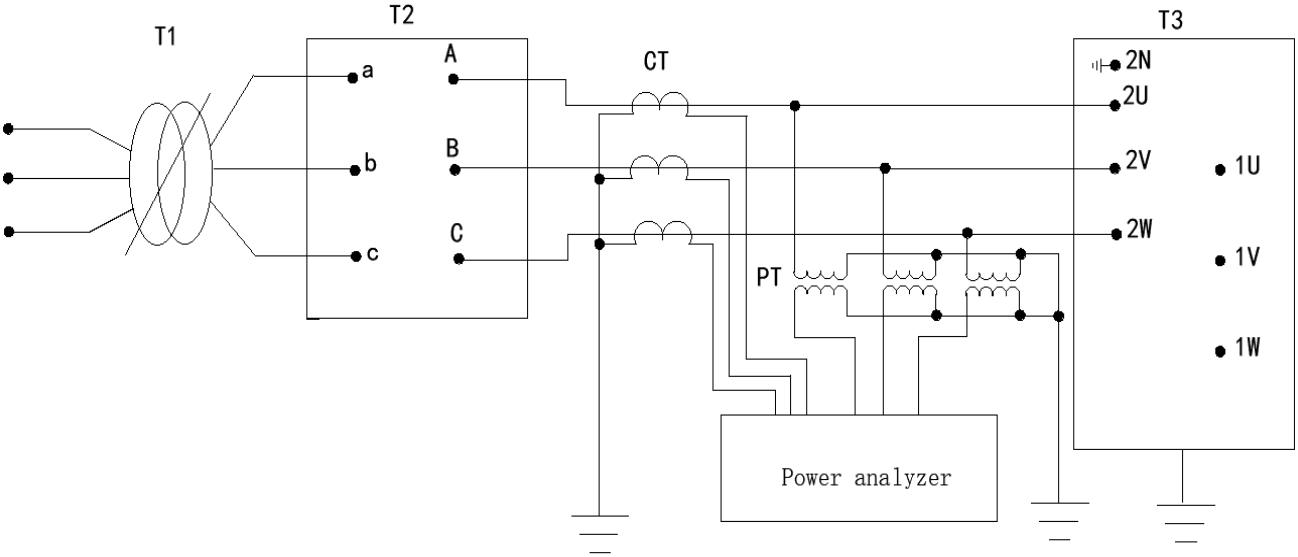

T1	Voltage regulator	T2	Setp-up transformer
T3	Transformer tested	CT	Current transformer
PT	Voltage transformer		
No load loss and current test system			

Procedure

The no-load loss and no-load current were measured at at 90%, 100% and 110% of the rated voltage at principal tapping (tap position 3) for HV winding, supplied to the low voltage terminals with 420V and rated frequency of 50 Hz.

Test data

Measurement of no-load loss and current								
Tap position	Test voltage		Ratio of applied voltage to rated voltage	No-load current		No-load loss		
	Mean value (U')	r.m.s. value (U)		Mean value		Mean value (Pm)	Corrected value (P0)	Required value
	[V]	[V]	[%]	[A]	[%]	[kW]	[kW]	[W]
3	420.39	420.87	100	2.6011	0.12	1030.7	1029.5	≤1080
Calculated equation: No-load current ratio = No-load current/Rated current of LV windings P0=Pm(1+d) d=(U'-U)/U'								

Result

Passed, the measured no-load loss and current at 100% of the rated voltage were within the specified tolerance.

Test photograph

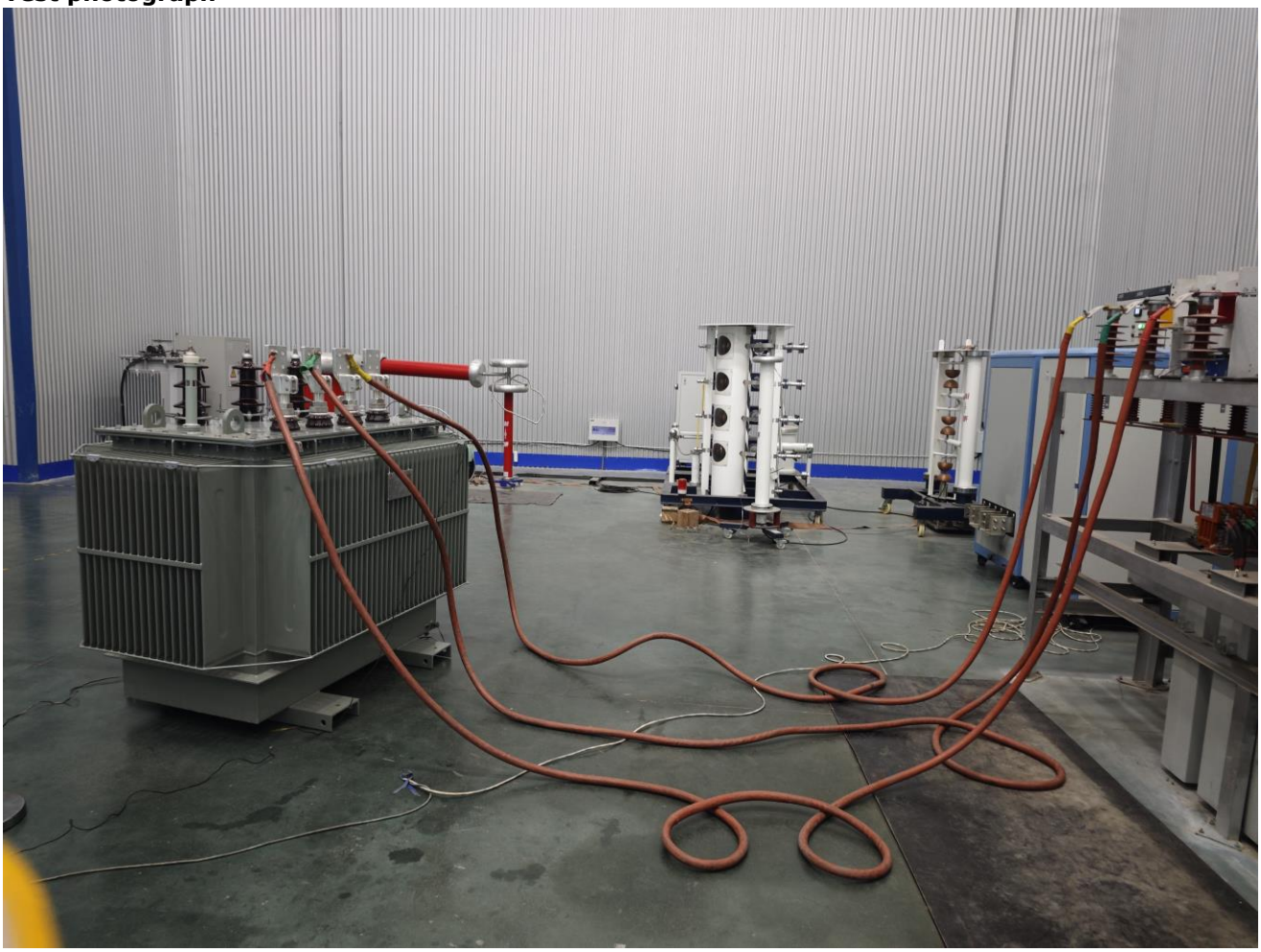

5.5 Leak testing with pressure for liquid immersed transformers (tightness test)

Standard and date

Standard	Subclause 11.8 of IEC 60076-1
Test date	2025-05-30

Environmental conditions

Ambient temperature	26.8~27.5 ℃
Ambient air pressure	101.2~101.5 kPa
Relative humidity	35%~37%

Characteristic test data

Serial number of distribution transformer	BY04001
Applied pressure	30 kPa
Pressure duration	8

Requirement

No leakage to the transformer tank.

Procedure

The following leak tests were carried out:

a. Transformer was complete as in service.

b. Applied pressure with 30 kPa in the transformer tank, and maintained for 8 h.

c. After testing, visual inspection should be done.

Test data

Leak testing with pressure for liquid immersed transformers (tightness test)			
Test method	Applied pressure [kPa]	Residual pressure [kPa]	Pressure duration [h]
Filling gas method	30.02	30.01	8
Supplement information:			

Result

Passed, no leakage to the transformer tank.

Test photograph

5.6 Applied voltage test

Standard and date

Standard	Subclause 10 of IEC 60076-3
Test date	2025-05-30

Environmental conditions

Ambient temperature	27.0 ℃
Ambient air pressure	101.3 kPa
Relative humidity	38%

Characteristic test data

Serial number of distribution transformer	BY04001
Specified test voltage	50 kV lasts 60 seconds for HV winding 10 kV lasts 60 seconds for LV winding and neutral point terminal
Test frequency	50 Hz

Requirement

No collapse of test voltage occurred during the test.

Applied voltage test circuit

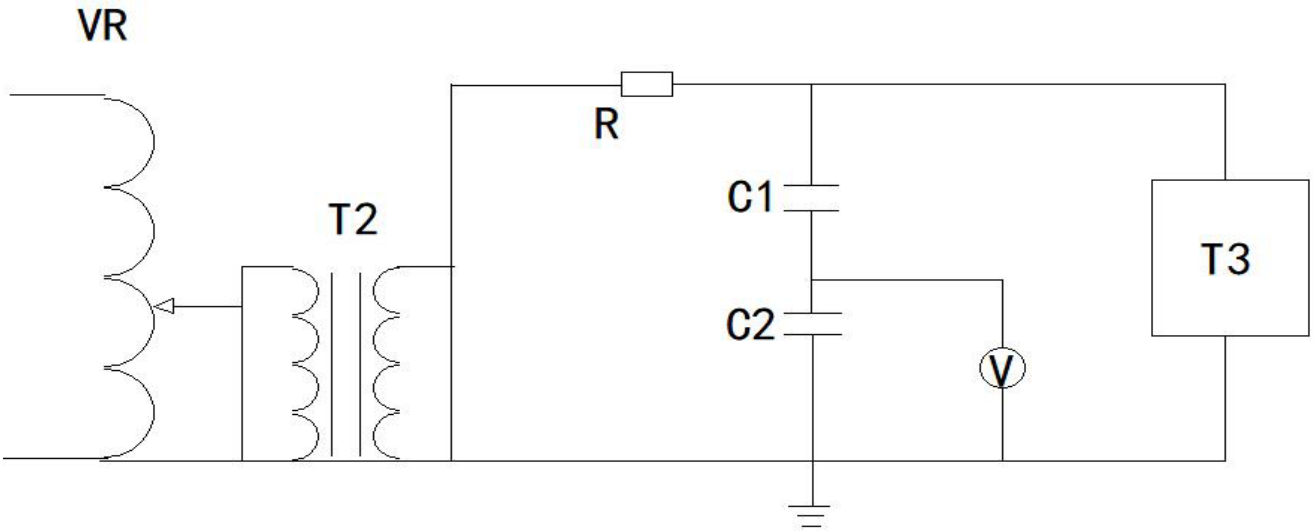

VR	Voltage regulator	T2	Experiment transformer
T3	Transformer tested	C1, C2	Voltage divider capacitor
V	Peak voltmeter	R	Protective resistance
Applied voltage (AV) test system			

Procedure

The test was carried out on each separate winding of the transformer in turn.

The full test voltage was applied for 60 s between all accessible terminals of the winding under test connected together and all accessible terminals of the remaining windings, core, frame and tank or casing of the transformer connected to earth.

Test data

Applied voltage test					
Tap position	Voltage applied to	Earth connected to	Test voltage	Duration	Frequency
			[kV]	[s]	[Hz]
Principal tap	HV winding	LV windings and frame	50.0	60	50.00
	LV winding & LVN	HV windings and frame	10.0	60	50.00
Supplement information: N/A					

Result

Passed, no collapse of test voltage occurred during the applied voltage test.

Test photograph

5.7 Induced voltage withstand test

Standard and date

Standard	Subclause 11.2 of IEC 60076-3
Test date	2025-05-30

Environmental conditions

Ambient temperature	27.5 ℃
Ambient air pressure	101.5 kPa
Relative humidity	35%

Characteristic test data

Serial number of distribution transformer	BY04001
Tap position	Principal tap
Applied voltage from LV terminal	2×Ur
Test frequency	200 Hz
Induced voltage	44 kV
Voltage duration	30 s

Requirement

No collapse of test voltage occurred during the test.

Induced voltage withstand test circuit

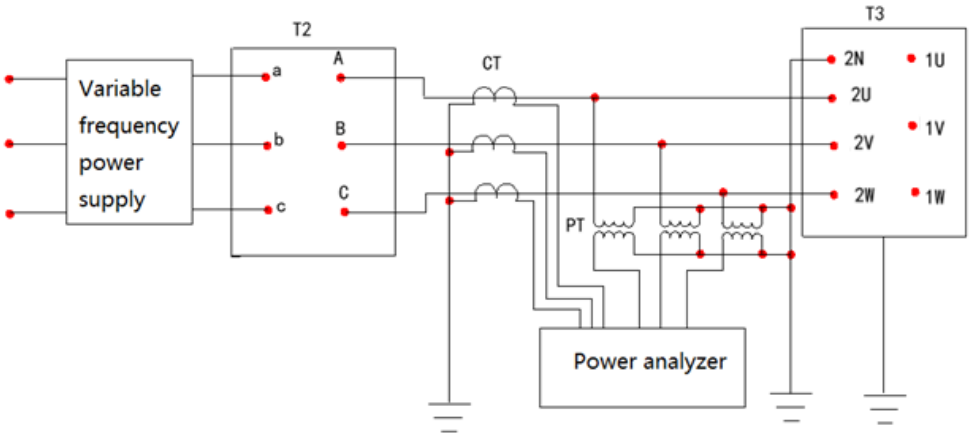

T2	Step-up transformer	T3	Transformer tested
PT	Voltage transformer	CT	Coupling capacitance
Induced voltage withstand test system			

Procedure

The induced voltage withstand test was carried out by applying a three-phase AC voltage of 200 Hz across three terminals of the low voltage windings. Therefore the voltage is induced on the HV terminals. The applied voltage shall be lasted for 30 s.

The tap position was on position 3 during the test.

The test shall commence at a voltage not greater than one-third of the specified test value, and the voltage shall be increased to the test value as rapidly as is consistent with measurement.

At the end of the test, the voltage shall be reduced rapidly to less than one-third of the test value before switching off.

Test data

Induced voltage withstand test					
Tapping position	Test voltage LV	Induced vlotage HV side	Induced ratio	Frequency	Duration
	[V]	[kV]	-	[Hz]	[s]
3	840.2	44.0	2	200.0	30
Supplement information:					

Result

Passed, no collapse of test voltage occurred during the induced voltage test.

Test photograph

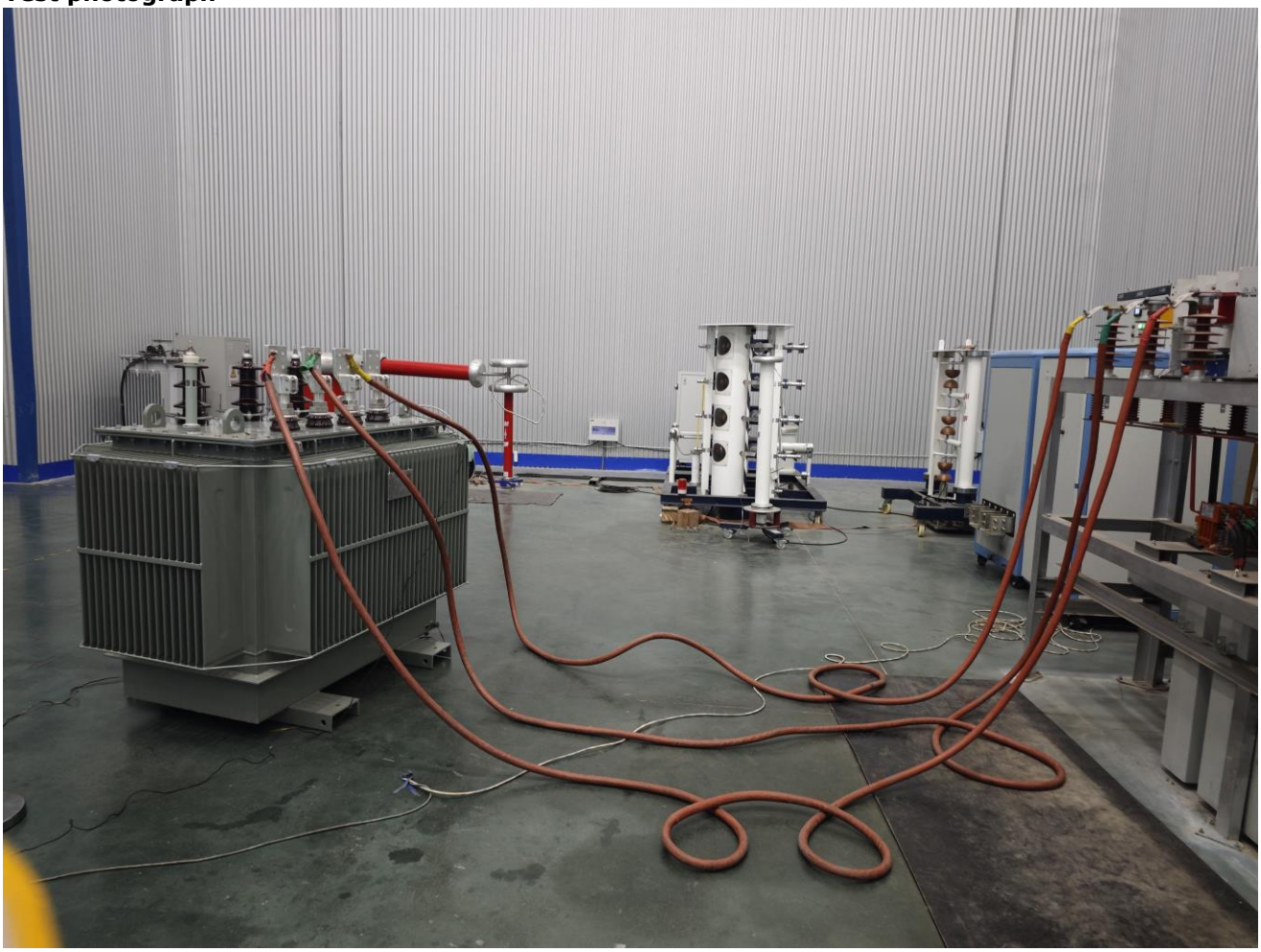

5.8 Measurement of d.c. insulation resistance each winding to earth and between windings

Standard and date

Standard	Subclause 11.1.4 h) of IEC 60076-1
Test date	2025-05-30

Environmental conditions

Ambient temperature	27.0 ℃
Ambient air pressure	101.3 kPa
Relative humidity	38%

Characteristic test data

Serial number of distribution transformer	BY04001
Applied voltage of insulation resistance meter	2.5 kV for HV winding 2.5 kV for LV winding

Requirement

On the request of manufacturer, the insulation resistance shall be measured at 15 s and 60 s.

Procedure

The average oil was taken as the mean of the top and bottom oil temperatures.
The following combinations were measured:
a. Between HV windings and LV windings, core, frame, oil tank, grounding.
b. Between LV windings and HV windings, core, frame, oil tank, grounding.
c. Between HV windings, LV windings and core, frame, oil tank, grounding.

Test data

Measurement of d.c. insulation resistance				
Combination of test	Applied voltage [kV]	R_{15} [GΩ]	R_{60} [GΩ]	Absorption ratio [R_{60}/R_{15}]
		Measured values		
HV — LV+E	2.5	38.5	62.6	1.63
LV — HV+E	2.5	24.7	41.0	1.66
HV+LV — E	2.5	20.6	33.3	1.62
Supplement information: Top/bottom oil temperature: 27.0/27.0 ℃				

Result

The test results are for information only.

Test photograph

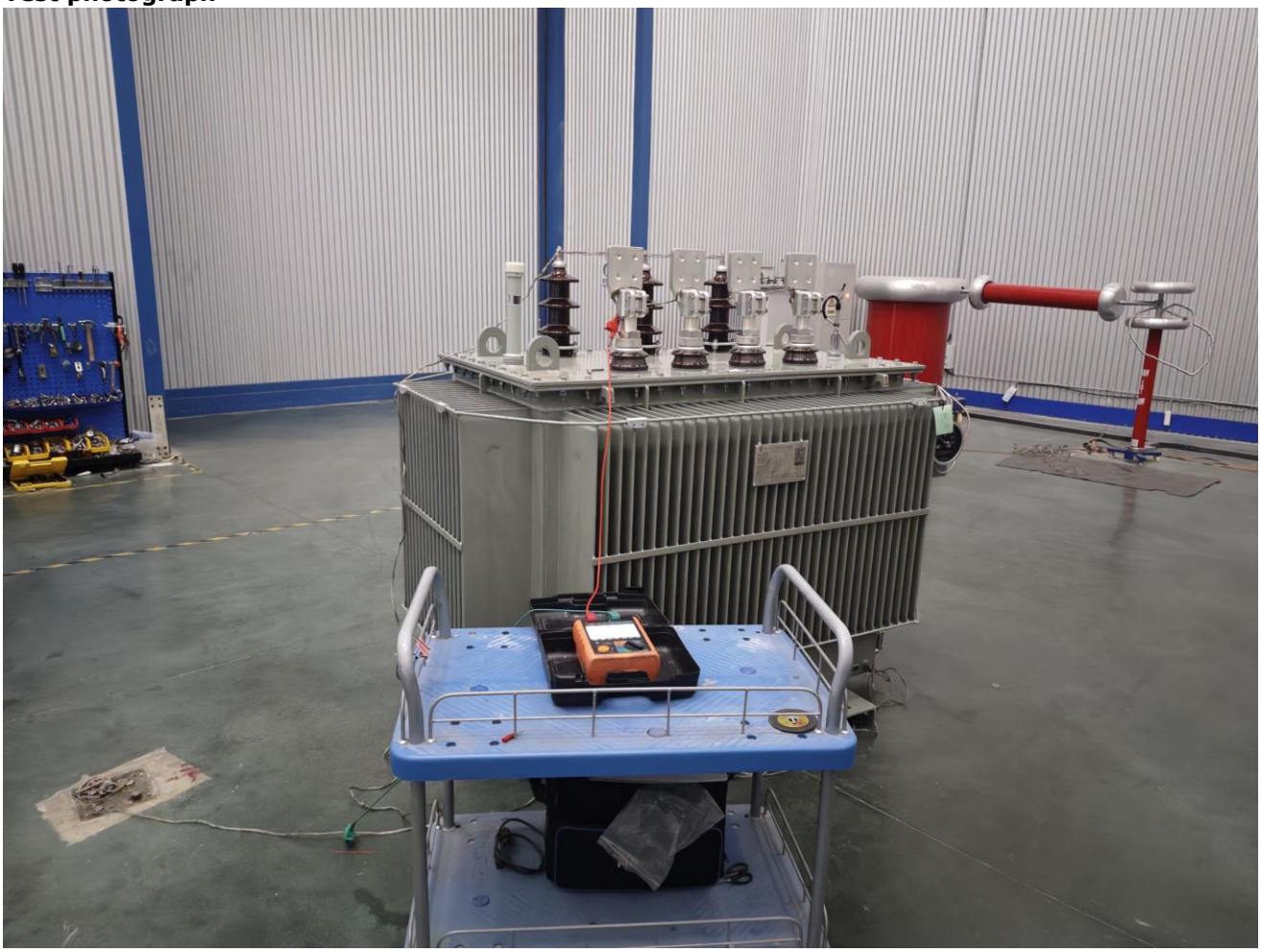

5.9 Lightning impulse voltage tests (Full wave and chopped wave)

Standard and date

Standard	Subclause 10 of IEC 60076-3
Test date	2025-05-30

Environmental conditions

Ambient temperature	26.8 ℃
Ambient air pressure	101.3 kPa
Relative humidity	37%

Characteristic test data

Serial number of distribution transformer	BY04001
Specified test voltage	125 kV LI wave for HV terminal 138 kV LIC wave for HV terminal 20 kV LI wave for LV terminal 22 kV LIC wave for LV terminal 20 kV LI wave for neutral terminal
T1	1.2 μs ± 30%
T2	50 μs ± 20%
TC	3~6 μs
Test tapping position	3
Rated power of transformer	1600 kVA

Requirement

No collapse of test voltage occurred during the test.

Lightning impulse withstand voltage test circuit

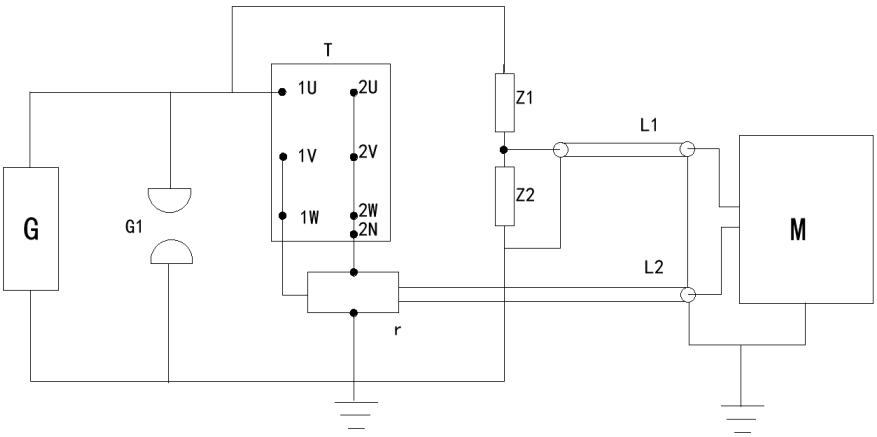

G	Impulse voltage generator	G1	Cut-off device
T	Transformer tested	r	Resistance
Z1, Z2	Resistance voltage divider	L1, L2	High frequency transmission cable
M	Digital phosphor oscilloscope		
Lightning impulse voltage test systems			

Procedure

The lightning impulse tests were carried out on all terminals. Every terminal was subjected to a chopped wave.

For the HV terminals, the tests were performed in tapping position 3.
The test sequence for HV and LV line terminals consisted of one reduced full wave, one full wave, two chopped waves and two full waves all with negative polarity.

Two test sequences for LV neutral terminal were applied. The 1st test sequence for LV neutral terminal consisted of one reduced full wave and three full waves all with negative polarity, the required waveshape was achieved.

Test data

Lightning impulse voltage test for HV terminals (Full wave and chopped wave)								
Tap position	Voltage applied to	Earth connected to	Percentage of impulse wave	Test voltage [kV]	T_1 [μs]	T_2 [μs]	T_C [μs]	Osc. No.
3	1U	LV windings, LVN and frame	50% (RW)	-67.6	1.47	48.07	--	1
			100% (FW)	-124.9	1.47	48.32	--	2
			50% (CFW)	-80.8	1.47	--	4.20	3
			100% (CFW)	-138.9	1.47	--	4.35	4
			100% (CFW)	-138.7	1.47	--	3.82	5
			100% (FW)	-126.2	1.48	48.37	--	6
			100% (FW)	-125.4	1.47	48.14	--	7
3	1V	LV windings, LVN and frame	50% (RW)	-69.0	1.47	48.07	--	8
			100% (FW)	-124.7	1.45	48.62	--	9
			50% (CFW)	-81.4	1.48	--	3.97	10
			100% (CFW)	-138.4	1.48	--	3.89	11
			100% (CFW)	-138.1	1.47	--	3.91	12
			100% (FW)	-125.3	1.47	48.12	--	13
			100% (FW)	-124.9	1.47	48.38	--	14
3	1W	LV windings, LVN and frame	50% (RW)	-69.2	1.45	48.09	--	15
			100% (FW)	-125.2	1.47	48.22	--	16
			50% (CFW)	-80.6	1.47	--	3.89	17
			100% (CFW)	-137.9	1.48	--	3.96	18
			100% (CFW)	-139.0	1.47	--	3.75	19
			100% (FW)	-124.6	1.48	48.60	--	20
			100% (FW)	-125.6	1.47	48.24	--	21
Supplement information: a. 1U, 1V, 1W means the HV terminal of transformer; b. RW: Reduced wave, FW: Full wave, CFW: Chopped full wave; c. This test was performed after short-circuit withstand tests.								

Lightning impulse voltage test for LV terminals (Full wave and chopped wave)								
Tap position	Voltage applied to	Earth connected to	Percentage of impulse wave	Test voltage [kV]	T_1 [μs]	T_2 [μs]	T_C [μs]	Osc. No.
--	2U	2V, 2W, HV windings and frame	50% (RW)	-11.6	1.23	49.02	--	22
			100% (FW)	-20.4	1.29	47.97	--	23
			50% (CFW)	-13.3	1.36	--	3.93	24
			100% (CFW)	-22.4	1.36	--	4.30	25
			100% (CFW)	-22.3	1.37	--	3.85	26
			100% (FW)	-20.3	1.27	47.76	--	27
			100% (FW)	-20.1	1.28	48.08	--	28
--	2V	2U, 2W, HV windings and frame	50% (RW)	-11.7	1.36	48.36	--	29
			100% (FW)	-20.3	1.34	47.99	--	30
			50% (CFW)	-13.0	1.38	--	4.01	31
			100% (CFW)	-22.4	1.35	--	4.60	32
			100% (CFW)	-22.2	1.38	--	3.77	33
			100% (FW)	-20.6	1.29	48.09	--	34
			100% (FW)	-20.2	1.28	47.89	--	35
--	2W	2U, 2V, HV windings and frame	50% (RW)	-11.5	1.27	48.59	--	36
			100% (FW)	-20.2	1.35	47.96	--	37
			50% (CFW)	-12.9	1.37	--	4.05	38
			100% (CFW)	21.9	1.36	--	3.72	39
			100% (CFW)	-22.3	1.35	--	4.56	40
			100% (FW)	-19.8	1.28	48.12	--	41
			100% (FW)	-20.3	1.28	48.23	--	42

Supplement information:
a. 2U, 2V, 2W means the LV terminal of transformer;
b. RW: Reduced wave, FW: Full wave, CFW: Chopped full wave.

Lightning impulse voltage test for LV neutral terminal (Full wave)								
Tap position	Voltage applied to	Earth connected to	Percentage of impulse wave	Test voltage [kV]	T_1 [μs]	T_2 [μs]	T_C [μs]	Osc. No.
--	LV neutral terminal	HV windings and frame	50% (RW)	-11.9	1.44	54.20	--	43
			100% (FW)	-20.4	1.08	54.41	--	44
			100% (FW)	-20.5	1.01	54.14	--	45
			100% (FW)	-20.6	1.04	54.61	--	46
Supplement information: a. RW: Reduced wave, FW: Full wave, CFW: Chopped full wave.								

Result

Passed, no collapse of test voltage occurred during the lightning impulse withstand voltage test.
Lightning impulse waves were attached below.

Osillogram

Terminal: 1U		
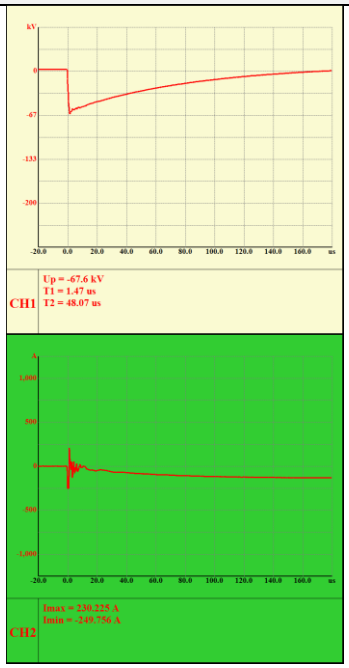	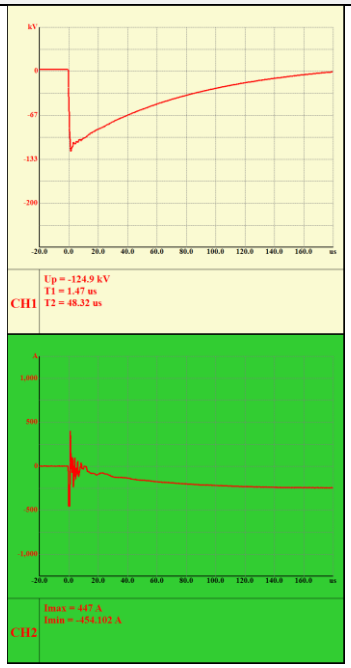	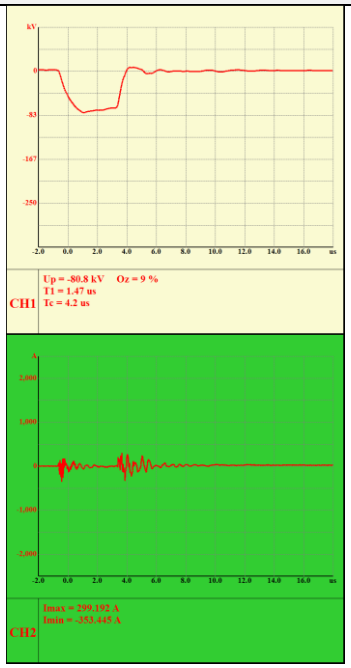
01	02	03

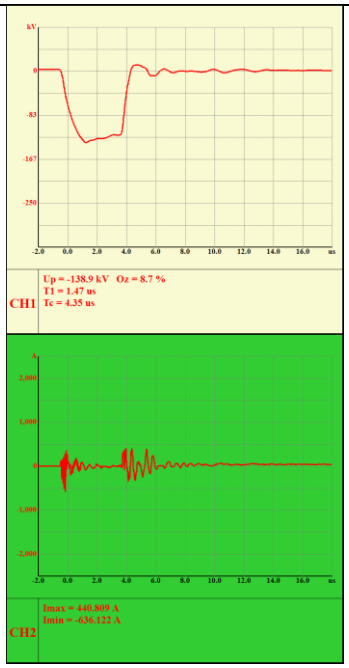 CH1 Up = -138.9 kV Oz = 8.7 % T1 = 1.47 us Tc = 4.35 us CH2 Imax = 440.809 A Imin = -636.122 A	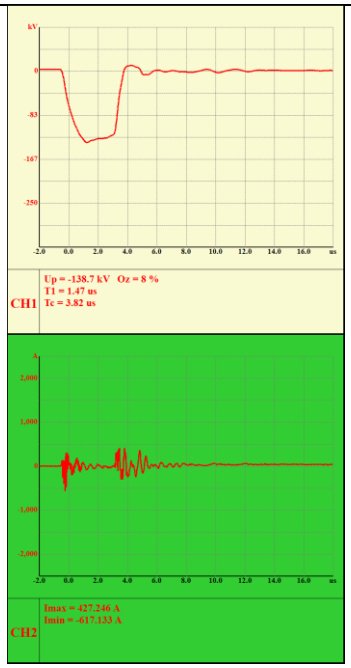 CH1 Up = -138.7 kV Oz = 8 % T1 = 1.47 us Tc = 3.82 us CH2 Imax = 427.246 A Imin = -617.133 A	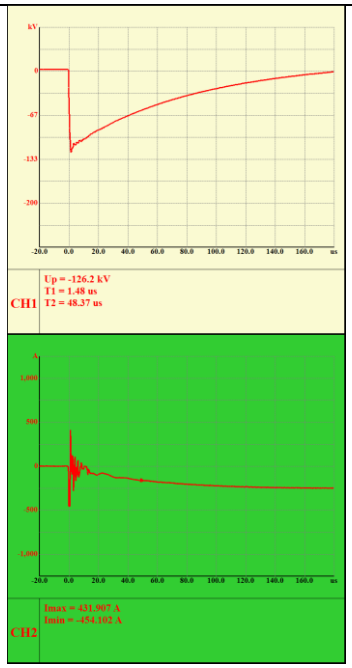 CH1 Up = -126.2 kV T1 = 1.48 us T2 = 48.37 us CH2 Imax = 421.987 A Imin = -454.102 A
04	05	06
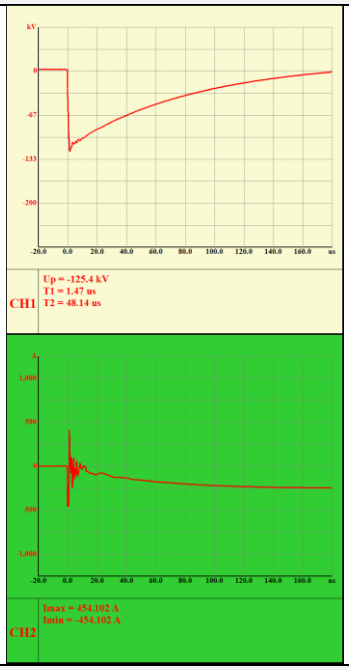 CH1 Up = -125.4 kV T1 = 1.47 us T2 = 48.14 us CH2 Imax = 454.102 A Imin = -454.102 A		
07		

Terminal: 1V		
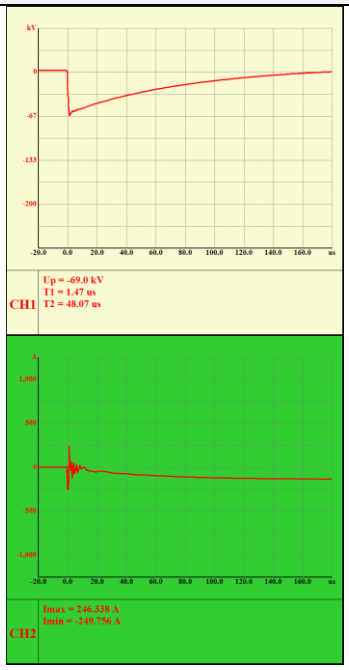	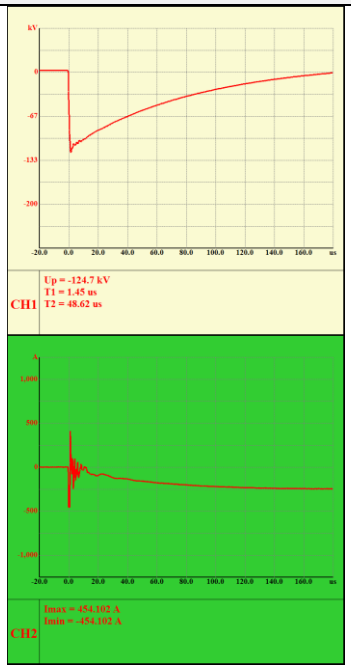	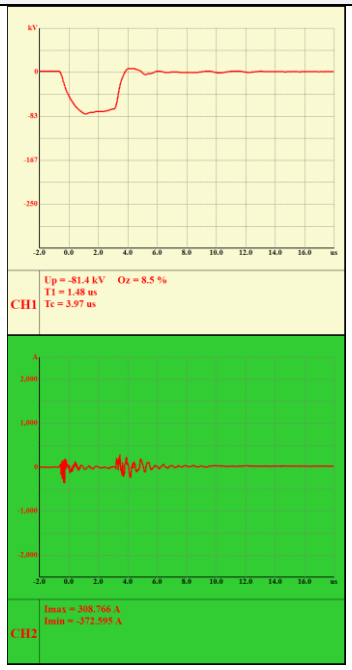
08	09	10
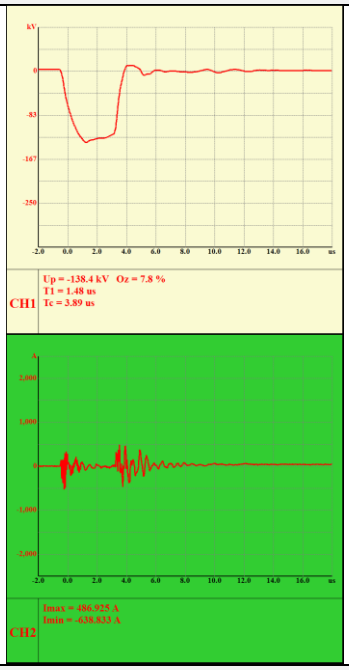	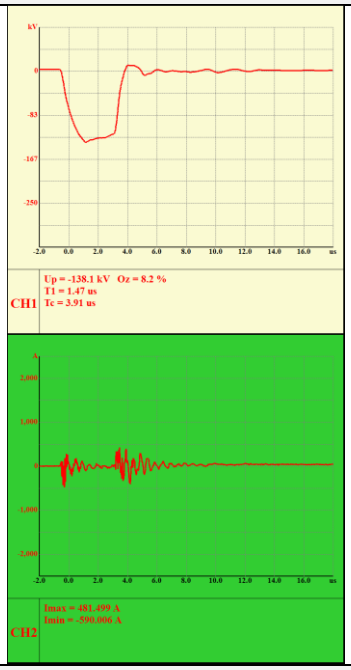	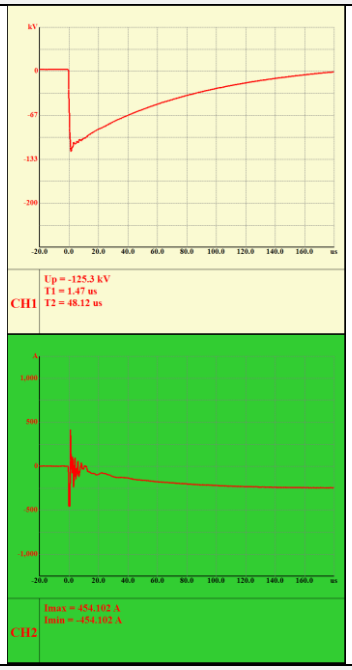
11	12	13

Terminal: 1V		
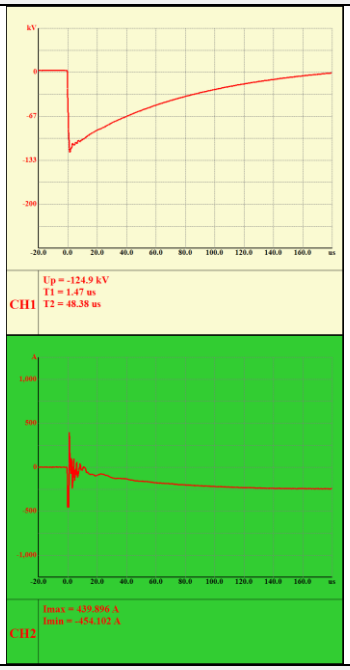		
14		

Terminal: 1W

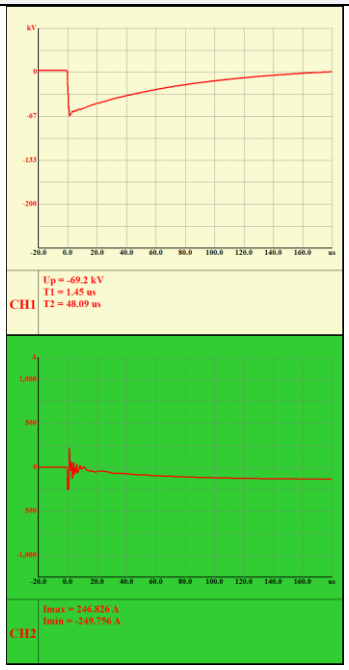

15

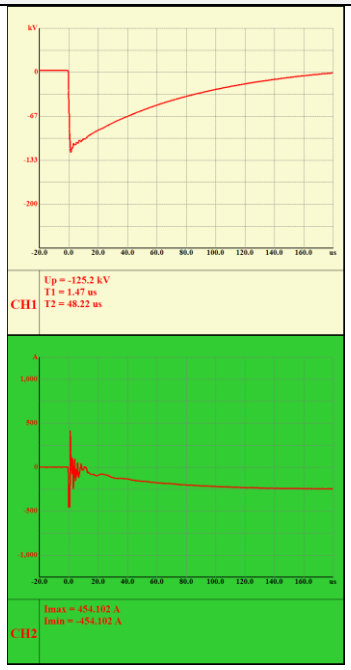

16

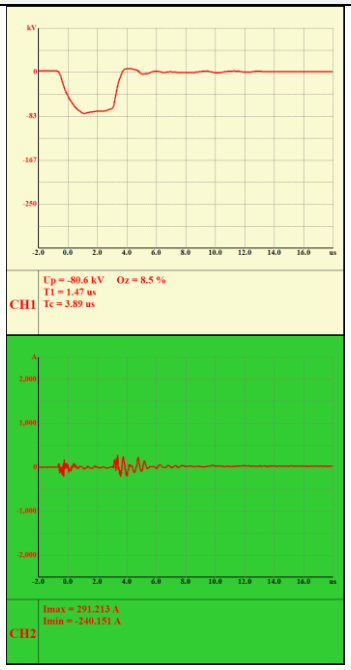

17

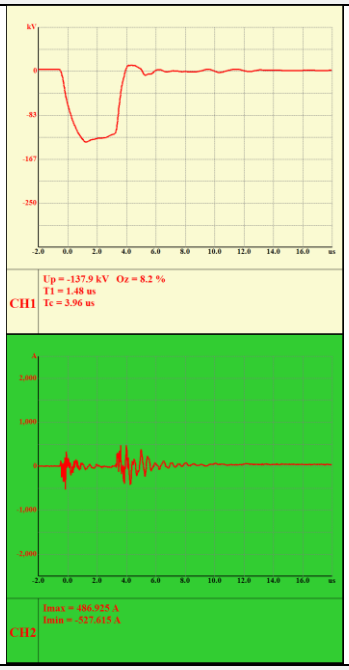

18

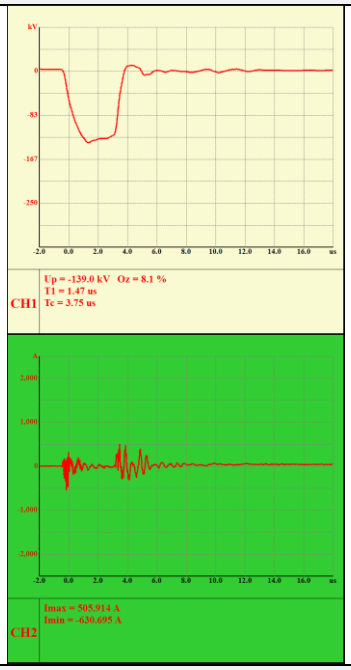

19

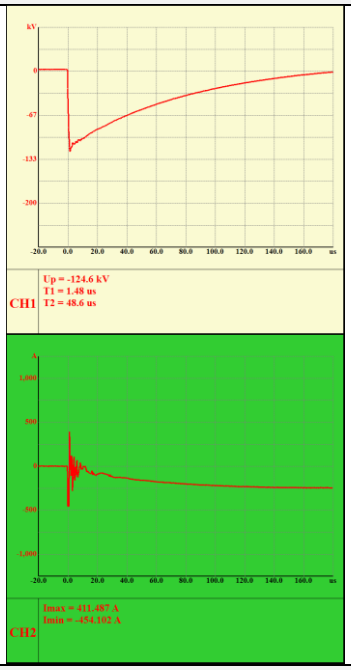

20

Terminal: 1W		
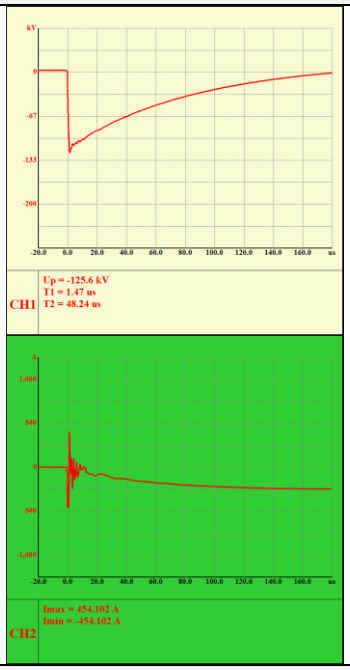		
21		

Terminal: 2U		
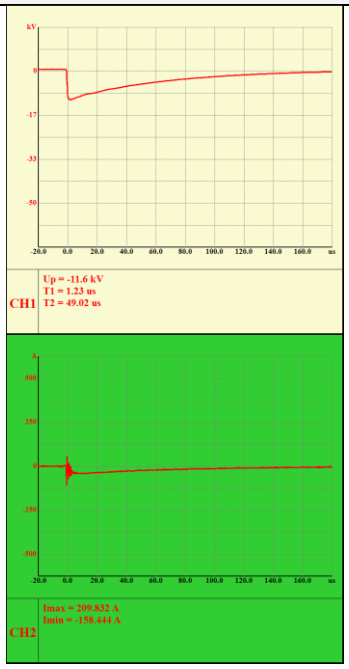	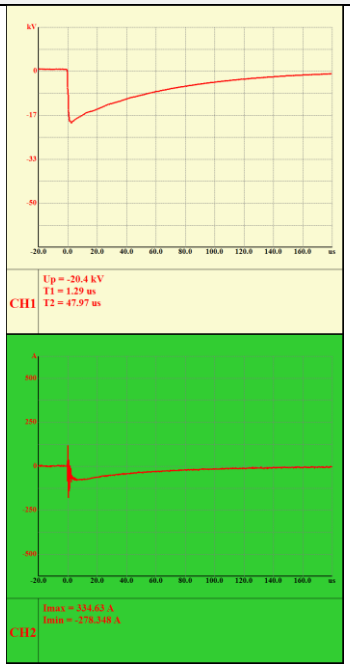	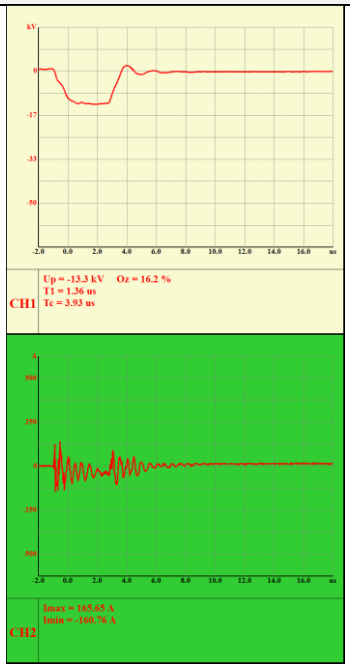
22	23	24

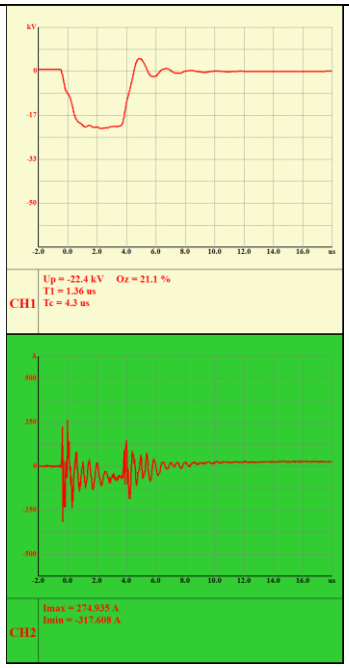
CH1
Up = -22.4 kV Oz = 21.1 %
T1 = 1.36 us
Tc = 4.3 us
CH2
Imax = 274.935 A
Imin = -317.608 A

25

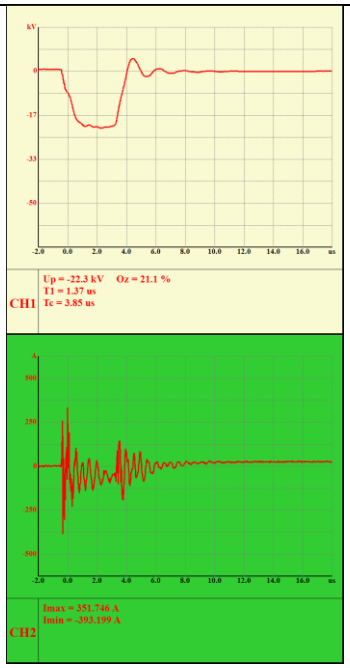
CH1
Up = -22.3 kV Oz = 21.1 %
T1 = 1.37 us
Tc = 3.85 us
CH2
Imax = 393.746 A
Imin = -393.199 A

26

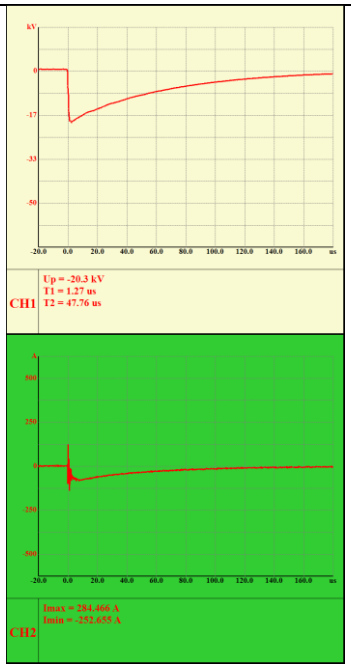
CH1
Up = -20.3 kV
T1 = 1.27 us
T2 = 47.76 us
CH2
Imax = 284.466 A
Imin = -252.655 A

27

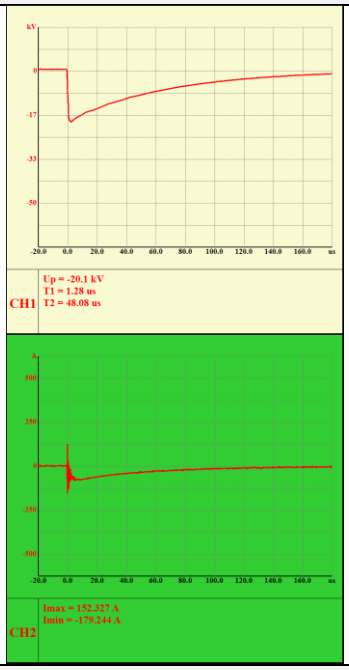
CH1
Up = -20.1 kV
T1 = 1.28 us
T2 = 48.08 us
CH2
Imax = 152.327 A
Imin = -179.244 A

28

Terminal: 2V		
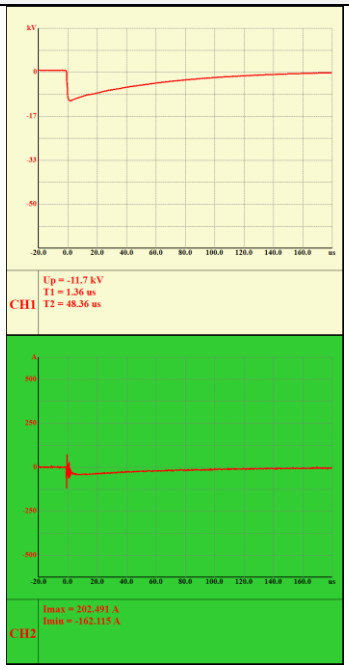	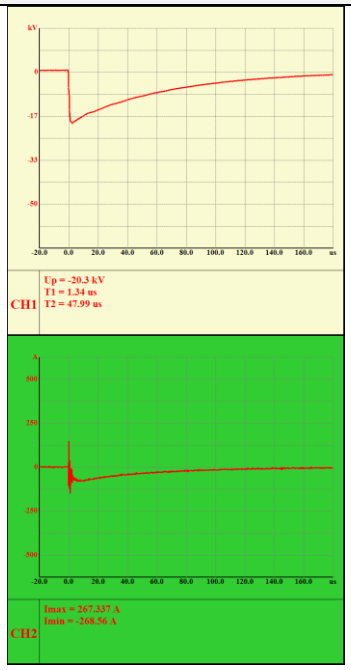	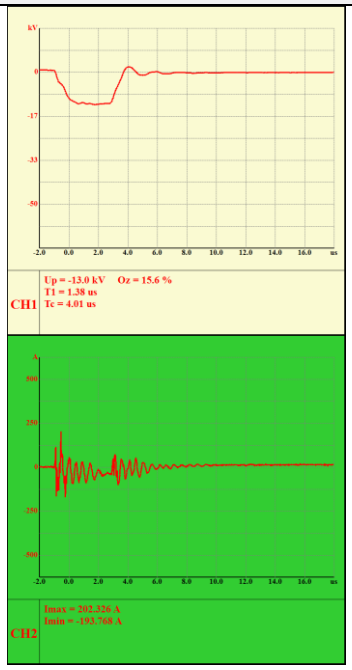
29	30	31
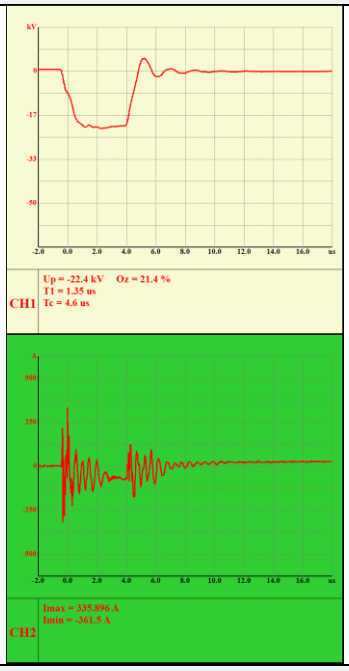	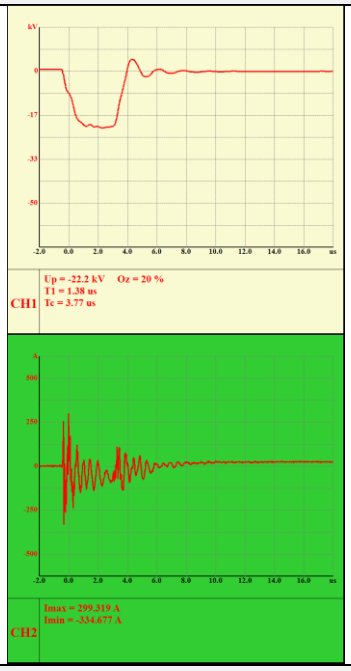	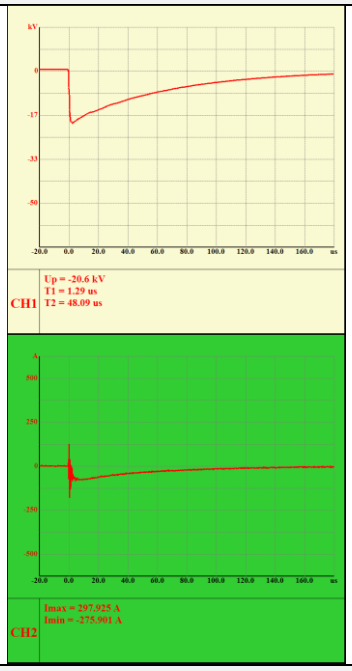
32	33	34

Terminal: 2V		
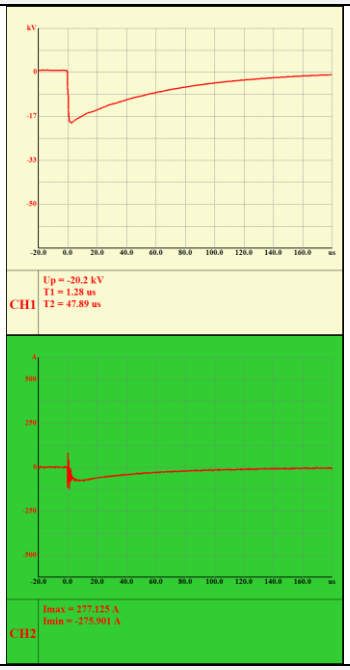		
35		

Terminal: 2W		
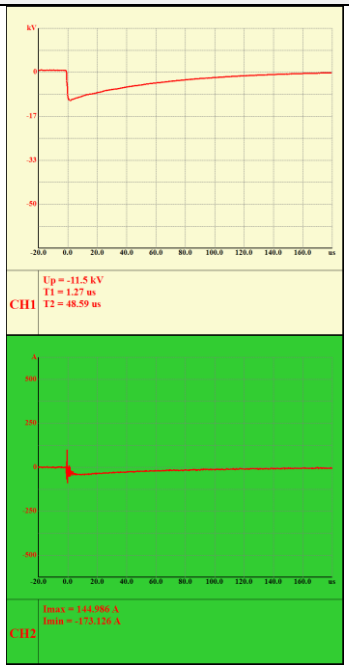	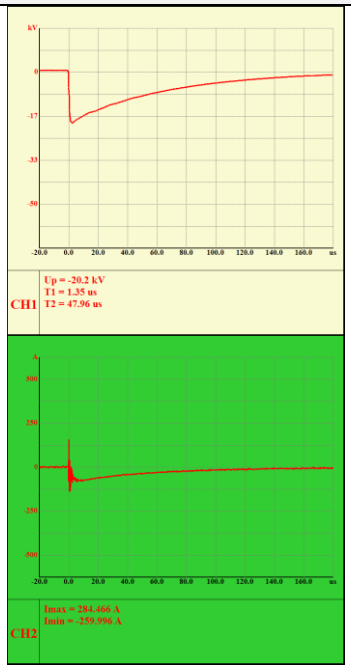	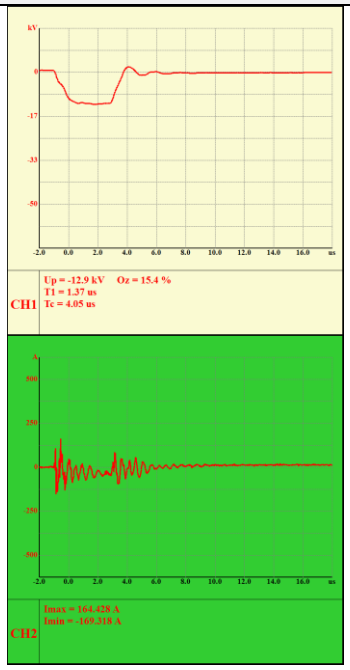
36	37	38
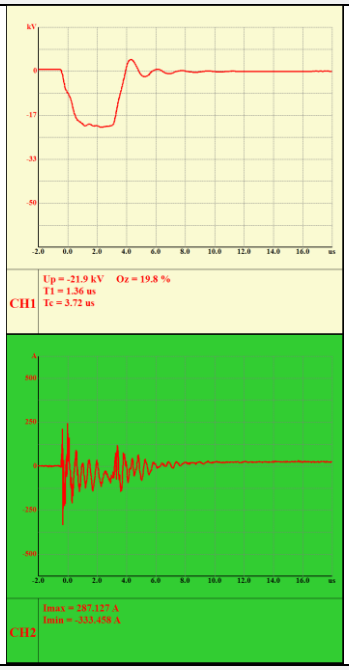	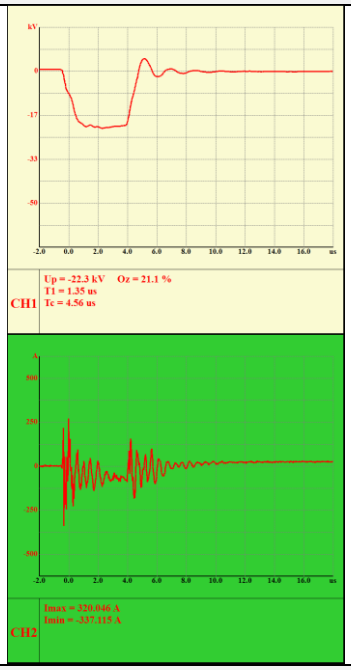	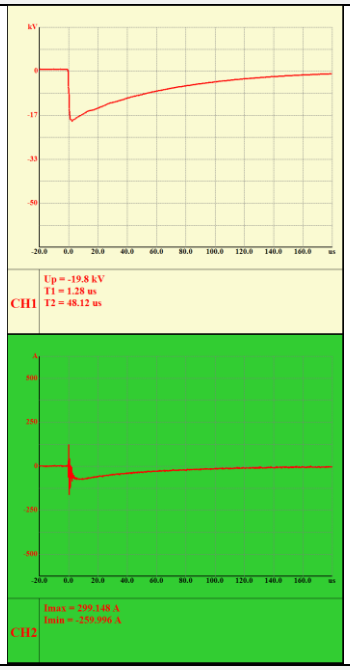
39	40	41

Terminal: 2W		
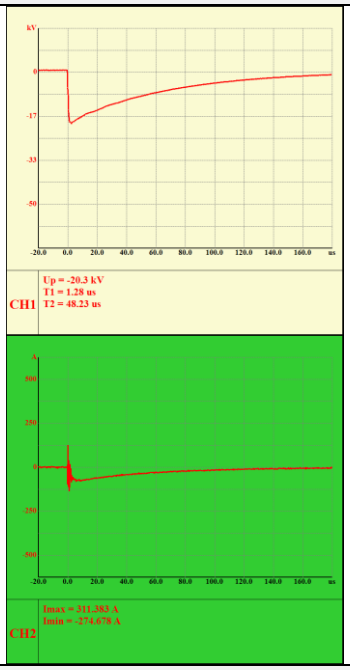		
42		

Terminal: 2N		
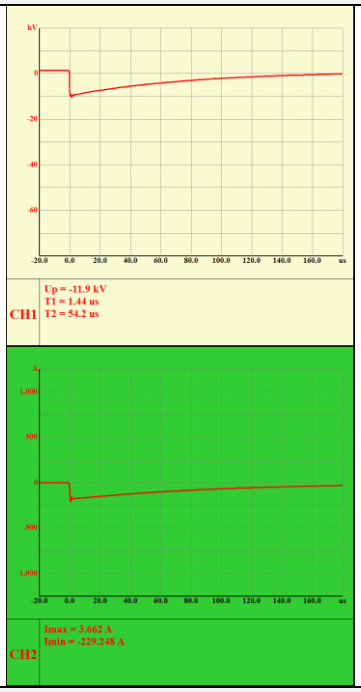	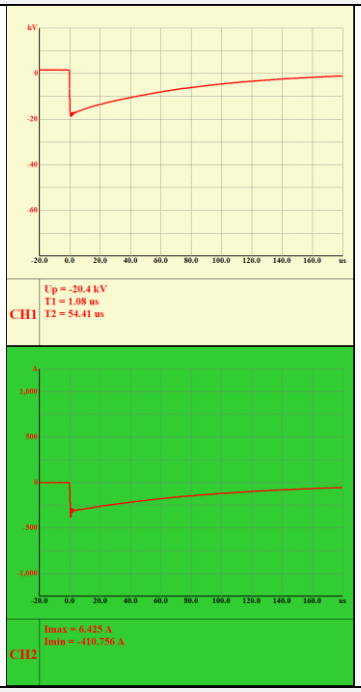	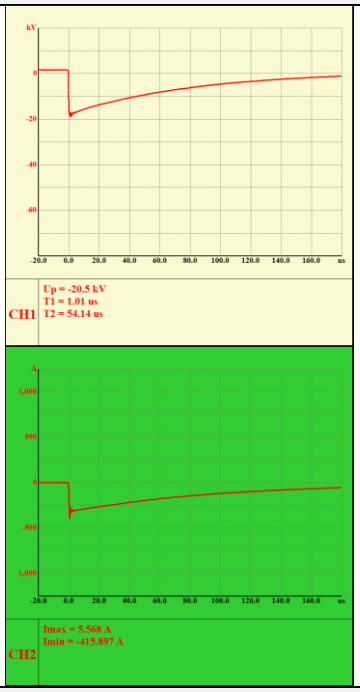
43	44	45

Terminal: 2N		
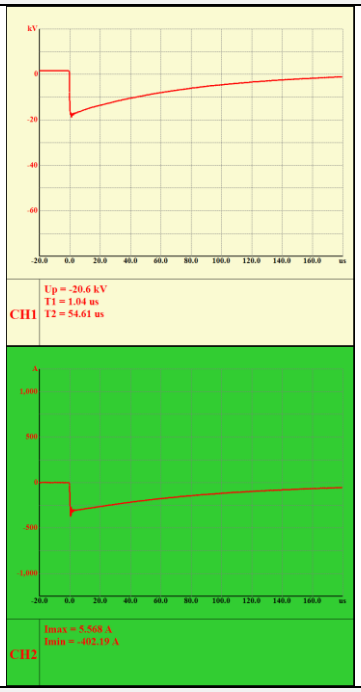		
46		

Test photograph

6 Type tests

6.1 Temperature-rise test for liquid-immersed transformers

Standard and date

Standard	IEC 60076-2
Test date	2025-05-27~2025-05-28

Environmental conditions

Ambient temperature	25.3~25.8 ℃
Ambient air pressure	N/A kPa
Relative humidity	N/A

Characteristic test data

Serial number of distribution transformer	BY04001
Cooling method	ONAN
Rated power	1600 kVA
Test tapping position	3
Total loss supplied at 50 Hz	12006.6 W
No-load losses	1017.6 W
Load losses at reference temperature (75 ℃)	10989 W
Rated current	42.00 A

Requirement

Top oil temperature rise	≤ 60 K
Winding temperature rise	≤ 65 K

Temperature-rise test circuit

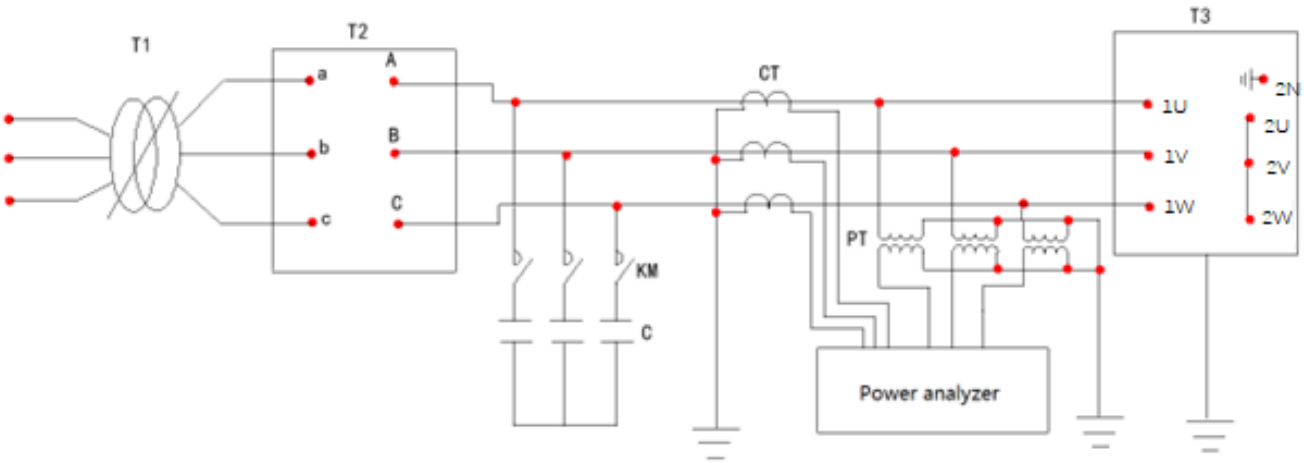

T1	Voltage regulator	T2	Step-up transformer
T3	Transformer tested	CT	Current transformer
PT	Voltage transformer	KM	Vacuum contactor
C	Capacitor		
Temperature-rise test system			

Procedure

Four temperature sensors were placed around the ONAN transformer with a level about halfway up the cooling surfaces.
The sensors shall be distributed around the tank, about 2 m away from the perimeter of tank and cooling surfaces, and protected from direct heat radiation.

Since the rated power of transofrmer is less than 20 MVA, one sensor was immersed in the insulating liquid at the top of the tank. And the tapping changer was set to tapping 3.

The transformer was energized from the HV terminals, the LV terminals were shorted by cooper bar. Before injected the power, measured the colding resistance of HV and LV windings and recorded the liquid temperature simultaneously.

Total losses Injection period: Injected total losses on the transformer, the first part of test may be terminated when the rate of change of top-liquid temperature rise has fallen below 1 K/h and has remained there for a period of 3 h.

Rated current injection period: After total losses injection, applied the rated current on the transformer, this condition is maintained for 1 h, during which time continuous temperature records of top-liquid, external cooling medium should be taken at least every 5 min.

After rated current injection, the resistances of the windings are meaured, either after a rapid disconnection of the supply and short circuits. And recored resistances of the ten minutes with 1 minute interval.

Test data

Temperature-rise test					
Measurement of colding winding resistance					
HV tap position	Measured value (R) [mΩ]				Liquid temperature [℃]
	1V-1W		2V-2W		
3	1563.4		0.5287		25.8
Total loss stage: Calculation total loss value: 12006.6 W, test total loss at the ending: 12009 W, average ambient temperature: 25.7 ℃					
Measuring position	Measured top oil temperature [℃]	Temperature-rise of top oil [K]	Corrected temperature-rise of top oil ($\Delta\theta_o$) [K]	Average liquid temperature-rise (80% corrected top oil temperature-rise) [K]	Average liquid temperature (θ_a) [℃]
	72.2	46.5	--	37.2	62.9
Formula: Temperature-rise corrected factor of total loss = (Total loss/test loss)$^{0.8}$					
Rated current stage: Calculation rated current: 42.00 A, test current at the ending: 42.01 A, average ambient temperature: 25.9 ℃					
Measuring position	Measured top oil temperature [℃]	Temperature-rise of top oil [K]	Corrected temperature-rise of top oil ($\Delta\theta_o$) [K]	Average liquid temperature-rise (80% corrected top oil temperature-rise) [K]	Average liquid temperature [℃]
	71.7	45.8	--	36.6	62.5
Formula: Corrected top oil temperature-rise = (Rated current/test current)$^{1.6}$					

Measurement of hot winding resistance (After power switching off)

Winding	Tap position	Measured value (R)									
		1V-1W/2V-2W									
		1	2	3	4	5	6	7	8	9	10
HV [Ω]	3	1.8643	1.8533	1.8431	1.8337	1.8252	1.8175	1.8106	1.8045	1.7792	1.7946
LV [mΩ]	-	0.6383	0.6345	0.6310	0.6278	0.6249	0.6222	0.6198	0.6177	0.6159	0.6143

Temperature-rise results

Windings	Average winding temperature θ_2 [℃]	Average winding temperature-rise value $\Delta\theta_w$ [K]	Oscillogram
HV	78.07	52.77	F1
LV	81.97	56.67	F2

Winding cooling down curve

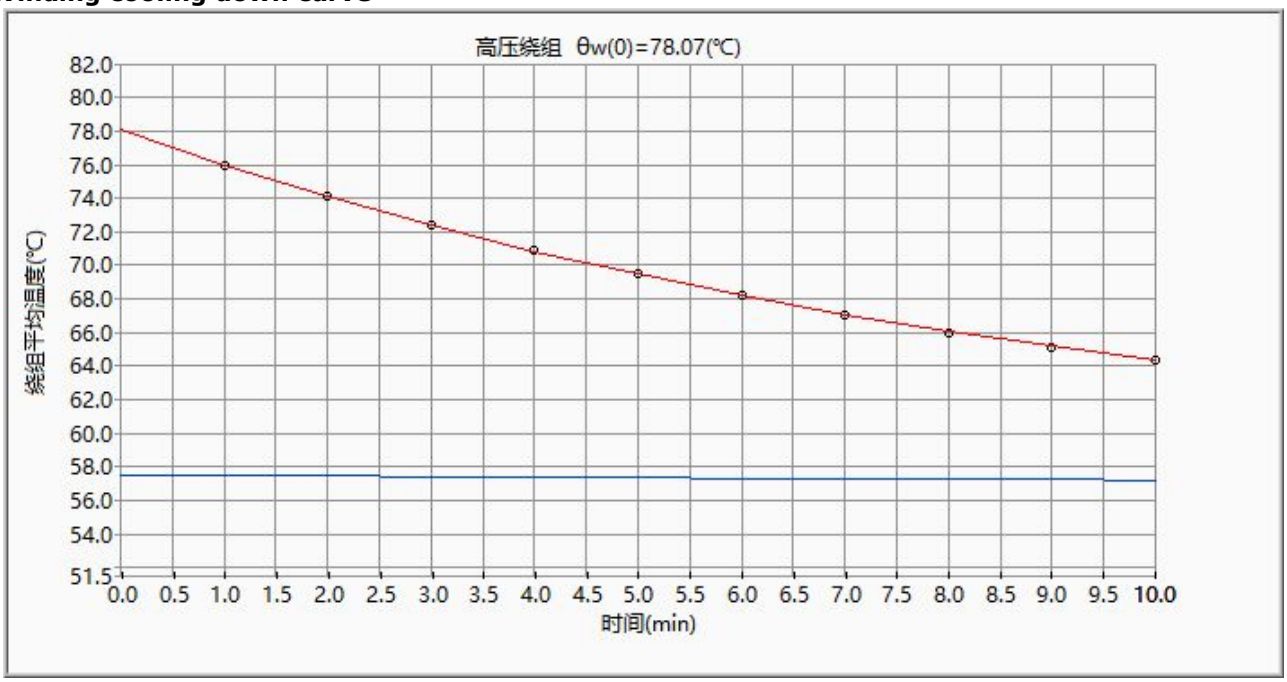

F1 HV winding temperature curve

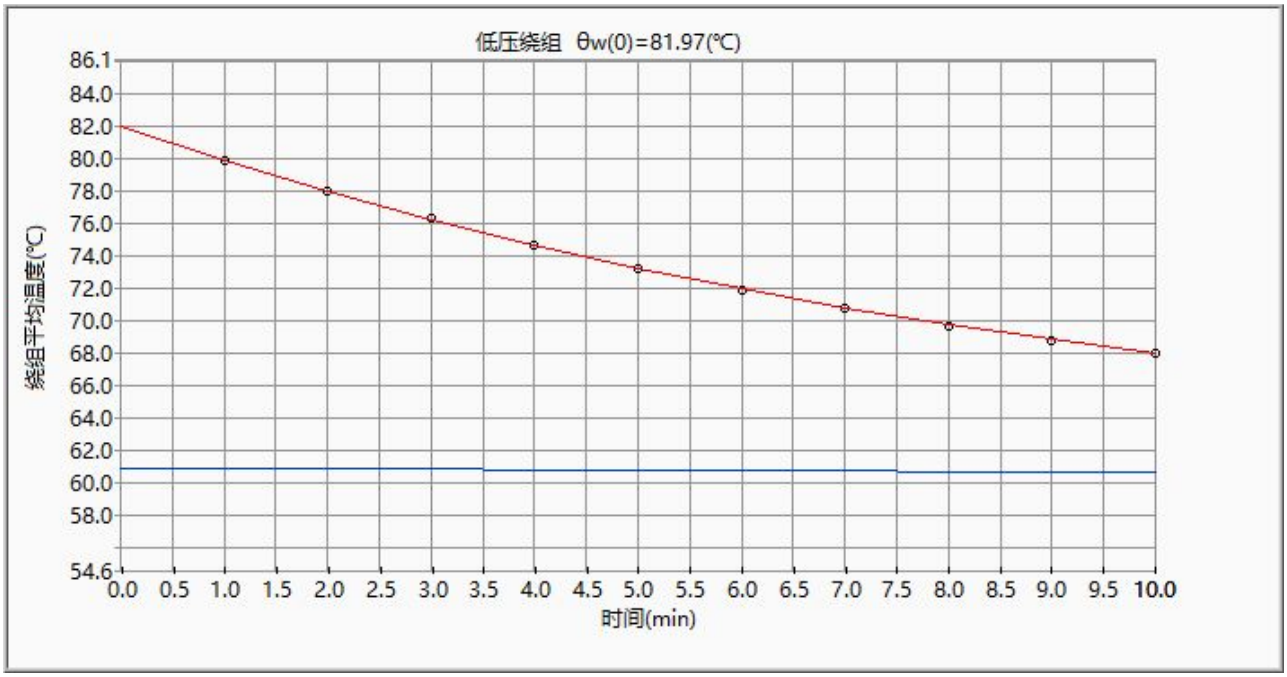

F2 LV winding temperature curve

Result

Passed,

Top oil temperature rise	≤ 60 K
Winding temperature rise	≤ 65 K

Test photograph

6.2 Determination of sound levels

Standard and date

Standard	IEC 60076-10
Test date	2025-05-27

Environmental conditions

Ambient temperature	26.1 ℃
Ambient air pressure	101.2 kPa
Relative humidity	27%

Characteristic test data

Serial number of distribution transformer	BY04001
Cooling method	ONAN
Rated power	1600 kVA
Height of transformer oil tank	1.280 m

Requirement

Sound power level shall not exceed 57 dB(A) at ONAN condition.

Sound power calculation due to load current

In order to judge whether it is necessary to measure the ground sound level under load current, it can be roughly estimated by following equation:

$$L_{WA,\,Ir} \approx 39 + 18 \times \lg \frac{S_r}{S_p} \text{ for 50 Hz power frequency}$$

$$L_{WA,\,Ir} \approx 44 + 18 \times \lg \frac{S_r}{S_p} \text{ for 60 Hz power frequency}$$

Where,

$L_{WA,\,Ir}$ is the estimated A-weighted sound power level of the transformer at rated current and rated frequency at short-circuit condition.

Sr is the rated power in MVA.

Sp is the reference power (1 MVA).

Estimated sound level of this transformer (1600 kVA): LWA = 39+18×lg (1.6/1)= 42.7 dB (A)

The calculated values are more than 10 dB below the sound power level estimated at no-load excitation, therefore no need to test on load current.

Procedure

The acoustic sound level was measured at the selected locations, around the transformer, at half height at no-load condition.

The test was performed in the ONAN situation with rated voltage and the tap changer in position 3 and energized from the low voltage windings. The measuring points were measured at 0.3 meter from the principal radiating surface.

Test data

Determination of sound levels
Height of transformer (h): 1280 mm Perimeter of the outline (lm): 8.200 m Measuring area proportion: S = (h+0.3)×lm = 12.956 m^2 Environmental correction: $K = 10 \times \lg \left(1 + \frac{4}{A/S}\right)$ =0.51 dB Average acoustic absorption coefficient: Hard floor: α = 0.1; Wall and ceiling: α = 0.3 Area of the partial surface of the test room: Hard floor: Svi = 285 m^2; Wall and ceiling: Svi = 1277.8 m^2 Absorption Amount: A = α x Svi = 411.84 m^2 Height of measuring point: 0.640 m Average measuring point interval distance: 0.820 m Test method: Sound pressure method
☒ Sound power level L_{WA} (derived from sound pressure) ☐ Sound pressure level L_{PA} at measuring distance ☐ Sound pressure level L_{PA} at a specified distance

Applied voltage [V]	Rated frequency [Hz]	Tap position	Distance [m]	In operation	
				No. Of fans	No. Of pumps
420.05	50.0	3	0.3	N/A	N/A

Sound pressure level measurement

Measuring position	1	2	3	4	5	6	7	8	9	10
Before test of background noise	27.7	27.9	27.5	28.0	27.4	27.7	27.3	28.1	27.7	27.8
Sound pressure of object	42.5	42.9	42.0	42.6	42.7	42.2	42.5	42.7	42.4	42.6
After test of background noise	27.7	28.0	27.3	27.7	27.9	27.5	28.1	27.3	27.6	27.8

Average measured sound pressure level L_{PA0}	42.5 dB(A)
Background sound pressure (before/after) L_{bgA}	27.7/27.7 dB(A)
Environmental correction K	0.51 dB
Corrected average sound pressure level L_{PA}	41.8 dB(A)
Calculated sound power level L_{WA}	52.9 dB(A)
Guaranteed sound power level L_{WA}	57 dB(A)

Formula:

$LPA = 10\log(10^{0.1LPA0} - 10^{0.1LbgA}) - K$

$LWA = LPA + 10\log(S/S0)$

S0 is equal to the reference area (1 m^2)

Result

Sound power level was not exceed 57 dB(A) at ONAN condition.

Sound level measuring position diagram

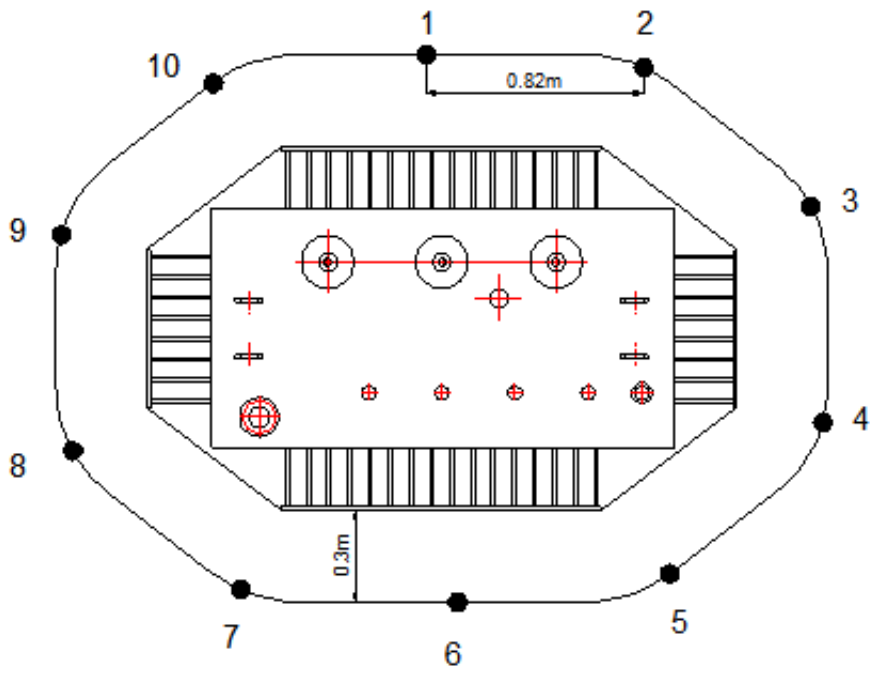

Test photograph

7 Drawings

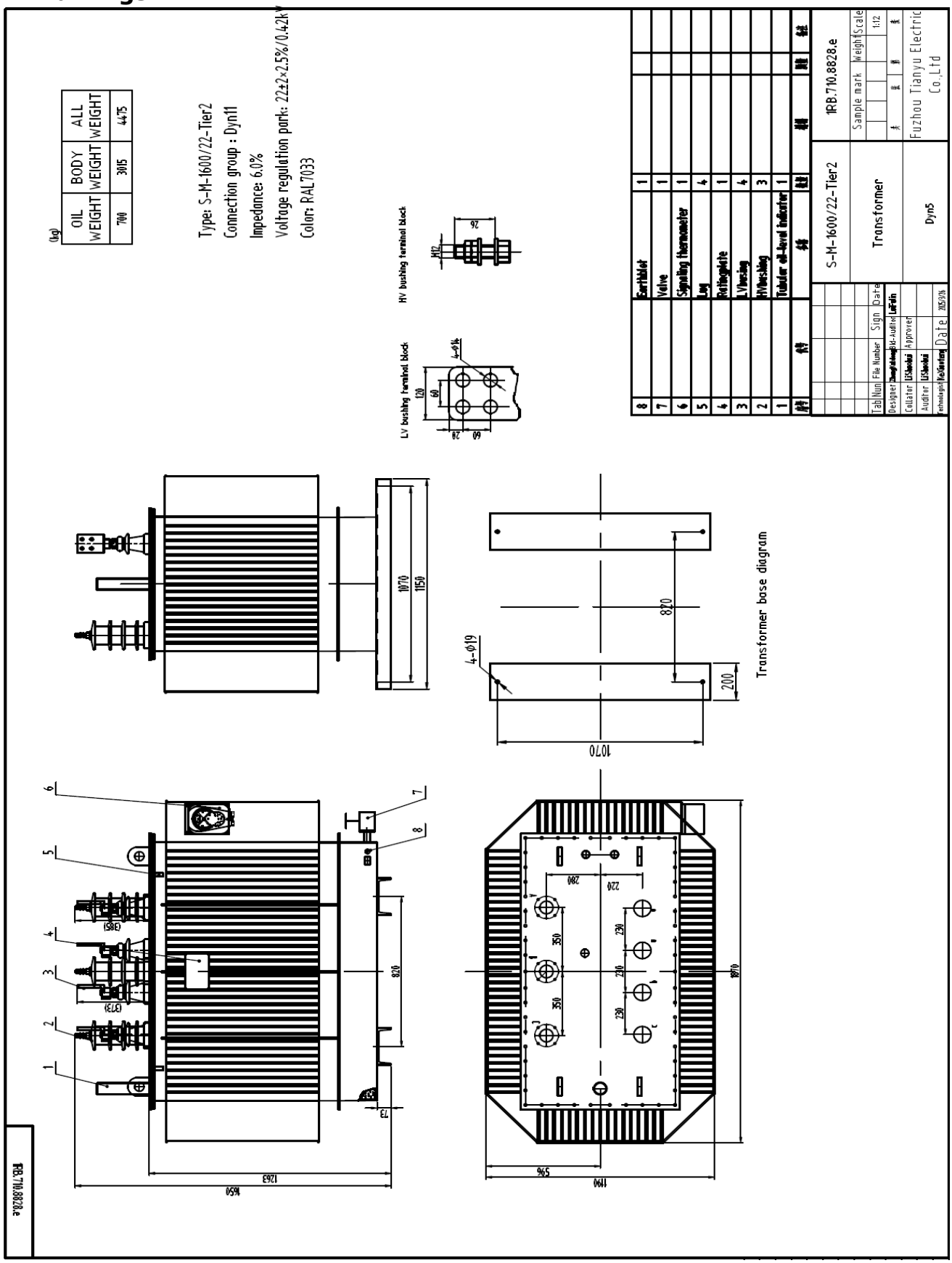
(kg)
OIL WEIGHT
BODY WEIGHT
ALL WEIGHT
700
3015
4475
Type: S-M-1600/22-Tier2
Connection group : Dyn11
Impedance: 6.0%
Voltage regulation park: 22±2×2.5%/0.42kV
Color: RAL7033
HV bushing terminal block
LV bushing terminal block
Earthbolt
Valve
Signaling thermometer
Lug
Rollingplate
LVhousing
HVhousing
Tubular oil-level indicator
S-M-1600/22-Tier2
Transformer
Dyn5
1RB.710.8828.e
Sample mark
Weight
Scale
1:12
Fuzhou Tianyu Electric Co.Ltd
Transformer base diagram
1070
820
200
4-Φ19
1263
1450
1190
596
280
220
350
230
210
1RB.710.8828.e

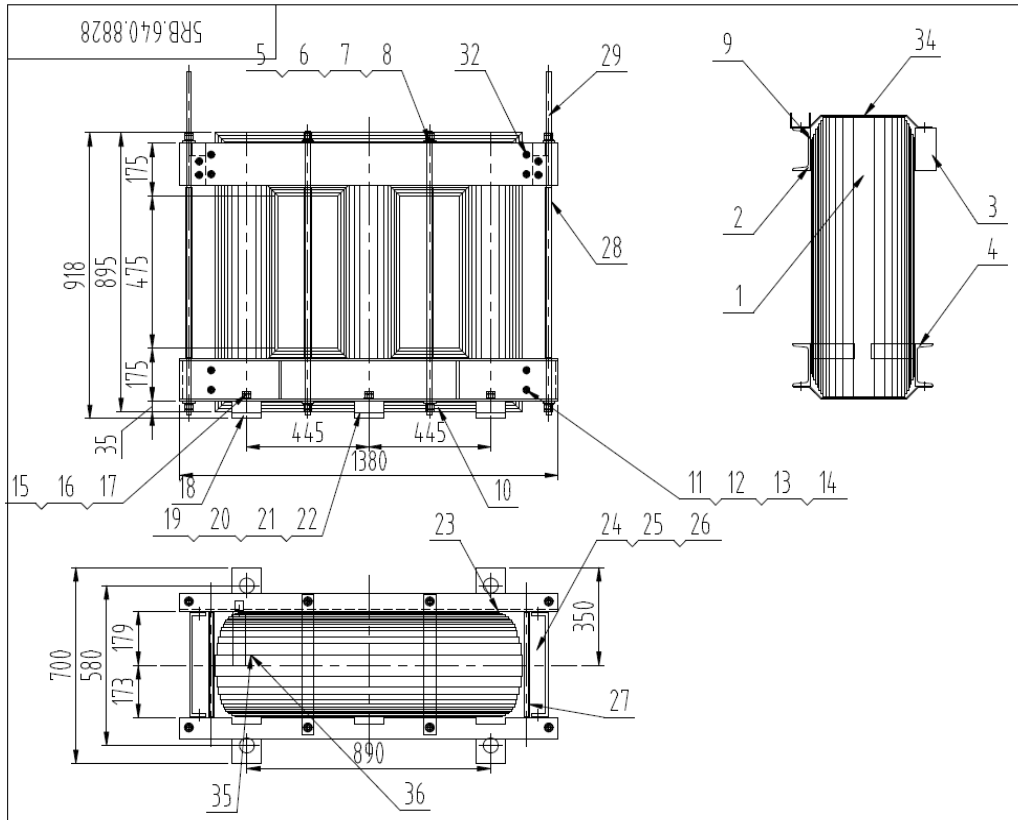

Technical requirement

1.Press 0RB.500.025

2.Brush double H glue on the iron core

30	8RB.123.479D	Bracing plate 460×50×5,H=40	3	Laminated wood	0.13	
29	8RB.932.285.3D	Double-screw bolt M20×1060/300+100	4	Round steel Φ20/Q235A	2.60	
28		Phenolic paper tube L=530	4	Φ24×2 Phenolic paper tube		
27		Phenolic paper tube L=340	8	Φ14×2 Phenolic paper tube		
26	GB/T5783	Bolt M12×120	4		0.15	
25	GB/T5783	Bolt M12×40	4		0.10	
24	5RB.100.8828.1	Top jointing beam of upper yoke	2		3.44	
23	8BT.570.1200	Core earthing strip	1			
22	8RB.195.8828.2	Foot cushion block	3	Laminated wood	0.20	
21	8RB.195.8828.1	Foot cushion block	3	Laminated wood	0.23	
20	8RB.786.071.2D	Foot pad insulation L=255	3	Insulating paper	0.10	
19	5RB.022.8828.2	Foot pad	1		8.26	
18	5RB.022.8828.1	Foot pad	2		12.28	
17	GB/T853	Washer 16	6		0.02	
16	GB/T6172.1	Thin nut M16	6		0.02	
15	GB/T6170	Nut M16	6		0.03	
14	GB/T97.1	Washer 12	12		0.01	
13	GB/T6172.1	Thin nut M1	16		0.01	
12	GB/T6170	Nut M12	16		0.02	
11	8BT.931.1223.1	Double-screw bolt M12×440/60	4	Round steel Φ12/Q235A	0.39	
10		Insulating paper 1.0×80×380	16	Insulating paper	0.05	
9	8RB.750.8828.1	Clamp insulation	4	Insulating paper	0.38	
8	GB/T97.1	Washer 20	12		0.02	
7	GB/T6172.1	Thin nut M20	24		0.02	
6	GB/T6170	Nut M20	24		0.03	
5	8RB.932.285.3D	Double-screw bolt M20×920/60+60	4	Round steel Φ20/Q235A	2.23	
4	5RB.070.8828.3	Lower yoke clamping	2		24.20	
3	8RB.070.8828.2	Upper yoke clamping(LV)	1	Laminated wood	13.74	
2	5RB.070.8828.1	Upper yoke clamping(HV)	1		21.50	
1	8RB.640.8828	Core lamination	1	B20R070	1725.00	

45		Phenolic paper tube L=455	4	Φ24×2 Phenolic paper tube		
44	DIN6796	Disc shaped spring washer 20	8			
42	8RB.160.533D	Angle steel140×416×690/26	1	Angle steel 50×5/Q235A	2.60	
41	8RB.160.533D	Angle steel134×416×690/26	1	Angle steel 50×5/Q235A	2.60	
40	GB/T97.1	Washer 12	12			
39	GB/T6172	Thin nut M12	8			
38	GB/T6170	Nut M12	8			
37	GB/T96.1	Washer12	8			
36	GB/T97.1	Washer 10	1			
35	GB/T5783	Bolt M10×25	1			
34	8RB.100.8828.2	Yoke tendile belt	4	4mm steel plate/Q235A	0.93	
33	GB/T96.1	Washer 20	4			
32	8BT.931.1223.1	Double-screw bolt M12×500/50	4	Round steel Φ12/Q235A	0.44	
31	8RB.123.479D	Bracing plate 460×50×4,H=40	6	Laminated wood	0.11	

Tab	Nun	File Number	Sign	Date	
Designer	Zheng Kaixiong	Bid-Auditor	Lai Fulin		
Collator	Li Shaohui	Approver			
Auditor	Li Shaohui				
Technologist	Lin Wengtao	Date	2025/3/26		

S20-M-1600/22

5RB.640.8828

Transformer core

Sample mark				Weight	Scale
					1:15
共	张	第	张		

Fuzhou Tianyu Electric Co.,Ltd

1.The test report will be invalid without the original signature.

2.The test report will be invalid with alter of any character or data.

3.Any dissension to this test report should be formally submitted to the laboratory within 25 days once receiving the report.

4.This test report applies only to the tested object. The responsibility for conformity of any apparatus having the same designations with that tested rests with the manufacturer.

5.Tested object and relevant content in this report may involve patent. The laboratory will not responsible for identifying these patents or any others.

TÜV Rheinland (Shanghai) Co., Ltd.
Unternehmensgruppe
TÜV Rheinland Group

TÜV Rheinland Building, No. 177, Lane 777, West Guangzhong Road, Jing'an District, 200072 Shanghai, P.R. China

Tel : (86/21) 61081188
Fax : (86/21) 61081199

e-mail : service-gc@tuv.com
Internet : http://www.tuv.com
GC Hotline:86 4008831300
86 8009993668