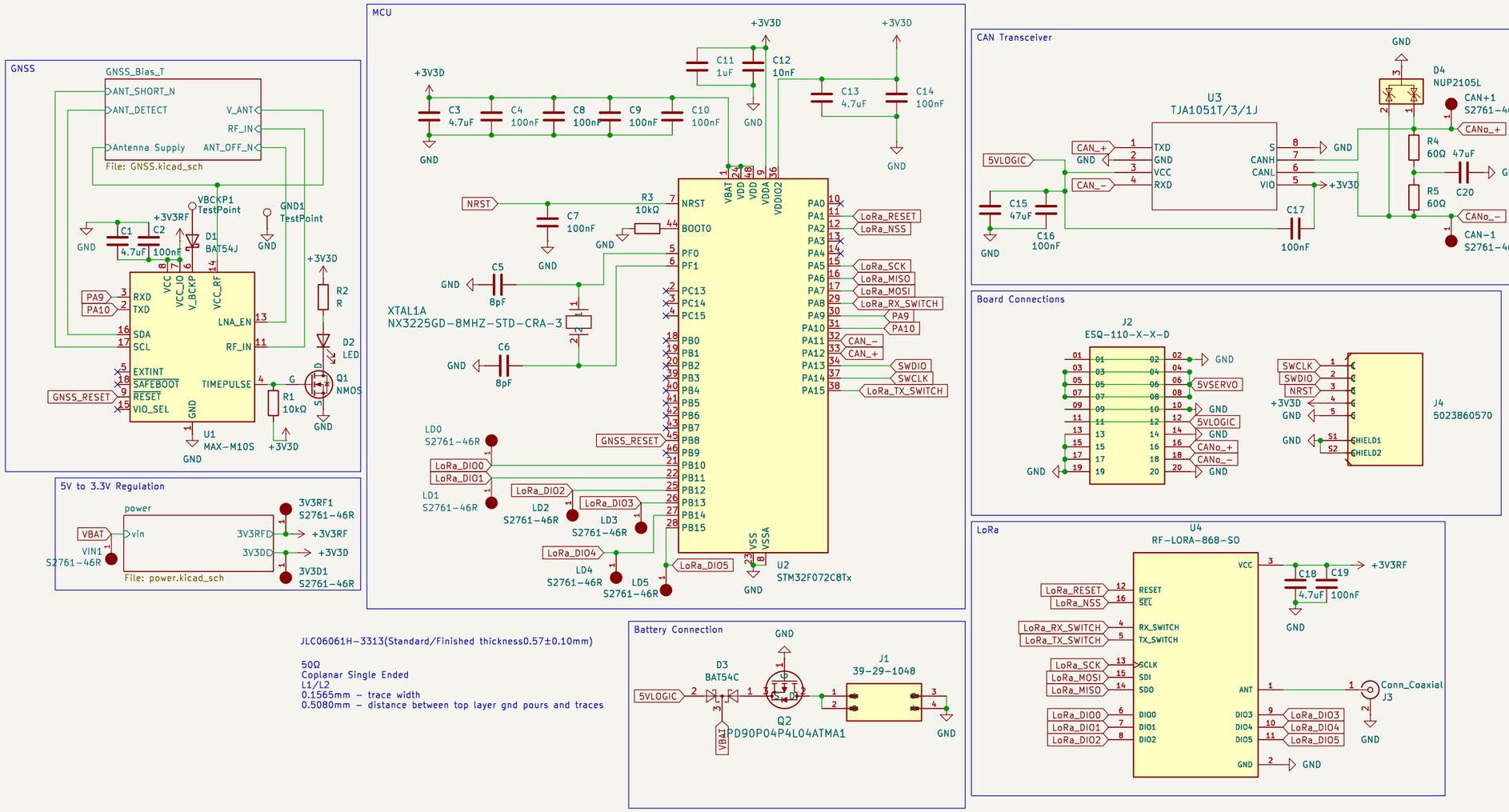

JLC06061H-3313(Standard/Finished thickness0.57±0.10mm)

50Ω
Coplanar Single Ended
L1/L2
0.1565mm – trace width
0.5080mm – distance between top layer gnd pours and traces

Sheet: /		
File: teachtaire.kicad_sch		
Title:		
Size: A3	Date:	**Rev:**
KiCad E.D.A. 9.0.6		Id: 1/3