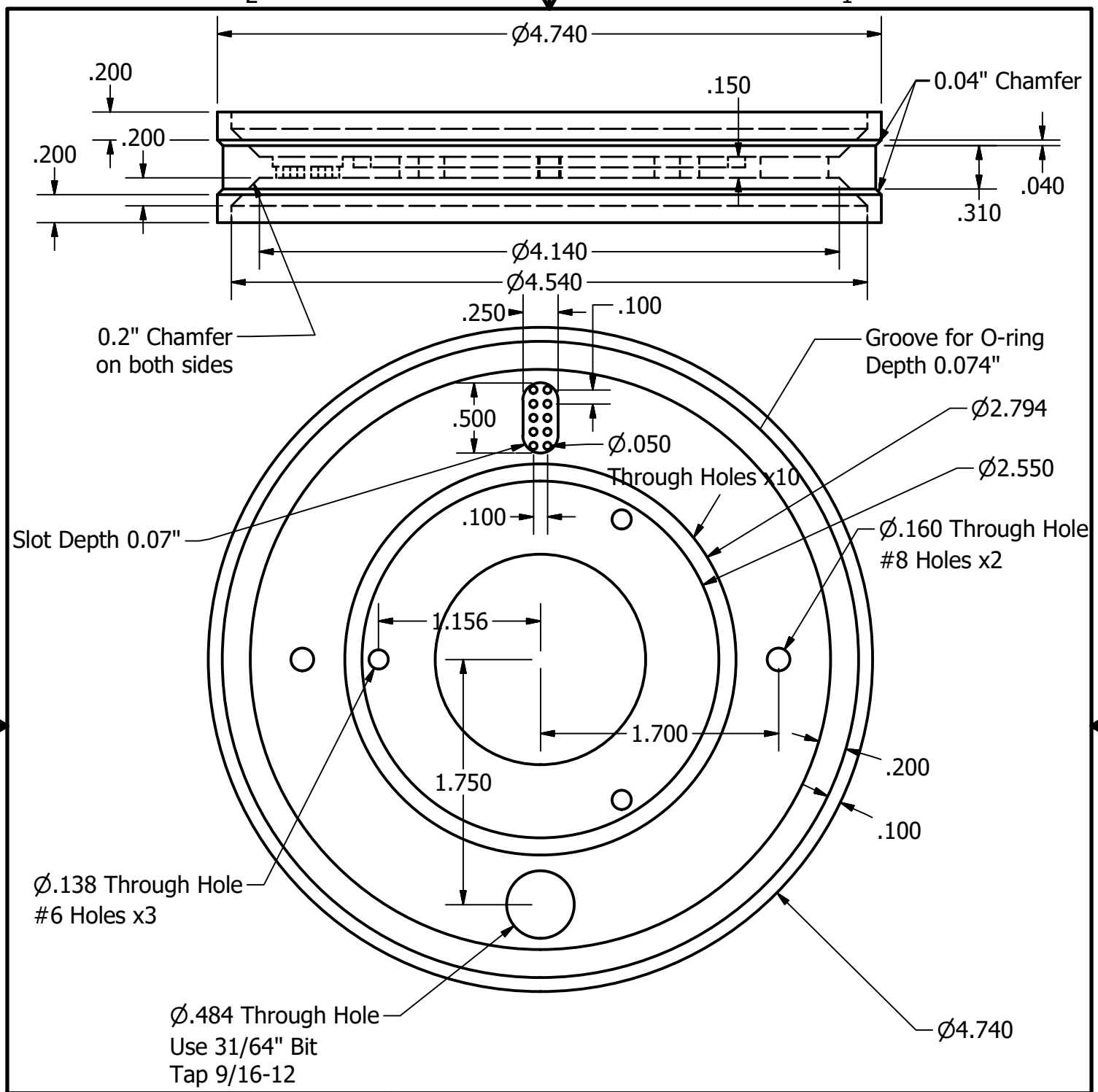

DRAWN Joseph	3/25/2017	Delrin All tolerances +/- 0.01"
CHECKED		TITLE
QA		Helios: Balloon Sealing Disc
MFG		
APPROVED		
		SIZE A / DWG NO Disc / REV
		SCALE 1 : 1 / SHEET 1 OF 1