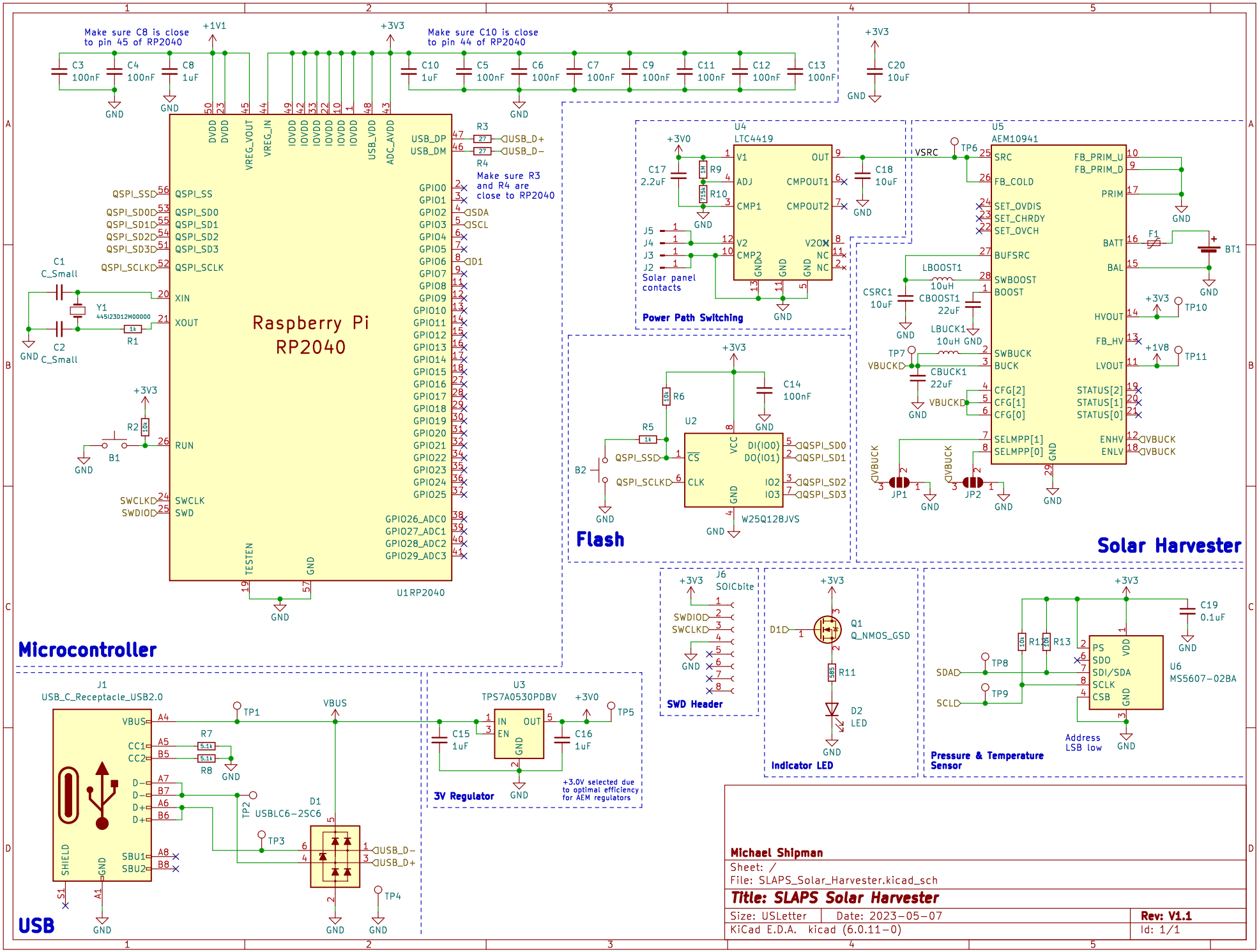
Make sure C8 is close to pin 45 of RP2040
Make sure C10 is close to pin 44 of RP2040
Make sure R3 and R4 are close to RP2040
Raspberry Pi RP2040
U1RP2040
Microcontroller
U4 LTC4419
Solar panel contacts
Power Path Switching
U5 AEM10941
Solar Harvester
U2 W25Q128JVS
Flash
J6 SOICbite
SWD Header
Q1 Q_NMOS_GSD
Indicator LED
U6 MS5607-02BA
Pressure & Temperature Sensor
Address LSB low
J1 USB_C_Receptacle_USB2.0
D1 USBLC6-2SC6
U3 TPS7A0530PDBV
3V Regulator
+3.0V selected due to optimal efficiency for AEM regulators
USB
Michael Shipman
Sheet: /
File: SLAPS_Solar_Harvester.kicad_sch
Title: SLAPS Solar Harvester
Size: USLetter
Date: 2023-05-07
Rev: V1.1
KiCad E.D.A. kicad (6.0.11-0)
Id: 1/1