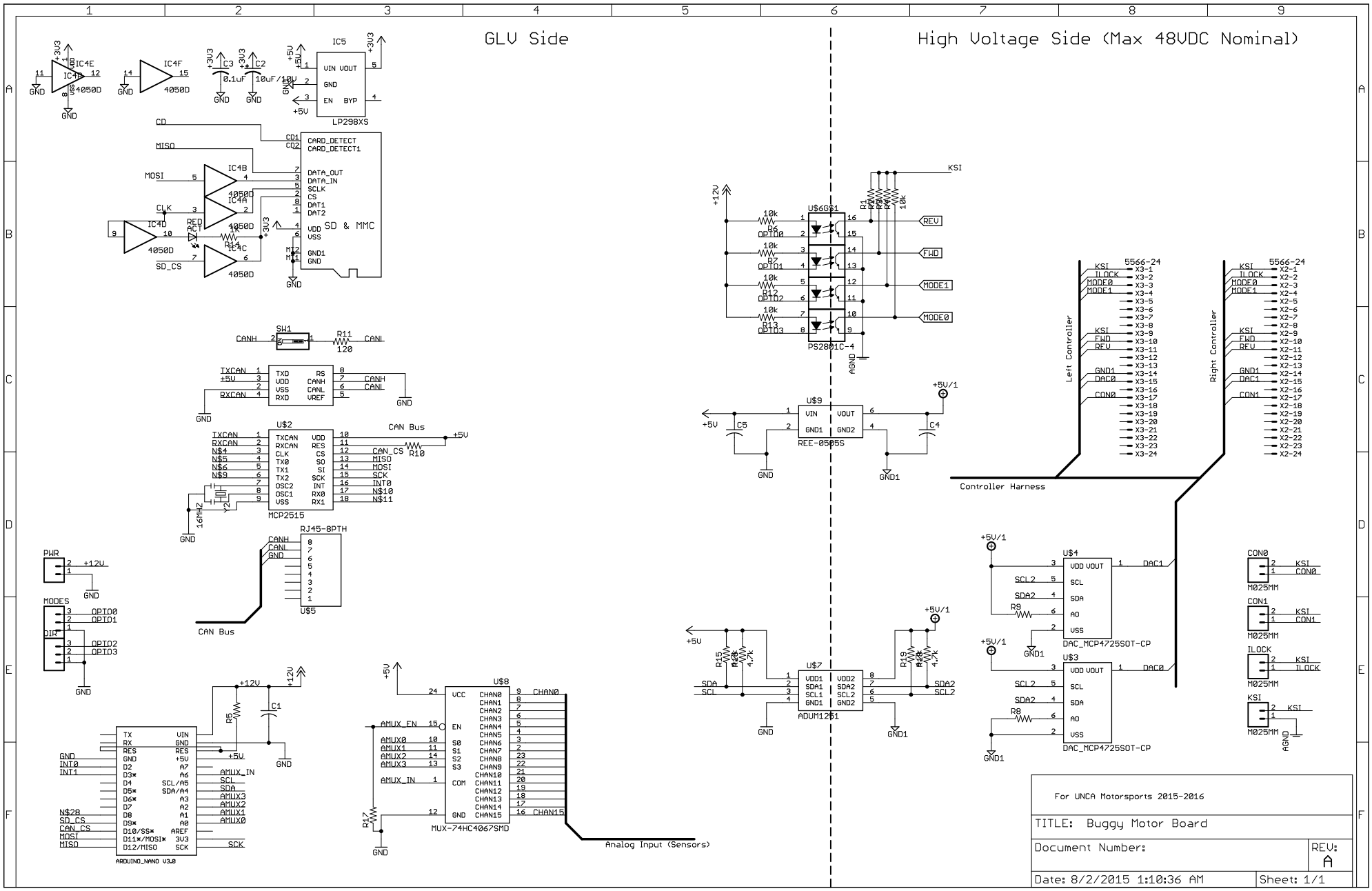
GLV Side
High Voltage Side (Max 48VDC Nominal)
IC4E
IC4B
IC4F
4050D
C3
C2
0.1uF
10uF/10V
IC5
VIN VOUT
GND
EN BYP
LP298XS
CD
MISO
MOSI
CLK
SD_CS
CARD_DETECT
CARD_DETECT1
DATA_OUT
DATA_IN
SCLK
CS
DAT1
DAT2
VDD
VSS
GND1
SD & MMC
RED
ACT
R14
SW1
CANH
CANL
R11
120
TXD
VDD
VSS
RXD
RS
CANH
CANL
VREF
TXCAN
RXCAN
+5V
U$2
TXCAN
RXCAN
CLK
TX0
TX1
TX2
OSC2
OSC1
VSS
VDD
RES
CS
SO
SI
SCK
INT
RX0
RX1
CAN Bus
R10
CAN_CS
MISO
MOSI
SCK
INT0
N$10
N$11
MCP2515
16MHZ
RJ45-8PTH
U$5
PWR
+12V
MODES
OPTO0
OPTO1
OPTO2
OPTO3
DIR
TX
RX
RES
GND
D2
D3*
D4
D5*
D6*
D7
D8
D9*
D10/SS*
D11*/MOSI*
D12/MISO
VIN
A7
A6
SCL/A5
SDA/A4
A3
A2
A1
A0
AREF
3V3
SCK
INT0
INT1
N$28
SD_CS
CAN_CS
MOSI
MISO
AMUX_IN
SCL
SDA
AMUX3
AMUX2
AMUX1
AMUX0
ARDUINO_NANO V3.0
R5
C1
U$8
VCC
EN
S0
S1
S2
S3
COM
CHAN0
CHAN1
CHAN2
CHAN3
CHAN4
CHAN5
CHAN6
CHAN7
CHAN8
CHAN9
CHAN10
CHAN11
CHAN12
CHAN13
CHAN14
CHAN15
AMUX_EN
AMUX0
AMUX1
AMUX2
AMUX3
AMUX_IN
R17
MUX-74HC4067SMD
Analog Input (Sensors)
U$6G$1
R6
R7
R12
R13
10k
OPTO0
OPTO1
OPTO2
OPTO3
PS2801C-4
R1
R2
R3
R4
KSI
REV
FWD
MODE1
MODE0
AGND
U$9
VIN
VOUT
GND1
GND2
REE-0505S
C5
C4
+5V/1
Left Controller
Right Controller
5566-24
ILOCK
MODE0
MODE1
FWD
REV
GND1
DAC0
CON0
CON1
Controller Harness
U$4
U$3
VDD VOUT
SCL
SDA
A0
VSS
DAC_MCP4725SOT-CP
DAC1
SCL2
SDA2
R9
R8
M025MM
U$7
VDD1
SDA1
SCL1
GND1
VDD2
SDA2
SCL2
GND2
ADUM1251
R15
R16
R18
R19
R20
R21
4.7k
For UNCA Motorsports 2015-2016
TITLE: Buggy Motor Board
Document Number:
REV: A
Date: 8/2/2015 1:10:36 AM
Sheet: 1/1