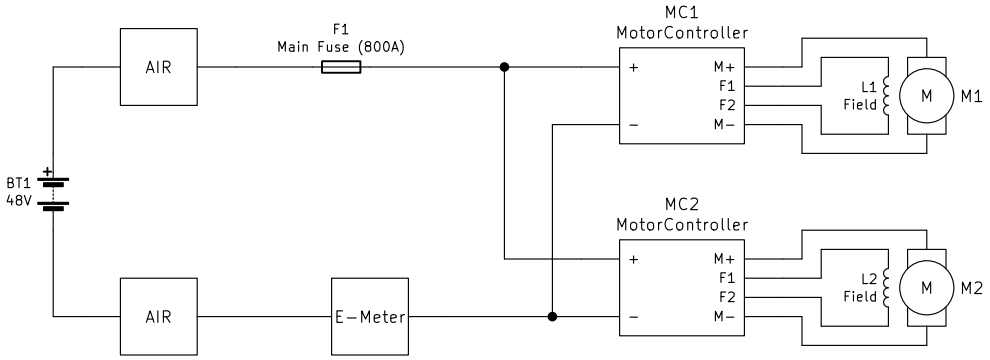

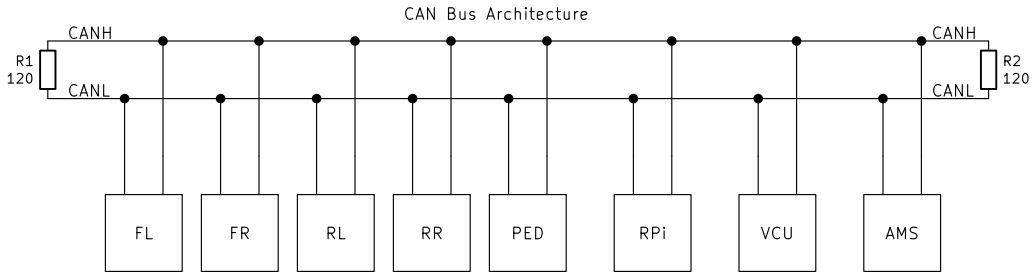

ShutdownCircuit

file5874D542.sch

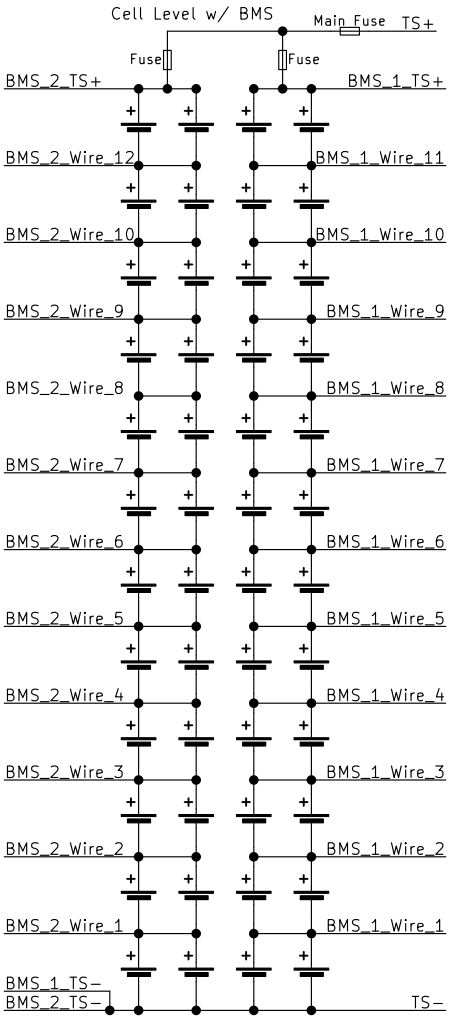

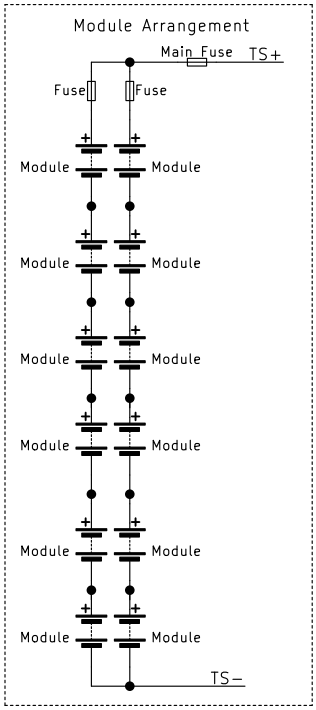

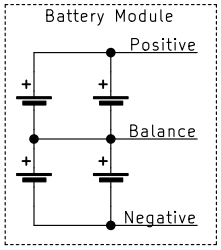

Sheet58ACE449

Accumulator.sch

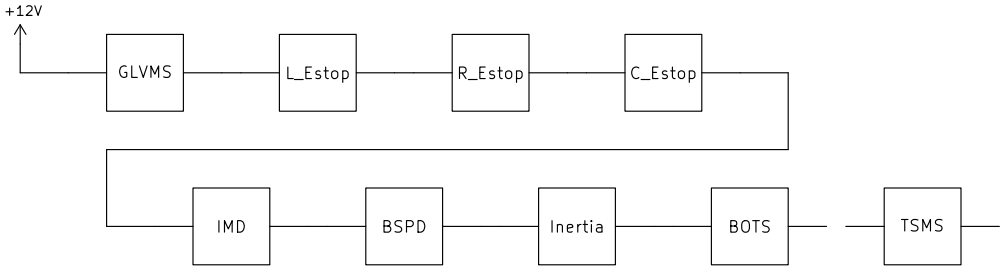
+12V
GLVMS
L_Estop
R_Estop
C_Estop
IMD
BSPD
Inertia
BOTS
TSMS

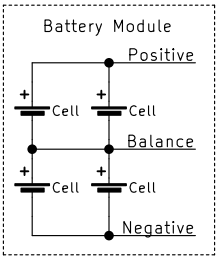
Battery Module
Positive
Cell
Cell
Balance
Cell
Cell
Negative

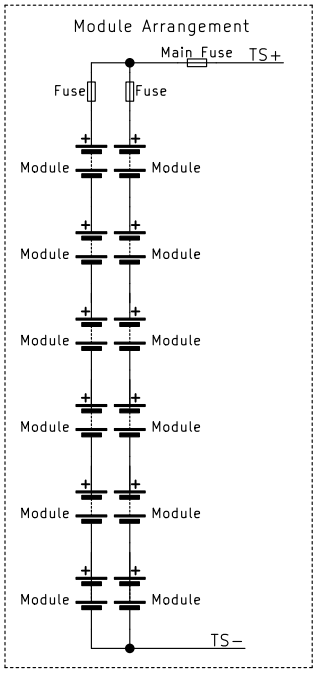
Module Arrangement
Main Fuse
TS+
Fuse
Fuse
Module
Module
Module
Module
Module
Module
Module
Module
Module
Module
TS−

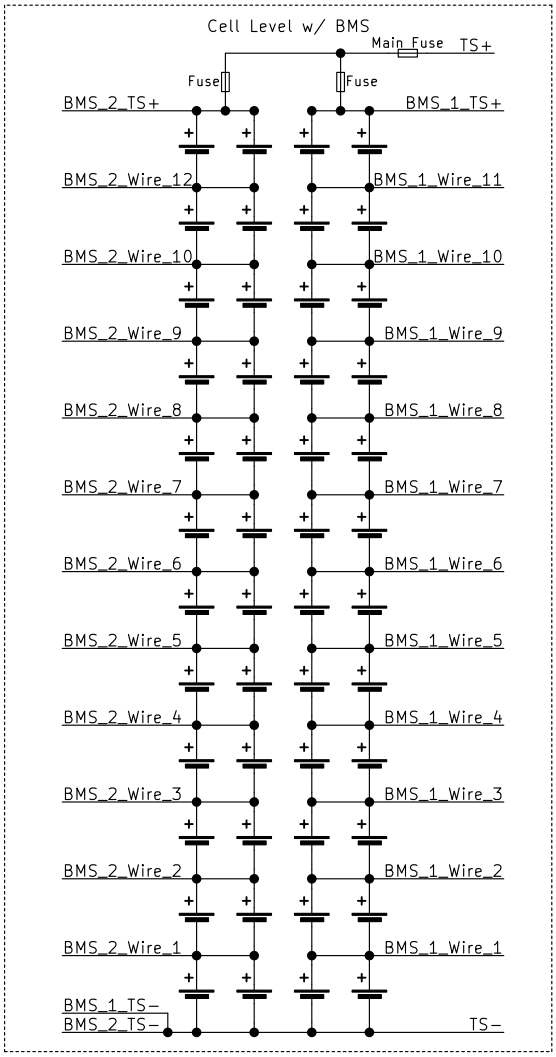
Cell Level w/ BMS
Main Fuse
TS+
Fuse
Fuse
BMS_2_TS+
BMS_1_TS+
BMS_2_Wire_12
BMS_1_Wire_11
BMS_2_Wire_10
BMS_1_Wire_10
BMS_2_Wire_9
BMS_1_Wire_9
BMS_2_Wire_8
BMS_1_Wire_8
BMS_2_Wire_7
BMS_1_Wire_7
BMS_2_Wire_6
BMS_1_Wire_6
BMS_2_Wire_5
BMS_1_Wire_5
BMS_2_Wire_4
BMS_1_Wire_4
BMS_2_Wire_3
BMS_1_Wire_3
BMS_2_Wire_2
BMS_1_Wire_2
BMS_2_Wire_1
BMS_1_Wire_1
BMS_1_TS−
BMS_2_TS−
TS−