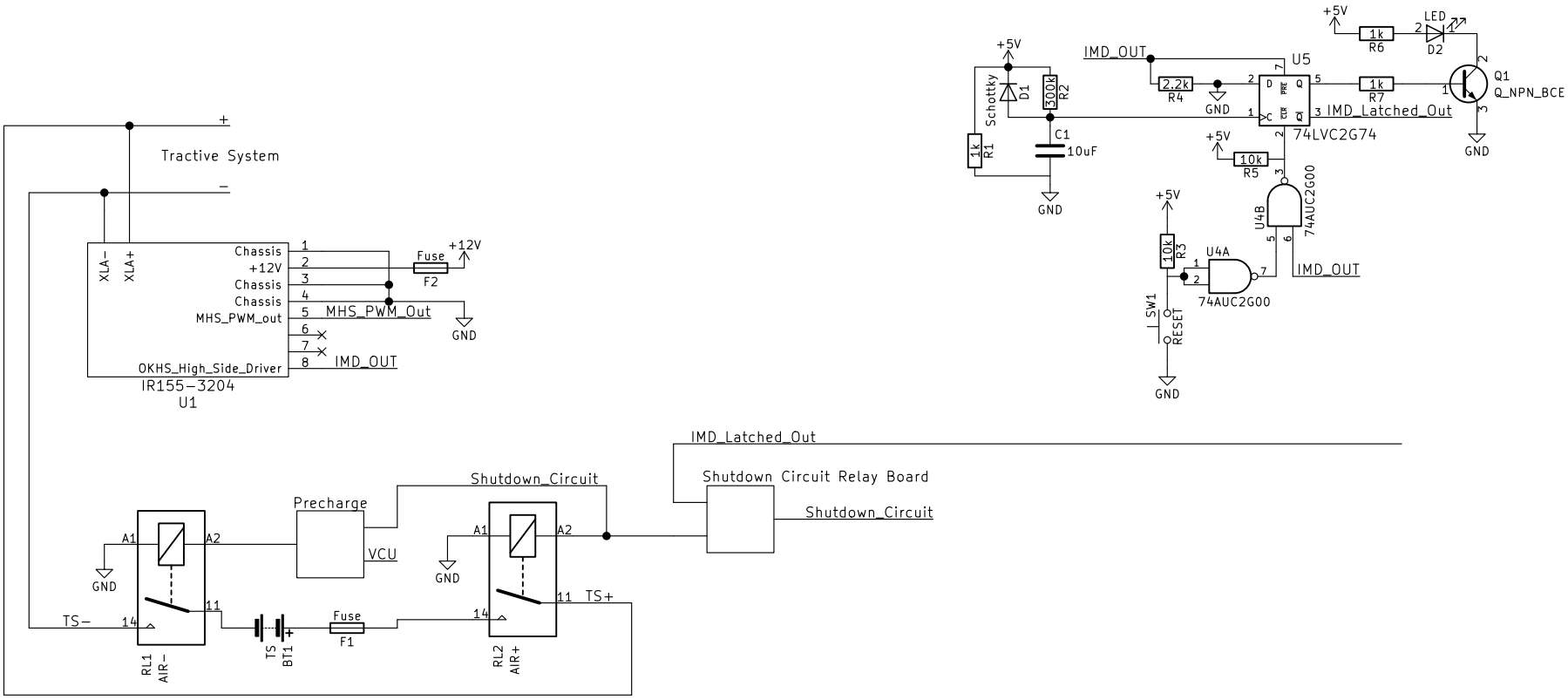
Tractive System
+
−
XLA−
XLA+
Chassis
+12V
Chassis
Chassis
MHS_PWM_out
OKHS_High_Side_Driver
IR155−3204
U1
Fuse
F2
+12V
MHS_PWM_Out
GND
IMD_OUT
Precharge
VCU
Shutdown_Circuit
A1
A2
GND
TS−
14
11
RL1
AIR−
TS
BT1
Fuse
F1
RL2
AIR+
TS+
IMD_Latched_Out
Shutdown Circuit Relay Board
Shutdown_Circuit
+5V
Schottky
D1
300k
R2
1k
R1
C1
10uF
GND
IMD_OUT
2.2k
R4
U5
D
C
Q
74LVC2G74
1k
R7
IMD_Latched_Out
+5V
1k
R6
LED
D2
Q1
Q_NPN_BCE
GND
+5V
10k
R5
U4B
74AUC2G00
+5V
10k
R3
U4A
74AUC2G00
IMD_OUT
SW1
RESET
GND