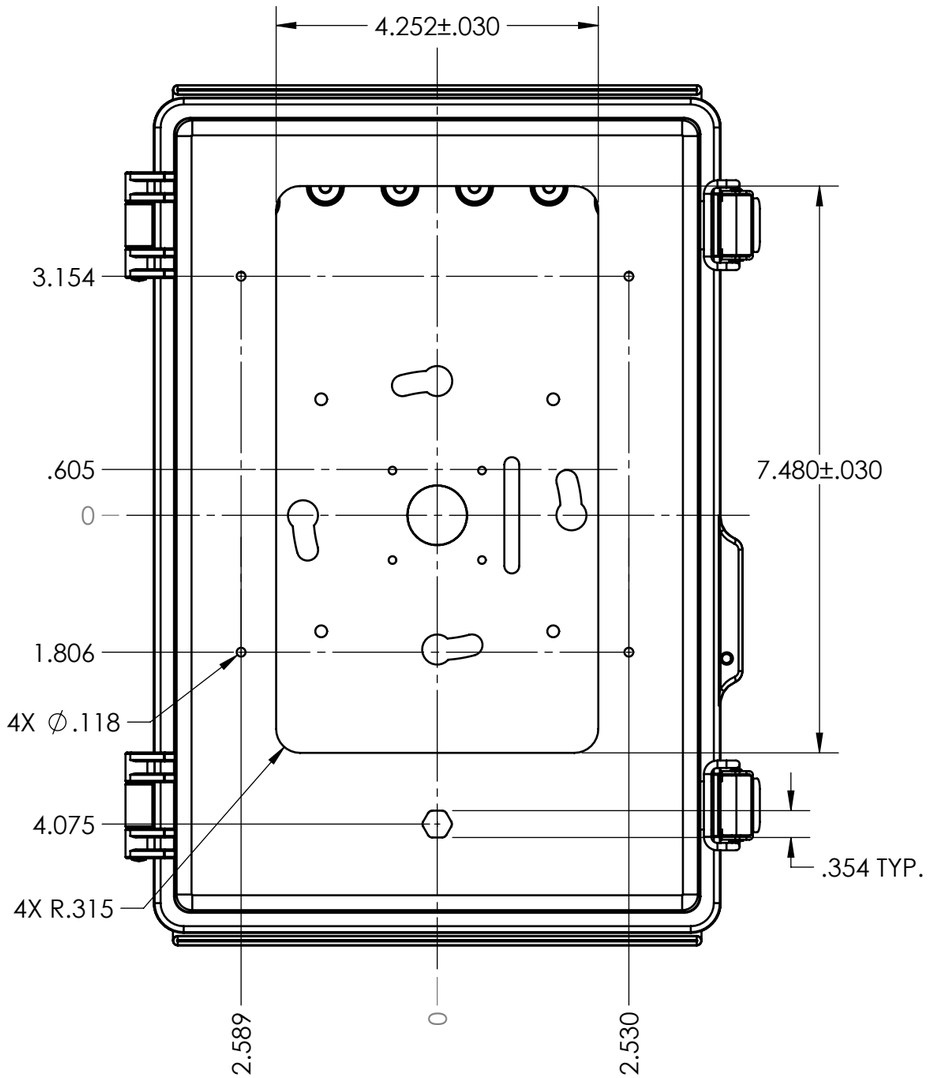

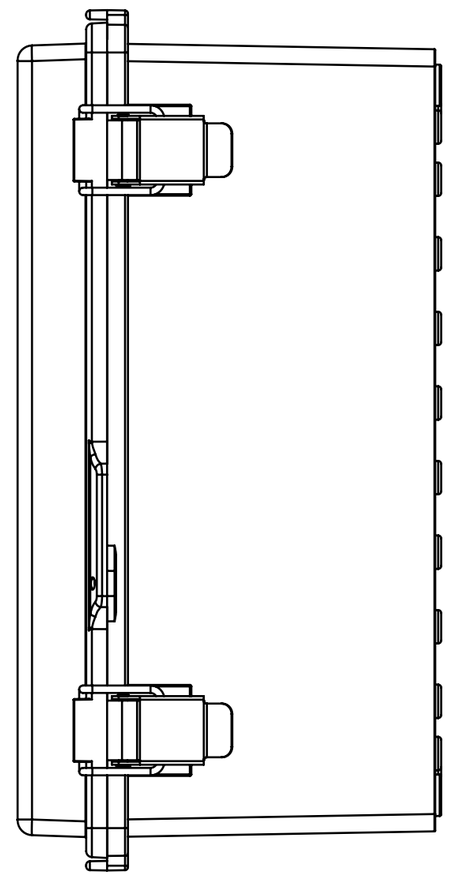

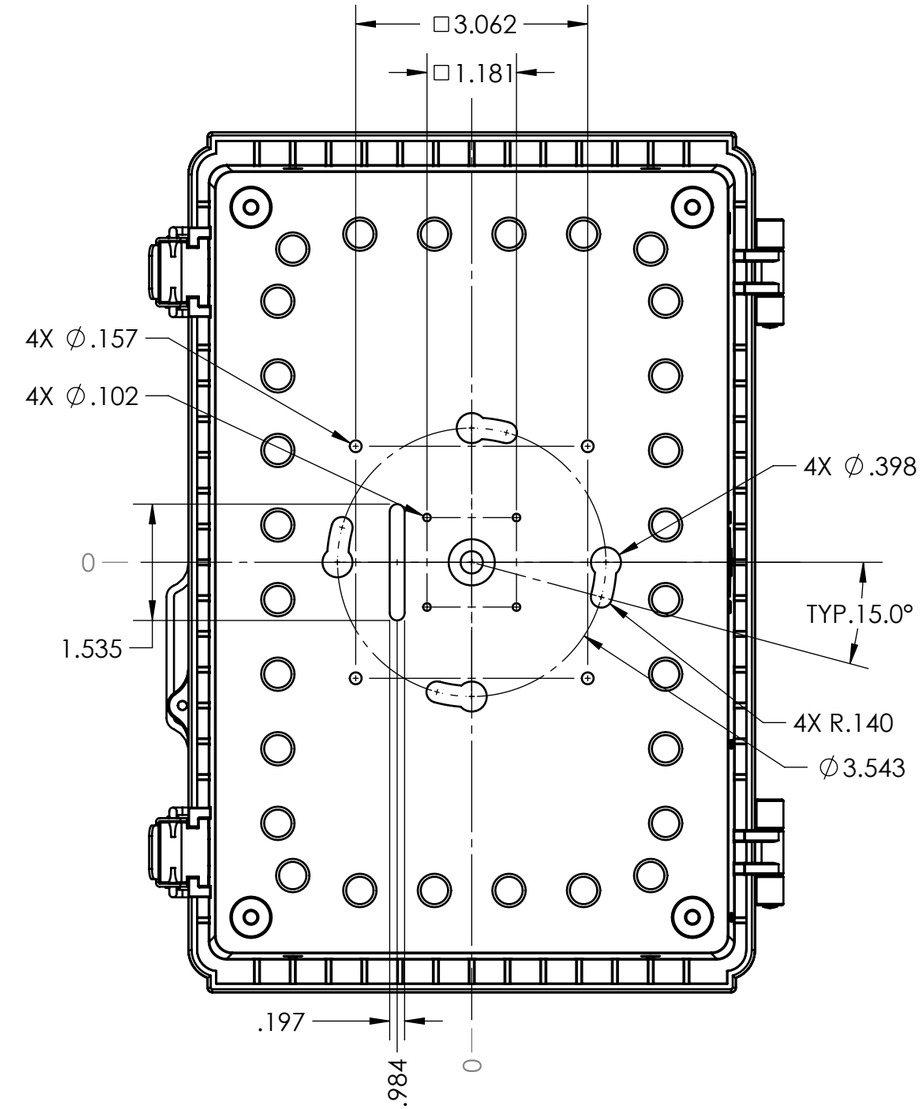

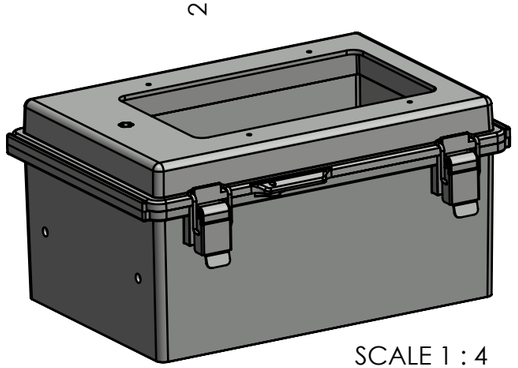

SCALE 1 : 4

NOTES:
1. ALL UNMARKED **RADII .063** UNLESS OTHERWISE SPECIFIED.
2. ALL LOCATION TOLERANCES ±.015 UNLESS OTHERWISE SPECIFIED.
3. DISCARDING/MACHINING OF INTERNAL LABEL(S) PERMISSIBLE.

REV.	DESCRIPTION	ZONE	BY	APPR'D	DATE
	REVISIONS				

UNLESS OTHERWISE SPECIFIED:
DIMENSIONS ARE IN: INCHES[mm]
TOLERANCES: ANGULAR: ±2°
TWO PLACE DECIMAL: ±.010
THREE PLACE DECIMAL: ±.005
PRINTED GRAPHICS: ±.010

PROPRIETARY AND CONFIDENTIAL
THE INFORMATION CONTAINED IN THIS DRAWING IS THE SOLE PROPERTY OF POLYCASE. ANY REPRODUCTION IN PART OR AS A WHOLE WITHOUT THE WRITTEN PERMISSION OF POLYCASE IS PROHIBITED.

CAD FILE: 25415S

PART NO.
J-25415S-02

PRODUCT
WQ-57S-02

CLIENT
Evan Goldstein

	NAME	DATE
DRAWN	S.T.S.	3/23/2022
CHECKED	R.W.H.	3/24/2022

SIZE
B

Secondary Operations Drawing

REV
-

SCALE: 1:2

SHEET 1 OF 2

polycase
1305 CHESTER IND. PARKWAY AVON, OHIO 44011-1083 U.S.A.
PH#: 1-800-248-1233, 440-934-0444 FAX#: 440-934-0088

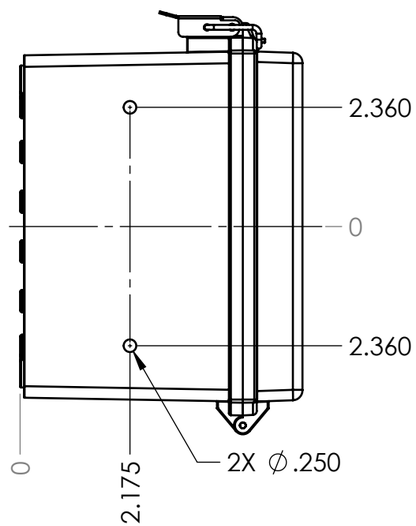

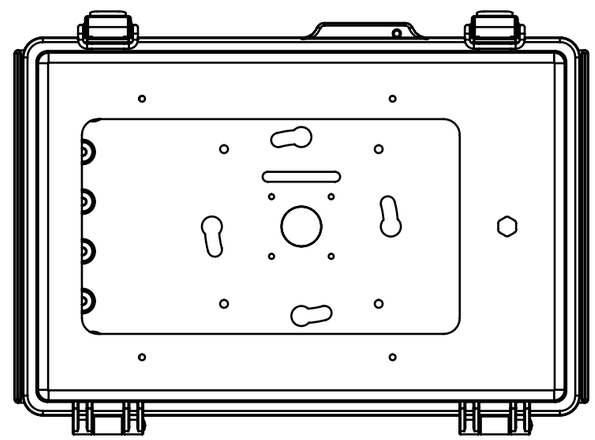

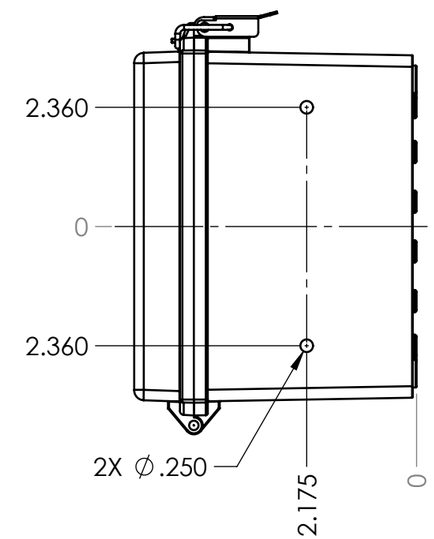

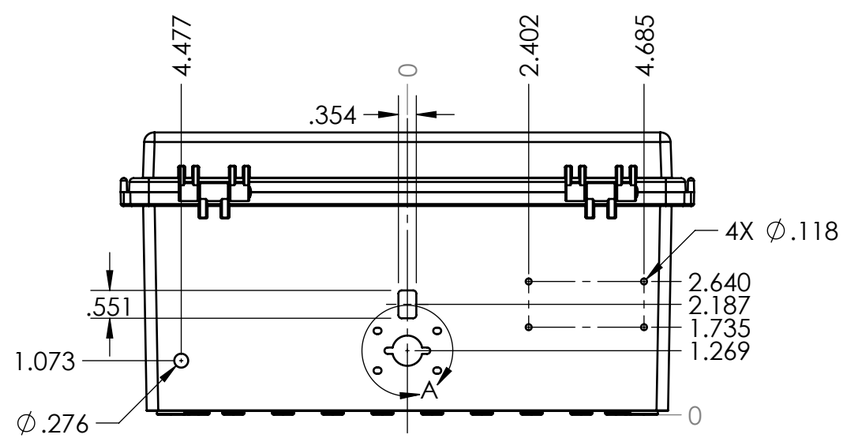

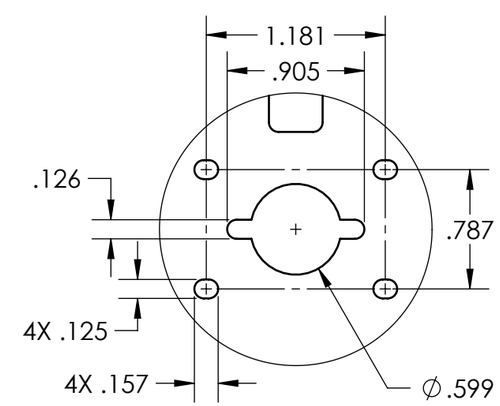

DETAIL A
SCALE 1 : 1

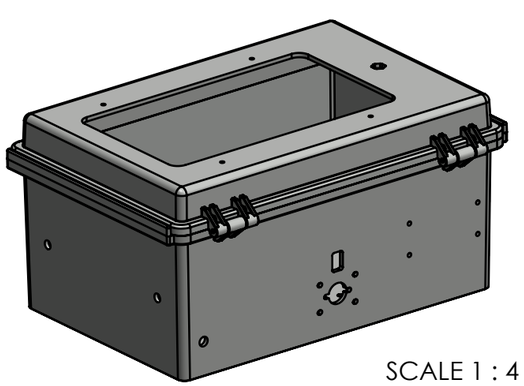

SCALE 1 : 4

NOTES:
1. ALL UNMARKED **RADII .063** UNLESS OTHERWISE SPECIFIED.
2. **ALL LOCATION TOLERANCES ±.015 UNLESS OTHERWISE SPECIFIED.**
3. DISCARDING/MACHINING OF INTERNAL LABEL(S) PERMISSIBLE.

REV.	DESCRIPTION	ZONE	BY	APPR'D	DATE
	REVISIONS				

UNLESS OTHERWISE SPECIFIED:
DIMENSIONS ARE IN: INCHES[mm]
TOLERANCES: ANGULAR: ±2°
TWO PLACE DECIMAL: ±.010
THREE PLACE DECIMAL: ±.005
PRINTED GRAPHICS: ±.010

PROPRIETARY AND CONFIDENTIAL
THE INFORMATION CONTAINED IN THIS DRAWING IS THE SOLE PROPERTY OF POLYCASE. ANY REPRODUCTION IN PART OR AS A WHOLE WITHOUT THE WRITTEN PERMISSION OF POLYCASE IS PROHIBITED.

CAD FILE: 25415S

PART NO.
J-25415S-02

PRODUCT
WQ-57S-02

CLIENT
Evan Goldstein

	NAME	DATE
DRAWN	S.T.S.	3/23/2022
CHECKED	R.W.H.	3/24/2022

SIZE
B

Secondary Operations Drawing

REV
-

SCALE: 1:3

SHEET 2 OF 2

polycase
1305 CHESTER IND. PARKWAY AVON, OHIO 44011-1083 U.S.A.
PH#: 1-800-248-1233, 440-934-0444 FAX#: 440-934-0088