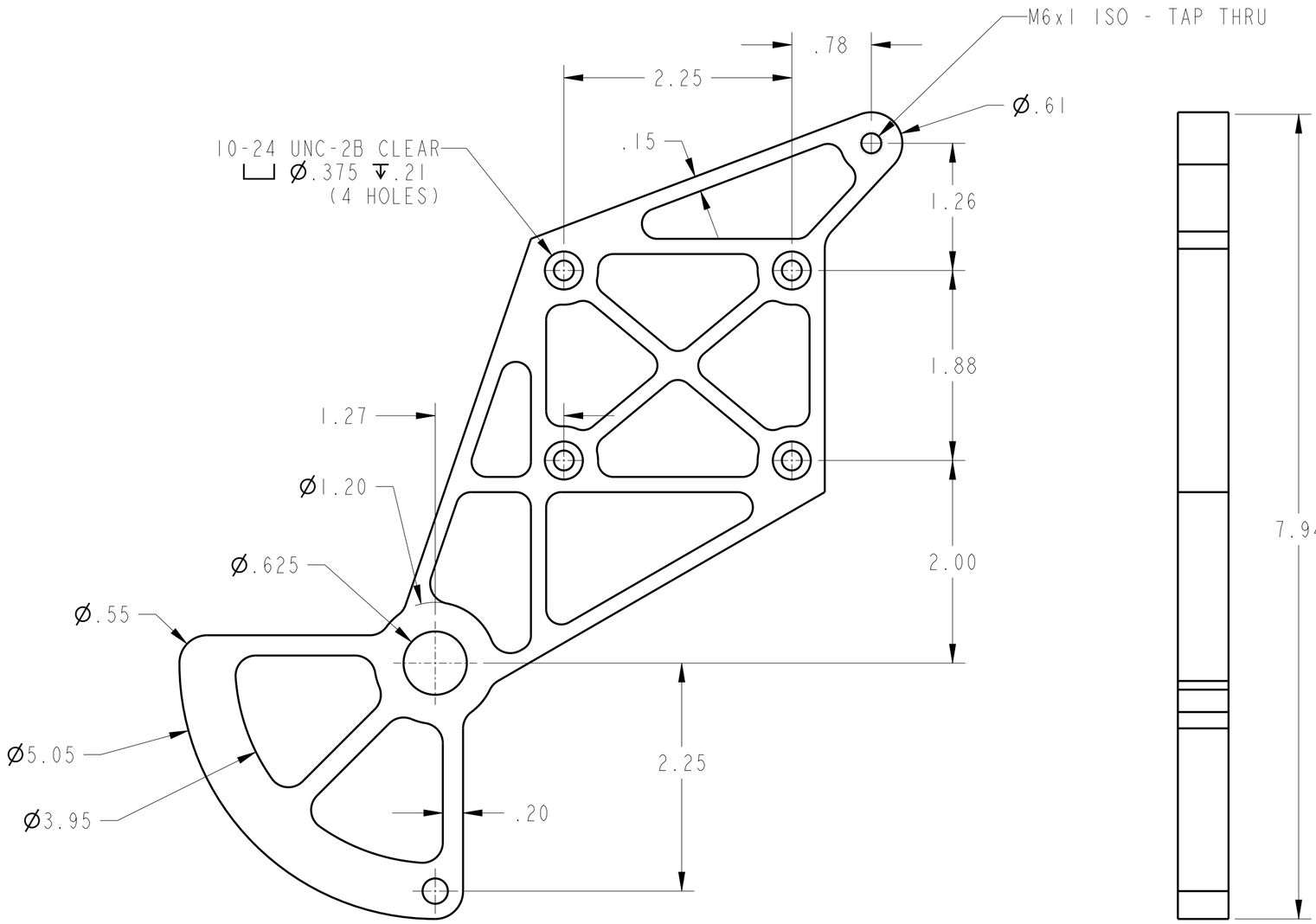

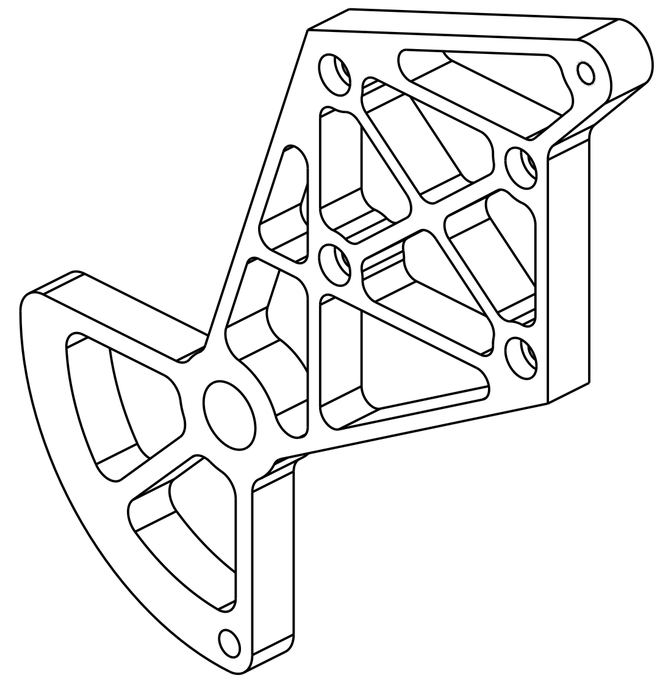

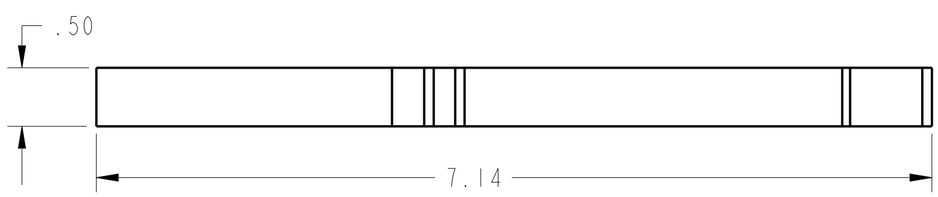

ALL EDGES SUITABLE FOR
WATERJET PIERCE POINT

TOLERANCES		COLLEGE OF ENGINEERING UNIVERSITY OF NORTH DAKOTA		
DECIMALS XX = ±0.1 X.XX = ±0.01 X.XXX = ±0.001 X.XXXX = ±0.0001 ANGLES X = ±5 X.X = ±0.5 X.XX = ±0.50		COLLECTOR_GASHINGE_INSIDE_MIRRO		
DATE ISSUED: Jan-05-23				
DRAWN BY: Gabriel Schettler	SIZE C	COURSE :	DWG NO. COLLECTOR_GASHINGE_INSIDE_L	
CHECKED BY:	SCALE 1.000	MATERIAL AL6061	SHEET 1 OF 1	

THIRD ANGLE PROJECTION

COLLECTOR_GASHINGE_INSIDE_L

SHEET 1 OF 1