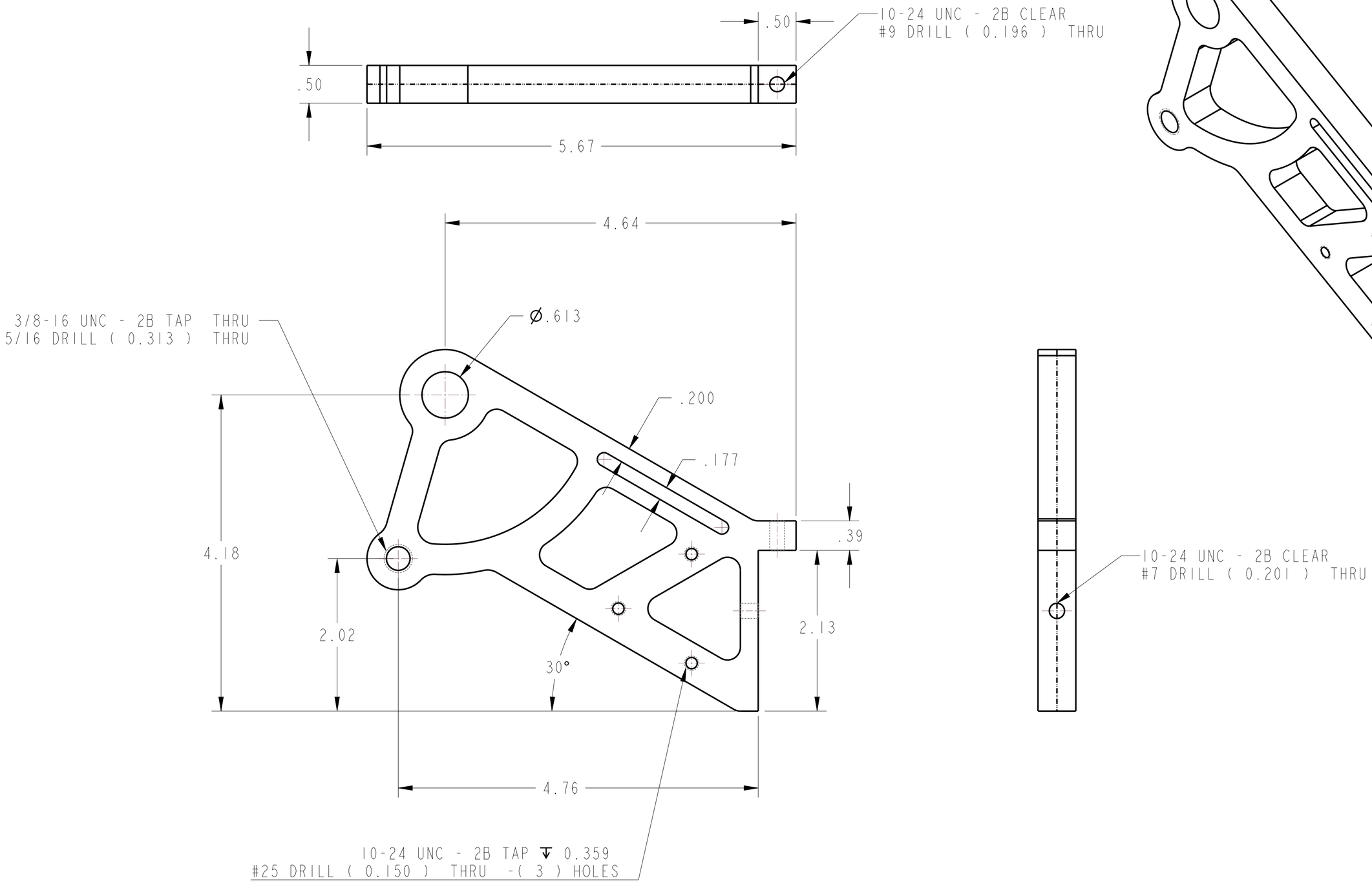

TOLERANCES		COLLEGE OF ENGINEERING UNIVERSITY OF NORTH DAKOTA		
DECIMALS: XX = ±0.1, XXX = ±0.01, XXXX = ±0.001, XXXXX = ±0.0001	ANGLES: X = ±5, XX = ±0.5, XXX = ±0.50	COLLECTOR_HINGE2CHASSIS_GJS		
DATE ISSUED: Jan-08-23				
DRAWN BY: Gabriel Schettler	SIZE: C	COURSE : SECTION :	DWG NO. COLLECTOR_HINGE2CHASSIS	
CHECKED BY:	SCALE: 1.000	MATERIAL: AL6061	SHEET 1 OF 1	

THIRD ANGLE PROJECTION

COLLECTOR_HINGE2CHASSIS

SHEET 1 OF 1