I2C FRAM FM24W256 Module

DEVLAB FACTOR

SKU: UE0111

Product Reference Manual (V1.0)

Description

The **DevLab I2C FRAM FM24W256 Module** is a high-endurance, non-volatile memory board based on the **FM24W256** ferroelectric RAM (F-RAM) chip. It provides **256 Kbits (32 KB)** of storage organized as **32K × 8 bits**, accessible through a standard **I²C interface**. Unlike traditional EEPROMs, this module combines the speed and endurance of SRAM with non-volatility, allowing **instant data writes with no delay** and up to **100 trillion (10^{14}) read/write cycles**.

Built for demanding embedded applications, the module operates from **2.7 V to 5.5 V**, supports clock speeds up to **1 MHz**, and guarantees **151 years of data retention**. It consumes minimal power, with typical active currents of **100 µA at 100 kHz** and **15 µA in standby**, making it ideal for battery-powered or data-intensive systems. Fully compatible with **ESP32**, **Arduino**, **STM32**, and **RP2040**, it serves as a direct hardware replacement for I²C EEPROMs without firmware modification.

DevLab format compatibility.

Simplicity and compatibility are the core principles of the **DevLab form factor**. This standard defines a **compact and communication-optimized board layout**, ensuring straightforward connection and interoperability among DevLab module

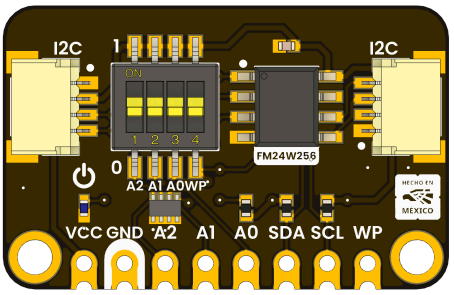

Key Features

- **Memory Capacity:** 256 Kbits (32 KB) organized as 32K × 8 bits.
- **Technology:** Ferroelectric RAM (F-RAM) — non-volatile, high-speed, high-endurance memory.
- **Endurance:** Up to 100 trillion (10^{14}) read/write cycles.
- **Data Retention:** 151 years (typical).
- **Interface:** I²C (2-wire serial), supporting up to 1 MHz clock.
- **NoDelay™ Writes:** Data is stored instantly at bus speed, with no write-cycle delay.
- **Low Power Consumption:** 100 µA active at 100 kHz, 15 µA typical standby.
- **Operating Voltage:** 2.7 V to 5.5 V.
- **Operating Temperature:** –40 °C to +85 °C (industrial range).
- **Compatibility:** Drop-in replacement for I²C EEPROM devices.
- **Package:** 8-pin SOIC integrated on DevLab-format board, RoHS compliant.
-

Software Support

- **Arduino IDE**
- **Micro Python**

Applications

- **Data Logging:** Ideal for systems requiring frequent or high-speed data recording.
- **Industrial Control:** Reliable storage for machine parameters, error logs, and counters.
- **Power Loss Recovery:** Retain data instantly without risk of corruption during outages.
- **Sensor Networks:** Store calibration and status data with rapid update rates.
- **Smart Meters and IoT Devices:** Maintain operational data without wear-out issues.
- **Embedded Systems:** Replace traditional EEPROMs where endurance and write latency are critical.

CONTENTS

Description..... 1
DevLab format compatibility..... 1
Key Features..... 1
Software Support..... 2
Applications..... 2
1 The Board..... 4
1.1 Accessories..... 4
2 Ratings..... 4
2.1 Recommended Operating Conditions..... 4
3. Functional Overview..... 4
3.3 Device Addressing..... 5
3.4 Write Operation..... 6
3.5 Read Operation..... 7
3.6 Write Protection..... 7
3.7 Functional Characteristics..... 8
3.2 Board Topology..... 9
4 Connectors & Pinouts..... 10
4.1 General Pinout..... 10
4.2 Pinout General Description..... 11
5 Board Operation..... 12
6 Mechanical Information..... 13
7 Company Information..... 14
8 Reference Documentation..... 14

1. The Board

1.1 Accessories

- 1×8-pin 2.54 mm male header

2 Ratings

2.1 Recommended Operating Conditions

Parameter	Description	Min	Typ	Max	Unit
Vdd	Input voltage to power on the module	2.7	3.3	5.5	V
Idd	Supply current	100	-	400	uA
Ili	Input Leakage Current (Except WP and A2-A0)	-1	0	+1	uA
	Input Leakage Current (for WP and A2-A0)	-1	-	+100	uA
Ilo	Output Leakage Current (Except WP and A2-A0)	-1	0	+1	uA
Vih	Input High voltage	0.7xVdd	-	Vdd+0.3	V
Vil	Input Low voltage	-0.3	-	0.3xVdd	V
Vol	Output Low voltage	-	-	0.4V	V
Tdr*	Data retention	10	-	151	Years
NVc	Endurance	10^14	-	-	Cycles

3. Functional Overview

The DevLab I2C FRAM FM24W256 module is based on a ferroelectric RAM architecture that combines the non-volatility of EEPROM with the speed and endurance of SRAM. The device is organized as **32K × 8-bit memory**, accessible through a standard I²C interface operating up to 1 MHz.

The module functions as an **I²C slave device**, where all communication is controlled by an external master. Data transactions follow standard I²C protocol sequences, including START, STOP, acknowledge, and sequential data transfer operations. Internally, the memory uses a **15-bit address space**, requiring two address bytes (MSB and LSB) to access any memory location. Once an address is set, the internal address pointer automatically increments after each byte transfer, enabling efficient sequential operations.

Unlike conventional EEPROM devices, the FM24W256 performs **write operations at bus speed**, meaning data is stored immediately after transmission without requiring internal write cycles or delays. This eliminates the need for acknowledged polling and allows continuous data flow.

The device supports **up to 10^{14} read/write cycles** and provides **data retention up to 151 years**, ensuring long-term reliability even in high-frequency write applications.

Additionally, the module includes hardware configuration through address selection pins (**A0, A1, A2**) and a global **write protection (WP)** control, enabling flexible integration into multi-device I²C systems.

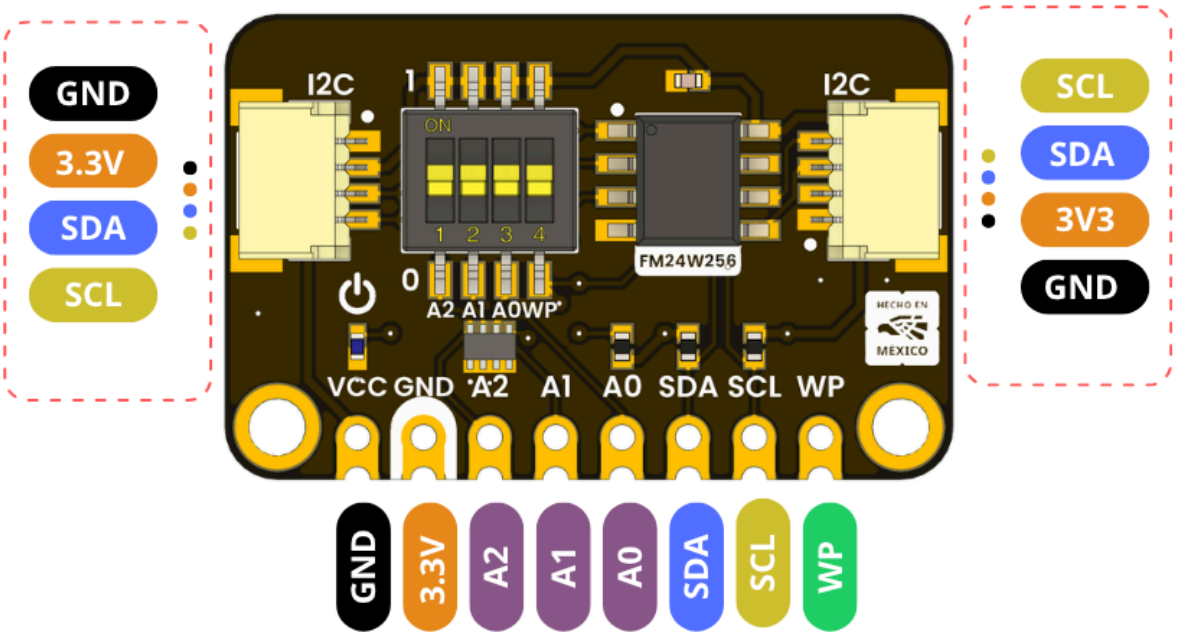

3.3 Device Addressing

The FM24W256 uses a standard I²C slave addressing scheme defined as follows:

1	0	1	0	A2	A1	A0	R/W

- **1010**: Device identifier
- **A2–A0**: Hardware configurable address bits
- **R/W**: Read (1) or Write (0)

Up to **8 devices** can coexist on the same I²C bus by configuring the address pins accordingly.

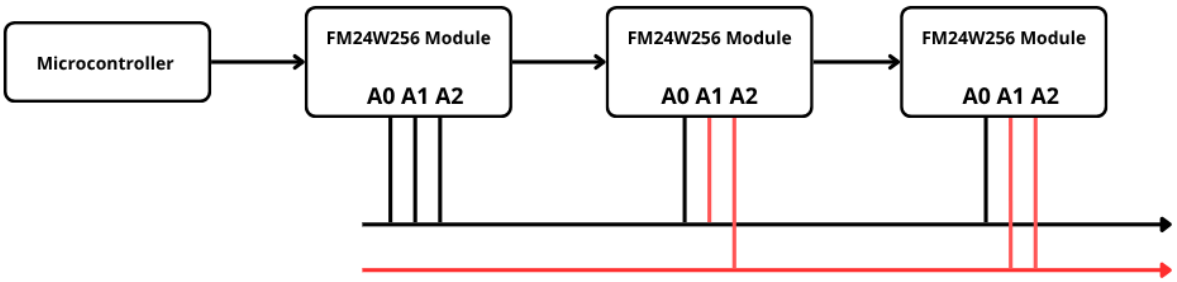

The FM24W256 uses a standard format for I²C slave addresses:

A2	A1	A0	Address
0	0	0	0x50
0	0	1	0x51
0	1	0	0x52
0	1	1	0x53
1	0	0	0x54
1	0	1	0x55
1	1	0	0x56
1	1	1	0x57

3.4 Write Operation

A write cycle is performed using the following sequence:

- START condition
- Slave address with R/W = 0
- Address MSB
- Address LSB
- Data byte(s)
- STOP condition

Any number of bytes can be written sequentially. The internal address pointer automatically increments after each byte transfer.

3.5 Read Operation

The device supports multiple read modes:

- **Current Address Read**
  - Reads data from the last accessed memory location.
- **Random Read**
  - Requires a prior write operation to load the target address into the internal address pointer.
- **Sequential Read**
  - Automatic address increment after each byte
  - Continuous data output until NACK or STOP condition

The read operation is terminated when the master issues a NACK followed by a STOP condition.

3.6 Write Protection

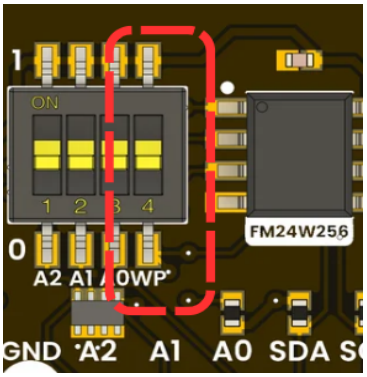

The module includes a global **Write Protect (WP)** control:

- **WP = HIGH (VDD):** All write operations are disabled
- **WP = LOW (GND):** Normal read/write operation

When write protection is enabled, the device does not acknowledge write commands.

3.7 Functional Characteristics

- Non-volatile ferroelectric memory (F-RAM)
- Write operations performed at bus speed (no delay)
- Endurance: up to **10^{14} cycles**
- Data retention: up to **151 years**
- Low power consumption
- I²C interface supporting **100 kHz, 400 kHz, and 1 MHz**
- Operating voltage range: **2.7 V to 5.5 V**

3.8 Board Topology

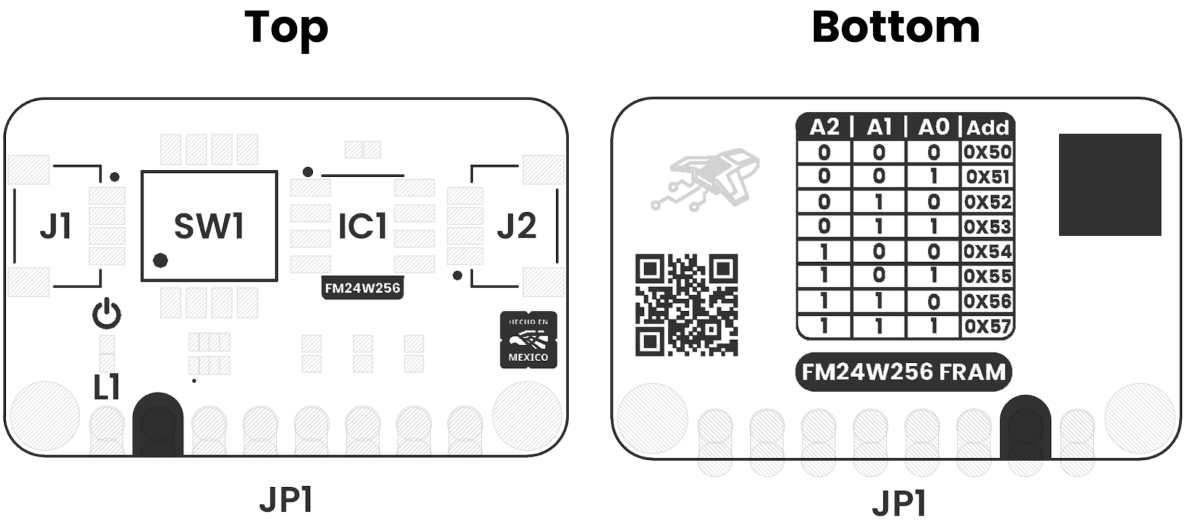

Views of Board Topology

Views of Module Topology

Table 3.2.1 - Components Overview

Ref.	Description
IC1	FM24W256 FRAM
L1	Power On LED
JP1	2.54 mm Castellated Holes
SW1	Dip Switch for Configuration
J1	QWIIC Connector (JST 1 mm pitch) for I2C
J2	QWIIC Connector (JST 1 mm pitch) for I2C

4 Connectors & Pinouts

4.1 General Pinout

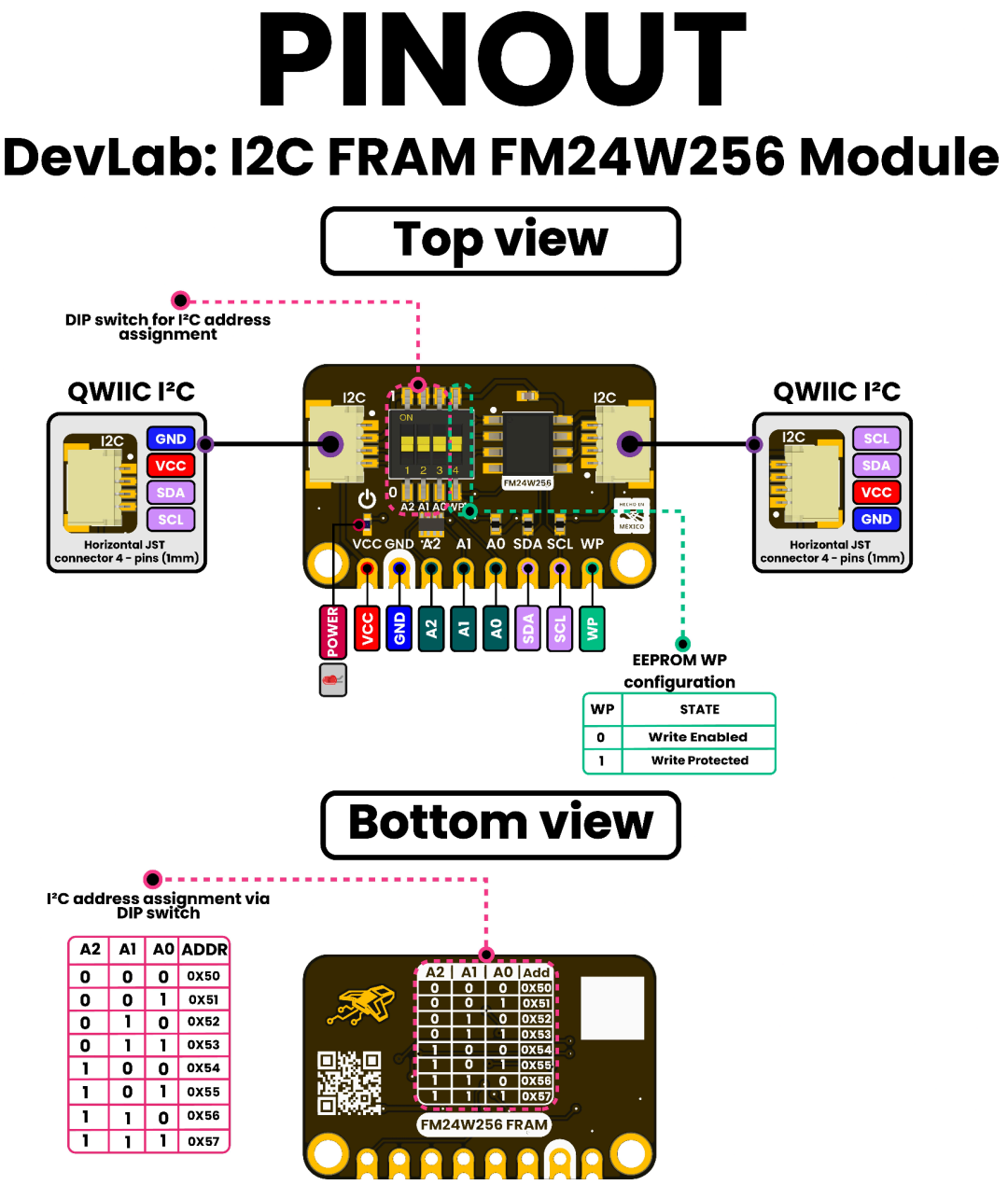

General Pinout

4.2 Pinout General Description

Pin Label	Function	Notes
VCC	2.7 V – 5.5 V	Provides power to the module.
GND	0 V	Common reference for power and signals.
SDA	2.7 V to VCC	Serial data line for I²C communications.
SCL	2.7 V to VCC	Serial clock line for I²C communications.
VCC	2.7 V – 5.5 V	Provides power to the module.

5 Board Operations

5.1 Getting Started with Arduino IDE

The FM24W256 FRAM module is connected to the PULSAR C6 through the I²C interface

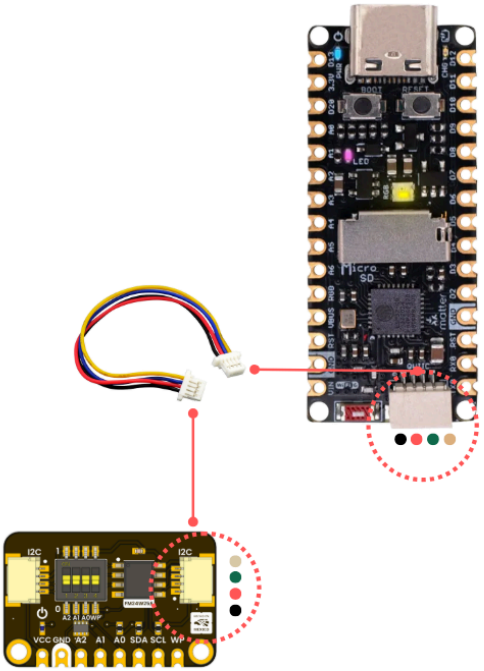

FRAM Pin	PULSAR C6 Pin
VDD	3.3V
GND	GND
SDA	GPIO6
SCL	GPIO7

The WP pin must be connected to **GND** to enable write operations.

Board Selection

- **Board:** ESP32C6 Dev Module (PULSAR C6 compatible)
- **Port:** Corresponding USB serial port

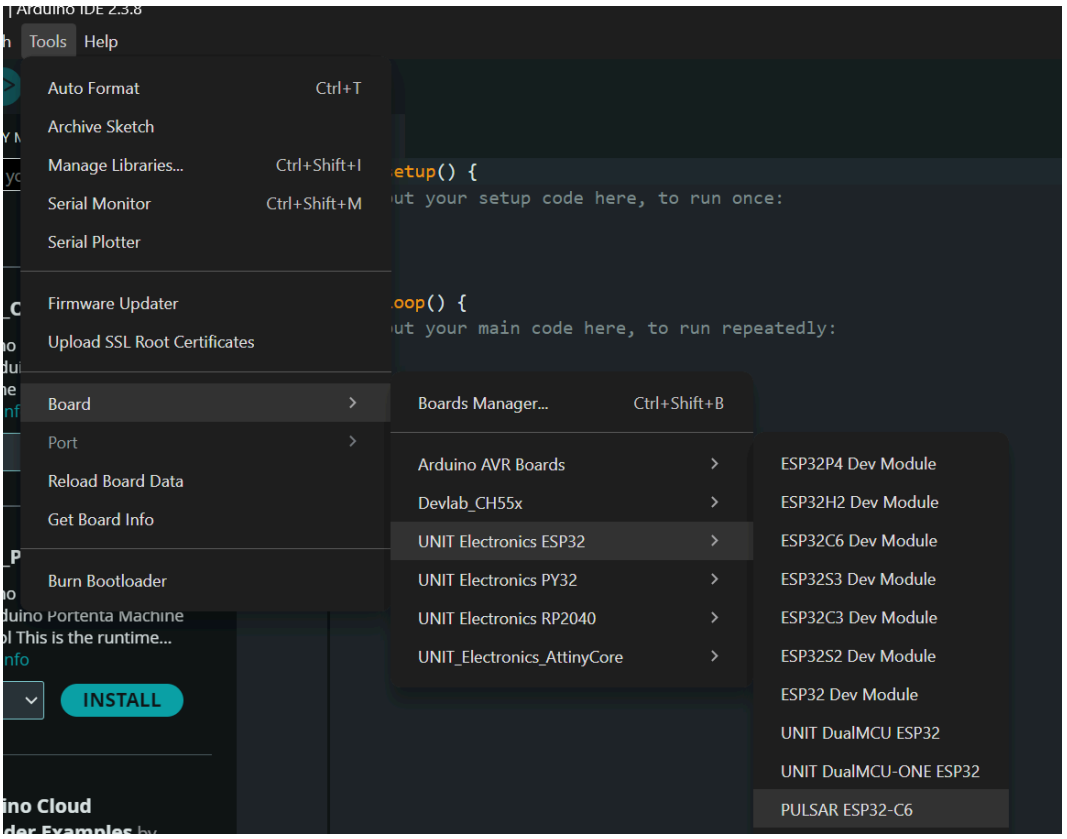

USB CDC Configuration

For ESP32-C6-based boards (including PULSAR C6), USB CDC must be enabled to allow serial communication over USB for debugging and data output.

Ensure the following configuration is set in the Arduino IDE:

- **USB CDC On Boot:** Enabled

This option allows the device to expose a USB serial interface immediately after boot, enabling proper communication with the serial monitor.

Operation Code

```
#include <Wire.h>

// I2C configuration
#define SDA_PIN 6
#define SCL_PIN 7

#define FRAM_BASE 0x50
uint8_t framAddr = FRAM_BASE;
```

```
// Write function
bool framWrite(uint16_t addr, const uint8_t *data, size_t len) {
Wire.beginTransmission(framAddr);
Wire.write(addr >> 8);
Wire.write(addr & 0xFF);
Wire.write(data, len);
return (Wire.endTransmission() == 0);
}

// Read function
bool framRead(uint16_t addr, uint8_t *buf, size_t len) {
Wire.beginTransmission(framAddr);
Wire.write(addr >> 8);
Wire.write(addr & 0xFF);
if (Wire.endTransmission(false) != 0) return false;

if (Wire.requestFrom((int)framAddr, (int)len) != (int)len) return
false;

for (size_t i = 0; i < len; i++) {
  buf[i] = Wire.read();
}
return true;
}

// I2C scan
void i2cScan() {
Serial.println("\nI2C scan:");
for (uint8_t addr = 1; addr < 127; addr++) {
  Wire.beginTransmission(addr);
  if (Wire.endTransmission() == 0) {
    Serial.printf("Device found at 0x%02X\n", addr);
    if (addr >= 0x50 && addr <= 0x57) {
      framAddr = addr;
    }
  }
}
}

void setup() {
Serial.begin(115200);
```

```
#if defined(ESP8266) || defined(ESP32)
Wire.begin(SDA_PIN, SCL_PIN);
#else
Wire.begin();
#endif

Wire.setClock(100000);

i2cScan();

const char* data = "Hola FRAM";
uint16_t addr = 0x0010;

framWrite(addr, (const uint8_t*)data, strlen(data));

uint8_t buffer[32] = {0};
framRead(addr, buffer, strlen(data));

Serial.print("Read: ");
Serial.println((char*)buffer);
}

void loop() {}
```

Code Operation

The firmware performs a complete FRAM transaction sequence:

I²C Initialization

The controller configures the I²C bus using GPIO6 (SDA) and GPIO7 (SCL) at 100 kHz.

Device Detection

An I²C scan is performed to detect devices on the bus.
If a device is found in the range 0x50–0x57, it is selected as the FRAM address.

Write Operation

- A START condition is generated
- The device address (write mode) is transmitted

- A 16-bit memory address is sent
- A data block is written
- A STOP condition completes the transaction

The FM24W256 writes data immediately at bus speed without internal delay.

Read Operation (Random Read)

- A dummy write loads the memory address
- A repeated START condition is issued
- The device is addressed in read mode
- The stored data is returned over SDA

Expected Results

After execution, the serial monitor displays the stored string read from memory.

- Matching data indicates correct operation
- Incorrect data indicates addressing or communication issues
- No output indicates I²C communication failure

Functional Notes

- Addressing: 16-bit (MSB + LSB)
- Memory size: 32 KB
- Write delay: Not required
- Acknowledge polling: Not required
- Sequential access: Supported
- I²C address range: 0x50 – 0x57 (A0–A2 configurable)

6 Mechanical Information

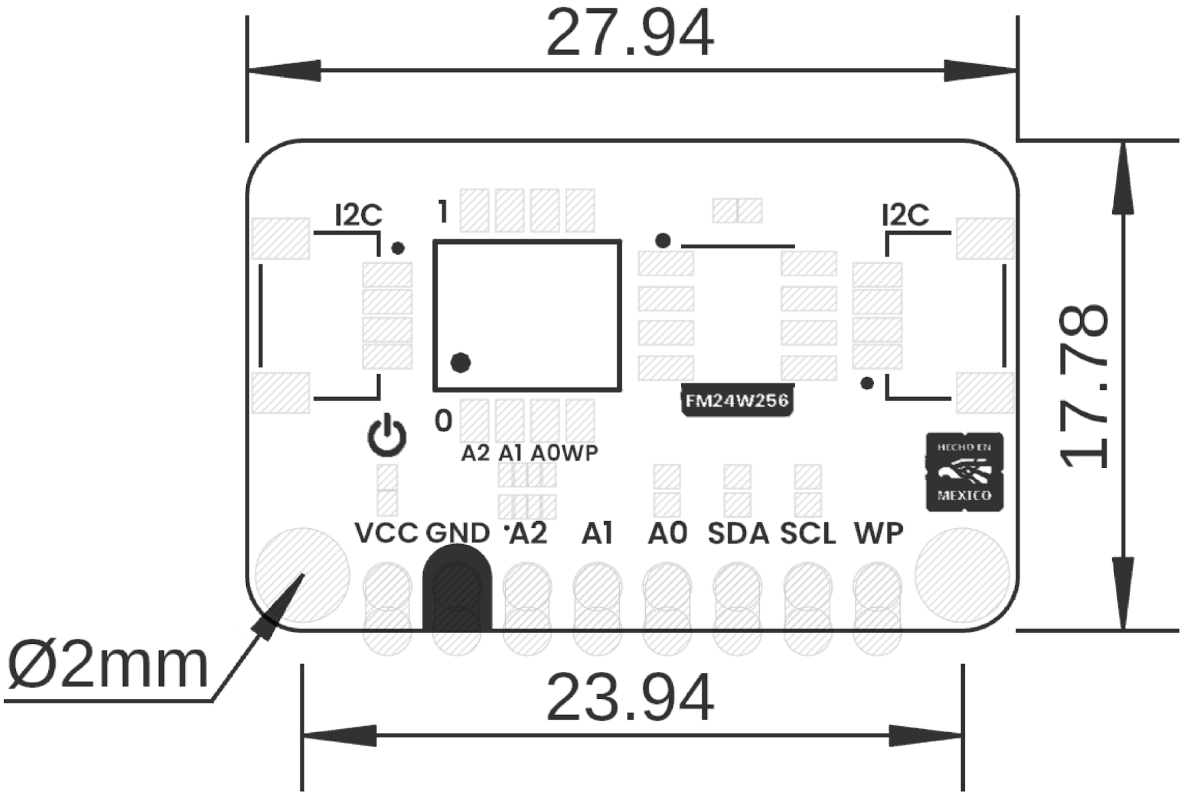

Board Dimensions in Millimeters

Mechanical dimensions in millimeters

7 Company Information

Company name	UNIT Electronics
Company website	https://uelectronics.com/
Company Address	Salvador 19, Cuauhtémoc, 06000 Mexico City, CDMX

8 Reference Documentation

Ref	**Link**
Documentation	https://wiki.uelectronics.com/wiki/unit_devlab_i2c_fram_fm24w256_module
GIthub	https://github.com/UNIT-Electronics-MX/unit_devlab_i2c_fram_fm24w256_module
Thonny IDE	https://thonny.org/
Arduino IDE	https://www.arduino.cc/en/software
Visual Studio Code	https://code.visualstudio.com/download

9 Appendix

9.1 Schematic

(*https://github.com/UNIT-Electronics-MX/unit_devlab_i2c_fram_fm24w256_module/blob/main/hardware/unit_sch_v_1_0_0_ue0111_fm24w256_fram_module.pdf*)

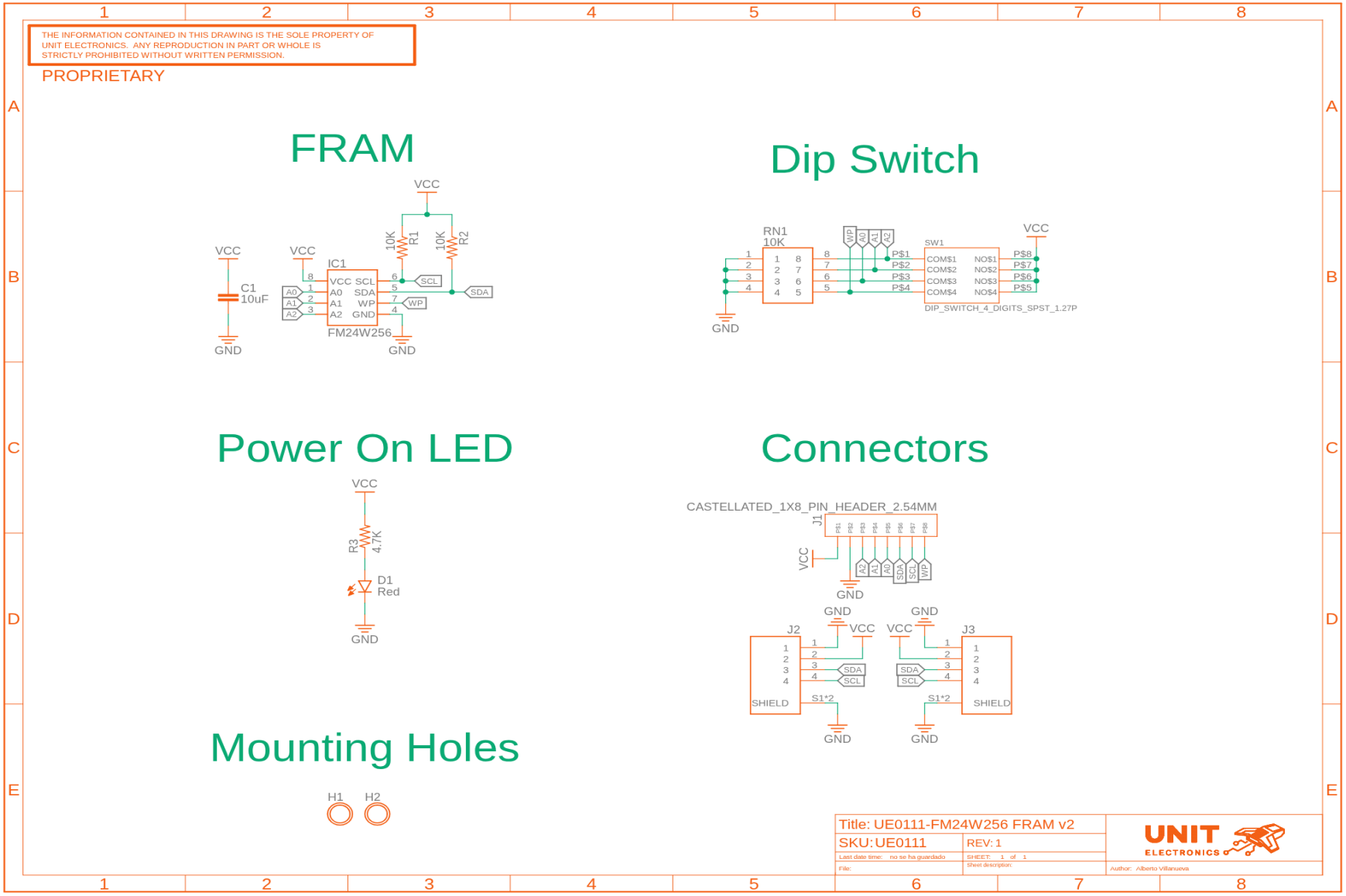
THE INFORMATION CONTAINED IN THIS DRAWING IS THE SOLE PROPERTY OF UNIT ELECTRONICS. ANY REPRODUCTION IN PART OR WHOLE IS STRICTLY PROHIBITED WITHOUT WRITTEN PERMISSION.
PROPRIETARY
FRAM
VCC
C1
10uF
GND
IC1
FM24W256
VCC SCL
A0 SDA
A1 WP
A2 GND
10K R1
10K R2
SCL
SDA
WP
Dip Switch
RN1
10K
SW1
DIP_SWITCH_4_DIGITS_SPST_1.27P
Power On LED
R3
4.7K
D1
Red
Connectors
CASTELLATED_1X8_PIN_HEADER_2.54MM
J1
J2
J3
SHIELD
S1*2
Mounting Holes
H1
H2
Title: UE0111-FM24W256 FRAM v2
SKU: UE0111
REV: 1
Author: Alberto Villanueva