PINOUT

DevLab: I2C FT24C32A EEPROM Module

Top view

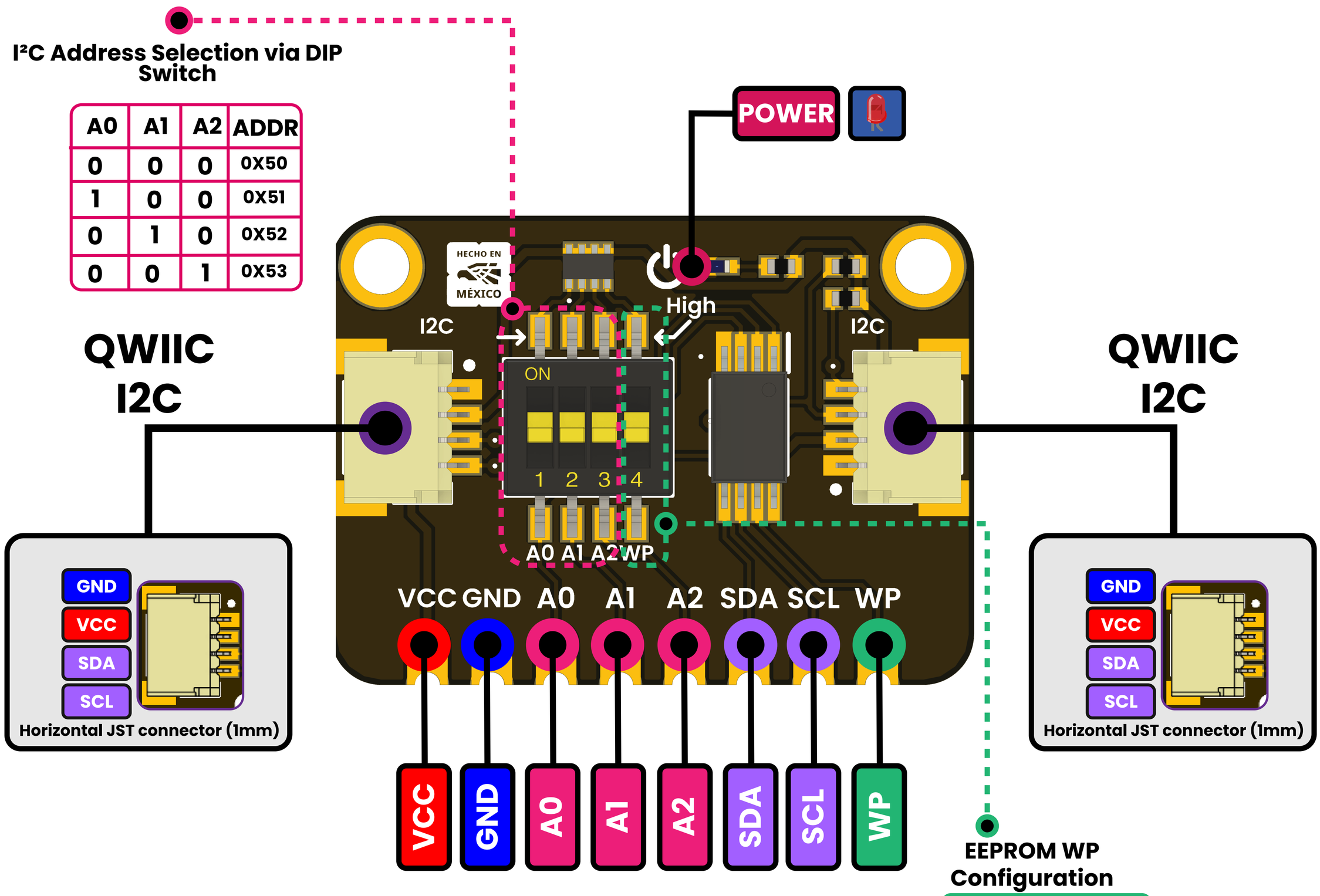

I²C Address Selection via DIP Switch

A0	A1	A2	ADDR
0	0	0	0X50
1	0	0	0X51
0	1	0	0X52
0	0	1	0X53

EEPROM WP Configuration

WP	STATE
0	Write Enable
1	Write Protect