I2C FT24C32A EEPROM Module

DEVLAB FACTOR

Mfr. Part #: UE0110

Product Reference Manual (V1.0)

Description

The **DevLab I2C FT24C32A EEPROM Module** is a compact non-volatile memory board built around the **FT24C32A** chip, offering **32 Kbits (4 KB)** of storage organized as **4096 × 8 bits**. It operates through a **standard two-wire I²C interface.** The device supports both **byte** and **page write modes** (up to 32 bytes per page), allowing partial page updates without a full erase cycle. Its **self-timed write cycle** (maximum 5 ms) and **automatic erase-before-write** mechanism simplify software implementation.

The FT24C32A EEPROM delivers outstanding endurance and reliability, supporting **1,000,000 write/erase cycles per cell** and ensuring **100 years of data retention** under normal conditions. It can communicate at speeds of up to **1 MHz** (2.5–5 V) or **400 kHz** (1.8 V), fully compliant with standard and fast-mode I²C protocols. The module operates reliably across the **industrial temperature range of –40 °C to +85 °C**, making it suitable for demanding applications such as configuration storage, calibration constants, device identifiers, sensor offsets, or system logs. Its compact form factor and clearly labeled I²C header simplify integration in both prototypes and production systems requiring permanent, low-power data storage.

DevLab format compatibility.

Simplicity and compatibility are the core principles of the **DevLab form factor**. This standard defines a **compact and communication-optimized board layout**, ensuring straightforward connection and interoperability among DevLab modules.

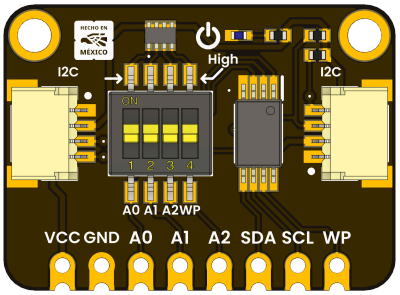

Key Features

- **Memory Capacity:** 32 Kbits (4 KB), organized as 4096 × 8 bits
- **Interface:** Standard 2-wire I²C, supporting up to 1 MHz communication speed
- **Operating Voltage:** Wide range from 1.8 V to 5.5 V
- **Write Modes:** Byte and 32-byte page write with partial page support
- **Write Cycle Time:** Self-timed, maximum 5 ms per cycle
- **Low Power Consumption:** Standby current < 1 µA (typ. 0.02 µA @ 1.8 V)
- **Hardware Protection:** Dedicated WP pin prevents accidental writes
- **Signal Integrity:** Schmitt-trigger inputs with internal noise filtering
- **Reliability:** 1,000,000 write/erase cycles and 100-year data retention
- **Temperature Range:** –40 °C to +85 °C (industrial grade)
- **Compatibility:** Works with ESP32, Arduino, STM32, RP2040, and most I²C controllers

Software Support

- **Arduino IDE**
- **Micro Python**

Applications

- **Configuration Storage:** Retain system settings, user preferences, and initialization parameters across power cycles.
- **Sensor Calibration:** Store offset, gain, and correction data for precision measurement systems.
- **Device Identification:** Save unique serial numbers, MAC addresses, or product configuration data.
- **Data Logging:** Record operational history, error codes, or event timestamps in embedded systems.
- **Portable Instruments:** Maintain measurement data or calibration values in handheld or battery-powered devices.
- **Industrial and Automotive Systems:** Provide stable memory for control parameters under wide temperature ranges.
- **IoT and Smart Devices:** Preserve local device states or network credentials when disconnected from power.

CONTENTS

Description..... 1
DevLab format compatibility..... 1
Key Features..... 1
Software Support..... 2
Applications..... 2
1. The Board..... 4
1.1 Accessories..... 4
2 Ratings..... 4
2.1 Recommended Operating Conditions..... 4
3. Functional Overview..... 5
3.2 Board Topology..... 8
4 Connectors & Pinouts..... 9
4.1 General Pinout..... 9
4.2 Pinout General Description..... 10
5 Board Operation..... 11
Board Selection..... 11
Operation Code..... 12
Code Operation..... 13
Expected Results..... 14
Interpretation..... 14
Functional Notes..... 14
6 Mechanical Information..... 15
7 Company Information..... 16
8 Reference Documentation..... 16

1. The Board

1.1 Accessories

2 Ratings

2.1 Recommended Operating Conditions

Parameter	Description	Min	Typ	Max	Unit
Vdd	Input voltage to power on the module	1.8	-	5.5	V
Icc	Supply read current	-	0.4	1.0	mA
Icc	Supply write current	-	2	3.0	mA
Isb1	Supply current	0.02	-	1	uA
Iil	Input Leakage Current	-	-	3.0	uA
Ilo	Output Leakage Current	-	-	3.0	uA
Vih	Input High voltage	0.7xVdd	-	Vdd+0.5	V
Vil	Input Low voltage	-0.6	-	0.3xVdd	V
Vol	Output Low voltage for Vdd=3.0V	-	-	0.4V	V
NVc	Endurance	-	-	1,000,000	Write Cycle

3. Functional Overview

The FT24C32A is a non-volatile serial EEPROM device organized as 4,096 words of 8 bits (32 kbit total). Communication with the device is performed through a standard two-wire serial interface (I²C), using the SDA (data) and SCL (clock) signals. The device operates over a supply voltage range of 1.8 V to 5.5 V and supports clock frequencies up to 1 MHz depending on the operating voltage.

The internal architecture consists of an EEPROM array, address counter, page buffer (latch), row and column decoders, and control logic for serial communication and write-cycle timing. Write operations are internally timed and require no external timing control beyond bus protocol compliance.

Pin Description and Hardware Interface

The device includes address selection inputs (A0, A1, A2), which define the hardware-configurable portion of the I²C slave address. The SDA pin is a bidirectional open-drain line and requires an external pull-up resistor. The SCL pin is used to synchronize data transfer. The WP (Write Protect) pin enables hardware-level protection of the entire memory array; when driven to logic high, write operations are disabled, while read operations remain unaffected.

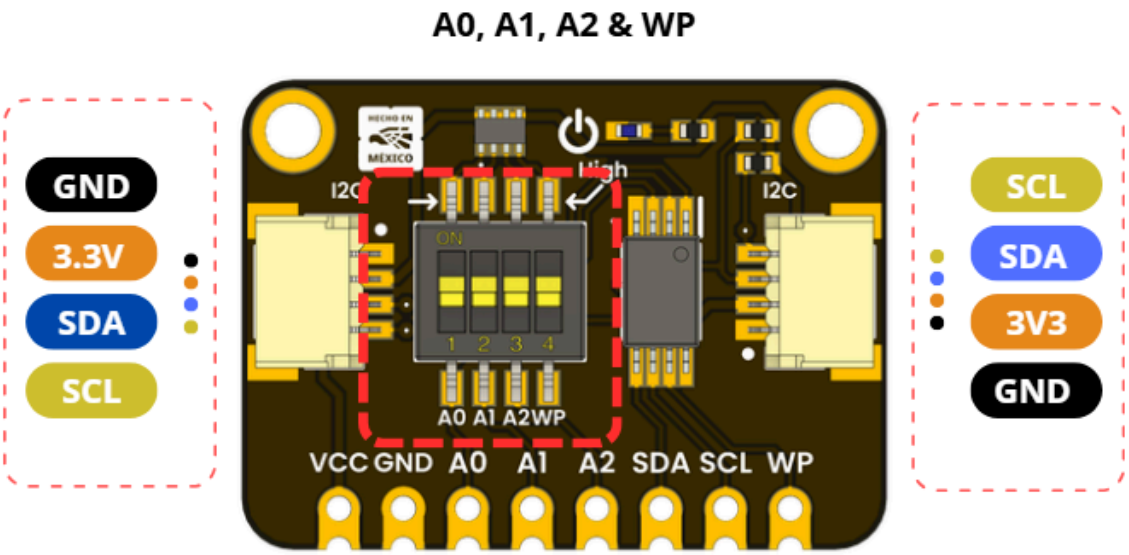

Device Addressing and Communication Protocol

The FT24C32A follows the standard I²C addressing scheme. After a START condition, the master transmits an 8-bit device address word. The first four bits are fixed (1010), followed by three bits corresponding to the hardware address pins (A2, A1, A0). The least significant bit defines the operation mode, where 0 indicates a write operation and 1 indicates a read operation.

All communication is structured in 8-bit data frames followed by an acknowledge (ACK) bit generated by the receiver. A valid transaction begins with a START condition and ends with a STOP condition. Data transitions on the SDA line are only allowed when SCL is low; transitions while SCL is high are interpreted as control conditions (START or STOP).

Memory Organization

The memory array is organized into 4,096 bytes, addressed using a 12-bit address space. Addressing requires two bytes: a most significant byte (MSB) and a least significant byte (LSB). The memory is divided into 128 pages, each containing 32 bytes.

During page write operations, the lower five bits of the address are internally incremented to allow sequential data loading within the same page. If more than 32 bytes are written in a single page operation, the address counter wraps around and overwrites previously written data within that page.

Write Operations

A write operation begins with a START condition followed by the device address with the write bit set. The master then transmits the two-byte memory address (MSB followed by LSB), after which one or more data bytes are sent.

In byte write mode, a single data byte is written to the specified address. In page write mode, a maximum of 32 bytes can be written sequentially before a STOP condition is issued. Upon receiving the STOP condition, the device initiates an internal write cycle, which typically takes up to 5 ms. During this time, the device does not respond to further commands.

To determine when the write cycle has completed, acknowledge polling can be used. The master repeatedly sends the device address until the EEPROM responds with an ACK, indicating readiness for the next operation.

Read Operations

The device supports three types of read operations: current address read, random read, and sequential read.

In the current address read, the EEPROM outputs data from the current internal address pointer, which is automatically incremented after each read operation.

Random read is a two-step process. First, the master performs a dummy write to load the desired address into the internal address register. Then, a repeated START condition is issued, followed by the device address with the read bit set, allowing data retrieval from the specified location.

Sequential read allows for continuous reading of multiple bytes. After each byte is read, the internal address counter increments automatically. The master must acknowledge each byte except the last one, after which a STOP condition is issued.

Electrical and Timing Characteristics

The device supports standard and fast I²C modes, with clock frequencies up to 400 kHz at low voltage and up to 1 MHz at higher supply levels. The internal write cycle time is specified as a maximum of 5 ms. Data retention is typically 100 years, and endurance is rated at approximately 1,000,000 write cycles.

The device includes noise filtering on inputs and Schmitt trigger characteristics to improve signal reliability in electrically noisy environments.

Basic Configuration and Integration Considerations

Proper operation requires correct hardware configuration of the address pins (A0–A2) and appropriate pull-up resistors on the SDA and SCL lines. The WP pin should be tied according to the desired write protection scheme. The I²C master must handle write-cycle delays either through fixed delays or acknowledge polling.

Care must be taken when performing page writes to ensure that data does not cross page boundaries unintentionally. Additionally, bus timing parameters must comply with the device specifications to ensure reliable communication.

3.2 Board Topology

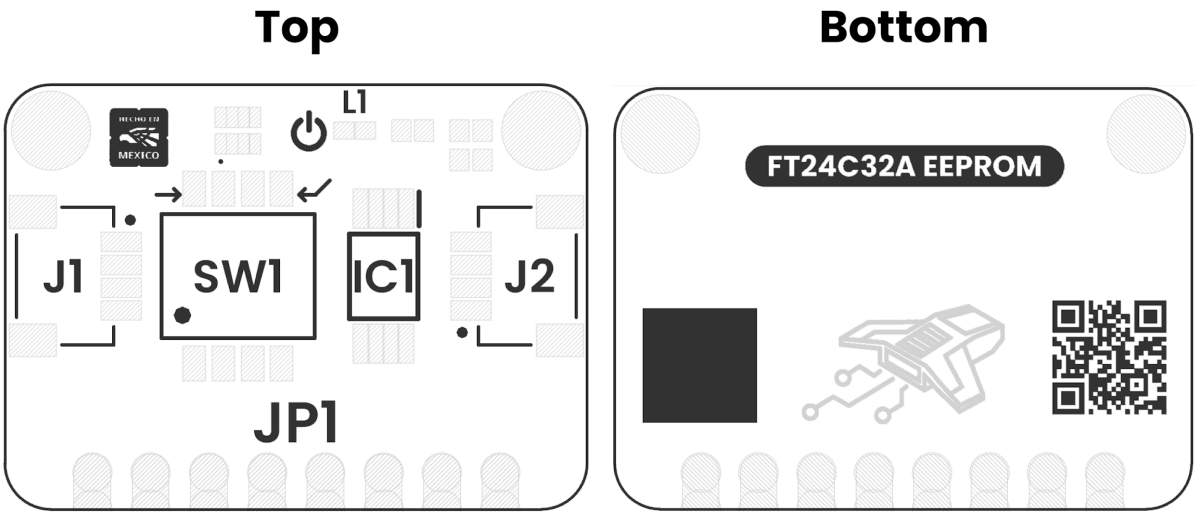

Views of Board Topology

Views of DRV2605L Haptic Motor Controller Module Topology

Table 3.2.1 - Components Overview

Ref.	Description
IC1	FT24C32A EEPROM
L1	Power On LED
SW1	Dip Switch for Configuration
JP1	2.54 mm Castellated Holes
J1	QWIIC Connector (JST 1 mm pitch) for I2C
J2	QWIIC Connector (JST 1 mm pitch) for I2C

4 Connectors & Pinouts

4.1 General Pinout

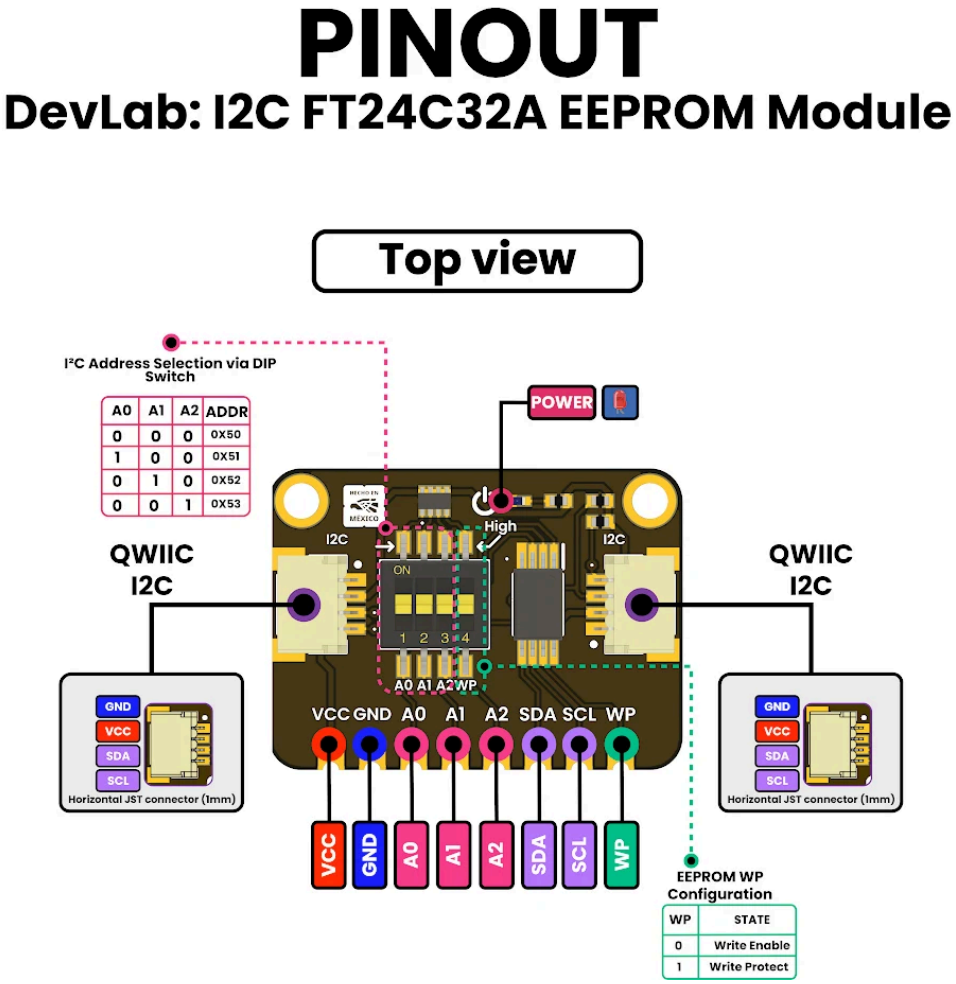

General Pinout

4.2 Pinout General Description

Pin Label	Function	Notes
+3V3	Power Supply	3.3V regulated supply
GND	Ground	Common ground reference
SCL	I2C Clock Line	Serial clock for I2C communication
SDA	I2C Data Line	Serial data for I2C communication
A0	I2C Address Select	Used to configure device address
A1	I2C Address Select	Used to configure device address
A2	I2C Address Select	Used to configure device address
WP	Write-Protect	High = write disabled

5 Board Operation

5.1 Getting Started with arduino IDE

The FT24C32A EEPROM module is connected to the PULSAR C6 through the I²C interface.

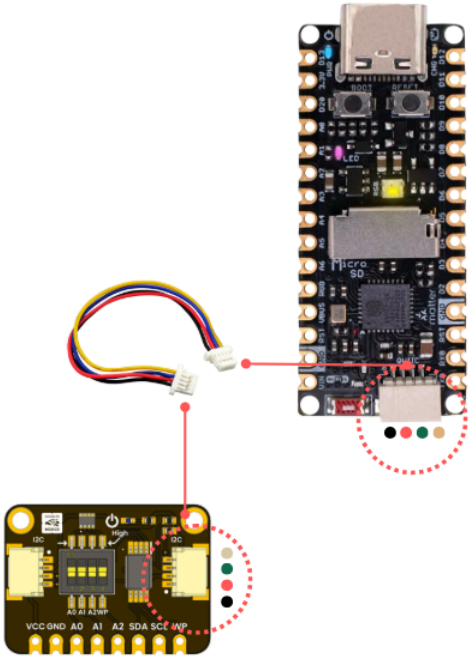

EEPROM Pin	PULSAR C6 Pin
+3V3	3.3V
GND	GND
SDA	GPIO6
SCL	GPIO7

Set WP to write enable by connecting the WP pin to GND using the header or the DIP switch.

Board Selection

- Board: **ESP32C6 Dev Module** (PULSAR C6 compatible)
- Port: Corresponding USB serial port

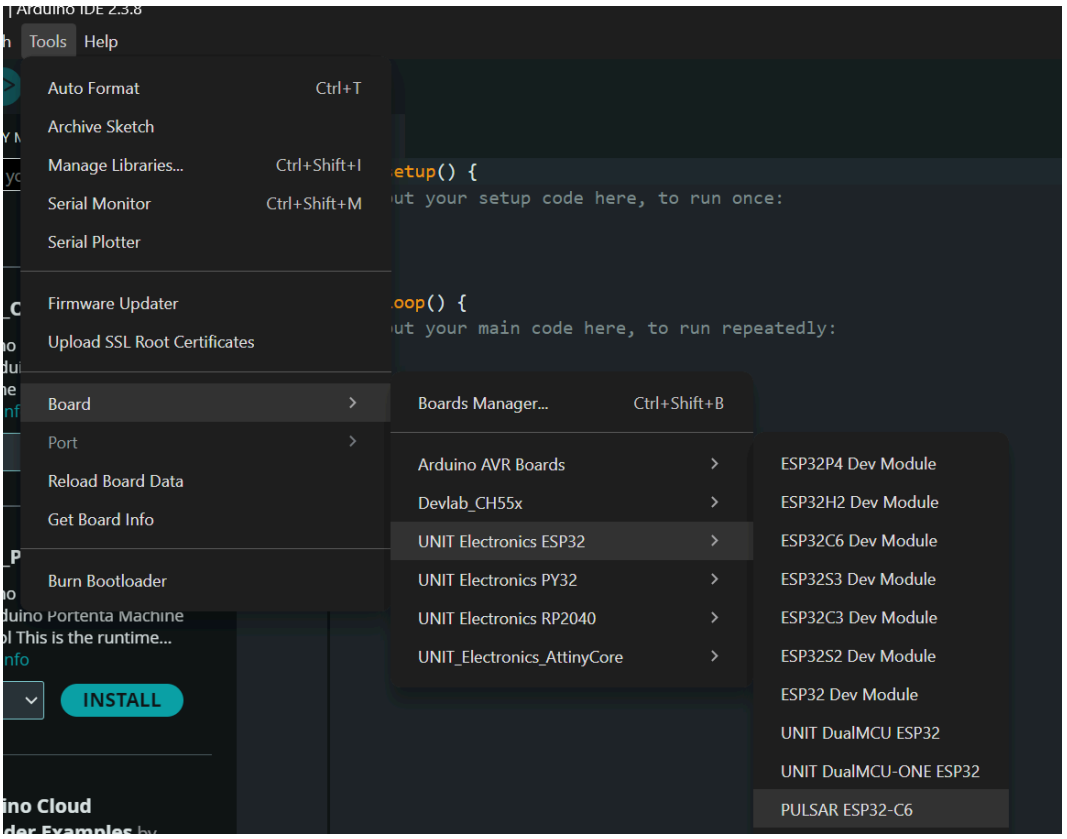

Operation Code

```
#include <Wire.h>

// ===== CONFIGURA TUS PINES I2C =====
#define SDA_PIN 6
#define SCL_PIN 7
// ==================================

#define EEPROM_BASE 0x50
uint8_t eepromAddr = EEPROM_BASE;

// ---------- Funciones básicas ----------
void eepromWaitReady(uint32_t timeout = 25) {
 uint32_t t0 = millis();
 while (millis() - t0 < timeout) {
   Wire.beginTransmission(eepromAddr);
   if (Wire.endTransmission() == 0) return;
   delay(1);
 }
}
```

```
bool eepromWrite(uint16_t addr, const uint8_t *data, size_t len) {
 Wire.beginTransmission(eepromAddr);
 Wire.write(addr >> 8);
 Wire.write(addr & 0xFF);
 Wire.write(data, len);
 if (Wire.endTransmission() != 0) return false;
 eepromWaitReady();
 return true;
}

bool eepromRead(uint16_t addr, uint8_t *buf, size_t len) {
 Wire.beginTransmission(eepromAddr);
 Wire.write(addr >> 8);
 Wire.write(addr & 0xFF);
 if (Wire.endTransmission(false) != 0) return false;
  if (Wire.requestFrom((int)eepromAddr, (int)len) != (int)len) return
false;
 for (size_t i = 0; i < len; i++) {
   buf[i] = Wire.read();
 }
 return true;
}

void i2cScan() {
 Serial.println("\n=== Escaneando bus I2C ===");
 bool found = false;
 for (uint8_t addr = 1; addr < 127; addr++) {
   Wire.beginTransmission(addr);
   if (Wire.endTransmission() == 0) {
     Serial.printf("Dispositivo encontrado: 0x%02X", addr);
     if (addr >= 0x50 && addr <= 0x57) {
       Serial.print(" <- EEPROM");
       eepromAddr = addr;
       found = true;
     }
     Serial.println();
   }
   delay(2);
 }
 if (!found) Serial.println("¡EEPROM no detectada!");
 Serial.println();
}
```

```
void setup() {
 Serial.begin(115200);
 delay(200);
  Serial.println("\n*** DEMO EEPROM FT24C32A ***\n");
  // Inicializar I2C
#if defined(ESP8266) || defined(ESP32)
 Wire.begin(SDA_PIN, SCL_PIN);
#else
 Wire.begin();
#endif
 Wire.setClock(100000);
  // 1. SCAN del bus I2C
 i2cScan();
  // 2. ESCRIBIR datos
 Serial.println("=== Escribiendo en EEPROM ===");
 const char* testData = "Hola EEPROM!";
 uint16_t writeAddr = 0x0010;
  if (eepromWrite(writeAddr, (const uint8_t*)testData,
strlen(testData))) {
   Serial.printf("✓ Escrito en 0x%04X: \"%s\"\n\n", writeAddr,
testData);
 } else {
   Serial.println("✗ Error al escribir\n");
 }
  delay(10);
  // 3. LEER datos
 Serial.println("=== Leyendo de EEPROM ===");
 uint8_t readBuf[32] = {0};
  if (eepromRead(writeAddr, readBuf, strlen(testData))) {
   Serial.printf("✓ Leído de 0x%04X: \"", writeAddr);
   for (size_t i = 0; i < strlen(testData); i++) {
     Serial.print((char)readBuf[i]);
   }
   Serial.println("\"");

   // Mostrar en HEX
   Serial.print("  HEX: ");
   for (size_t i = 0; i < strlen(testData); i++) {
     Serial.printf("%02X ", readBuf[i]);
   }
   Serial.println("\n");
```

```
 } else {
   Serial.println("✗ Error al leer\n");
 }
  // Verificación
 if (memcmp(testData, readBuf, strlen(testData)) == 0) {
   Serial.println("✓ DEMO EXITOSO: Datos escritos y leídos
correctamente!");
 } else {
   Serial.println("✗ ERROR: Los datos no coinciden");
 }
}

void loop() {
 // Demo completo, nada más que hacer
}
```

Code Operation

The firmware performs a complete EEPROM transaction sequence:

I²C Initialization

The controller configures the I²C bus using GPIO6 (SDA) and GPIO7 (SCL) at 100 kHz.

Device Detection

An I²C scan is performed to detect devices on the bus.
If a device is found in the range 0x50–0x57, it is selected as the EEPROM address.

Write Operation

- A START condition is generated
- The device address (0x50, write mode) is transmitted
- A 16-bit memory address is sent (0x0010)
- A data block ("Hola EEPROM!") is written
- A STOP condition triggers the internal write cycle

Internal Write Cycle

The EEPROM performs a self-timed write (~5 ms), during which it does not respond to I²C commands.
The firmware waits until the device becomes ready using ACK polling.

Read Operation (Random Read)

- A dummy write loads the memory address (0x0010)
- A repeated START is issued
- The device is addressed in read mode
- The stored data is returned over SDA

Expected Results

After execution, the Serial Monitor outputs the following:

- **TEST SUCCESS** Interpretation
- **TEST SUCCESS** Successful write and read operation. Communication and memory access are correct.
- **TEST FAIL** Indicates write failure, incorrect addressing, or WP pin enabled.

No output / no data available

Indicates I²C communication failure (wiring, address, or bus configuration).

Functional Notes

- The device uses 16-bit addressing (MSB + LSB)
- Memory size: 4096 bytes (4 KB)
- Page size: 32 bytes
- Maximum write cycle: ~5 ms
- I²C address range: 0x50 – 0x57 (depending on A0–A2 configuration)

6 Mechanical Information

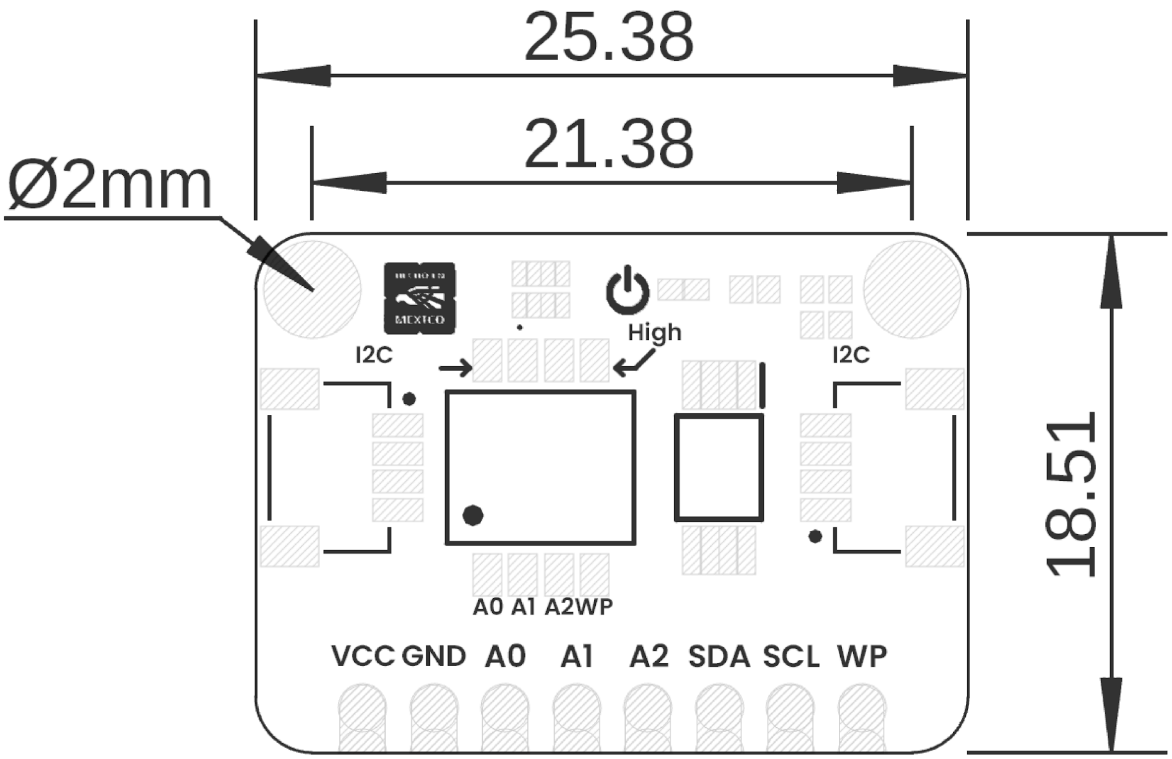

Board Dimensions in Millimeters

Mechanical dimensions in millimeters

7 Company Information

Company name	UNIT Electronics
Company website	https://uelectronics.com/
Company Address	Salvador 19, Cuauhtémoc, 06000 Mexico City, CDMX

8 Reference Documentation

Ref	**Link**
Documentation	https://github.com/UNIT-Electronics-MX/unit_devlab_i2c_ft24c32a_eeprom_module
Getting Started Guide	https://wiki.uelectronics.com/wiki/unit_devlab_i2c_ft24c32a_eeprom_module
Thonny IDE	https://thonny.org/
Arduino IDE	https://www.arduino.cc/en/software
Visual Studio Code	https://code.visualstudio.com/download

9 Appendix

9.1 Schematic

(https://github.com/UNIT-Electronics-MX/unit_devlab_i2c_ft24c32a_eeprom_module/blob/main/hardware/unit_sch_v_1_0_0_ue0110_ft24c32a_eeprom_module.pdf)

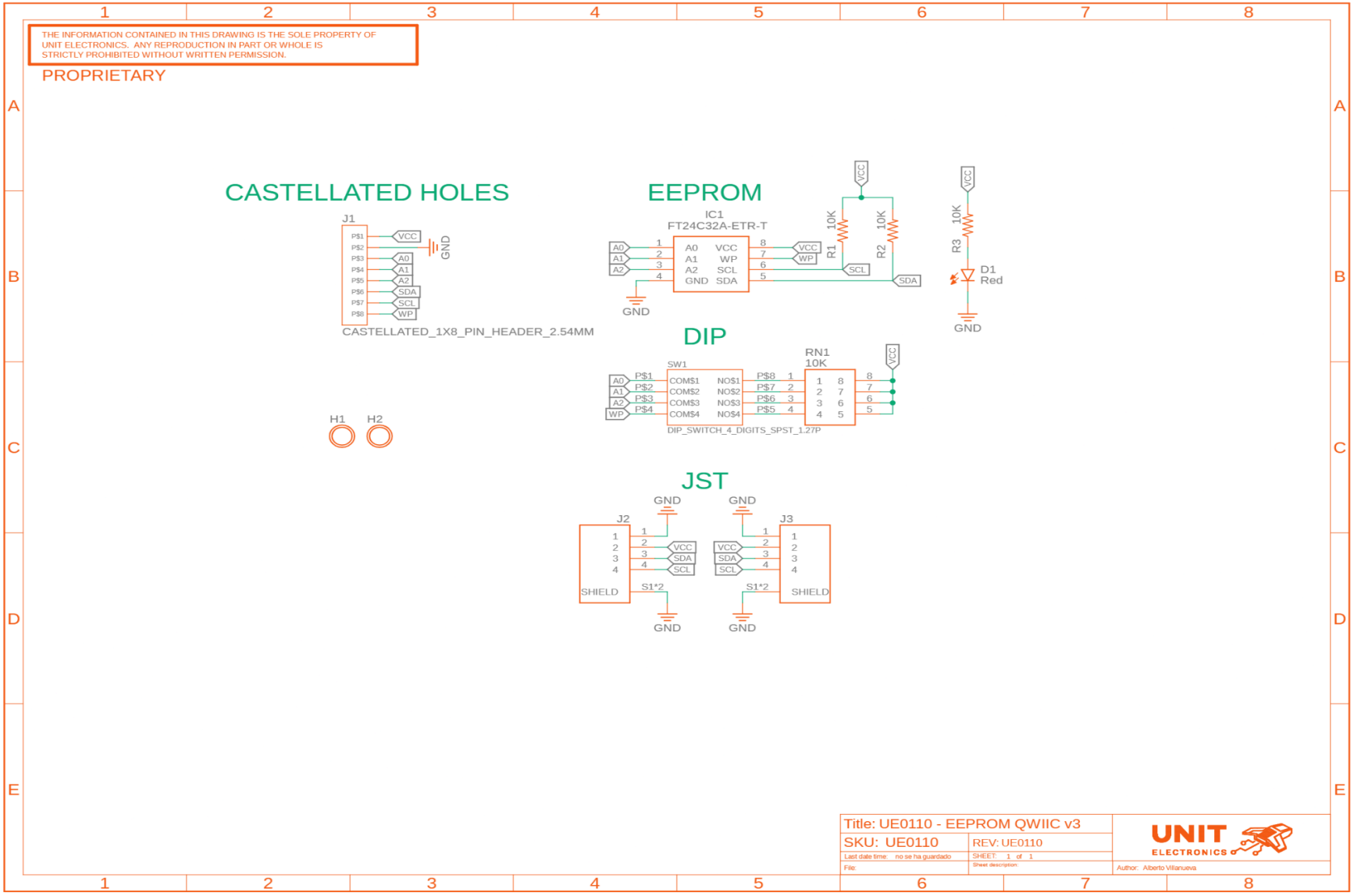
THE INFORMATION CONTAINED IN THIS DRAWING IS THE SOLE PROPERTY OF UNIT ELECTRONICS. ANY REPRODUCTION IN PART OR WHOLE IS STRICTLY PROHIBITED WITHOUT WRITTEN PERMISSION.
PROPRIETARY
CASTELLATED HOLES
J1
CASTELLATED_1X8_PIN_HEADER_2.54MM
EEPROM
IC1
FT24C32A-ETR-T
A0 VCC
A1 WP
A2 SCL
GND SDA
R1 10K
R2 10K
R3 10K
D1 Red
GND
VCC
DIP
SW1
RN1 10K
DIP_SWITCH_4_DIGITS_SPST_1.27P
H1
H2
JST
J2
J3
SHIELD
S1*2
Title: UE0110 - EEPROM QWIIC v3
SKU: UE0110
REV: UE0110
Author: Alberto Villanueva