PINOUT

DevLab: I²C TCA9548A Multiplexer Module

Top view

TCA control and inputs for I²C address assignment via software or DIP switch

A2	A1	A0	Aaddress
0	0	0	0x70
0	0	1	0x71
0	1	0	0x72
0	1	1	0x73
1	0	0	0x74
1	0	1	0x75
1	1	0	0x76
1	1	1	0x77

RST	TCA
0	OFF
1	ON

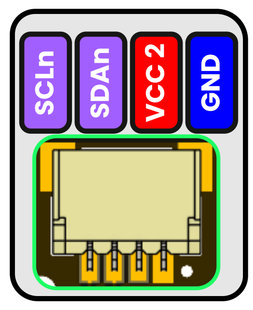

n={4,5,6,7}

Side 2 (top) with JST connectors (1 mm) and 1-to-1 connection headers for TCA9548A channels 4–7

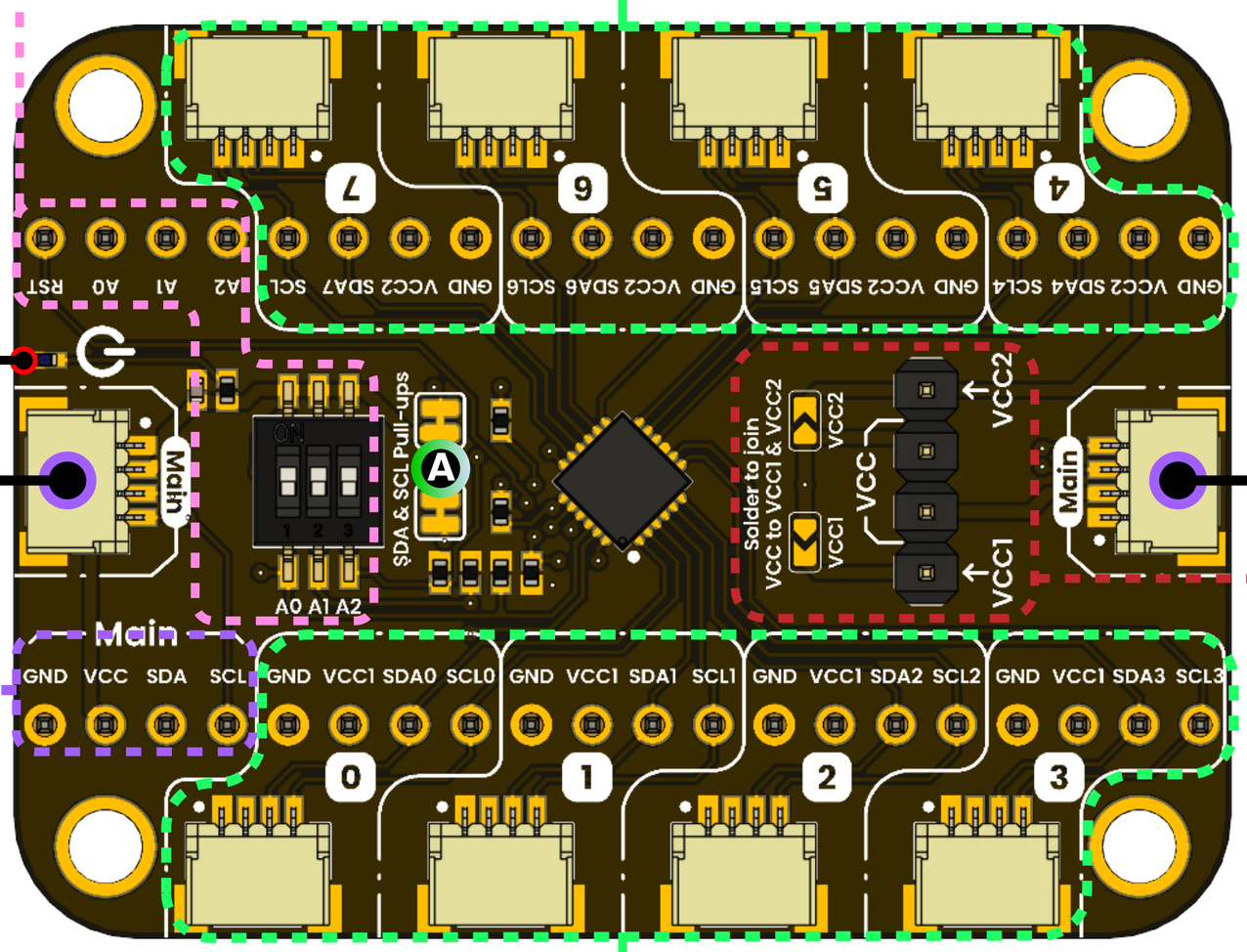

1 to 1 header connection to QWIIC I²C

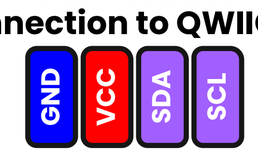

Side 1 (top) with JST connectors (1 mm) and 1-to-1 connection headers for TCA9548A channels 0–3

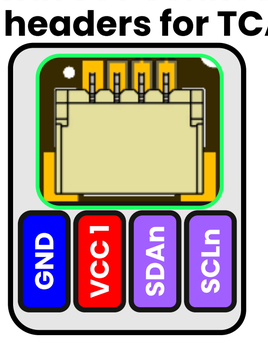

n={0,1,2,3}

VCC SELECTION

Solder/bridge jumper to supply side 1 or side 2

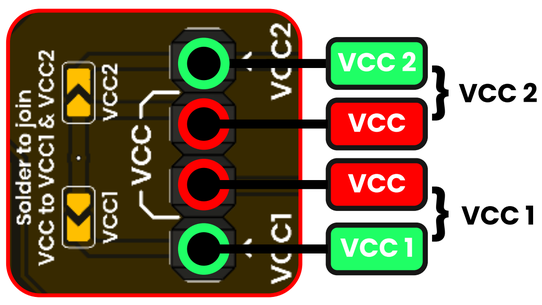

A

Remove solder bridge to disable VCC to I²C pull-ups.

Bottom view

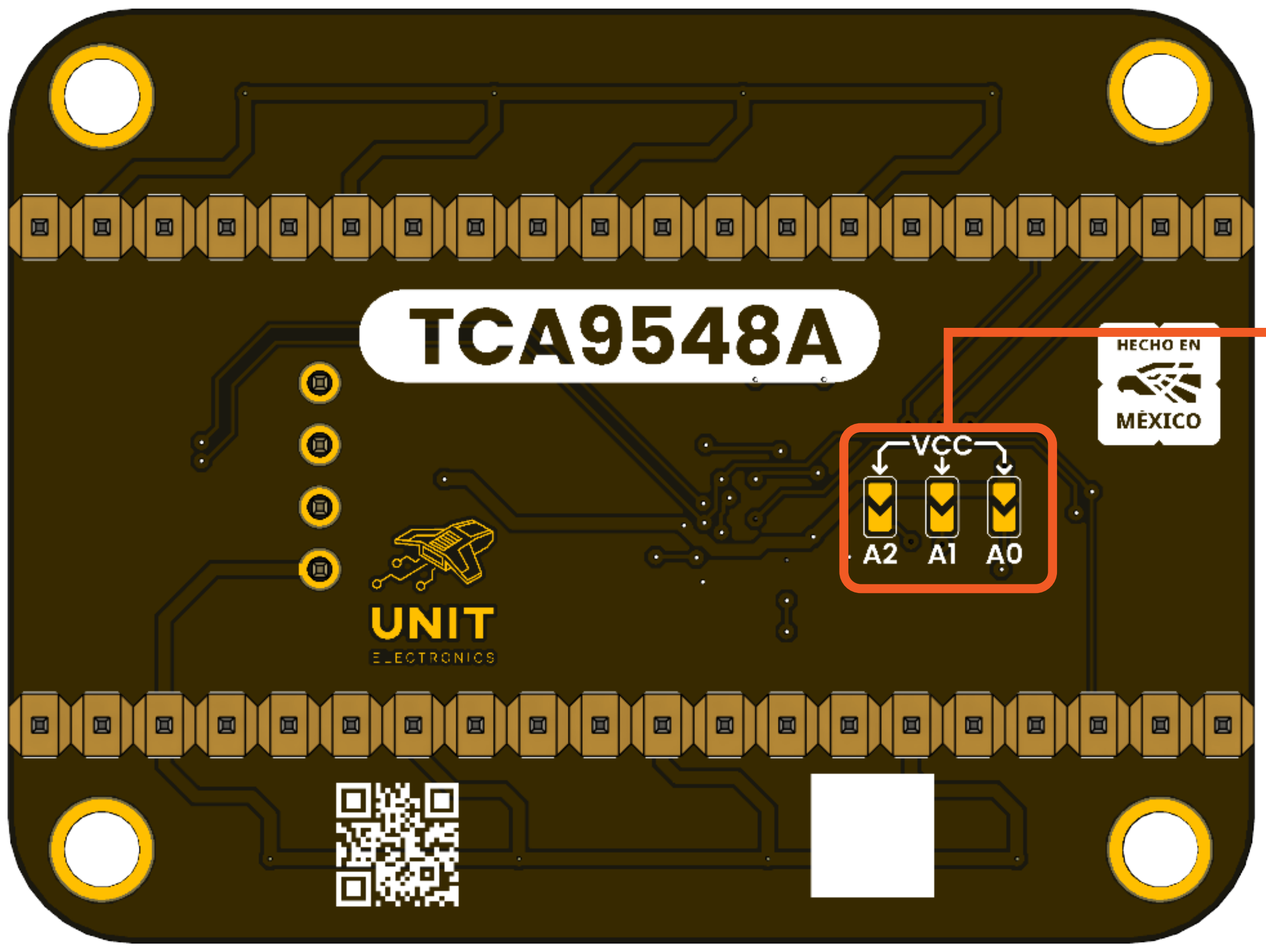

PADS A SOLDAR

Short pads to route pull-down resistors to VCC for I²C address setting

NOTE

Leave jumper pads open if address is set by DIP switch