I2C TCA9548A Multiplexer Module

DEVLAB FACTOR

Mfr. Part #: UE0114

Product Reference Manual (V1.0)

Description

The **DevLab I2C TCA9548A Multiplexer Module** is an I²C-controlled bus switching module based on the **TCA9548A** bidirectional I²C multiplexer. The device provides expansion of a single upstream I²C bus into eight independently selectable downstream channels, enabling communication with multiple I²C devices that share identical slave addresses or require electrical isolation.

Each downstream channel consists of a dedicated SCL/SDA pair and operates as a bidirectional pass-through, allowing seamless integration into existing I²C and SMBus systems. The module supports mixed-voltage environments and is intended for modular prototyping, sensor evaluation, and system-level I²C bus management.

DevLab format compatibility.

Simplicity and compatibility are the core principles of the **DevLab form factor**. This standard defines a **compact and communication-optimized board layout**, ensuring straightforward connection and interoperability among DevLab modules.

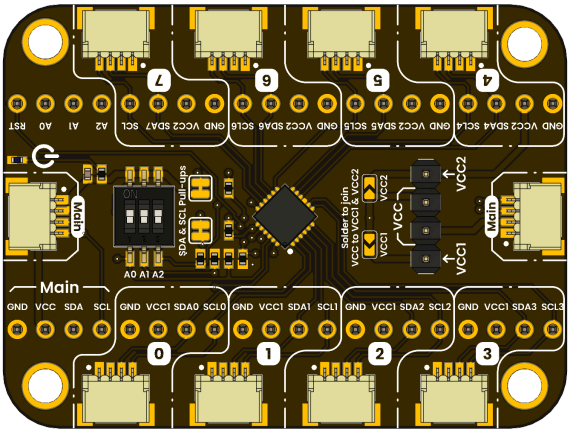

Key Features

- Eight bidirectional I²C channel multiplexing
- Individual or simultaneous channel selection
- Resolves I²C address conflicts
- Supports mixed-voltage I²C systems
- I²C and SMBus-compliant operation
- Configurable I²C slave address
- QWIIC-compatible connectors for rapid integration
- Breadboard- and prototyping-friendly layout

Hardware Features

- TCA9548A I²C bus multiplexer
- Eight downstream SCL/SDA channel pairs (SCL0/SDA0 to SCL7/SDA7)
- Upstream I²C interface for host controller connection
- Pin header access for all channels
- QWIIC connectors for selected channels
- Common ground reference across all interfaces
- On-board address configuration circuitry

Software Support

- **Arduino IDE**
- **MicroPython**

Applications

- I²C Address Conflict Resolution
- Connection of multiple peripherals with fixed or identical I²C addresses
- Sensor Expansion
- Scaling sensor networks without modifying firmware or hardware addresses
- Mixed-Voltage Systems
- Interfacing 5 V hosts with 3.3 V or lower-voltage peripherals
- Bus Capacitance Management
- Segmentation of large I²C buses to improve signal integrity
- Fault Isolation
- Preventing a malfunctioning I²C device from blocking the entire bus

CONTENTS

Description 1
DevLab format compatibility. 1
Key Features 1
Hardware Features 2
Software Support 2
Applications 2
1 The Board 4
1.1 Accessories 4
2 Ratings 4
2.1 Recommended Operating Conditions 4
3. Functional Overview 5
Channel Structure and Operation 6
Main I²C Interface 6
Typical Application 6
3.2 Board Topology 8
4 Connectors & Pinouts 9
4.1 General Pinout 9
4.2 Pinout General Description 10
I2C Address Selection 10
7 Company Information 13
8 Reference Documentation 13

1 The Board

1.1 Accessories

2 Ratings

2.1 Recommended Operating Conditions

Parameter	Description	Min	Max	Unit	Parameter
Vin	Input voltage to power on the module	1.65	5.5	V	Vin
Vih	High-level input voltage	0.7xVin	Vcc+0.5	V	Vih
Vil	Low-level input voltage	-0.5	0.3xVin	V	Vil
Icc	Supply Current	-100	100	mA	Icc
Ii	Input Current	-0.5	7	mA	Ii
Io	Output Current	-25	-	mA	Io
fscl	I2C clock frequency	0	400	kHz	fscl

3. Functional Overview

The **DevLab: I²C TCA9548A Multiplexer Module** is designed to simplify complex I²C systems by allowing a single master device to communicate with multiple peripherals, even when those devices share the same I²C address.

At its core, the TCA9548A operates as a **1-to-8 bidirectional I²C switch**, creating eight independent communication channels. Each channel behaves as a separate I²C bus segment, enabling isolation between connected devices. This makes it possible to connect multiple identical sensors or modules without address conflicts.

The selection of active channels is controlled directly from the I²C master, allowing dynamic switching between devices during runtime. Only the selected channels are connected to the main bus, ensuring stable and conflict-free communication.To support rapid prototyping and flexible integration, each channel includes:

- A **standard pin header interface**
- A **Qwiic-compatible JST (1.0 mm) connector**

This dual-interface design allows seamless connection to both traditional wiring setups and modular ecosystems such as Qwiic or STEMMA QT.

I²C Address Selection

The module supports configurable I²C addressing through three hardware address lines: **A2, A1, and A0**. These lines are exposed via an onboard **DIP switch**, allowing easy selection of the device address without modifying the circuit.

By configuring these three bits, the module can operate at any address between **0x70 and 0x77**, enabling up to eight multiplexers to coexist on the same I²C bus.

A2	A1	A0	Address
L	L	L	0x70
L	L	H	0x71
L	H	L	0x72
L	H	H	0x73
H	L	L	0x74
H	L	H	0x75
H	H	L	0x76
H	H	H	0x77

Where:

- **L** = Logic Low
- **H** = Logic High

Channel Structure and Operation

Each of the eight channels (0–7) provides a dedicated pair of **SDA and SCL lines**, effectively acting as an independent I²C branch. Devices connected to different channels are electrically isolated from one another unless their channel is actively enabled.

This structure allows the following:

- Use of multiple devices with identical addresses
- Improved signal integrity in larger systems
- Controlled communication paths managed by software

Multiple channels can also be enabled simultaneously if required, allowing grouped communication across selected devices.

Main I²C Interface

The module includes a **main I²C connector**, which serves as the primary interface between the host controller and the multiplexer.

This connector is available in two formats:

- 2.54 mm pin header
- Qwiic JST (1.0 mm)

It provides the standard I²C signals:

- SDA (data line)
- SCL (clock line)
- VCC (3.3 V / 5 V compatible)
- GND

Through this interface, the master device:

- Communicates with the TCA9548A
- Selects active channels
- Routes communication to downstream devices

Typical Application

A common use case involves connecting multiple identical sensors (for example, several devices with address **0x68**) to the same system.

Each sensor is connected to a different channel of the multiplexer. The master selects the desired channel before communicating, ensuring that only one device is active at a time and avoiding address conflicts.

3.2 Board Topology

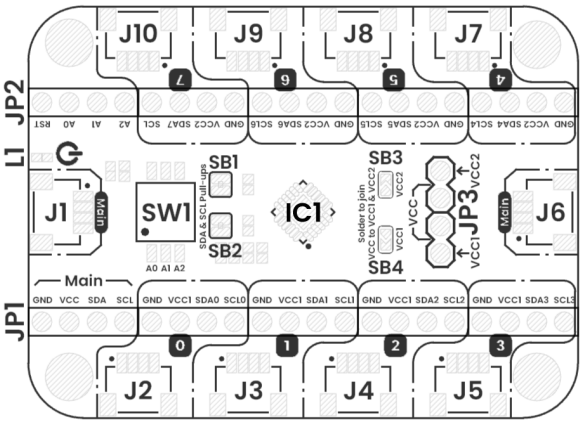

Top Side

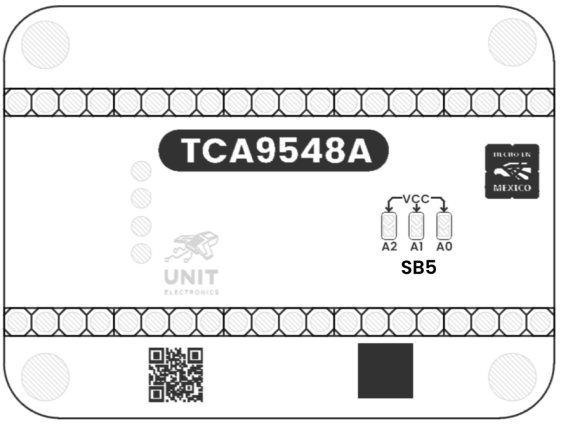

Bottom Side

Views of Board Topology

Views of Module Topology

Table 3.2.1 - Components Overview

Ref.	Description
IC1	TCA9548A
J1 & J6	Main I2C device QWIIC connector
J2-J5 & J7-J10	QWIIC Connector for each channel
JP1 & JP2	2.54 mm Castellated Holes
JP3	Voltage selector for all channels
SW1	Dip Switch for address selection
SB1	SDA Pull-Up Bridge
SB2	SCL Pull-Up Bridge
SB3	Solder bridge to join VCC2 with VCC
SB4	Solder bridge to join VCC1 with VCC
SB5	Solder bridge address selection

4 Connectors & Pinouts

4.1 General Pinout

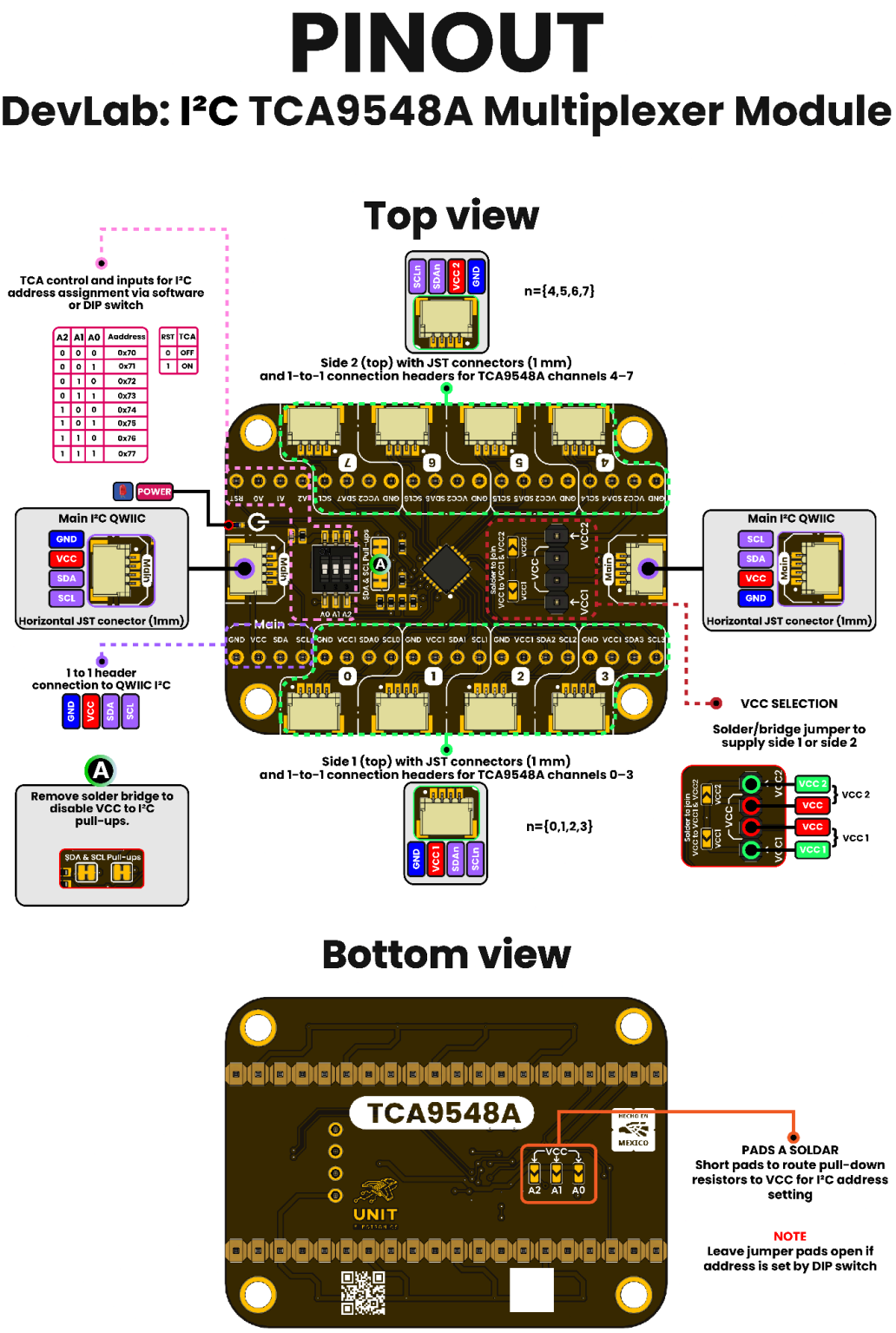

DevLab Module *General Pinout*

4.2 Pinout General Description

Pin Label	Function	Notes
+3V3	Power Supply	3.3V Power Supply
GND	Ground	Common ground reference
SCL	I2C SCL	Serial Clock Line
SDA	I2C SDA	Serial Data Line

I2C Address Selection

The address is selected via dip switch on board:

A2	A1	A0	Address
L	L	L	0x70
L	L	H	0x71
L	H	L	0x72
L	H	H	0x73
H	L	L	0x74
H	L	H	0x75
H	H	L	0x76
H	H	H	0x77

5 Board Operations

5.1 Getting Started with

This example demonstrates how to interface the **DevLab: I²C TCA9548A Multiplexer Module** using Arduino, performing a scan on each channel to detect connected I²C devices.

The test initializes the I²C bus, selects each multiplexer channel, and scans for active devices, printing the results to the serial monitor.

Hardware Connection

Connect the module to the controller using the **Main I²C interface**:

Signal	Description
SDA	I²C Data line
SCL	I²C Clock line
VCC	3.3 V or 5 V
GND	Ground

Example configuration (ESP32-style):

- SDA → GPIO 6
- SCL → GPIO 7

Board Configuration

- Select your target board (e.g., **ESP32 / DevLab Pulsar C6**)
- Ensure the correct I²C pins are defined in `Wire.begin(SDA, SCL)`
- Set Serial Monitor to **115200 baud**

Example Code

```
#include <Wire.h>

#define ADD 0x70 // Direccion del Multiplexor

void setup() {
 Wire.begin(6,7);

 Serial.begin(115200);
```

```
 Serial.println("\nI2C Scanner");
}
void tcaselect(uint8_t i) {
 if (i > 3) return;
 Wire.beginTransmission(ADD);
 Wire.write(1 << i);
 Wire.endTransmission();
}
void loop() {
 int nDevices = 0;

 Serial.println("Scanning...");
for(byte t = 0; t < 4;t++){
     tcaselect(t);
     Serial.print("TCA Port #"); Serial.println(t);

 for (byte address = 1; address < 127; ++address) {
   // The i2c_scanner uses the return value of
   // the Write.endTransmisstion to see if
   // a device did acknowledge to the address.
   if (address == ADD) continue;
   Wire.beginTransmission(address);
   byte error = Wire.endTransmission();

   if (error == 0) {
     Serial.print("I2C device found at address 0x");
     if (address < 16) {
       Serial.print("0");
     }
     Serial.print(address, HEX);
     Serial.println("  !");

     ++nDevices;
   } else if (error == 4) {
     Serial.print("Unknown error at address 0x");
     if (address < 16) {
       Serial.print("0");
     }
     Serial.println(address, HEX);
   }
  }
}
```

```
    Serial.println("done\n");
  delay(1000); // Wait 5 seconds for next scan
}
```

Code Operation

The firmware performs the following sequence:

- Initializes the I²C bus on defined GPIOs
- Iterates through all multiplexer channels (0–7)
- Selects one channel at a time using the TCA9548A
- Scans the I²C address space (0x01–0x7F)
- Reports detected devices via Serial

Expected Result

The Serial Monitor will display detected devices grouped by channel:

```
Scanning...
TCA Channel #0
Device found at 0x68
TCA Channel #1
Device found at 0x68
TCA Channel #2
No I2C devices found
...
Scan complete
```

6 Mechanical Information

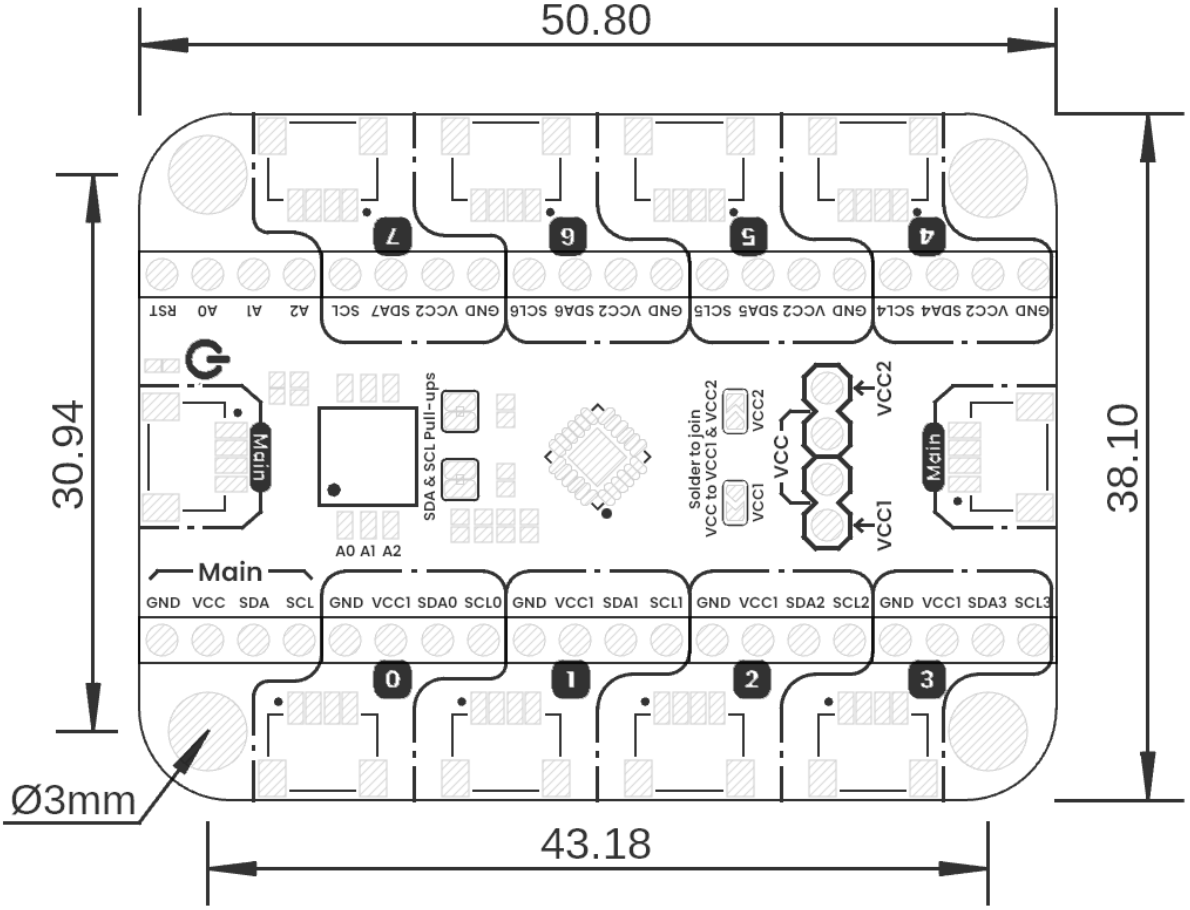

Board Dimensions in Millimeters

Mechanical dimensions in millimeters

7 Company Information

Company name	UNIT Electronics
Company website	https://uelectronics.com/
Company Address	Salvador 19, Cuauhtémoc, 06000 Mexico City, CDMX

8 Reference Documentation

Ref	**Link**
Documentation	https://github.com/UNIT-Electronics-MX/devlab_i2c_tca9548a_multiplexer_module/tree/main
Getting Started Guide	https://wiki.uelectronics.com/wiki/unit_devlab_i2c_tca9548a_multiplexer_module
Thonny IDE	https://thonny.org/
Arduino IDE	https://www.arduino.cc/en/software
Visual Studio Code	https://code.visualstudio.com/download

9 Appendix

9.1 Schematic

(https://github.com/UNIT-Electronics-MX/unit_devlab_i2c_tca9548a_multiplexer_module/blob/main/hardware/unit_sch_v_1_0_0_ue0114_devlab_i2c_tca9548a_multiplexer_module.pdf)

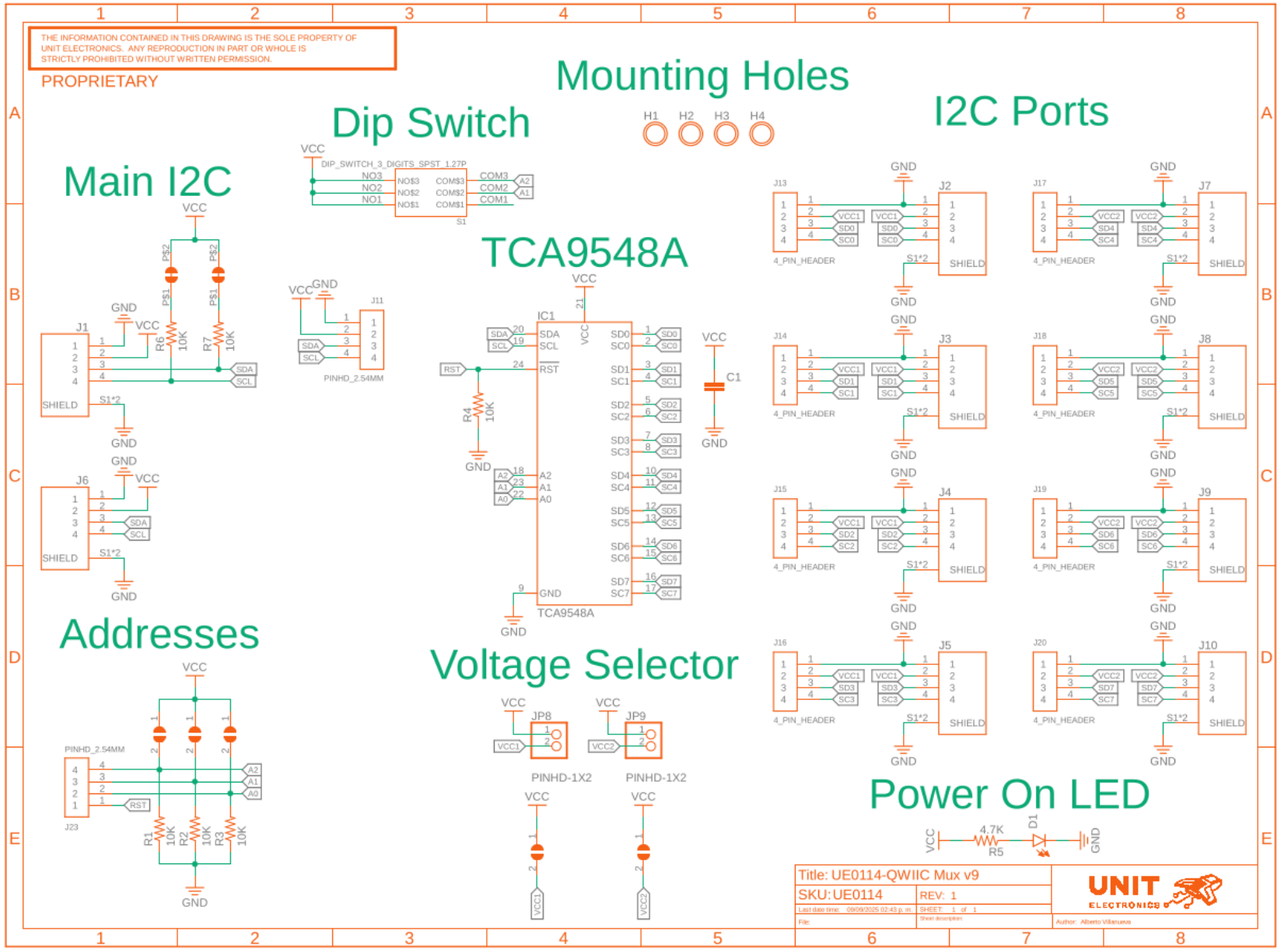
THE INFORMATION CONTAINED IN THIS DRAWING IS THE SOLE PROPERTY OF UNIT ELECTRONICS. ANY REPRODUCTION IN PART OR WHOLE IS STRICTLY PROHIBITED WITHOUT WRITTEN PERMISSION.
PROPRIETARY
Mounting Holes
H1 H2 H3 H4
Dip Switch
DIP_SWITCH_3_DIGITS_SPST_1.27P
Main I2C
J1
J6
TCA9548A
IC1
Addresses
PINHD_2.54MM
J23
Voltage Selector
JP8
JP9
PINHD-1X2
I2C Ports
J2
J3
J4
J5
J7
J8
J9
J10
J11
J13
J14
J15
J16
J17
J18
J19
J20
4_PIN_HEADER
SHIELD
Power On LED
D1
R5
4.7K
Title: UE0114-QWIIC Mux v9
SKU: UE0114
REV: 1
UNIT ELECTRONICS