MSPM0C1104SDSGR MCU Dev Board

DEVLAB FACTOR

Mfr. Part #: UE0104

Product Reference Manual (V1.0)

Description

The **MSPM0C110x** microcontrollers are part of the **MSP ultra-low-power 32-bit MCU family** from Texas Instruments, built around an enhanced **Arm® Cortex®-M0+ core**. These cost-optimized devices provide excellent analog performance and broad communication support while maintaining minimal power consumption, ideal for **sensor interfaces**, **IoT nodes**, and **battery-powered applications**.

The **MSPM0C1104SDSGR** variant integrates **16 KB of flash** and **1 KB of SRAM**, running from a supply voltage range of **1.62 V to 3.6 V**. A high-accuracy **24 MHz internal oscillator** eliminates the need for an external crystal.

Additional on-chip features include a **12-bit ADC (1.5 Msps)**, a **CRC-16 accelerator**, a **DMA controller**, and an **integrated temperature sensor**.

Digital peripherals include multiple timers, PWM channels, a watchdog, and UART, SPI, and I²C interfaces.

DevLab format compatibility.

The DevLab format is a standardized hardware layout that exposes most of the microcontroller or integrated circuit functional pins, including connections for external sensors, converters, and other peripheral devices. It provides direct access to I²C, SPI, UART, and additional communication interfaces for flexible hardware interaction.

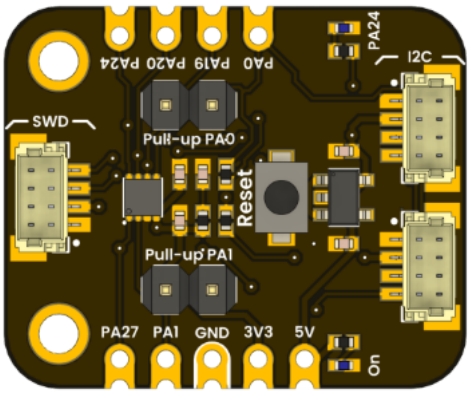

Key Features

- **Core**
  Arm® Cortex®-M0+ CPU running up to **24 MHz**
- **Memory**
  Up to **16 KB Flash**
  1 KB SRAM
- **Analog**
  12-bit ADC, Configurable internal VREF (1.4 V / 2.5 V)
  On-chip temperature sensor
  Supply voltage monitor
- **Power and Performance**
  Supply range: **1.62 V – 3.6 V**
  Operating temperature: **-40 °C – 125 °C**
- Low-power modes:
  - RUN: 87 µA/MHz
  - STOP: 609 µA @ 4 MHz / 311 µA @ 32 kHz
  - STANDBY: 5 µA (SRAM retention)
  - SHUTDOWN: 200 nA
- **Digital and Communication Peripherals**
  1× UART (supports LIN, IrDA, DALI, Manchester, Smart-Card)
  1× SPI (up to 12 Mbps)
  1× I²C (FM+, SMBus, PMBus)
  DMA, CRC-16, advanced 16-bit timer, watchdog

- **Clock System**
  Internal 24 MHz oscillator (–2 % / +1.2 %)
  Internal 32 kHz oscillator (LFOSC)
- **Debug Interface**
  2-pin SWD (SWCLK, SWDIO)

Hardware Overview

- **Onboard Voltage Regulator: Integrated** 5 V → 3.3 V LDO for stable MCU operation from USB or an external 5 V supply.
- **Communication Interface: 4-pin JST 1.0 mm** connector for programming and I²C communication, compatible with **DevLab** and **Qwiic** wiring formats.
- **Reset Button: Manual** hardware reset input connected to **PA1/NRST.**
- **Status LED (PA24): Indicates** power or firmware activity.

Software Support

- **MSPM0 SDK/VS Code**

Applications

- **IoT Edge Nodes**
  Environmental data loggers, wireless sensor hubs, and BLE/Wi-Fi bridges (via external modules).
- **Consumer and Smart Home Devices:** Smart switches, thermostats, touch controls, and battery-operated gadgets.
- **Industrial and Instrumentation** Pressure, temperature, or humidity sensor interfaces, control modules, and fan/power monitors.
- **Robotics and Automation:** Motor controllers, PWM-driven lighting systems, and actuator management units.
- **Educational and Training Platforms:** Entry-level MCU programming kits, CMSIS-DAP training tools, and embedded systems learning modules.
- **Interface and Communication Adapters: UART-to-I²C** or SPI-to-CAN converter nodes, USB-to-sensor gateways, and low-power protocol translators.

CONTENTS

Description..... 1
DevLab format compatibility..... 1
Key Features..... 1
Hardware Overview..... 2
Software Support..... 2
Applications..... 2
1. The Board..... 4
1.1 Accessories..... 4
2 Ratings..... 4
Recommended Operating Conditions* Optimal thermal management is required for the regulator to perform reliably at maximum output current..... 5
3.2 Board Topology..... 11
4 Connectors & Pinouts..... 13
4.1 General Pinout..... 13
4.2 Pinout General Description..... 14
5 Board Operation..... 15
6 Mechanical Information..... 16
7 Company Information..... 16
8 Reference Documentation..... 17

1. The Board

1.1 Accessories

-

2 Ratings

Parameter	Description	Min	Typ	Max	Unit
Vcc	Input voltage to power on the module	2.5	-	5.5	V
Vdd	Input voltage to power on the microcontroller	1.62	-	3.6	V
Ivcc	Current flowing into Vdd pin of microcontroller	-	-	100	mA
I3v3*	Maximum current of 3V3 regulator	-	400	600	mA
Iio (SDIO)	Current sunk or sourced by SDIO pin	-	-	6	mA
Iio (ODIO)	Current sunk or sourced by SDIO pin	-	-	20	mA
Vih (ODIO)	Input high level voltage at 5V tolerant pins	2	-	5.5	V
Vih	Input high level voltage (except ODIO and Reset)	0.7*Vin	-	Vin+0.3	V
Vil (ODIO)	Input low level voltage at 5V tolerant pins	-0.3	-	0.8	V
Vil	Input low level voltage (except ODIO and Reset)	-0.3	-	0.3*Vin	V
Voh	Output high level voltage at standard-drive pins	Vin-0.5	-	-	V
Vol (ODIO)	Output low level voltage at 5V tolerant pins	-	-	0.5	V

Vol	Output low level voltage at standard-drive pins	-	-	0.4	V
fmax (ODIO)	Port output frequency at 5V tolerant pins	-	-	1	MHz
fmax (SDIO)	Port output frequency at standard-drive pins	-	-	24	MHz

Recommended Operating Conditions* Optimal thermal management is required for the regulator to perform reliably at maximum output current.

3. Functional Overview

The MSPM0C1104 development board provides a compact and efficient pin configuration suitable for space-constrained embedded applications. Despite its minimal pin count, it supports essential communication interfaces, including I²C, SPI, and UART, along with analog input capability and SWD debugging.

The device leverages multiplexed GPIO functionality to maximize flexibility, making it ideal for low-cost designs, sensor nodes, and simple control systems where footprint and power efficiency are critical.

Pin Mapping

Signal	Analog	Primary Functions
PA0	—	BEEP / I2C_SDA / TIMG8_C0 / SPI0_CS1 / FCC_IN / TIMA_FAL1
PA1	—	I2C_SCL / TIM8_C0 / HFCLK_IN / TIMA0_C1
PA19	—	SWDIO / SPI0_SCK / SPI0_POCI / TIMA0_C2 / TIMG14_C0 / UART0_CTS
PA20	A6	SWCLK / TIMA_FAL1 / SPI0_PICO / TIMA0_C2N / TIMA0_C0 / UART0_RTS
PA24	A3	SPI0_CS2 / TIMG14_C1 / TIMG14_C2 / TIMA0_C3N / UART0_RX
PA26	A1	TIMG8_C0 / UART0_RX / SPI0_POCI / BEEP / TIMG14_C0 / TIMA_FAL0
PA27	A0	TIMG8_C1 / SPI0_CS3 / TIMA0_CON / UART0_TX / SPI0_POCI / TIMA_FAL2

Power and Reset

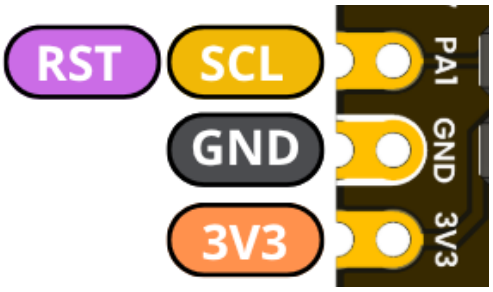

Signal	I/O
VDD	3V3
VSS	GND
NRST	PA1

I²C Interface

In the WSON-8 (DSG) package, the PA1 pin is multiplexed between the NRST (reset) function and the I²C clock signal (SCL). This dual functionality imposes a design constraint when enabling the I²C interface.

Signal	GPIO
SDA	PA0
SCL	PA1

The I²C interface supports standard open-drain operation and is compatible with typical pull-up resistor configurations.

Reset Pin Multiplexing Behavior

By default, **PA1 is configured as NRST**, providing an external hardware reset input. To enable I²C functionality:

- The NRST function must be **disabled via configuration registers**
- PA1 must be reconfigured as a **GPIO peripheral pin for I²C SCL**

Functional Trade-Off

Disabling the NRST function results in the loss of external hardware reset capability. In this configuration:

- System reset is limited to **software-initiated reset mechanisms**
- Recovery from fault conditions depends on firmware integrity

Failure and Recovery Considerations

In scenarios where the system enters an invalid or locked state (e.g., I²C bus contention, firmware fault, or peripheral misconfiguration):

- A software reset may not be executed successfully
- The device may require **power cycling** to recover normal operation

Design Recommendations

For reliable system operation:

- Maintain NRST functionality when possible, especially in:
  - Debug environments
  - Safety-critical applications
- If I²C is required on PA1:
  - Implement a **watchdog timer (WDT)** for automatic recovery
  - Consider adding an **external reset supervisor** or power-control mechanism

Engineering Consideration

This limitation is inherent to **low pin-count device packaging**, where multiple peripheral functions share the same physical pin. Designers must evaluate the trade-off between interface availability and system robustness when selecting pin configurations.

UART Interface

Signal	GPIO	Pin
TX	PA27	1
RX	PA24	8

ADC Channels

Channel	GPIO	Pin
A0	PA27	1
A3	PA24	8
A6	PA20	7 *(shared with SWCLK)*

Debug Interface (SWD)

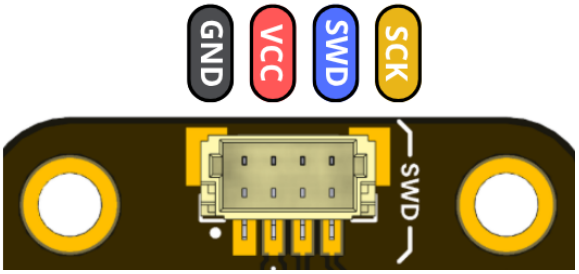

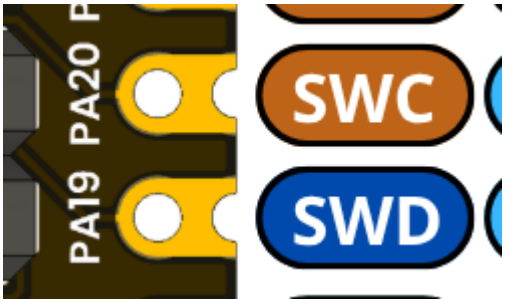

Signal	GPIO	Pin
SWDIO	PA19	6
SWCLK	PA20	7

These pins are reserved for programming and debugging.

Available GPIO Summary

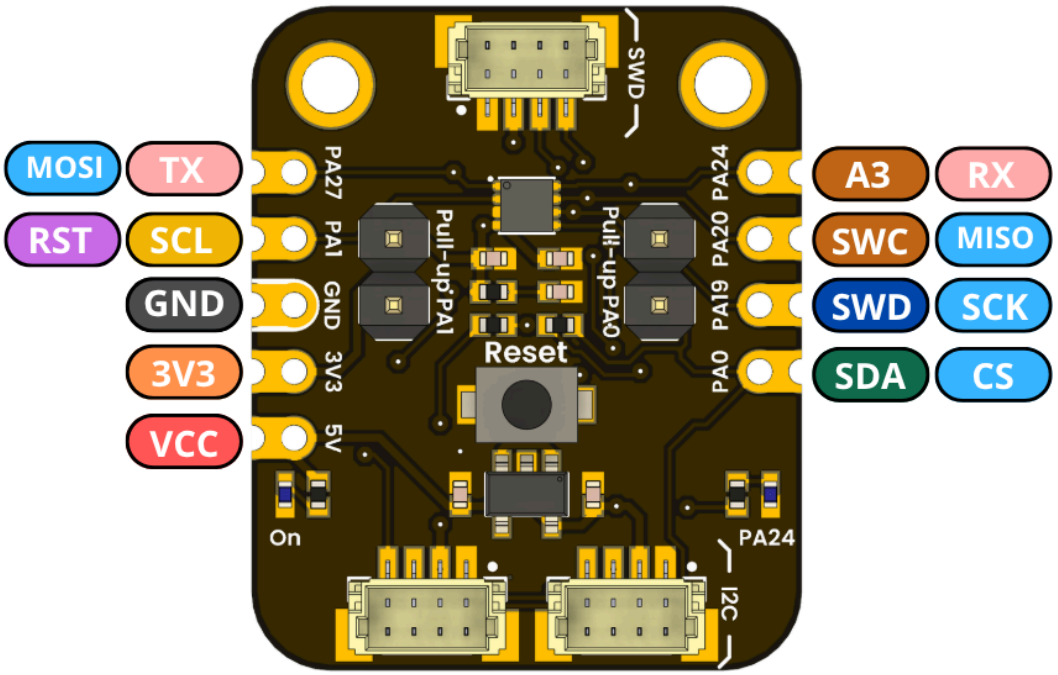

GPIO	Notes
PA27	ADC / UART TX
PA24	ADC / UART RX
PA0	I²C SDA
PA1	I²C SCL / Reset
PA20	Shared (ADC / SWCLK)
PA19	Debug (SWDIO)

Design Considerations

- SWD debug consumes **2 dedicated pins (PA19, PA20)**.
- Only **3–4 GPIOs remain available** in typical applications.
- I²C and UART can coexist, but careful pin planning is required.
- ADC functionality is preserved on key pins.

LED Enable Solder Pad

The **LED Enable** solder pad provides a hardware configuration point to connect the microcontroller pin **PA24** to an onboard LED.

- When the pad is **solder-bridged**, PA24 is electrically connected to the LED, allowing it to be used for
  - Status indication
  - Debugging (e.g., blinking patterns)
- When the pad is **open**, PA24 remains free for general-purpose I/O use.

This design allows flexible usage depending on whether visual feedback is required in the application.

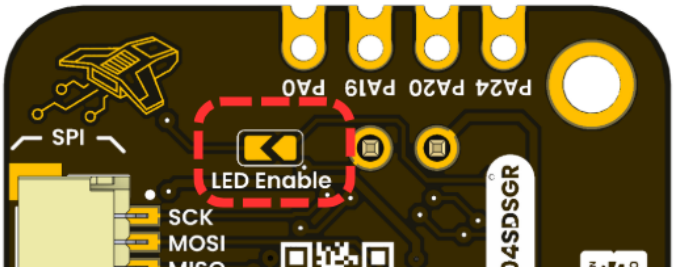

RST Enable Solder Pad

The **RST Enable** solder pad controls the availability of the reset function through pin **PA1**.

- When the pad is **soldered**, PA1 is configured as a **reset pin**, enabling hardware reset functionality for the microcontroller.
- When the pad is **open**, the reset function is disabled, and PA1 can be repurposed as a **GPIO or communication pin**.

Important Considerations:

- For **I²C communication**, it is recommended to **disable the reset function (open pad)** to allow PA1 to operate as part of the I²C interface.
- If reset is disabled, system reset must be handled via **software mechanisms** (e.g., register-based reset).

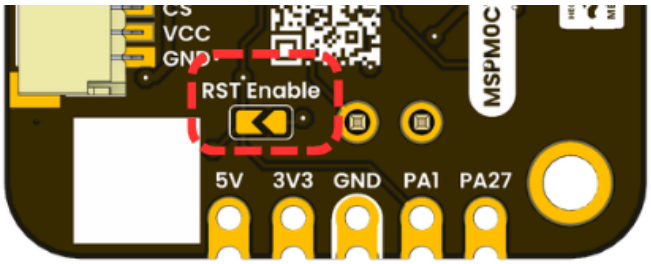

3.2 Board Topology

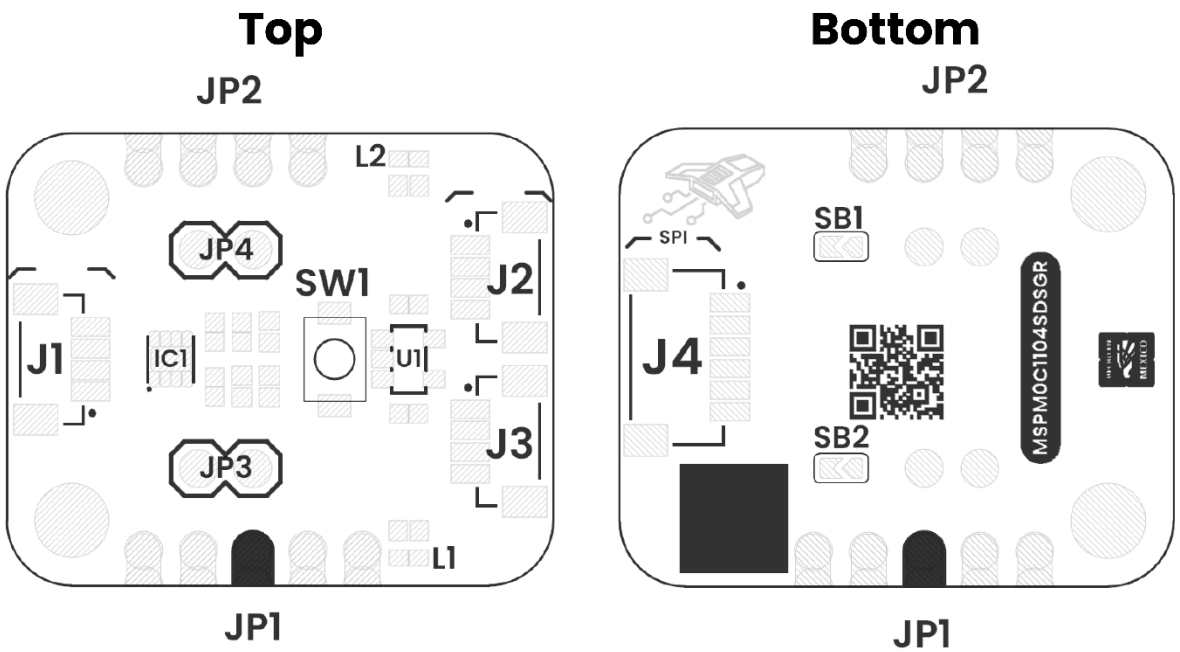

Views of Board Topology

Views of Topology

Table 3.2.1 - Components Overview

Ref.	Description
IC1	MSPM0C1104SDSGR
L1	Power On LED
L2	Built In LED at PA24
U1	AP2112K 3V3 Regulator
JP1	2.54 mm Castellated Holes
JP2	2.54 mm Castellated Holes
JP3	2.54 mm Headers
JP4	2.54 mm Headers
J1	JST 1 mm pitch for SWD

J2	QWIIC Connector (JST 1 mm pitch) for I2C
J3	QWIIC Connector (JST 1 mm pitch) for I2C
J4	JST 1 mm pitch for SPI
SW1	Reset Push Button
SB1	Solder Bridge for LED Built In Enable
SB2	Solder Bridge for Reset Push Button Enable

4 Connectors & Pinouts

4.1 General Pinout

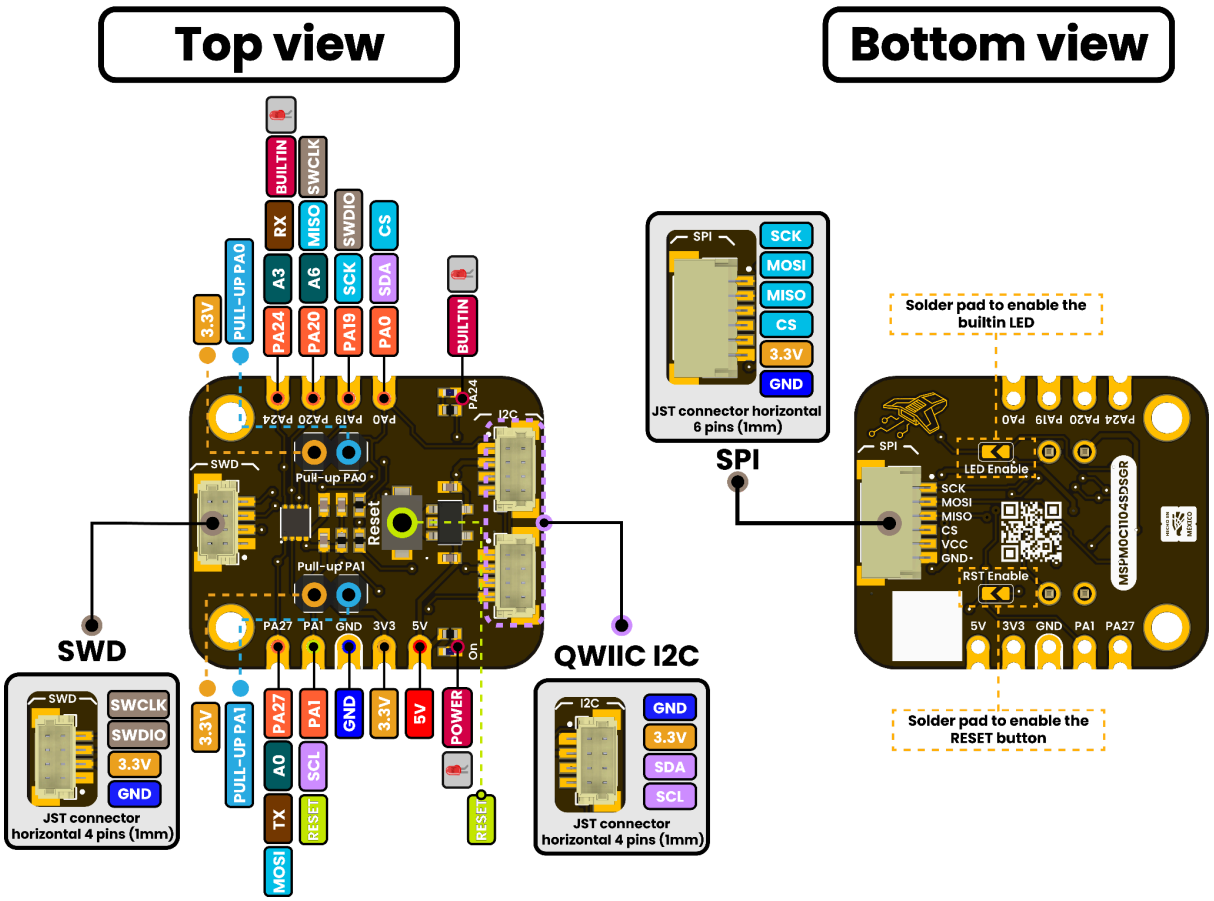

General Pinout

4.2 Pinout General Description

Pin Label	Function / Notes
VCC	Power Input
GND	Ground
PA0	I2C0_SDA/CS
PA19	**SWDIO**/SCK
PA20/A6	**SWCLK**/MISO
PA24/A3	A3/RX - LED_BUILTIN
PA27/A0	TX/MOSI
PA1	NRST/I2C0_SCL

5 Board Operation

5.1 Getting Started with Ubuntu (TI Native SDK)

This section describes how to set up a native development environment on Ubuntu for the **MSPM0C1104** using the official **Texas Instruments SDK**, including toolchain installation, project compilation, and firmware flashing.

5.1 System Requirements

- Ubuntu 20.04 or newer
- USB access permissions
- Internet connection for dependency installation

5.2 Clone Repository with Submodules

The project integrates the official TI MSPM0 SDK as a Git submodule. Clone the repository using:

```
git clone --recurse-submodules
https://github.com/UNIT-Electronics-MX/mspm0c1104sdsgr_ti.git && \
cd mspm0c1104sdsgr_ti/mspm0c1104_template && \
code .
```

This will:

- Clone the main repository
- Initialize and download the TI SDK
- Open the project in Visual Studio Code

5.3 Project Structure Overview

The template follows a modular structure:

```
mspm0c1104_template/
├── examples/      # Application examples (e.g., GPIO, Blink)
├── libs/          # External libraries and SDK components
├── src/           # Core application source code
├── startup_*.c    # Startup and vector table
└── Makefile       # Build configuration
```

5.4 Install Toolchain

Install the ARM GCC toolchain required for MSPM0:

```
sudo apt update

sudo apt install gcc-arm-none-eabi
```

Verify installation:

```
arm-none-eabi-gcc --version
```

5.5 Install Flashing Tool (pyOCD)

The programming interface is handled using **pyOCD**:

```
sudo apt install pipx -y
pipx install pyocd
pipx ensurepath
```

Reload environment:

```
source ~/.bashrc
```

Verify installation:

```
pyocd --version
```

5.6 Build Example Project

Navigate to an example project (e.g. Blink):

```
cd examples/GPIO/blink/
```

Compile using:

```
make
```

Expected output:

- `.elf` → executable file
- `.bin` → binary image

5.7 Connect Hardware

Connect the **DevLab Multi-Protocol Programmer** to the MSPM0 board via SWD connector. The recommended method is using the DevLab 4-pin JST (1.0 mm) connector; alternatively, the 10-pin header can be used. Ensure that the correct signals are connected: **P1.5 (SWDIO)** and **P1.6 (SWCLK)** from the multiprotocol programmer GPIOs.

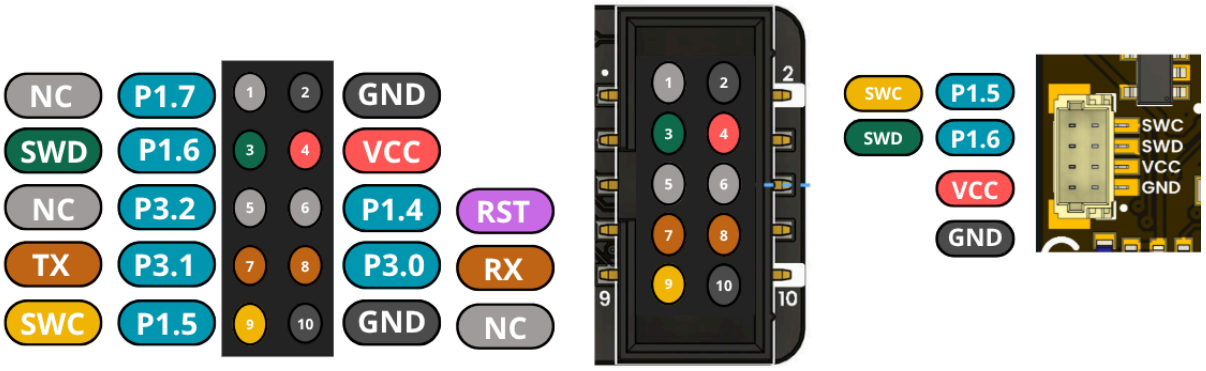

Important: *When powering the board through the multiprotocol programmer, ensure that the VCC level is set to **3.3 V**. Applying a higher voltage may damage the MSPM0C1104SDSGR MCU Dev Board.*

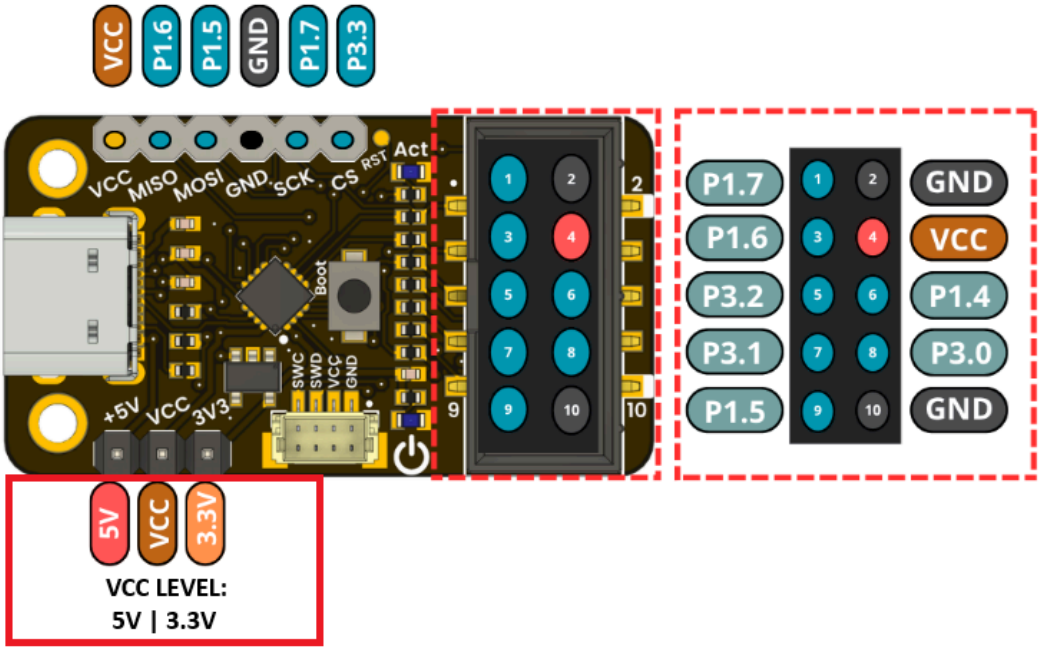

Verify the following conditions:

- The board is supplied with **3.3 V**
- SWD connections are correctly established
- The USB programmer is recognized by the system (`lsusb` or `/dev/ttyACM*`)

  - SWD connections

Signal	MSPM0 Pin	Programmer Pin
SWDIO	SWDIO	P1.6
SWCLK	SWCLK	P1.5
GND	GND	GND
VCC	3.3V	VCC(3.3V)*

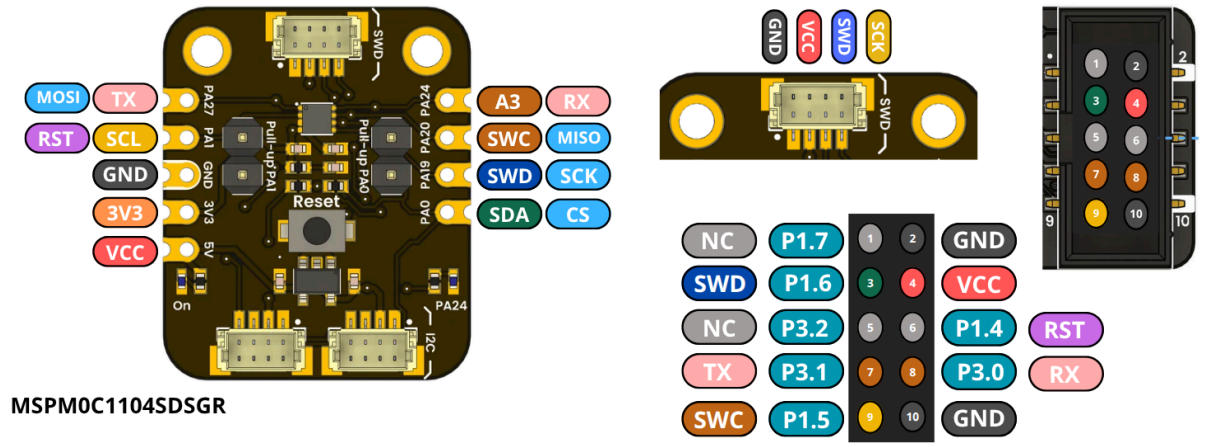

5.8 Flash Firmware

Upload the compiled firmware using:

```
make flash
```

Optional: specify target explicitly

```
pyocd flash -t mspm0c1104 build/*.elf
```

5.10 Verification

After flashing:

- The **Blink example** should toggle the LED
- If no output:
  - Verify SWD connections
  - Check power supply
  - Confirm correct target

5.11 Notes

- The NRST pin must be correctly configured if shared with I²C
- Ensure no conflicts between debug interface and application GPIO usage
- Submodules must remain initialized for SDK integrity

6 Mechanical Information

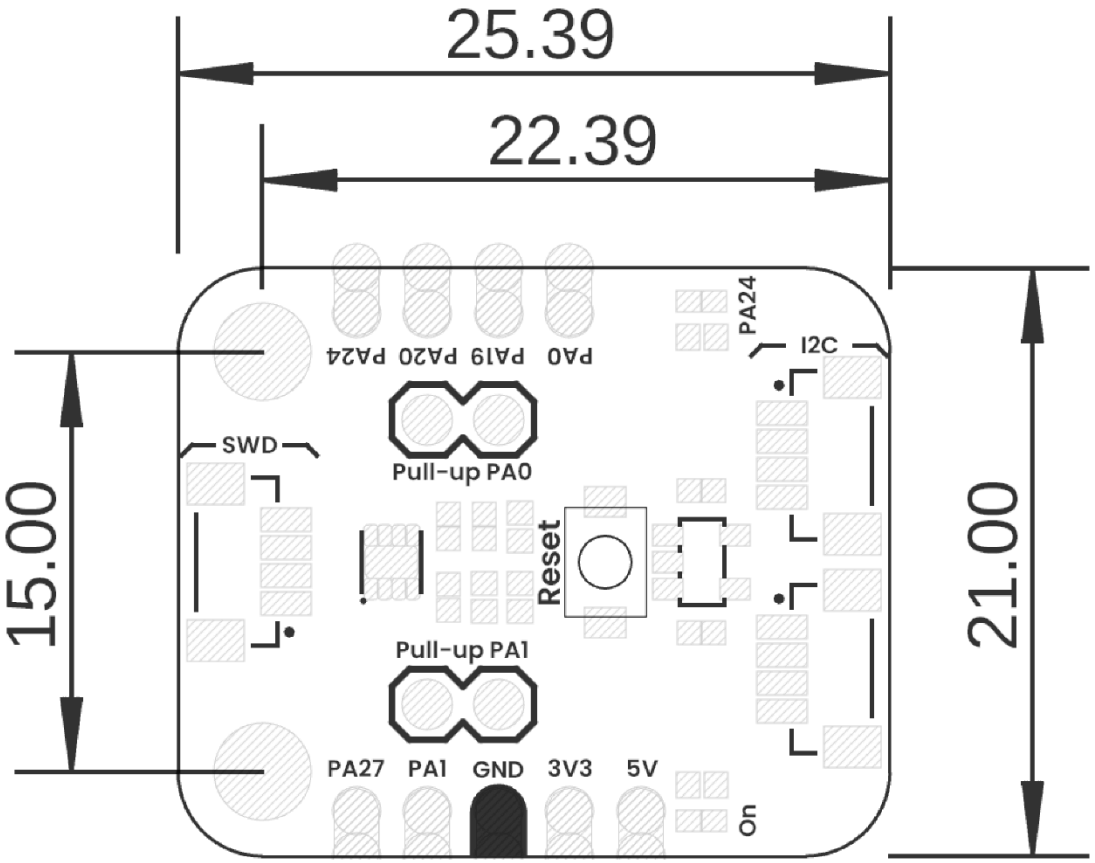

Board Dimensions in Millimeters

Mechanical dimensions in millimeters

7 Company Information

Company name	UNIT Electronics
Company website	https://uelectronics.com/
Company Address	Salvador 19, Cuauhtémoc, 06000 Mexico City, CDMX

8 Reference Documentation

Ref	Link
Documentation	https://github.com/UNIT-Electronics-MX/unit_devlab_mspm0c1104sdsgr_development_board
Wiki	https://wiki.uelectronics.com/wiki/unit_devlab_mspm0c1104sdsgr_development_board
DevLab Multi-Protocol Programmer	https://uelectronics.com/producto/ch552-usb-modulo-programador-multiprotocolo-swd-jtag-updi-usbasp-unit-devlab/
Thonny IDE	https://thonny.org/
Arduino IDE	https://www.arduino.cc/en/software
Visual Studio Code	https://code.visualstudio.com/download
MSPM0C1104 SDSGR MCU - DataSheet	https://www.ti.com/lit/ds/symlink/mspm0c1104.pdf?ts=1762978469851&ref_url=https%253A%252F%252Fwww.ti.com%252Fsitesearch%252Fen-us%252Fdocs%252Funiversalsearch.tsp%253FlangPref%253Den-US%2526nr%253D1793%2526searchTerm%253DMSPM0C1104

9 Appendix

9.1 Schematic

(https://github.com/UNIT-Electronics-MX/unit_devlab_mspm0c1104sdsgr_development_board/blob/main/hardware/unit_sch_V_0_0_1_ue0104_mspm0c1104sdsgr_devlab.pdf
)

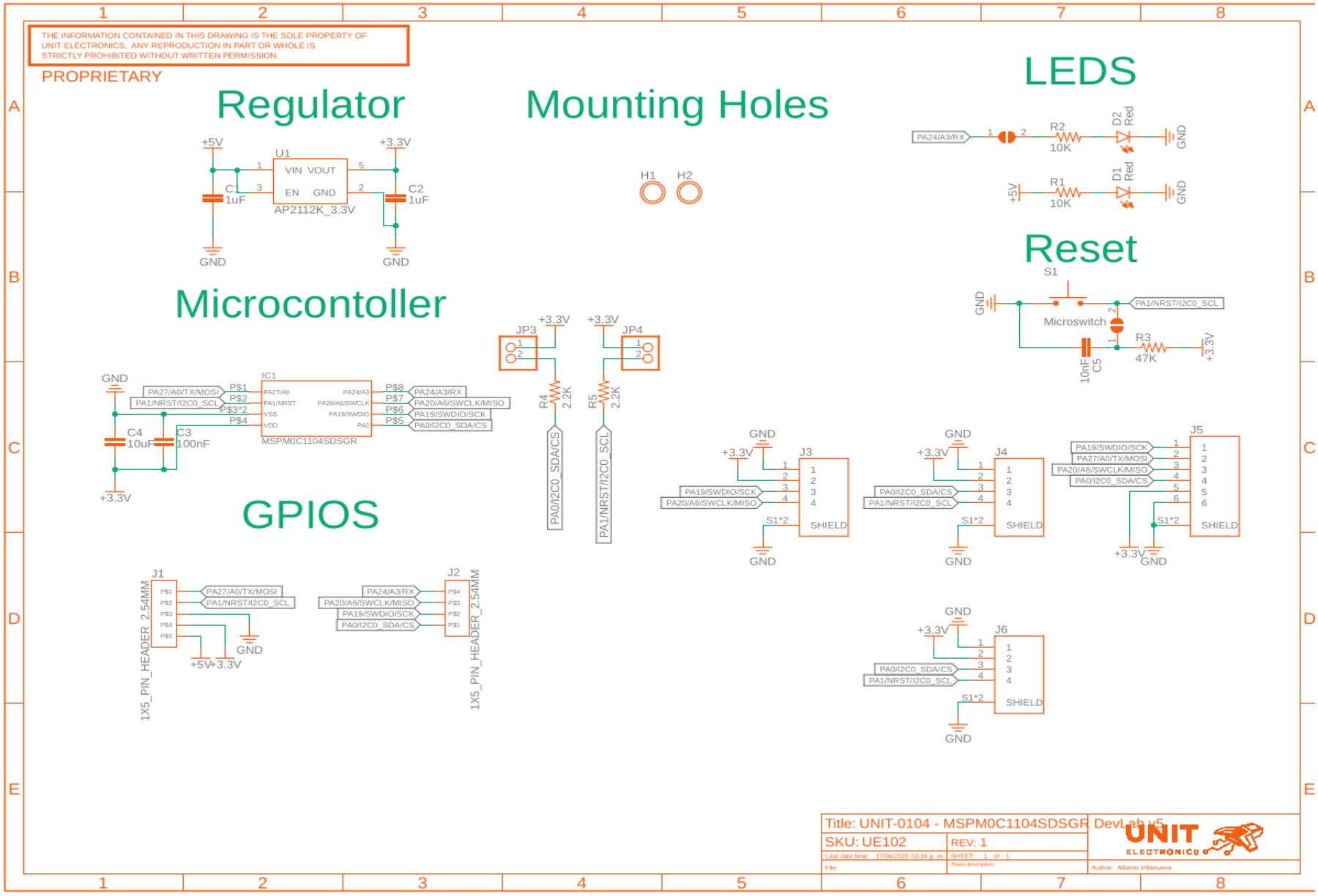
THE INFORMATION CONTAINED IN THIS DRAWING IS THE SOLE PROPERTY OF UNIT ELECTRONICS. ANY REPRODUCTION IN PART OR WHOLE IS STRICTLY PROHIBITED WITHOUT WRITTEN PERMISSION.
PROPRIETARY
Regulator
+5V
+3.3V
U1
VIN VOUT
EN GND
AP2112K_3.3V
C1 1uF
C2 1uF
GND
Mounting Holes
H1
H2
LEDS
PA24/A3/RX
R2 10K
D2 Red
R1 10K
D1 Red
Reset
S1
Microswitch
PA1/NRST/I2C0_SCL
R3 47K
10nF C5
Microcontoller
IC1
MSPM0C1104SDSGR
PA27/A0/TX/MOSI
PA1/NRST/I2C0_SCL
PA24/A3/RX
PA20/A6/SWCLK/MISO
PA19/SWDIO/SCK
PA0/I2C0_SDA/CS
C4 10uF
C3 100nF
JP3
JP4
R4 2.2K
R5 2.2K
GPIOS
J1
J2
1X5_PIN_HEADER_2.54MM
J3
J4
J5
J6
SHIELD
Title: UNIT-0104 - MSPM0C1104SDSGR
DevLab v5
SKU: UE102
REV: 1
Author: Alberto Villanueva