Product Reference Manual (V1.0)

Description

The **UNIT JUN R3** is a multifunctional and flexible development board based on the widely adopted **ATmega328P** 8-bit AVR microcontroller. It maintains full compatibility with the standard **UNO form factor**, ensuring seamless integration with existing shields, libraries, and development workflows.

The board incorporates modern enhancements to extend its usability in both educational and professional environments. These include an integrated **5×5 NeoPixel RGB LED matrix (WS2812B-1515)** for visual feedback, a **USB-C interface** for reliable power and programming, and a **JST 1.0 mm 4-pin expansion connector** compatible with **STEMMA QT** and **Qwiic® ecosystems**, enabling rapid connection of I²C-based peripherals without additional wiring.

Designed for ease of use and rapid prototyping, the UNIT JUN R3 provides access to multiple communication interfaces such as **UART, SPI, and I²C**, along with digital and analog I/O capabilities. Its architecture supports a wide range of embedded applications, from basic educational projects to more advanced system integration tasks.

The board operates at **5 V logic levels** with a **16 MHz clock**, delivering stable and predictable performance for real-time applications. Integrated features such as onboard voltage regulation, reset circuitry, and USB-to-serial communication ensure compatibility with standard development tools, including **Arduino IDE** and **PlatformIO**.

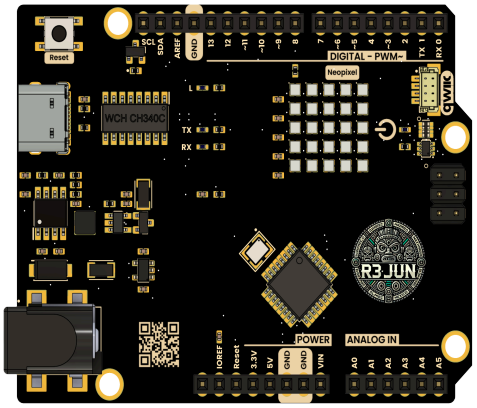

DevLab format compatibility.

Simplicity and compatibility are the core principles of the **DevLab form factor**. This standard defines a **compact and communication-optimized board layout**, ensuring straightforward connection and interoperability among DevLab modules.

Applications

- Prototyping and embedded system development
- Educational and training platforms
- IoT sensor nodes and basic control systems
- Interactive devices with visual feedback
- Wearable and portable electronics
- Sensor interfacing and data acquisition

Hardware Features

- **ATmega328P Microcontroller**
  8-bit AVR MCU operating at 16 MHz, providing reliable performance for embedded applications.
- **UNO-Compatible Form Factor**
  Standard pin layout compatible with Arduino UNO shields and accessories.
- **5×5 NeoPixel RGB LED Matrix (WS2812B-1515)**
  Integrated addressable RGB LEDs for visual feedback, controlled via a single digital pin (D8).
- **USB-C Interface**
  Provides power supply and programming interface through an integrated USB-to-serial converter.
- **Power Supply Options**
  Supports USB-C (5 V) or external DC input (7–20 V) with onboard voltage regulation.
- **JST 1.0 mm 4-Pin Connector (Qwiic® / STEMMA QT Compatible)**
  Enables direct connection of I²C devices without soldering or additional wiring.
- **Communication Interfaces**
  Includes UART, SPI, and I²C hardware peripherals for flexible connectivity.
- **Digital and Analog I/O**
  Multiple GPIO pins with PWM support and analog inputs via ADC.
- **Reset Circuit**
  Manual reset button and auto-reset via DTR for seamless programming.
- **Clock System**
  External 16 MHz crystal oscillator ensures stable timing and operation.
- **Onboard LEDs**
  Status indicators for power and user-defined signals.

Software Support:

- **Arduino IDE Compatibility**
  Fully supported using the standard Arduino UNO core for quick development.
- **PlatformIO Support**
  Advanced development environment with dependency management and project structure.
- **Extensive Library Ecosystem**
  Compatible with a wide range of Arduino libraries for sensors, displays, and communication.
- **NeoPixel Library Support**
  Supports addressable RGB LED control using common libraries such as Adafruit NeoPixel.
- **Standard Communication Libraries**
  Native support for Wire (I²C), SPI, and Serial (UART) interfaces.
- **USB Programming and Debugging**
  Firmware upload and serial monitoring via USB-C connection.
- **Bootloader Compatibility**
  Uses standard Arduino bootloader with automatic reset for easy flashing.

CONTENTS

Description..... 1
DevLab format compatibility..... 1
Software Support:.....2
1. The Board..... 4
1.1 Accessories.....4
2 Ratings.....4
2.1 Recommended Operating Conditions.....4
Power Consumption.....4
3. Functional Overview..... 5
Pinout and Expansion Overview.....6
I2C Pins – JST Connector.....9
Integrated Peripherals.....10
Signal Compatibility.....10
Block Diagram.....13
Pin Distribution..... 16
Pinout General Description..... 16
5 Board Operations.....18
6 Mechanical Information.....19
7 Company Information.....19
8 Reference Documentation..... 20

1. The Board

1.1 Accessories

-

2 Ratings

2.1 Recommended Operating Conditions

Power Consumption

Symbol	Description	Min	Typ	Max	Unit	Condition
V_IN max	Maximum input voltage (VIN pin/jack)	7	—	20	V	External DC jack input
V_USB max	Maximum input voltage (USB-C port)	—	—	5.5	V	USB-C connector
I_max	Maximum output current (board level)	1.2	1.5	2.0	A	Total delivery
I_3V3	Current available at 3.3 V rail	—	400	600	mA	Regulator output
IOH Max	Output high current per GPIO	—	—	8	mA	At VDD – 0.4 V (VOH)
IOL Max	Output low current per GPIO	—	—	8	mA	At VSS + 0.4 V (VOL)

DC Characteristics ATmega328

(TA = –40 °C to +125 °C, VCC = 2.7 V to 5.5 V)

Parameter	Condition	Symbol	Min	Typ	Max	Unit
Input low voltage (except XTAL1 and RESET)	VCC = 2.7 V to 5.5 V	VIL	–0.5	—	0.3 VCC	V
Input high voltage (except XTAL1 and RESET)	VCC = 2.7 V to 5.5 V	VIH	0.6 VCC	—	VCC + 0.5	V
Input low voltage (XTAL1 pin)	VCC = 2.7 V to 5.5 V	VIL1	–0.5	—	0.1 VCC	V
Input high voltage (XTAL1 pin)	VCC = 2.7 V to 5.5 V	VIH1	0.7 VCC	—	VCC + 0.5	V

3. Functional Overview

The **UNIT JUN R3** is a development board inspired by the widely adopted UNO architecture, redesigned to extend its capabilities with modern features and improved integration for embedded system development. Rather than being a direct clone, it introduces functional enhancements aimed at simplifying hardware interaction and accelerating prototyping workflows.

At its core, the board is based on the **ATmega328P**, maintaining full compatibility with the Arduino ecosystem while incorporating additional hardware elements that reduce the need for external components. A key enhancement is the integrated **5×5 NeoPixel RGB LED matrix (WS2812B-1515)**, which enables built-in visual feedback for user interfaces, debugging, and interactive applications without requiring external displays.

To improve interoperability with modern peripherals, the board includes an onboard **I²C level shifting stage**, allowing seamless communication between **3.3 V and 5 V devices**. This ensures reliable operation with a wide range of sensors and modules without the need for external level shifters.

The inclusion of a **JST 1.0 mm 4-pin connector**, compatible with **Qwiic® and STEMMA QT ecosystems**, simplifies system integration by enabling plug-and-play connectivity for I²C devices. Additionally, the adoption of a **USB-C interface** improves mechanical robustness and power delivery compared to legacy USB connectors.

Overall, the UNIT JUN R3 represents an evolution of the classic UNO platform, focusing on **integration, usability, and modern interface support**, making it suitable for both educational environments and advanced prototyping applications.

Pinout and Expansion Overview

The UNIT JUN R3 exposes all microcontroller pins through a standard UNO-compatible header layout, enabling seamless integration with existing shields and external peripherals. In addition, the board incorporates dedicated connectors and enhanced functionality to simplify expansion and improve usability.

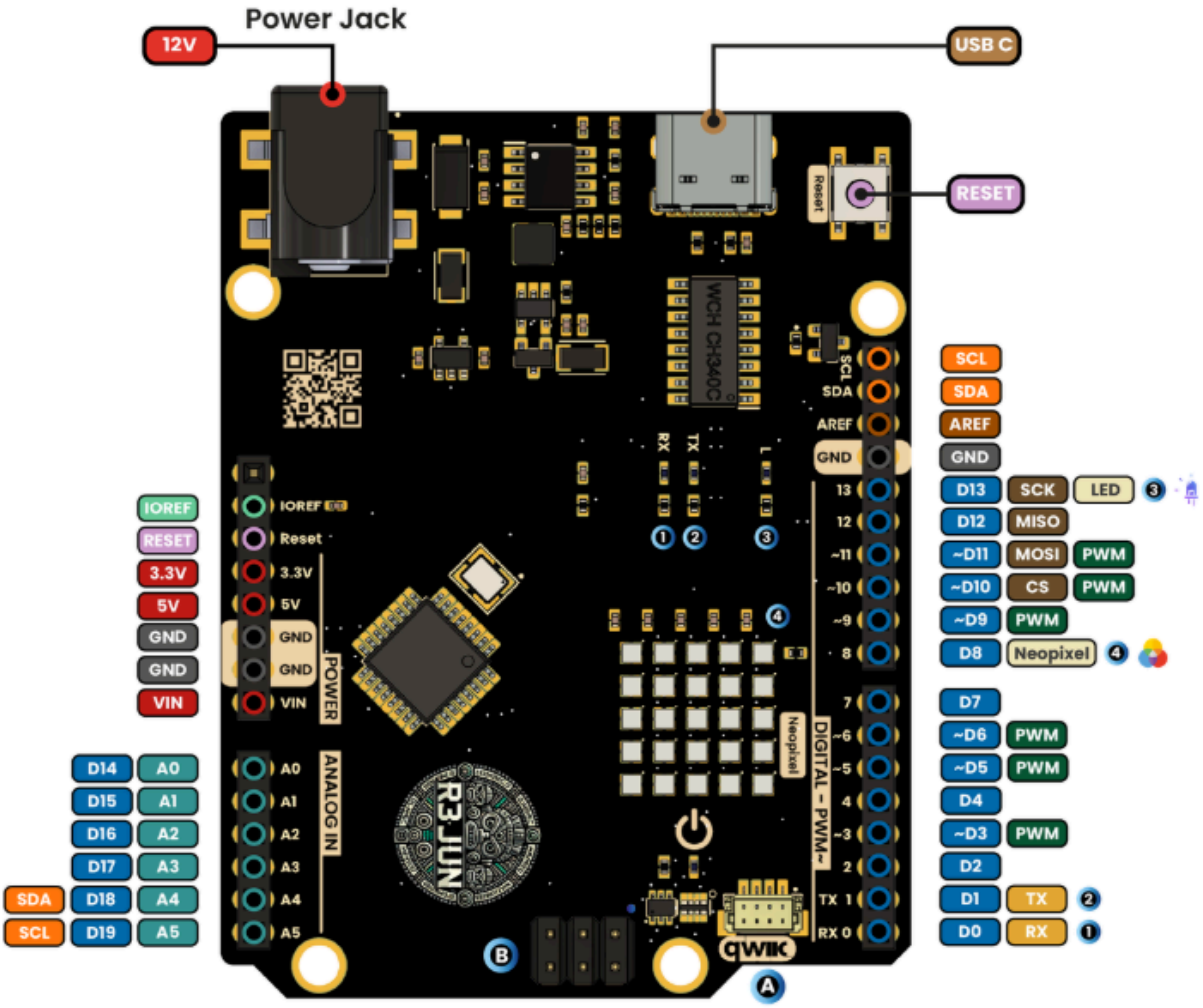

Digital I/O

All GPIOs of the ATmega328P are accessible through standard Arduino headers and support general-purpose I/O, PWM, interrupts, and communication interfaces.

- UART: D0 (RX), D1 (TX)
- SPI: D10 (SS), D11 (MOSI), D12 (MISO), D13 (SCK)
- NeoPixel Control: D8
- Onboard LED: D13

Arduino Pin	Port Pin	Functionality
D0	PD0	UART RX
D1	PD1	UART TX
D2	PD2	Digital I/O, External Interrupt (INT0)
D3	PD3	Digital I/O, PWM, External Interrupt (INT1)
D4	PD4	Digital I/O
D5	PD5	Digital I/O, PWM

D6	PD6	Digital I/O, PWM
D7	PD7	Digital I/O
D8	PB0	Digital I/O
D9	PB1	Digital I/O, PWM
D10	PB2	Digital I/O, PWM, SS (SPI)
D11	PB3	Digital I/O, PWM, MOSI (SPI)
D12	PB4	Digital I/O, MISO (SPI)
D13	PB5	Digital I/O, SCK (SPI), Onboard LED

Analog Inputs

The board provides 10-bit ADC channels for analog signal acquisition. The I²C interface shares pins with analog inputs.

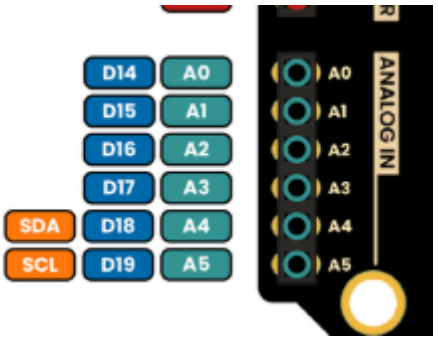

Arduino Pin	Port Pin	Functionality
A0	PC0	ADC0
A1	PC1	ADC1
A2	PC2	ADC2
A3	PC3	ADC3
A4	PC4	ADC4, SDA (I²C)
A5	PC5	ADC5, SCL (I²C)

SPI Pins

The SPI interface is available both on digital pins and through the ICSP header for full compatibility with shields and programming tools.

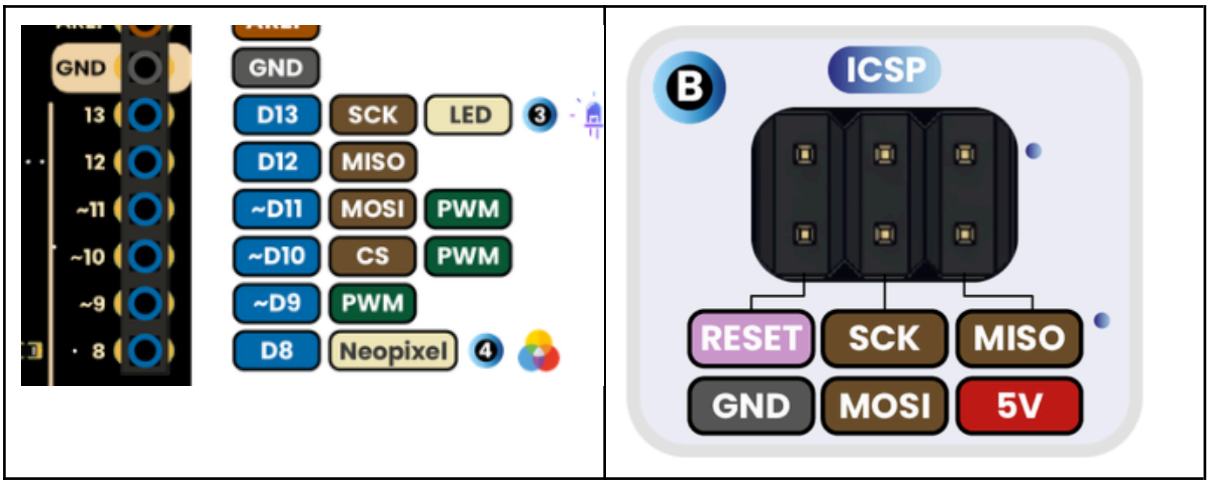

- Signals: MISO, MOSI, SCK, RESET, 5V, GND
- Applications:
- In-system programming (ISP)
- External SPI peripherals
- Shield compatibility

Arduino Pin	Port Pin	SPI Role
D10	PB2	SS
D11	PB3	MOSI
D12	PB4	MISO
D13	PB5	SCK

Note: SPI signals are also available via the ICSP header.

I2C Pins – JST Connector

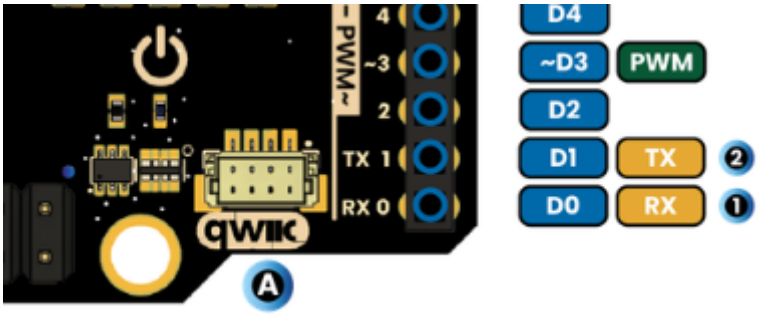

The board provides a dedicated connector for simplified I²C expansion.

- Connector: JST 1.0 mm, 4-pin
- Signals: GND, 3.3V, SDA, SCL
- Mapping:
  - SDA → A4 (PC4)
  - SCL → A5 (PC5)

Arduino Pin	Port Pin	I²C Role
A4	PC4	SDA
A5	PC5	SCL

*Includes onboard **level shifting**, enabling safe operation between **3.3 V and 5 V devices** without external components.*

Note: The I²C interface is accessible both via standard pins and the JST connector.

Integrated Peripherals

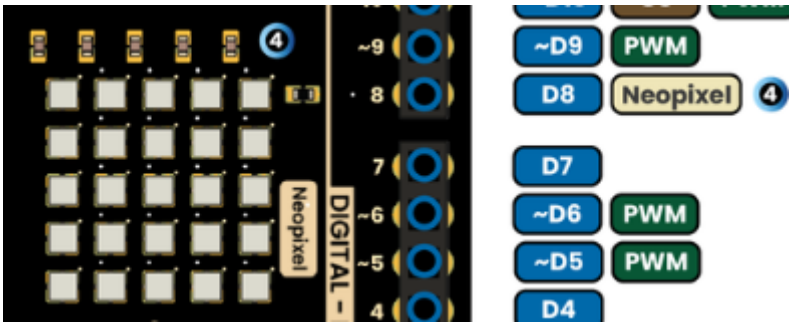

- **NeoPixel Matrix (5×5) connected** to D8, enabling control of 25 RGB LEDs using a single GPIO.
- **Onboard LED connected** to D13 for status and debugging.
- **Reset Button: Manual** reset and auto-reset during programming.

Signal Compatibility

- Digital I/O: 5 V logic
- I²C: 3.3 V / 5 V via level shifting
- Analog: Referenced to VCC or AREF

Board Topology

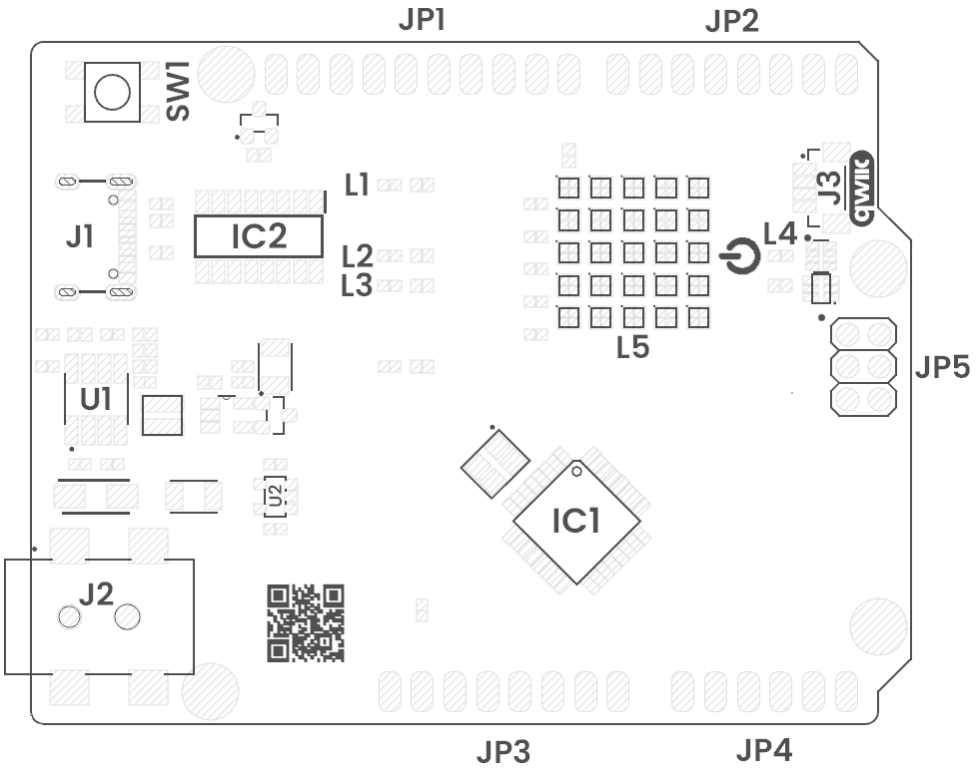

Ref.	Description
IC1	ATMEGA 328P Microcontroller
IC2	CH340 USB to Serial Controller
U1	MP1482 5V Step-Down Regulator
U2	AP2112K 3.3V Regulator
SW1	Reset Push Button
L1	Built-In LED
L2	Tx LED
L3	Rx LED
L4	Power On LED
L5	Neopixel Matrix
J1	USB Type-C Connector
J2	5mm DC Barrel Power Jack
J3	QWIIC Connector (JST 1mm)
JP1	Header for GPIOs
JP2	Header for GPIOs
JP3	Header for Power Supply and System Functions
JP4	Header for GPIOs (Analog)
JP5	Header for GPIOs (SPI)

Block Diagram

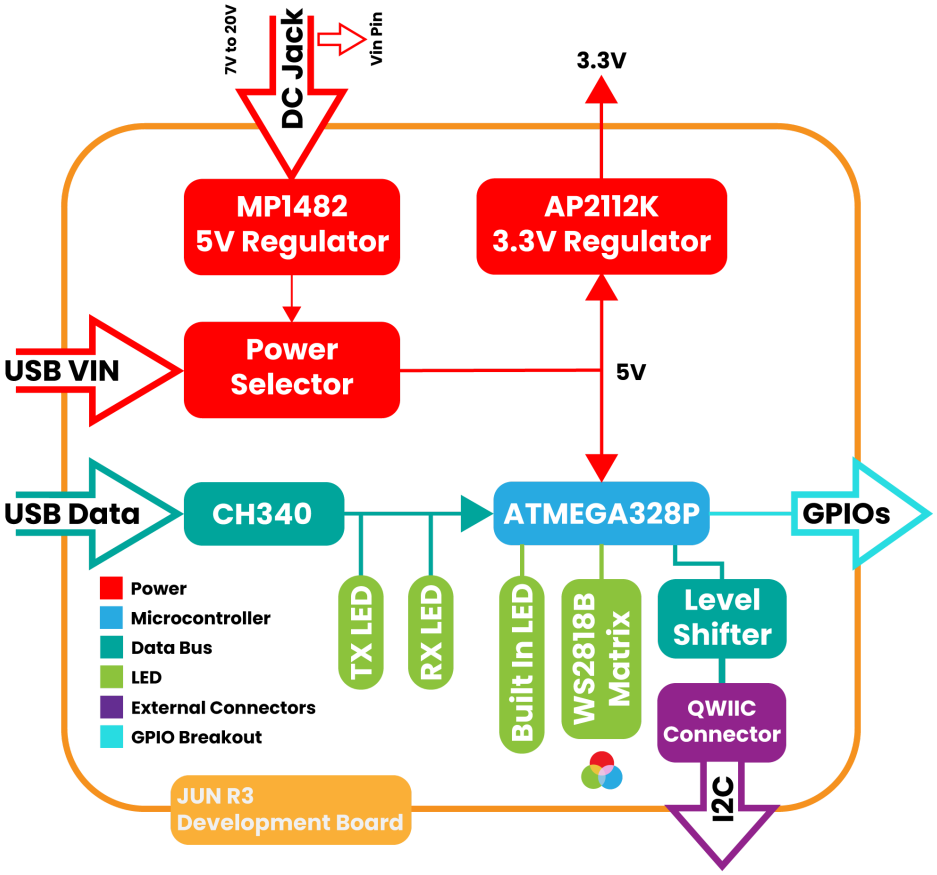

Block Diagram

Power Tree

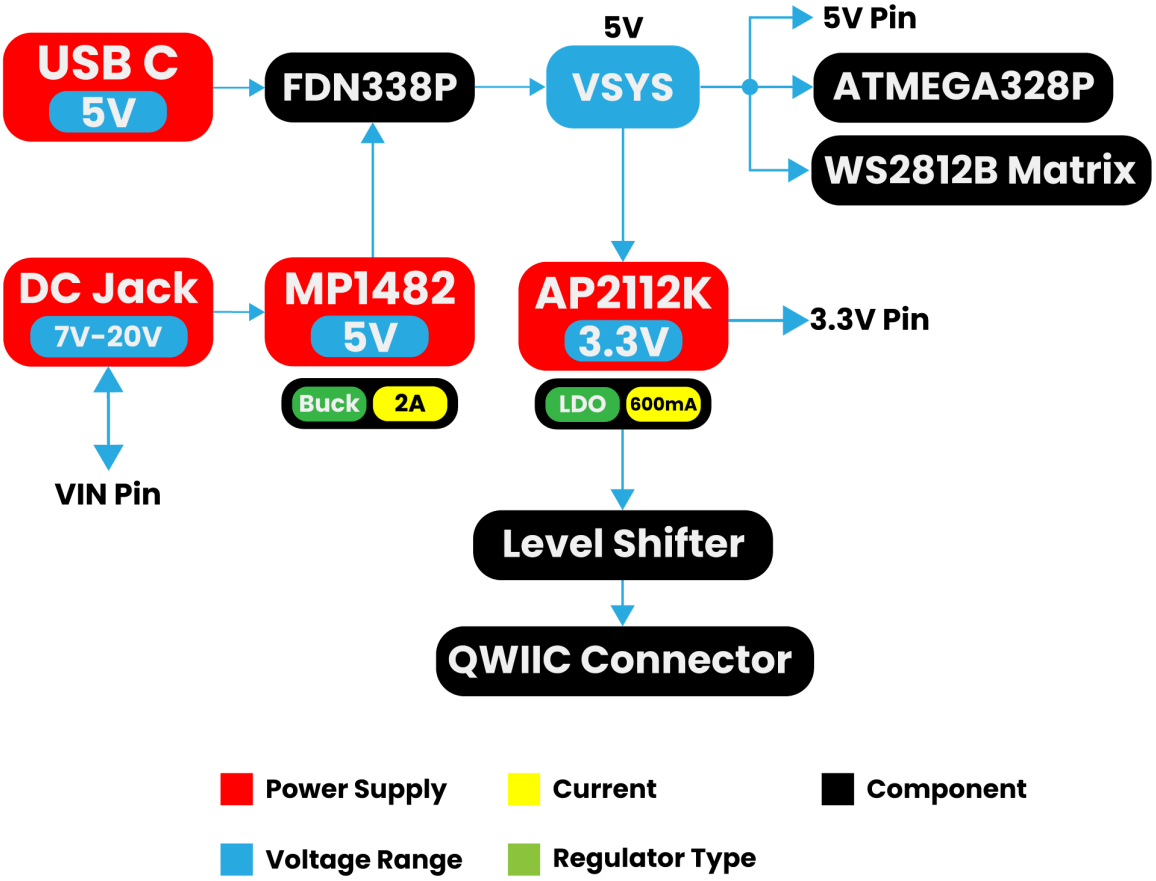
USB C
5V
FDN338P
5V
VSYS
5V Pin
ATMEGA328P
WS2812B Matrix
DC Jack
7V-20V
MP1482
5V
Buck
2A
AP2112K
3.3V
LDO
600mA
3.3V Pin
VIN Pin
Level Shifter
QWIIC Connector
Power Supply
Current
Component
Voltage Range
Regulator Type

4 Connectors & Pinouts

PINOUT
UNIT JUN R3

Top view

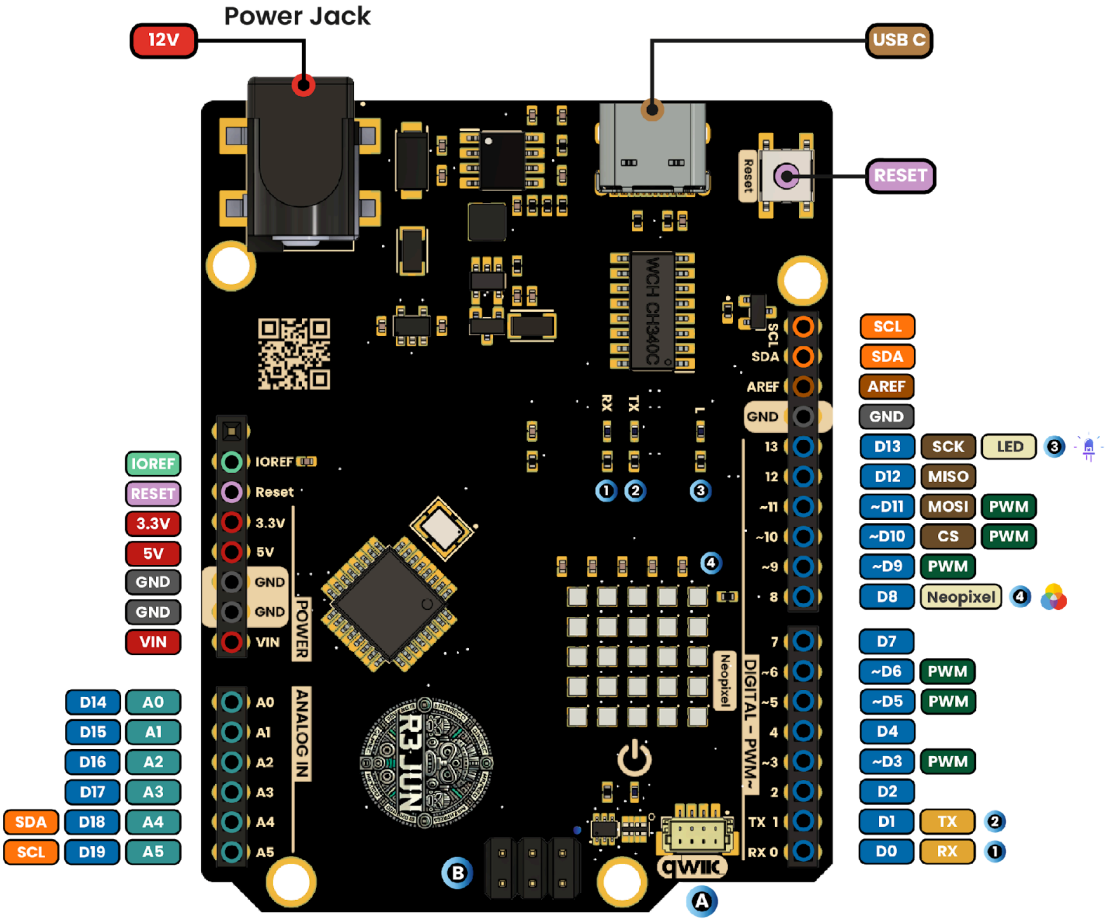

Description:

- VCC
- GND
- Reset
- Analog pins
- GPIO compatible with Arduino
- I2C
- UART
- SPI
- PWM
- Analog reference
- IO Reference
- RGB

Module General Pinout

Pin Distribution

Pin Label	Function / Notes
D0	RX – Serial Receive
D1	TX – Serial Transmit
D2	Digital I/O – Interrupt capable
D3	PWM – Pulse Width Modulation
D4	Digital I/O
D5	PWM – Pulse Width Modulation
D6	PWM – Pulse Width Modulation
D7	Digital I/O
D8	Digital I/O, Matrix 5x5 Pin Controller
D9	PWM – Pulse Width Modulation
D10	SPI CS – Chip Select
D11	SPI MOSI – Master Out Slave In
D12	SPI MISO – Master In Slave Out
D13	SPI SCK – Serial Clock
A0	Analog Input – 10-bit ADC
A1	Analog Input – 10-bit ADC
A2	Analog Input – 10-bit ADC
A3	Analog Input – 10-bit ADC
A4	I2C SDA – Serial Data Line
A5	I2C SCL – Serial Clock Line
VCC	Power Supply – 5V/3.3V (design)
GND	Ground – Common reference

5 Board Operations

5.1 Getting Started with Arduino IDE

The UNIT JUN R3 is fully compatible with the Arduino development environment and can be programmed using the standard Arduino UNO configuration.

Board Configuration

1. Connect the board to the computer using a USB-C cable
2. Open the Arduino IDE
3. Navigate to:
   `Tools → Board → Arduino UNO`
4. Select the corresponding serial port under:
   `Tools → Port`

Example Code

The following example demonstrates basic operation using the onboard LED (D13) and NeoPixel matrix (D8):

```
#include <Adafruit_NeoPixel.h>


#define LED_PIN 13

#define NEOPIXEL_PIN 8

#define NUM_PIXELS 25

Adafruit_NeoPixel matrix(NUM_PIXELS, NEOPIXEL_PIN, NEO_GRB +
NEO_KHZ800);

void setup() {

pinMode(LED_PIN, OUTPUT);

matrix.begin();

matrix.show();

}


void loop() {

// Toggle onboard LED
```

```
digitalWrite(LED_PIN, HIGH);


// Turn NeoPixels ON (white)
for (int i = 0; i < NUM_PIXELS; i++) {
  matrix.setPixelColor(i, matrix.Color(50, 50, 50));
}
matrix.show();
delay(500);
digitalWrite(LED_PIN, LOW);
// Turn NeoPixels OFF
matrix.clear();
matrix.show();
delay(500);
}
```

Code Operation

The firmware initializes the onboard LED and the NeoPixel matrix. During execution, the LED toggles on and off while the NeoPixel matrix alternates between illuminated and off states. This confirms correct operation of digital output and integrated peripherals.

6 Mechanical Information

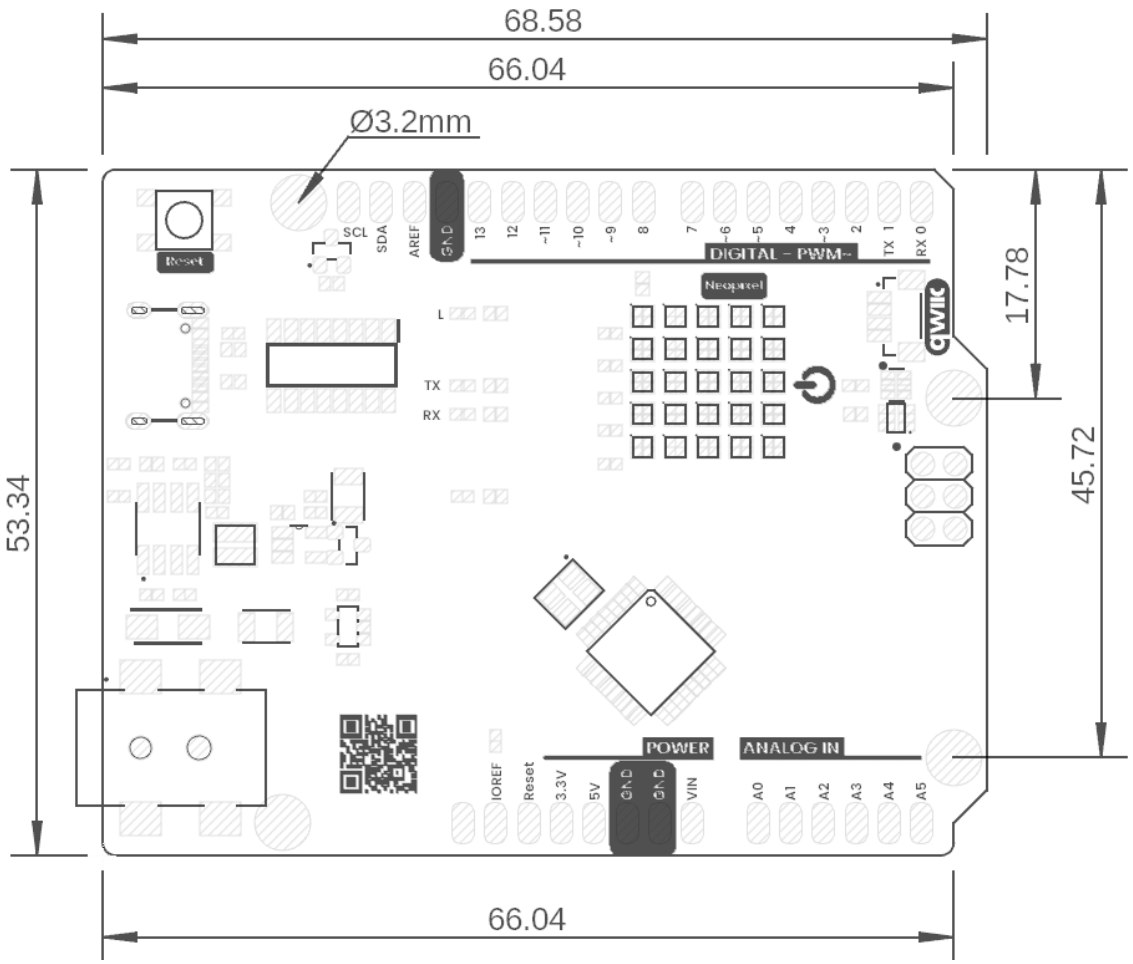

Mechanical dimensions in millimeters

7 Company Information

Company name	UNIT Electronics
Company website	https://uelectronics.com/
Company Address	Salvador 19, Cuauhtémoc, 06000 Mexico City, CDMX

8 Reference Documentation

Ref	Link
Wiki	https://wiki.uelectronics.com/wiki/jun-r3-development-board
Github - Documentation	https://github.com/UNIT-Electronics-MX/unit_jun_r3_development_board
Arduino IDE	https://www.arduino.cc/en/software
Visual Studio Code	https://code.visualstudio.com/download

9 Appendix 9.1 Schematic
(*https://github.com/UNIT-Electronics-MX/unit_jun_r3_development_board/blob/main/hardware/unit_sch_v_0_0_1_ue0081_Jun-R3.pdf*)

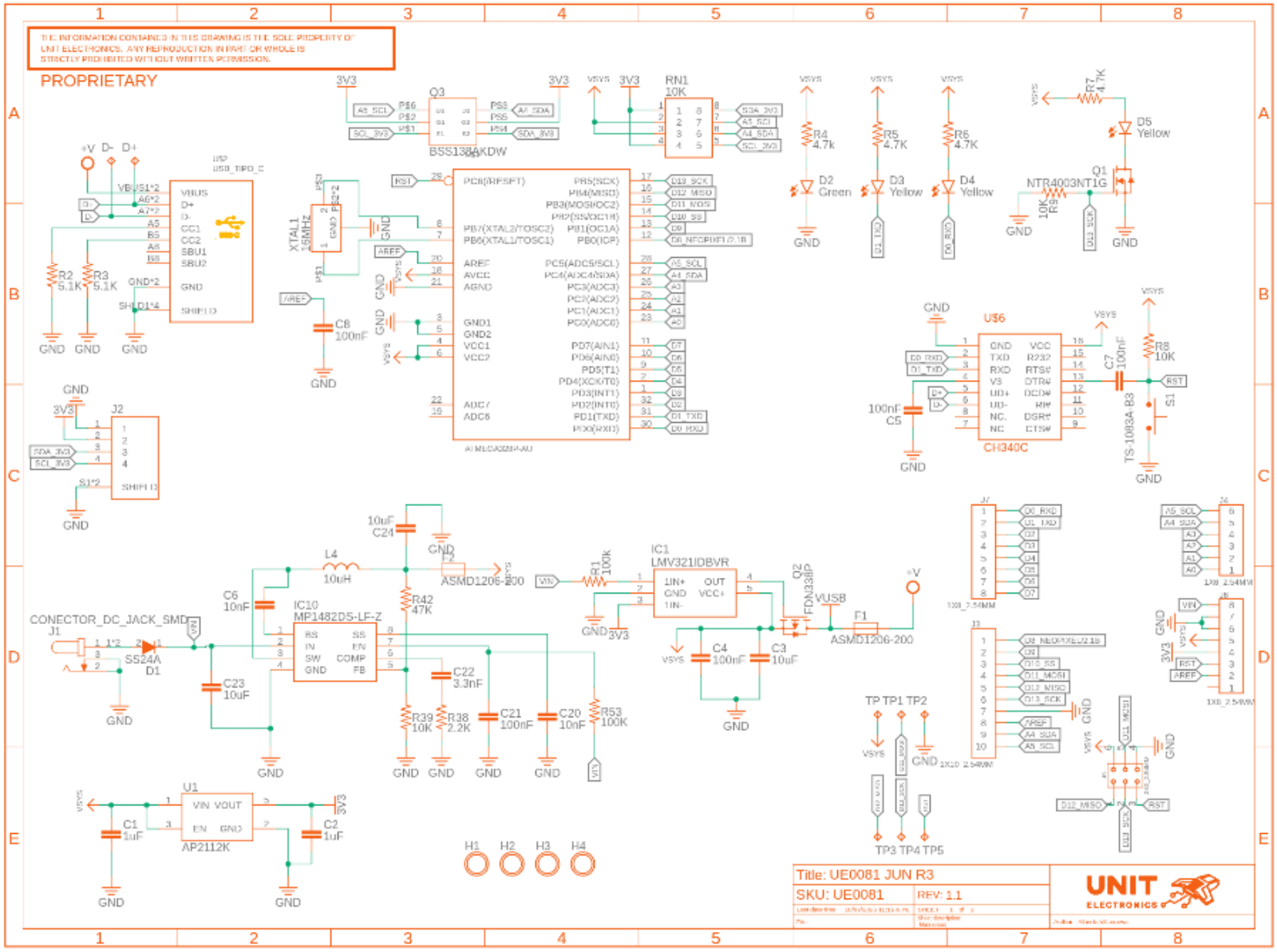
PROPRIETARY
Title: UE0081 JUN R3
SKU: UE0081
REV: 1.1
UNIT ELECTRONICS