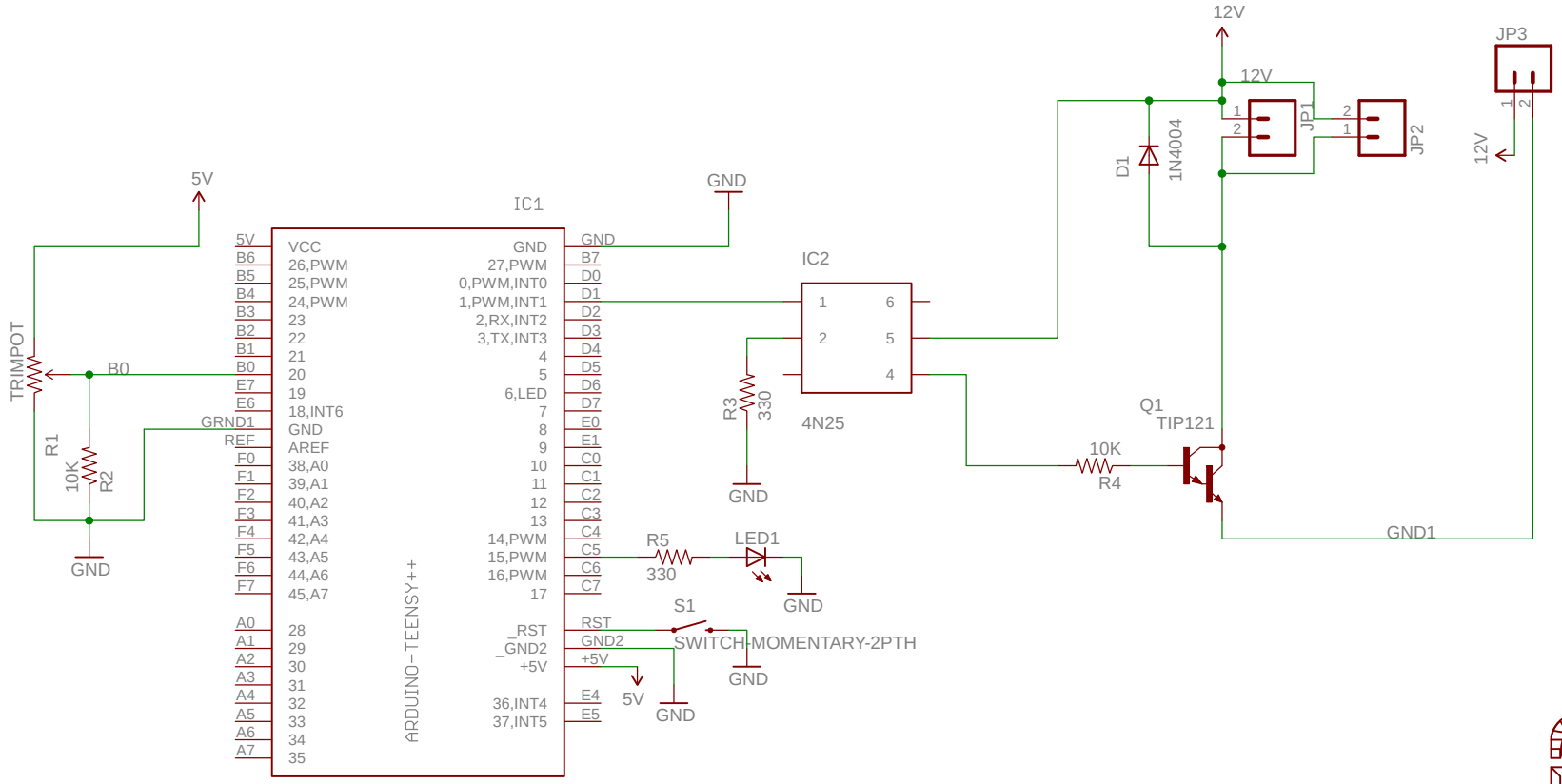

Pharotronix

TITLE: pwm_fan

Document Number:

REV:

Date: 10/24/2011 10:41:11 PM

Sheet: 1/1