Memory Mapped IO used for GPIO

Lecture 2

GPIO for RP2040

- Memory Mapped I/O
  - GPIO Peripheral
- Embedded Rust Stack
- embassy-rs

MMIO

Memory Mapped Input Output

8 bit processor

a simple 8 bit processor with a text display

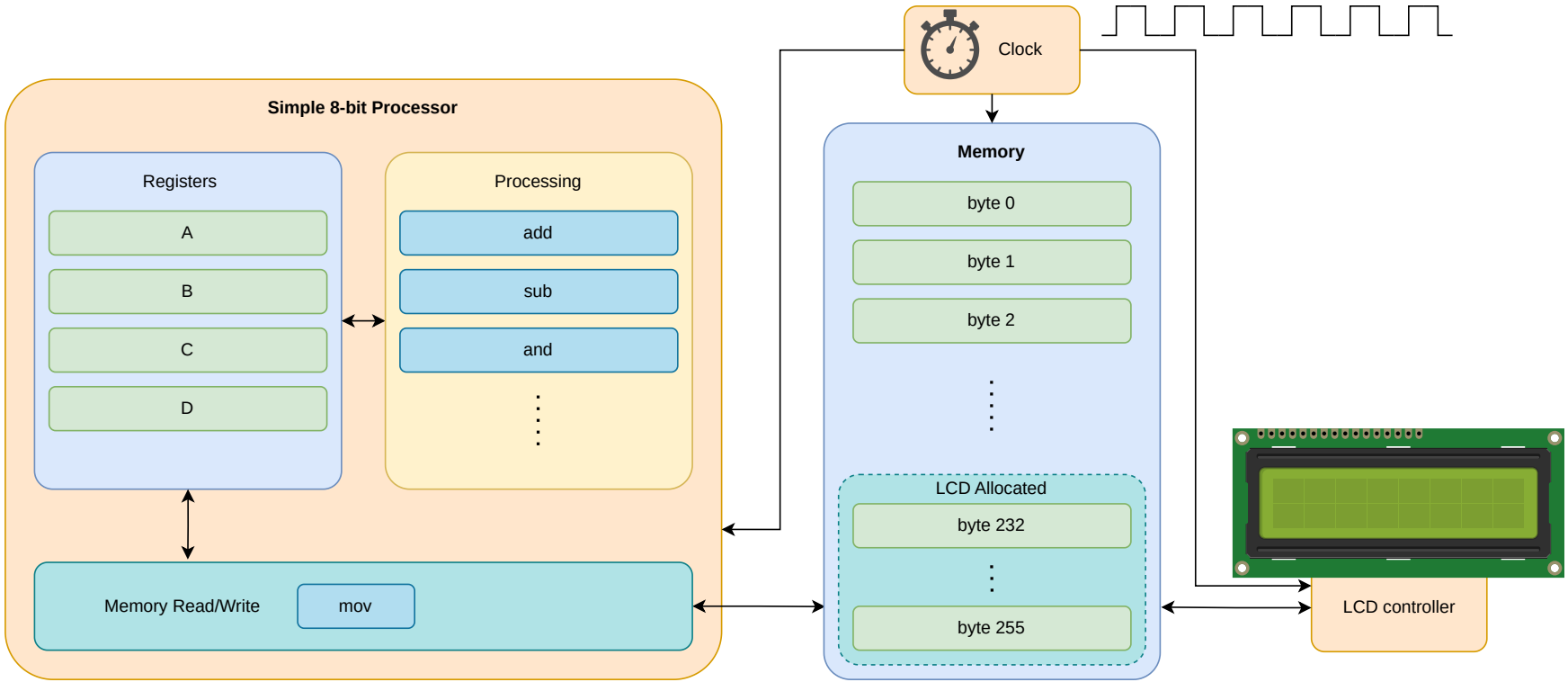

STM32L0x2

A real MCU

Cortex-M0+ Peripherals	MCU's *settings* and internal peripherals, available at the same address on all M0+
Peripherals	GPIO, USART, SPI, I2C, USB, etc
Flash	The storage space
SRAM	RAM memory
@0x0000_0000	Alias for SRAM or Flash

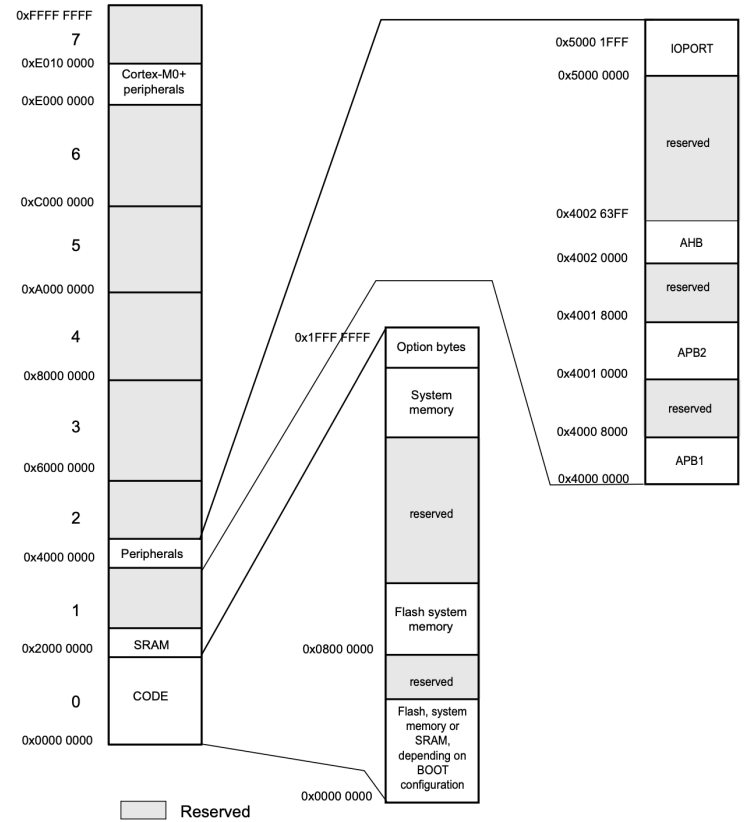

System Control Registers

@0xe000_0000

Compute the actual address

- 0xe000_0000 + Offset

Examples:

- SYST_CSR: **0xe000_e010** (*0xe000_0000 + 0xe010*)
- CPUID: **0xe000_ed00** (*0xe000_0000 + 0xed00*)

```
const SYS_CTRL: usize = 0xe000_0000;
const CPUID: usize = 0xed00;

let cpuid_reg = (SYS_CTRL + CPUID) as *const u32;
let cpuid_value = unsafe { *cpuid_reg };
// or
let cpuid_value = unsafe { cpuid_reg.read() };
```

⚠ Compilers optimize code and processors use cache!

Offset	Name	Info
0xe010	SYST_CSR	SysTick Control and Status Register
0xe014	SYST_RVR	SysTick Reload Value Register
0xe018	SYST_CVR	SysTick Current Value Register
0xe01c	SYST_CALIB	SysTick Calibration Value Register
0xe100	NVIC_ISER	Interrupt Set-Enable Register
0xe180	NVIC_ICER	Interrupt Clear-Enable Register
0xe200	NVIC_ISPR	Interrupt Set-Pending Register
0xe280	NVIC_ICPR	Interrupt Clear-Pending Register
0xe400	NVIC_IPR0	Interrupt Priority Register 0
0xe404	NVIC_IPR1	Interrupt Priority Register 1
0xe408	NVIC_IPR2	Interrupt Priority Register 2
0xe40c	NVIC_IPR3	Interrupt Priority Register 3
0xe410	NVIC_IPR4	Interrupt Priority Register 4
0xe414	NVIC_IPR5	Interrupt Priority Register 5
0xe418	NVIC_IPR6	Interrupt Priority Register 6
0xe41c	NVIC_IPR7	Interrupt Priority Register 7
0xed00	CPUID	CPUID Base Register
0xed04	ICSR	Interrupt Control and State Register
0xed08	VTOR	Vector Table Offset Register
0xed0c	AIRCR	Application Interrupt and Reset Control Register
0xed10	SCR	System Control Register
0xed14	CCR	Configuration and Control Register

Compiler Optimization

compilers optimize code

Write bytes to the `UART` (serial port) data register

```
// we use mut as we need to write to it
const UART_TX: *mut u8 = 0x400_3400;
// b".." means ASCII string (Rust uses UTF-8 strings by default)
for character in b"Hello, World".iter() {
  // character is &char, so we use *character to get the value
  unsafe { UART_TX.write(*character); }
}
```

1. The compiler does not know that `UART_TX` is a register and uses it as a memory address.
2. Writing several values to the same memory address will result in having the last value stored at that address.
3. The compiler optimizes the code write the value

```
const UART_TX: *mut u8 = 0x400_3400;
unsafe { UART_TX.write(b'd'); }
```

No Compiler Optimization

CPUID: **0xe000_ed00** (*0xe000_0000* + *0xed00*)

```rust
use core::ptr::read_volatile;

const SYS_CTRL: usize = 0xe000_0000;
const CPUID: usize = 0xed00;

let cpuid_reg = (SYS_CTRL + CPUID) as *const u32;
unsafe {
    read_volatile(cpuid_reg) // avoid cache
}
```

`read_volatile`, `write_volatile`	**no** compiler **optimization**
`read`, `write`, `*p`	**use** compiler **optimization**

Offset	Name	Info
0xe010	SYST_CSR	SysTick Control and Status Register
0xe014	SYST_RVR	SysTick Reload Value Register
0xe018	SYST_CVR	SysTick Current Value Register
0xe01c	SYST_CALIB	SysTick Calibration Value Register
0xe100	NVIC_ISER	Interrupt Set-Enable Register
0xe180	NVIC_ICER	Interrupt Clear-Enable Register
0xe200	NVIC_ISPR	Interrupt Set-Pending Register
0xe280	NVIC_ICPR	Interrupt Clear-Pending Register
0xe400	NVIC_IPR0	Interrupt Priority Register 0
0xe404	NVIC_IPR1	Interrupt Priority Register 1
0xe408	NVIC_IPR2	Interrupt Priority Register 2
0xe40c	NVIC_IPR3	Interrupt Priority Register 3
0xe410	NVIC_IPR4	Interrupt Priority Register 4
0xe414	NVIC_IPR5	Interrupt Priority Register 5
0xe418	NVIC_IPR6	Interrupt Priority Register 6
0xe41c	NVIC_IPR7	Interrupt Priority Register 7
0xed00	CPUID	CPUID Base Register
0xed04	ICSR	Interrupt Control and State Register
0xed08	VTOR	Vector Table Offset Register
0xed0c	AIRCR	Application Interrupt and Reset Control Register
0xed10	SCR	System Control Register
0xed14	CCR	Configuration and Control Register

No Compiler Optimization

Write bytes to the `UART` (serial port) data register

```rust
use core::ptr::write_volatile;

// we use mut as we need to write to it
const UART_TX: *mut u8 = 0x400_3400;
// b".." means ASCII string (Rust uses UTF-8 strings by default)
for character in b"Hello, World".iter() {
  // character is &char, so we use *character to get the value
  unsafe { write_volatile(UART_TX, *character); }
}
```

The compiler **knows** that `UART_TX` **must be written** every time.

8 bit processor

with cache

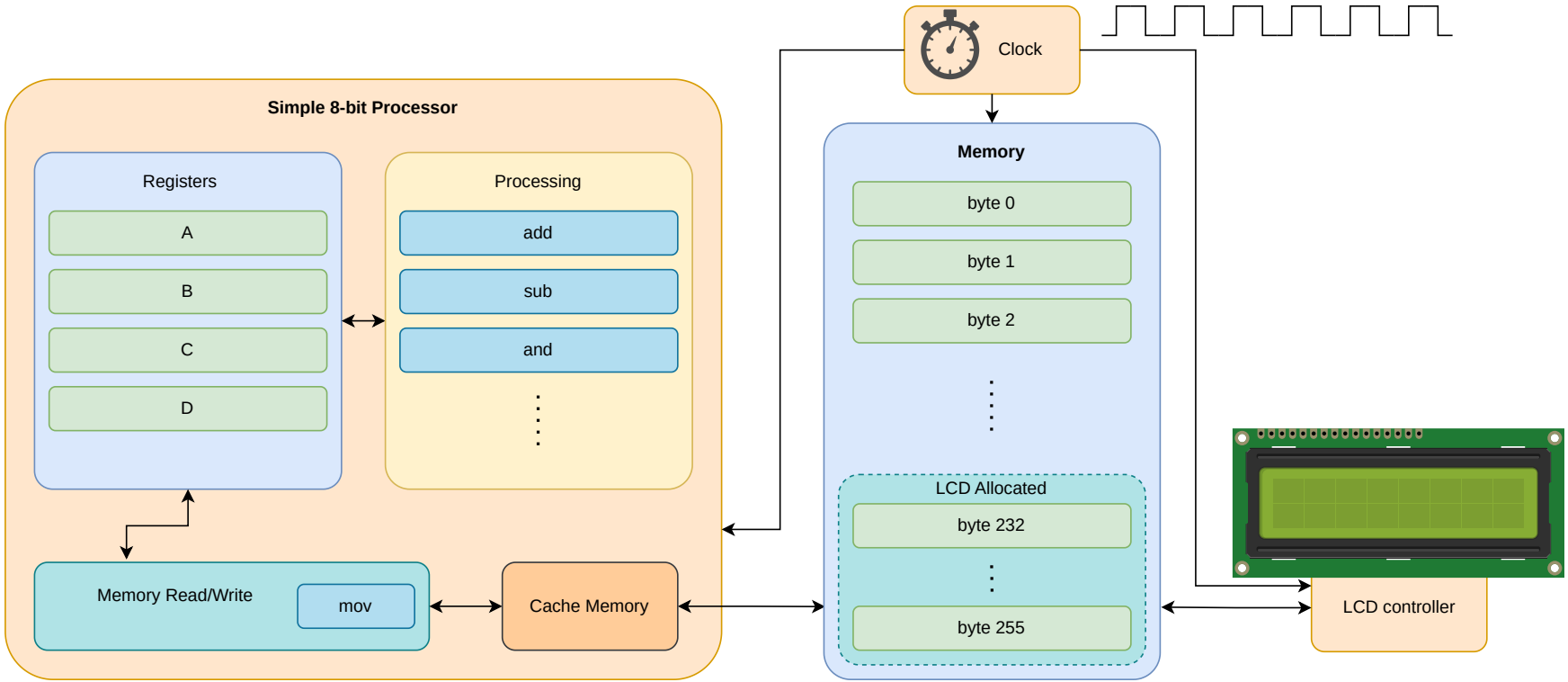

No Cache or Flush Cache

- Cache types:
  - *write-through* - data is written to the cache and to the main memory (bus)
  - *write-back* - data is written to the cache and later to the main memory (bus)
- few Cortex-M MCUs have cache
- the Memory Mapped I/O region is set as *nocache*
- for chips that use cache
  - *nocache* regions have to be set manually (if MCU knows)
  - or, the cache has to be flushed before a `volatile_read` and after a `volatile_write`
  - beware DMA controllers that can't see the cache contents

Read the CPUID

About the MCU

```rust
use core::ptr::read_volatile;

const SYS_CTRL: usize = 0xe000_0000;
const CPUID: usize = 0xed00;

let cpuid_reg = (SYS_CTRL + CPUID) as *const u32;
let cpuid_value = unsafe {
    read_volatile(cpuid_reg)
};

// shift right 24 bits and keep only the last 8 bits
let variant = (cpuid_value >> 24) & 0b1111_1111;

// shift right 16 bits and keep only the last 4 bits
let architecture = (cpuid_value >> 16) & 0b1111;

// shift right 4 bits and keep only the last 12 bits
let part_no = (cpuid_value >> 4) & 0b11_1111_1111;

// shift right 0 bits and keep only the last 4 bits
let revision = (cpuid_value >> 0) & 0b1111;
```

CPUID Register

Offset: 0xed04

Bits	Name	Description	Type	Reset
31:24	IMPLEMENTER	Implementor code: 0x41 = ARM	RO	0x41
23:20	VARIANT	Major revision number n in the rnpm revision status: 0x0 = Revision 0.	RO	0x0
19:16	ARCHITECTURE	Constant that defines the architecture of the processor: 0xC = ARMv6-M architecture.	RO	0xc
15:4	PARTNO	Number of processor within family: 0xC60 = Cortex-M0+	RO	0xc60
3:0	REVISION	Minor revision number m in the rnpm revision status: 0x1 = Patch 1.	RO	0x1

AIRCR

Application Interrupt and Reset Control Register

```rust
use core::ptr::read_volatile;
use core::ptr::write_volatile;

const SYS_CTRL: usize = 0xe000_0000;
const AIRCR: usize = 0xed0c;

const VECTKEY: u32 = 16;
const SYSRESETREQ: u32 = 2;

let aircr_register = (SYS_CTRL + AIRCR) as *mut u32;
let mut aircr_value = unsafe {
    read_volatile(aircr_register)
};

aircr_value = aircr_value & ~(0x1111 << VECTKEY);
aircr_value = aircr_value | (0x05fa << VECTKEY);
aircr_value = aircr_value | (1 << SYSRESETREQ);

unsafe {
    write_volatile(aircr_register, aircr_value);
}
```

AIRCR Register

Offset: 0xed0c

Bits	Name	Description	Type	Reset
31:16	VECTKEY	Register key: Reads as Unknown On writes, write 0x05FA to VECTKEY, otherwise the write is ignored.	RW	0x0000
15	ENDIANESS	Data endianness implemented: 0 = Little-endian.	RO	0x0
14:3	Reserved.	-	-	-

Bits	Name	Description	Type	Reset
2	SYSRESETREQ	Writing 1 to this bit causes the SYSRESETREQ signal to the outer system to be asserted to request a reset. The intention is to force a large system reset of all major components except for debug. The C_HALT bit in the DHCSR is cleared as a result of the system reset requested. The debugger does not lose contact with the device.	RW	0x0
1	VECTCLRACTIVE	Clears all active state information for fixed and configurable exceptions. This bit: is self-clearing, can only be set by the DAP when the core is halted. When set: clears all active exception status of the processor, forces a return to Thread mode, forces an IPSR of 0. A debugger must re-initialize the stack.	RW	0x0
0	Reserved.	-	-	-

Read and Write

they do stuff

- Read
  - reads the value of a register
  - might ask the peripheral to do something
- Write
  - writes the value to a register
  - might ask the peripheral to do something
    - SYSRESETREQ

AIRCR Register

Offset: 0xed0c

Bits	Name	Description	Type	Reset
31:16	VECTKEY	Register key: Reads as Unknown On writes, write 0x05FA to VECTKEY, otherwise the write is ignored.	RW	0x0000
15	ENDIANESS	Data endianness implemented: 0 = Little-endian.	RO	0x0
14:3	Reserved.	-	-	-

Bits	Name	Description	Type	Reset
2	SYSRESETREQ	Writing 1 to this bit causes the SYSRESETREQ signal to the outer system to be asserted to request a reset. The intention is to force a large system reset of all major components except for debug. The C_HALT bit in the DHCSR is cleared as a result of the system reset requested. The debugger does not lose contact with the device.	RW	0x0
1	VECTCLRACTIVE	Clears all active state information for fixed and configurable exceptions. This bit: is self-clearing, can only be set by the DAP when the core is halted. When set: clears all active exception status of the processor, forces a return to Thread mode, forces an IPSR of 0. A debugger must re-initialize the stack.	RW	0x0
0	Reserved.	-	-	-

SVD XML File

System View Description

```xml
<device schemaVersion="1.1"
  xmlns:xs="http://www.w3.org/2001/XMLSchema-instance" xs:noNamespaceSchemaLocation="CMSIS-SVD.xsd">
  <name>RP2040</name>
  <peripherals>
    <name>PPB</name>
    <baseAddress>0xe0000000</baseAddress>
    <register>
      <name>CPUID</name>
      <addressOffset>0xed00</addressOffset>
      <resetValue>0x410cc601</resetValue>
      <fields>
        <field>
          <name>IMPLEMENTER</name>
          <description>Implementor code: 0x41 = ARM</description>
          <bitRange>[31:24]</bitRange>
          <access>read-only</access>
        </field>
        <!-- rest of the fields of the register -->
      </fields>
    </register>
  </peripherals>
</device>
```

Bitwise Ops

How to set and clear bits

Set bit

set the `1` on position `bit` of `register`

```
fn set_bit(register: usize, bit: u8) -> usize {
    // assume register is 0b1000, bit is 2
    //   1 << 2 is 0b0100
    //   0b1000 | 0b0100 is 0b1100
    register | 1 << bit
}
```

Set multiple bits

```
fn set_bits(register: usize, bits: usize) -> usize {
    // assume register is 0b1000, bits is 0b0111
    //   0b1000 | 0b0111 is 0b1111
    register | bits
}
```

Clear bit

Set the `0` on position `bit` of `register`

```
fn clear_bit(register: usize, bit: u8) -> usize {
    // assume register is 0b1100, bit is 2
    //   1 << 2 is 0b0100
    //   !(1 << 3) is 0b1011
    //   0b1100 & 0b1011 is 0b1000
    register & !(1 << bit)
}
```

Clear multiple bits

```
fn clear_bits(register: usize, bits: usize) -> usize {
    // assume register is 0b1111, bits is 0b0111
    //   !bits = 0b1000
    //   0b1111 & 0b1000 is 0b1000
    register & !bits
}
```

Flip bit

Flip the bit on position `bit` of `register`

```
fn flip_bit(register: usize, bit: u8) -> usize {
    // assume register is 0b1000, bit is 2
    //   1 << 2 is 0b0100
    //   0b1100 ^ 0b0100 is 0b1000
    register ^ 1 << bit
}
```

Flip multiple bits

```
fn flip_bits(register: usize, bits: usize) -> usize {
    // assume register is 0b1000, bits is 0b0111
    //   0b1000 ^ 0b0111 is 0b1111
    register ^ bits
}
```

Let’s see a combined operation for value extraction

- We presume an 32 bits ID = `0b1100_1010_1111_1100_0000_1111_0110_1101`
- And want to extract a portion `0b`**`1100_1010_1111`**`_1100_0000_1111_0110_1101`

```rust
const MASK: u32 = 0b0000_0000_0000_0000_0000_1111_1111_1111;

fn print_binary(label: &str, num: u32) {
    println!("{}: {:032b}", label, num);
}

fn main() {
    let large_id: u32 = 0b1100_1010_1111_1100_0000_1111_0110_1101;
    let extracted_bits = (large_id >> 20) & MASK;

   // Print values in binary
    print_binary("Original_", large_id);
    print_binary("Mask_____", MASK);
    print_binary("Extracted", extracted_bits);
}
/* RESULT
Original_: 11001010111111000000111101101101
Mask_____: 00000000000000000000111111111111
Extracted: 00000000000000000000110010101111 */
```

With nice formating

```
1   const MASK: u32 = 0b0000_0000_0000_0000_0000_1111_1111_1111;
2   fn format_binary(num: u32) -> String {
3       (0..32).rev()
4           .map(|i| {
5               if i != 0 && i % 4 == 0 {
6                   format!("{}_", (num >> i) & 1)
7               } else {
8                   format!("{}", (num >> i) & 1)
9               }
10          })
11          .collect::<Vec<_>>()
12          .join("")
13  }
14  fn print_binary(label: &str, num: u32) { println!("{}: {}", label, format_binary(num));}
15  fn main() {
16      let large_id: u32 = 0b1100_1010_1111_1100_0000_1111_0110_1101;
17      let extracted_bits = (large_id >> 20) & MASK;
18      print_binary("Original_", large_id);
19      print_binary("Extracted", extracted_bits);
20  }
21  /* RESULTS:
22  Original_: 1100_1010_1111_1100_0000_1111_0110_1101
23  Extracted: 0000_0000_0000_0000_0000_1100_1010_1111 */
```

Bitwise Ops - in C

Set the `1` on position `bit` of `register` in C

```c
unsigned int set_bit(unsigned int register_value, unsigned char bit) {
    // assume register_value is 0b1000, bit is 2
    //   1 << 2 is 0b0100
    //   0b1000 | 0b0100 is 0b1100
    return register_value | (1 << bit);
}
```

Set multiple bits

```c
unsigned int set_bits(unsigned int register_value, unsigned int bits) {
    // assume register_value is 0b1000, bits is 0b0111
    //   0b1000 | 0b0111 is 0b1111
    return register_value | bits;
}
```

(test code)

```c
#include <stdio.h>

void print_binary(unsigned int num) {
    for (int i = sizeof(num) * 8 - 1; i >= 0; i--) {
        printf("%c", (num & (1 << i)) ? '1' : '0');
    }
    printf("\n"); //prints "num" number in binary format
}

unsigned int set_bits(unsigned int register_value, unsigned int bits) {
    return register_value | bits;
}

int main() {
    unsigned int reg = 0b1000;
    unsigned int bits_to_set = 0b0011;

    unsigned int result = set_bits(reg, bits_to_set);

    printf("Register before: ");    print_binary(reg);
    printf("Bits to set:     ");    print_binary(bits_to_set);
    printf("Result after:    ");    print_binary(result);
    return 0;
}
```

Combined operation for value extraction in C

```c
#include <stdio.h>
void print_binary(const char *label, unsigned int num) {
    printf("%s: ", label);
    for (int i = 31; i >= 0; i--) {
        printf("%c", (num & (1 << i)) ? '1' : '0');
    }
    printf("\n");
}

int main() {
    unsigned int large_id = 0b11001010111110000001111101101101;
    unsigned int mask = 0b00000000000000000000111111111111;
    unsigned int extracted_bits = (large_id >> 20) & mask;

    print_binary("Original_", large_id);
    print_binary("Mask_____", mask);
    print_binary("Extracted", extracted_bits);

    return 0;
}
//RESULT
//Original_: 11001010111110000001111101101101
//Mask_____: 00000000000000000000111111111111
//Extracted: 00000000000000000000110010101111
```

With nice formating

```c
#include <stdio.h>
void print_binary(const char *label, unsigned int num) {
    printf("%s: ", label);
    for (int i = 31; i >= 0; i--) {
        printf("%c", (num & (1 << i)) ? '1' : '0');
    if (i % 4 == 0 && i != 0) { printf("_"); }
    }
    printf("\n");
}
int main() {
    unsigned int large_id = 0b11001010111111000000111101101101;
    unsigned int mask = 0b00000000000000000000111111111111;
    unsigned int extracted_bits = (large_id >> 20) & mask;

 print_binary("Original_", large_id);
    print_binary("Mask_____", mask);
    print_binary("Extracted", extracted_bits);

    return 0;
}
//RESULTS
//Original_: 1100_1010_1111_1100_0000_1111_0110_1101
//Mask_____: 0000_0000_0000_0000_0000_1111_1111_1111
//Extracted: 0000_0000_0000_0000_0000_1100_1010_1111
```

GPIO

General Purpose Input Output for RP2040

Bibliography

for this section

Raspberry Pi Ltd, *RP2040 Datasheet*

- Chapter 2 - *System Description*
  - Section 2.3 - *Processor subsystem*
    - Subsection 2.3.1 - *SIO*
      - Subsection 2.3.1.2 - *GPIO Control*
  - Section 2.4 - *Cortex-M0+* (except NVIC and MPU)
  - Section 2.19 - *GPIO* (except Interrupts)

GPIO

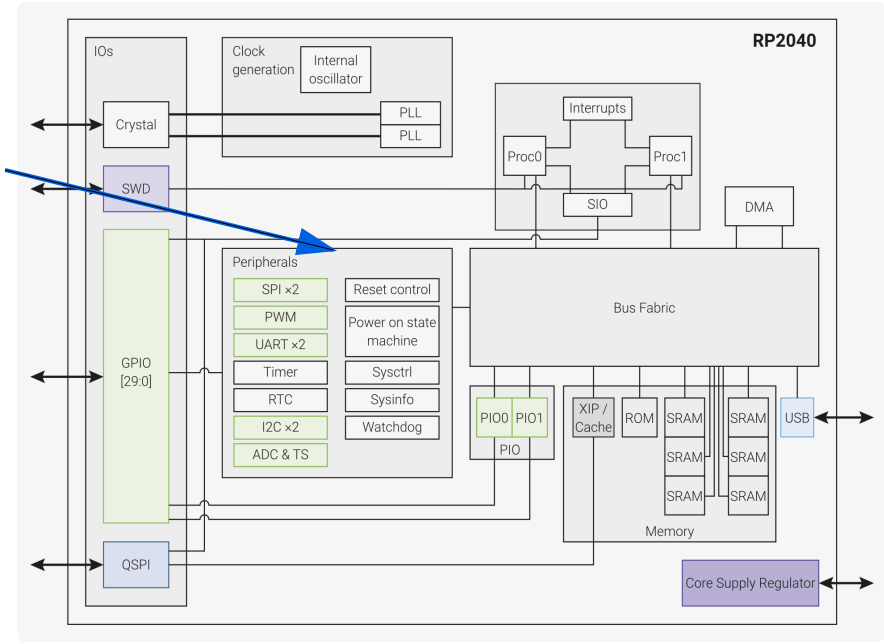

IO Bank (GPIO): Use the correct MUX function (F5)
SIO: Set the pin as Input or Output

Peripherals

SIO	Single Cycle Input/Output, is able to control the GPIO pins
GPIO	Multiplexes the functions of the GPIO pins

SIO Registers

The SIO registers start at a base address of `0xd0000000` (defined as SIO_BASE in SDK).

Offset	Name	Info
0x000	CPUID	Processor core identifier
0x004	GPIO_IN	Input value for GPIO pins
0x008	GPIO_HI_IN	Input value for QSPI pins
0x010	GPIO_OUT	GPIO output value
0x014	GPIO_OUT_SET	GPIO output value set
0x018	GPIO_OUT_CLR	GPIO output value clear
0x01c	GPIO_OUT_XOR	GPIO output value XOR
0x020	GPIO_OE	GPIO output enable
0x024	GPIO_OE_SET	GPIO output enable set
0x028	GPIO_OE_CLR	GPIO output enable clear

- Input
  - set GPIO_OE bit x to 0
  - read GPIO_IN bit x
- Ouput
  - set GPIO_OE bit x to 1
  - write GPIO_OUT bit x

GPIO_OE

Bits	Description	Type	Reset
31:30	Reserved.	-	-
29:0	Set output enable (1/0 → output/input) for GPIO0...29. Reading back gives the last value written. If core 0 and core 1 both write to GPIO_OE simultaneously (or to a SET/CLR/XOR alias), the result is as though the write from core 0 took place first, and the write from core 1 was then applied to that intermediate result.	RW	0x00000000

GPIO_IN

Bits	Description	Type	Reset
31:30	Reserved.	-	-
29:0	Input value for GPIO0...29	RO	0x00000000

GPIO_OUT

Bits	Description	Type	Reset
31:30	Reserved.	-	-
29:0	Set output level (1/0 → high/low) for GPIO0...29. Reading back gives the last value written, NOT the input value from the pins. If core 0 and core 1 both write to GPIO_OUT simultaneously (or to a SET/CLR/XOR alias), the result is as though the write from core 0 took place first, and the write from core 1 was then applied to that intermediate result.	RW	0x00000000

SIO Input

The SIO registers start at a base address of `0xd0000000` (defined as SIO_BASE in SDK).

Offset	Name	Info
0x000	CPUID	Processor core identifier
0x004	GPIO_IN	Input value for GPIO pins
0x008	GPIO_HI_IN	Input value for QSPI pins
0x010	GPIO_OUT	GPIO output value
0x014	GPIO_OUT_SET	GPIO output value set
0x018	GPIO_OUT_CLR	GPIO output value clear
0x01c	GPIO_OUT_XOR	GPIO output value XOR
0x020	GPIO_OE	GPIO output enable
0x024	GPIO_OE_SET	GPIO output enable set
0x028	GPIO_OE_CLR	GPIO output enable clear

GPIO_OE

Bits	Description	Type	Reset
31:30	Reserved.	-	-
29:0	Set output enable (1/0 → output/input) for GPIO0...29. Reading back gives the last value written. If core 0 and core 1 both write to GPIO_OE simultaneously (or to a SET/CLR/XOR alias), the result is as though the write from core 0 took place first, and the write from core 1 was then applied to that intermediate result.	RW	0x00000000

GPIO_IN

Bits	Description	Type	Reset
31:30	Reserved.	-	-
29:0	Input value for GPIO0...29	RO	0x00000000

```rust
use core::ptr::read_volatile;
use core::ptr::write_volatile;

const GPIO_OE: *mut u32 = 0xd000_0020 as *mut u32;
const GPIO_IN: *const u32= 0xd000_0004 as *const u32;

let value = unsafe {
    // write_volatile(GPIO_OE, !(1 << pin));
    let gpio_oe = read_volatile(GPIO_OE);
    // set bin `pin` of `gpio_oe` to 0 (input)
    gpio_oe = gpio_oe & !(1 << pin);
    write_volatile(GPIO_OE, gpio_oe);
    read_volatile(GPIO_IN) >> pin & 0b1
};
```

SIO Input

The SIO registers start at a base address of `0xd0000000` (defined as SIO_BASE in SDK).

Offset	Name	Info
0x000	CPUID	Processor core identifier
0x004	GPIO_IN	Input value for GPIO pins
0x008	GPIO_HI_IN	Input value for QSPI pins
0x010	GPIO_OUT	GPIO output value
0x014	GPIO_OUT_SET	GPIO output value set
0x018	GPIO_OUT_CLR	GPIO output value clear
0x01c	GPIO_OUT_XOR	GPIO output value XOR
0x020	GPIO_OE	GPIO output enable
0x024	GPIO_OE_SET	GPIO output enable set
0x028	GPIO_OE_CLR	GPIO output enable clear

GPIO_OE_SET

Bits	Description	Type	Reset
31:30	Reserved.	-	-
29:0	Perform an atomic bit-clear on GPIO_OE, i.e. `GPIO_OE &= ~wdata`	WO	0x00000000

GPIO_IN

Bits	Description	Type	Reset
31:30	Reserved.	-	-
29:0	Input value for GPIO0...29	RO	0x00000000

```rust
use core::ptr::read_volatile;
use core::ptr::write_volatile;

const GPIO_OE_CLR: *mut u32= 0xd000_0028 as *mut u32;
const GPIO_IN: *const u32= 0xd000_0004 as *const u32;

let value = unsafe {
  // set bit `pin` of `GPIO_OE` to 0 (input)
    write_volatile(GPIO_OE_CLR, 1 << pin);
    read_volatile(GPIO_IN) >> pin & 0b1
};
```

SIO Output

The SIO registers start at a base address of `0xd0000000` (defined as SIO_BASE in SDK).

Offset	Name	Info
0x000	CPUID	Processor core identifier
0x004	GPIO_IN	Input value for GPIO pins
0x008	GPIO_HI_IN	Input value for QSPI pins
0x010	GPIO_OUT	GPIO output value
0x014	GPIO_OUT_SET	GPIO output value set
0x018	GPIO_OUT_CLR	GPIO output value clear
0x01c	GPIO_OUT_XOR	GPIO output value XOR
0x020	GPIO_OE	GPIO output enable
0x024	GPIO_OE_SET	GPIO output enable set
0x028	GPIO_OE_CLR	GPIO output enable clear

GPIO_OE_CLR

Bits	Description	Type	Reset
31:30	Reserved.	-	-
29:0	Perform an atomic bit-clear on GPIO_OE, i.e. `GPIO_OE &= ~wdata`	WO	0x00000000

GPIO_OUT

Bits	Description	Type	Reset
31:30	Reserved.	-	-
29:0	Set output level (1/0 → high/low) for GPIO0…29. Reading back gives the last value written, NOT the input value from the pins. If core 0 and core 1 both write to GPIO_OUT simultaneously (or to a SET/CLR/XOR alias), the result is as though the write from core 0 took place first, and the write from core 1 was then applied to that intermediate result.	RW	0x00000000

```rust
use core::ptr::read_volatile;
use core::ptr::write_volatile;

const GPIO_OE_SET: *mut u32= 0xd000_0024 as *mut u32;
const GPIO_OUT: *mut u32 = 0xd000_0010 as *mut u32;

unsafe {
  // set bit `pin` of GPIO_OE to 1 (output)
  write_volatile(GPIO_OE_SET, 1 << pin);
  // write_volatile(GPIO_OUT, (value & 0b1) << pin);
  let gpio_out = read_volatile(GPIO_OUT);
  gpio_out = gpio_out | (value & 0b1) << pin;
  write_volatile(GPIO_OUT, gpio_out);
};
```

SIO Output

efficient

The SIO registers start at a base address of `0xd0000000` (defined as SIO_BASE in SDK).

Offset	Name	Info
0x000	CPUID	Processor core identifier
0x004	GPIO_IN	Input value for GPIO pins
0x008	GPIO_HI_IN	Input value for QSPI pins
0x010	GPIO_OUT	GPIO output value
0x014	GPIO_OUT_SET	GPIO output value set
0x018	GPIO_OUT_CLR	GPIO output value clear
0x01c	GPIO_OUT_XOR	GPIO output value XOR
0x020	GPIO_OE	GPIO output enable
0x024	GPIO_OE_SET	GPIO output enable set
0x028	GPIO_OE_CLR	GPIO output enable clear

GPIO_OUT_SET

Bits	Description	Type	Reset
31:30	Reserved.	-	-
29:0	Perform an atomic bit-set on GPIO_OUT, i.e. `GPIO_OUT |= wdata`	WO	0x00000000

GPIO_OUT_CLR

Bits	Description	Type	Reset
31:30	Reserved.	-	-
29:0	Perform an atomic bit-clear on GPIO_OUT, i.e. `GPIO_OUT &= ~wdata`	WO	0x00000000

```rust
use core::ptr::read_volatile;
use core::ptr::write_volatile;

const GPIO_OE_SET: *mut u32= 0xd000_0024 as *mut u32;
const GPIO_OUT_SET:*mut u32= 0xd000_0014 as *mut u32;
const GPIO_OUT_CLR:*mut u32= 0xd000_0018 as *mut u32;

unsafe {
    write_volatile(GPIO_OE_SET, 1 << pin);
    let reg = match value {
      0 => GPIO_OUT_CLR,
      _ => GPIO_OUT_SET
    };
    write_volatile(reg, 1 << pin);
};
```

IO Bank

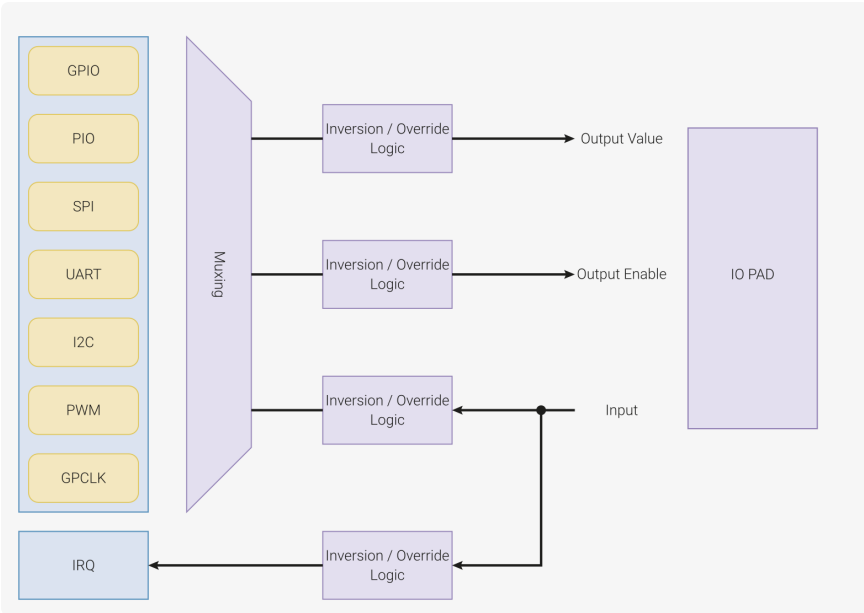

The User Bank IO registers start at a base address of `0x40014000` (defined as IO_BANK0_BASE in SDK).

Offset	Name	Info
0x000	GPIO0_STATUS	GPIO status
0x004	GPIO0_CTRL	GPIO control including function select and overrides.

- set `FUNCSEL` to `5` (*SIO*)

GPIOx_CTRL

Offset: 0x004, 0x00c, … 0x0ec (0x4 + 8*x)

Bits	Name	Description	Type	Reset
31:30	Reserved.	-	-	-
29:28	IRQOVER	0x0 → don't invert the interrupt 0x1 → invert the interrupt 0x2 → drive interrupt low 0x3 → drive interrupt high	RW	0x0
27:18	Reserved.	-	-	-
17:16	INOVER	0x0 → don't invert the peri input 0x1 → invert the peri input 0x2 → drive peri input low 0x3 → drive peri input high	RW	0x0
15:14	Reserved.	-	-	-
13:12	OEOVER	0x0 → drive output enable from peripheral signal selected by funcsel 0x1 → drive output enable from inverse of peripheral signal selected by funcsel 0x2 → disable output 0x3 → enable output	RW	0x0
11:10	Reserved.	-	-	-
9:8	OUTOVER	0x0 → drive output from peripheral signal selected by funcsel 0x1 → drive output from inverse of peripheral signal selected by funcsel 0x2 → drive output low 0x3 → drive output high	RW	0x0
7:5	Reserved.	-	-	-
4:0	FUNCSEL	Function select. 31 == NULL. See GPIO function table for available functions.	RW	0x1f

IO Bank Input

The User Bank IO registers start at a base address of `0x40014000` (defined as IO_BANK0_BASE in SDK).

Offset	Name	Info
0x000	GPIO0_STATUS	GPIO status
0x004	GPIO0_CTRL	GPIO control including function select and overrides.

```rust
use core::ptr::read_volatile;
use core::ptr::write_volatile;

const GPIOX_CTRL: u32 = 0x4001_4004;
const GPIO_OE_CLR: *mut u32= 0xd000_0028 as *mut u32;
const GPIO_IN: *const u32= 0xd000_0004 as *const u32;

let gpio_ctrl = (GPIOX_CTRL + 8 * pin) as *mut u32;

let value = unsafe {
    write_volatile(gpio_ctrl, 5);
    write_volatile(GPIO_OE_CLR, 1 << pin);
    read_volatile(GPIO_IN) >> pin & 0b1
};
```

GPIOx_CTRL

Offset: 0x004, 0x00c, ... 0x0ec (0x4 + 8*x)

Bits	Name	Description	Type	Reset
31:30	Reserved.	-	-	-
29:28	IRQOVER	0x0 → don't invert the interrupt 0x1 → invert the interrupt 0x2 → drive interrupt low 0x3 → drive interrupt high	RW	0x0
27:18	Reserved.	-	-	-
17:16	INOVER	0x0 → don't invert the peri input 0x1 → invert the peri input 0x2 → drive peri input low 0x3 → drive peri input high	RW	0x0
15:14	Reserved.	-	-	-
13:12	OEOVER	0x0 → drive output enable from peripheral signal selected by funcsel 0x1 → drive output enable from inverse of peripheral signal selected by funcsel 0x2 → disable output 0x3 → enable output	RW	0x0
11:10	Reserved.	-	-	-
9:8	OUTOVER	0x0 → drive output from peripheral signal selected by funcsel 0x1 → drive output from inverse of peripheral signal selected by funcsel 0x2 → drive output low 0x3 → drive output high	RW	0x0
7:5	Reserved.	-	-	-
4:0	FUNCSEL	Function select. 31 == NULL. See GPIO function table for available functions.	RW	0x1f

IO Bank Output

The User Bank IO registers start at a base address of `0x40014000` (defined as IO_BANK0_BASE in SDK).

Offset	Name	Info
0x000	GPIO0_STATUS	GPIO status
0x004	GPIO0_CTRL	GPIO control including function select and overrides.

```rust
use core::ptr::read_volatile;
use core::ptr::write_volatile;

const GPIOX_CTRL: u32 = 0x4001_4004;
const GPIO_OE_SET: *mut u32= 0xd000_0024 as *mut u32;
const GPIO_OUT_SET:*mut u32= 0xd000_0014 as *mut u32;
const GPIO_OUT_CLR:*mut u32= 0xd000_0018 as *mut u32;

let gpio_ctrl = (GPIOX_CTRL + 8 * pin) as *mut u32;
unsafe {
    write_volatile(gpio_ctrl, 5);
    write_volatile(GPIO_OE_SET, 1 << pin);
    let reg = match value {
      0 => GPIO_OUT_CLR,
      _ => GPIO_OUT_SET
    };
    write_volatile(reg, 1 << pin);
};
```

GPIOx_CTRL

Offset: 0x004, 0x00c, … 0x0ec (0x4 + 8*x)

Bits	Name	Description	Type	Reset
31:30	Reserved.	-	-	-
29:28	IRQOVER	0x0 → don't invert the interrupt 0x1 → invert the interrupt 0x2 → drive interrupt low 0x3 → drive interrupt high	RW	0x0
27:18	Reserved.	-	-	-
17:16	INOVER	0x0 → don't invert the peri input 0x1 → invert the peri input 0x2 → drive peri input low 0x3 → drive peri input high	RW	0x0
15:14	Reserved.	-	-	-
13:12	OEOVER	0x0 → drive output enable from peripheral signal selected by funcsel 0x1 → drive output enable from inverse of peripheral signal selected by funcsel 0x2 → disable output 0x3 → enable output	RW	0x0
11:10	Reserved.	-	-	-
9:8	OUTOVER	0x0 → drive output from peripheral signal selected by funcsel 0x1 → drive output from inverse of peripheral signal selected by funcsel 0x2 → drive output low 0x3 → drive output high	RW	0x0
7:5	Reserved.	-	-	-
4:0	FUNCSEL	Function select. 31 == NULL. See GPIO function table for available functions.	RW	0x1f

Pad Control

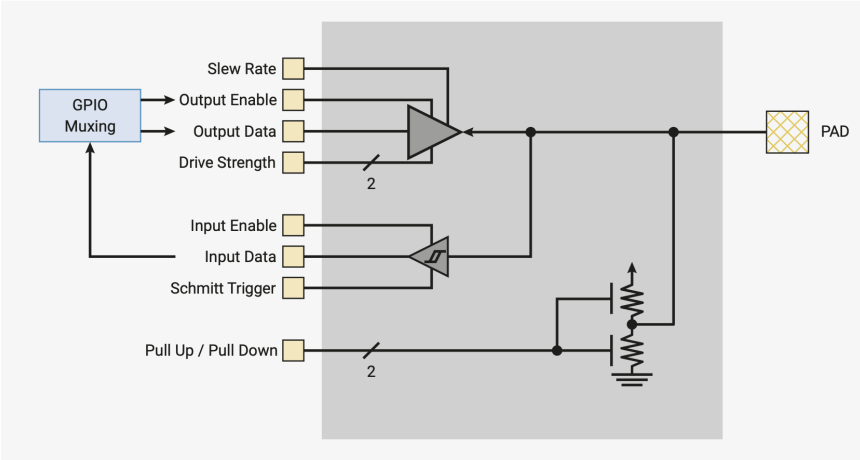

The User Bank Pad Control registers start at a base address of `0x4001c000` (defined as PADS_BANK0_BASE in SDK).

Offset	Name	Info
0x00	VOLTAGE_SELECT	Voltage select. Per bank control
0x04	GPIO0	Pad control register
0x08	GPIO1	Pad control register
0x0c	GPIO2	Pad control register
0x10	GPIO3	Pad control register
0x14	GPIO4	Pad control register
0x18	GPIO5	Pad control register

GPIOx Register

Offset: 0x004, 0x008, ... 0x078 (0x4 + 4*x)

Bits	Name	Description	Type	Reset
31:8	Reserved.	-	-	-
7	OD	Output disable. Has priority over output enable from peripherals	RW	0x0
6	IE	Input enable	RW	0x1

Bits	Name	Description	Type	Reset
5:4	DRIVE	Drive strength. 0x0 → 2mA 0x1 → 4mA 0x2 → 8mA 0x3 → 12mA	RW	0x1
3	PUE	Pull up enable	RW	0x0
2	PDE	Pull down enable	RW	0x1
1	SCHMITT	Enable schmitt trigger	RW	0x1
0	SLEWFAST	Slew rate control. 1 = Fast, 0 = Slow	RW	0x0

Input

read the value from pin `x`

- set the `FUNCSEL` field of `GPIOx_CTRL` to `5`
- set the `GPIO_OE_CLR` bit `x` to `1`
- read the `GPIO_IN` bit `x`
- *adjust the `GPIOx` fields to set the pull up/down resistor*

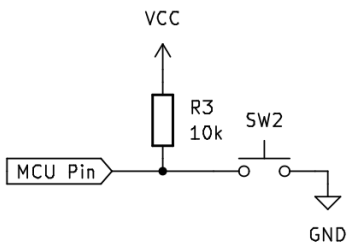

Output

write a value to pin `x`

- set the `FUNCSEL` field of `GPIOx_CTRL` to `5`
- set the `GPIO_OE_SET` bit `x` to `1`
- if the value
  - is `0`, set the `GPIO_OUT_CLR` bit `x` to `1`
  - is `1`, set the `GPIO_OUT_SET` bit `x` to `1`
- *adjust the `GPIOx` fields to set the output current*

Rust Embedded HAL

The Rust API for embedded systems

The Rust Embedded Stack

Framework	Tasks, Memory Management, Network etc. `embassy-rs`, `rtic`
BSC	Board Support Crate `embassy-rp`, `rp-pico`
HAL Implementation	Uses the PAC and exports a standard HAL towards the upper levels `embassy-rp`
PAC	Accesses registers, usually created automatically from SVD files - `rp2040_pac`, `rp-pac`

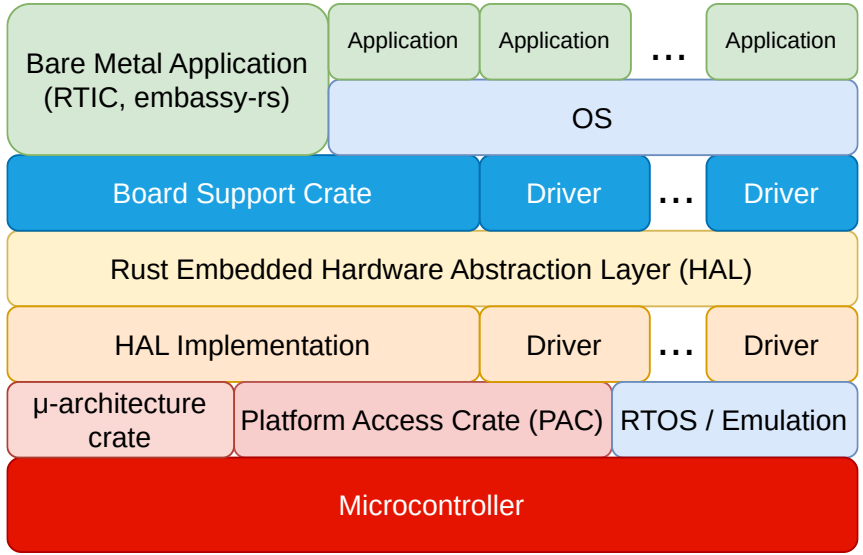

GPIO HAL

A set of standard traits

All devices should implement these traits for GPIO.

```
pub enum PinState {
    Low,
    High,
}
```

Input

```
pub trait InputPin: ErrorType {
  // Required methods
  fn is_high(&mut self) -> Result<bool, Self::Error>;
  fn is_low(&mut self) -> Result<bool, Self::Error>;
}
```

Output

```
pub trait OutputPin: ErrorType {
  // Required methods
  fn set_low(&mut self) -> Result<(), Self::Error>;
  fn set_high(&mut self) -> Result<(), Self::Error>;

  // Provided method
  fn set_state(&mut self, state: PinState) -> Result<(), Sel
}
```

Bare metal

This is how a Rust application would look like

```rust
#![no_std]
#![no_main]

use cortex_m_rt::entry;

#[entry]
fn main() -> ! {
    // your code goes here

    loop { }
}

#[panic_handler]
pub fn panic(_info: &PanicInfo) -> ! {
    loop { }
}
```

Rules

1. never exit the `main` function
2. add a panic handler that does not exit

Bare metal without PAC & HAL

This is how a Rust application would look like

```rust
#![no_std]
#![no_main]

use core::ptr::{read_volatile, write_volatile};
use cortex_m_rt::entry;

const GPIOX_CTRL: u32 = 0x4001_4004;
const GPIO_OE_SET: *mut u32= 0xd000_0024 as *mut u32;
const GPIO_OUT_SET:*mut u32= 0xd000_0014 as *mut u32;
const GPIO_OUT_CLR:*mut u32= 0xd000_0018 as *mut u32;

#[panic_handler]
pub fn panic(_info: &PanicInfo) -> ! {
    loop { }
}
```

```rust
#[entry]
fn main() -> ! {
    let gpio_ctrl = GPIOX_CTRL + 8 * pin as *mut u32;
    unsafe {
        write_volatile(gpio_ctrl, 5);
        write_volatile(GPIO_OE_SET, 1 << pin);
        let reg = match value {
        0 => GPIO_OUT_CLR,
        _ => GPIO_OUT_SET
        };
        write_volatile(reg, 1 << pin);
    };

    loop { }
}
```

embassy-rs

Embedded Asynchronous

embassy-rs

- framework
- uses the rust-embedded-hal
- Features
  - Real-time
  - Low power
  - Networking
  - Bluetooth
  - USB
  - Bootloader and DFU

GPIO Input

```rust
#![no_std]
#![no_main]

use embassy_executor::Spawner;
use embassy_rp::gpio;
use gpio::{Input, Pull};

#[embassy_executor::main]
async fn main(_spawner: Spawner) {
    let p = embassy_rp::init(Default::default());
    let pin = Input::new(p.PIN_3, Pull:Up);

    if pin.is_high() {

    } else {

    }
}
```

The `main` function is called by the embassy-rs framework, so it can exit.

GPIO Output

```rust
#![no_std]
#![no_main]

use embassy_executor::Spawner;
use embassy_rp::gpio;
use gpio::{Level, Output};

#[embassy_executor::main]
async fn main(_spawner: Spawner) {
    let p = embassy_rp::init(Default::default());
    let mut pin = Output::new(p.PIN_2, Level::Low);

    pin.set_high();
}
```

The `main` function is called by the embassy-rs framework, so it can exit.

Conclusion

we talked about

- Memory Mapped IO
- RP2040 GPIO
  - Single Cycle IO
  - IO Bank
  - Pad
- The Rust embedded standard stack
- Bare metal Rust
- The embassy-rs framework