# Memory Mapped IO used for GPIO

Lecture 2

# GPIO for RP2040

- Memory Mapped I/O
  - GPIO Peripheral
- Embedded Rust Stack
- embassy-rs

# MMIO

Memory Mapped Input Output

# 8 bit processor

a simple 8 bit processor with a text display

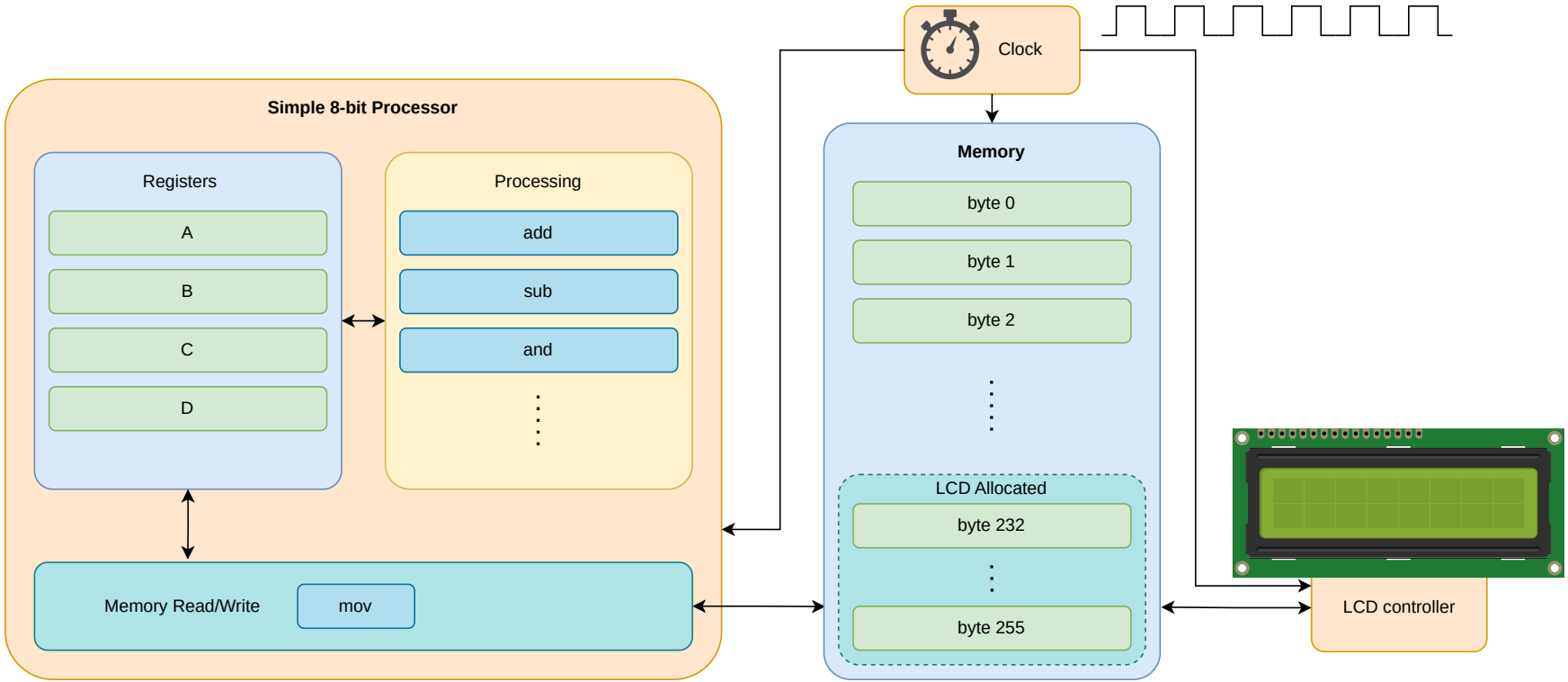

# STM32L0x2

A real MCU

| | |
|---|---|
| Cortex-M0+ Peripherals | MCU's *settings* and internal peripherals, available at the same address on all M0+ |
| Peripherals | GPIO, USART, SPI, I2C, USB, etc |
| Flash | The storage space |
| SRAM | RAM memory |
| @0x0000_0000 | Alias for SRAM or Flash |

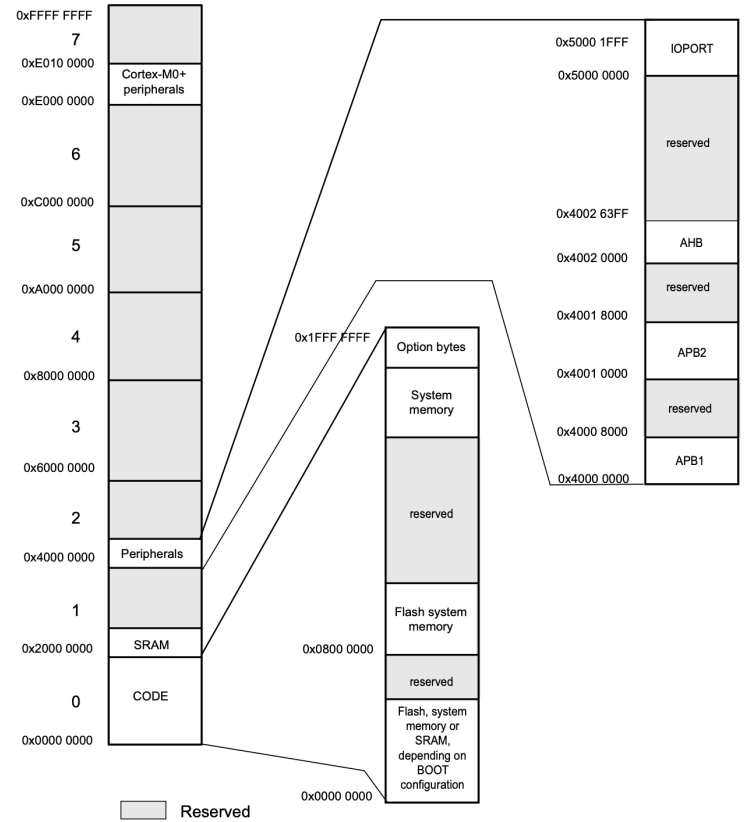

# System Control Registers

@0xe000_0000

Compute the actual address

- 0xe000_0000 + Offset

Examples:

- SYST_CSR: **0xe000_e010** (*0xe000_0000 + 0xe010*)
- CPUID: **0xe000_ed00** (*0xe000_0000 + 0xed00*)

```
const SYS_CTRL: usize = 0xe000_0000;
const CPUID: usize = 0xed00;

let cpuid_reg = (SYS_CTRL + CPUID) as *const u32;
let cpuid_value = unsafe { *cpuid_reg };
// or
let cpuid_value = unsafe { cpuid_reg.read() };
```

⚠ Compilers optimize code and processors use cache!

| Offset | Name | Info |
|---|---|---|
| 0xe010 | SYST_CSR | SysTick Control and Status Register |
| 0xe014 | SYST_RVR | SysTick Reload Value Register |
| 0xe018 | SYST_CVR | SysTick Current Value Register |
| 0xe01c | SYST_CALIB | SysTick Calibration Value Register |
| 0xe100 | NVIC_ISER | Interrupt Set-Enable Register |
| 0xe180 | NVIC_ICER | Interrupt Clear-Enable Register |
| 0xe200 | NVIC_ISPR | Interrupt Set-Pending Register |
| 0xe280 | NVIC_ICPR | Interrupt Clear-Pending Register |
| 0xe400 | NVIC_IPR0 | Interrupt Priority Register 0 |
| 0xe404 | NVIC_IPR1 | Interrupt Priority Register 1 |
| 0xe408 | NVIC_IPR2 | Interrupt Priority Register 2 |
| 0xe40c | NVIC_IPR3 | Interrupt Priority Register 3 |
| 0xe410 | NVIC_IPR4 | Interrupt Priority Register 4 |
| 0xe414 | NVIC_IPR5 | Interrupt Priority Register 5 |
| 0xe418 | NVIC_IPR6 | Interrupt Priority Register 6 |
| 0xe41c | NVIC_IPR7 | Interrupt Priority Register 7 |
| 0xed00 | CPUID | CPUID Base Register |
| 0xed04 | ICSR | Interrupt Control and State Register |
| 0xed08 | VTOR | Vector Table Offset Register |
| 0xed0c | AIRCR | Application Interrupt and Reset Control Register |
| 0xed10 | SCR | System Control Register |
| 0xed14 | CCR | Configuration and Control Register |

# Compiler Optimization

compilers optimize code

Write bytes to the `UART` (serial port) data register

```
// we use mut as we need to write to it
const UART_TX: *mut u8 = 0x400_3400;
// b".." means ASCII string (Rust uses UTF-8 strings by default)
for character in b"Hello, World".iter() {
  // character is &char, so we use *character to get the value
  unsafe { UART_TX.write(*character); }
}
```

1. The compiler does not know that `UART_TX` is a register and uses it as a memory address.
2. Writing several values to the same memory address will result in having the last value stored at that address.
3. The compiler optimizes the code write the value

```
const UART_TX: *mut u8 = 0x400_3400;
unsafe { UART_TX.write(b'd'); }
```

# No Compiler Optimization

CPUID: **0xe000_ed00** (*0xe000_0000* + *0xed00*)

```rust
use core::ptr::read_volatile;

const SYS_CTRL: usize = 0xe000_0000;
const CPUID: usize = 0xed00;

let cpuid_reg = (SYS_CTRL + CPUID) as *const u32;
unsafe {
    read_volatile(cpuid_reg) // avoid cache
}
```

| | |
|---|---|
| `read_volatile`, `write_volatile` | **no** compiler **optimization** |
| `read`, `write`, `*p` | **use** compiler **optimization** |

| Offset | Name | Info |
|---|---|---|
| 0xe010 | SYST_CSR | SysTick Control and Status Register |
| 0xe014 | SYST_RVR | SysTick Reload Value Register |
| 0xe018 | SYST_CVR | SysTick Current Value Register |
| 0xe01c | SYST_CALIB | SysTick Calibration Value Register |
| 0xe100 | NVIC_ISER | Interrupt Set-Enable Register |
| 0xe180 | NVIC_ICER | Interrupt Clear-Enable Register |
| 0xe200 | NVIC_ISPR | Interrupt Set-Pending Register |
| 0xe280 | NVIC_ICPR | Interrupt Clear-Pending Register |
| 0xe400 | NVIC_IPR0 | Interrupt Priority Register 0 |
| 0xe404 | NVIC_IPR1 | Interrupt Priority Register 1 |
| 0xe408 | NVIC_IPR2 | Interrupt Priority Register 2 |
| 0xe40c | NVIC_IPR3 | Interrupt Priority Register 3 |
| 0xe410 | NVIC_IPR4 | Interrupt Priority Register 4 |
| 0xe414 | NVIC_IPR5 | Interrupt Priority Register 5 |
| 0xe418 | NVIC_IPR6 | Interrupt Priority Register 6 |
| 0xe41c | NVIC_IPR7 | Interrupt Priority Register 7 |
| 0xed00 | CPUID | CPUID Base Register |
| 0xed04 | ICSR | Interrupt Control and State Register |
| 0xed08 | VTOR | Vector Table Offset Register |
| 0xed0c | AIRCR | Application Interrupt and Reset Control Register |
| 0xed10 | SCR | System Control Register |
| 0xed14 | CCR | Configuration and Control Register |

# No Compiler Optimization

Write bytes to the `UART` (serial port) data register

```rust
use core::ptr::write_volatile;

// we use mut as we need to write to it
const UART_TX: *mut u8 = 0x400_3400;
// b".." means ASCII string (Rust uses UTF-8 strings by default)
for character in b"Hello, World".iter() {
  // character is &char, so we use *character to get the value
  unsafe { write_volatile(UART_TX, *character); }
}
```

The compiler **knows** that `UART_TX` **must be written** every time.

# 8 bit processor

with cache

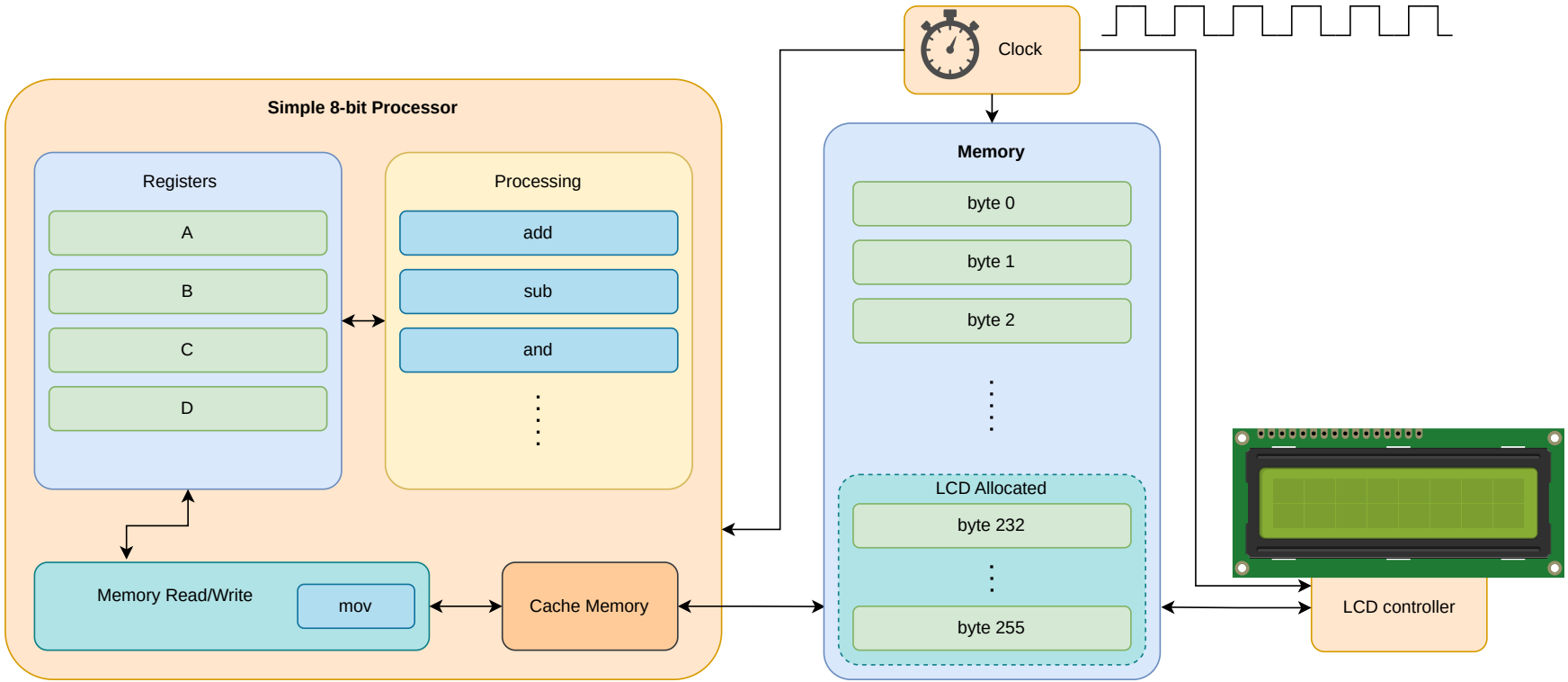

# No Cache or Flush Cache

- Cache types:
  - *write-through* - data is written to the cache and to the main memory (bus)
  - *write-back* - data is written to the cache and later to the main memory (bus)
- few Cortex-M MCUs have cache
- the Memory Mapped I/O region is set as *nocache*
- for chips that use cache
  - *nocache* regions have to be set manually (if MCU knows)
  - or, the cache has to be flushed before a `volatile_read` and after a `volatile_write`
  - beware DMA controllers that can't see the cache contents

# Read the CPUID

About the MCU

```rust
use core::ptr::read_volatile;

const SYS_CTRL: usize = 0xe000_0000;
const CPUID: usize = 0xed00;

let cpuid_reg = (SYS_CTRL + CPUID) as *const u32;
let cpuid_value = unsafe {
    read_volatile(cpuid_reg)
};

// shift right 24 bits and keep only the last 8 bits
let variant = (cpuid_value >> 24) & 0b1111_1111;

// shift right 16 bits and keep only the last 4 bits
let architecture = (cpuid_value >> 16) & 0b1111;

// shift right 4 bits and keep only the last 12 bits
let part_no = (cpuid_value >> 4) & 0b11_1111_1111;

// shift right 0 bits and keep only the last 4 bits
let revision = (cpuid_value >> 0) & 0b1111;
```

# CPUID Register

Offset: 0xed04

| Bits | Name | Description | Type | Reset |
|---|---|---|---|---|
| 31:24 | IMPLEMENTER | Implementor code: 0x41 = ARM | RO | 0x41 |
| 23:20 | VARIANT | Major revision number n in the rnpm revision status: 0x0 = Revision 0. | RO | 0x0 |
| 19:16 | ARCHITECTURE | Constant that defines the architecture of the processor: 0xC = ARMv6-M architecture. | RO | 0xc |
| 15:4 | PARTNO | Number of processor within family: 0xC60 = Cortex-M0+ | RO | 0xc60 |
| 3:0 | REVISION | Minor revision number m in the rnpm revision status: 0x1 = Patch 1. | RO | 0x1 |

# AIRCR

Application Interrupt and Reset Control Register

```rust
use core::ptr::read_volatile;
use core::ptr::write_volatile;

const SYS_CTRL: usize = 0xe000_0000;
const AIRCR: usize = 0xed0c;

const VECTKEY: u32 = 16;
const SYSRESETREQ: u32 = 2;

let aircr_register = (SYS_CTRL + AIRCR) as *mut u32;
let mut aircr_value = unsafe {
    read_volatile(aircr_register)
};

aircr_value = aircr_value & ~(0x1111 << VECTKEY);
aircr_value = aircr_value | (0x05fa << VECTKEY);
aircr_value = aircr_value | (1 << SYSRESETREQ);

unsafe {
    write_volatile(aircr_register, aircr_value);
}
```

# AIRCR Register

## Offset: 0xed0c

| Bits | Name | Description | Type | Reset |
|---|---|---|---|---|
| 31:16 | VECTKEY | Register key:<br>Reads as Unknown<br>On writes, write 0x05FA to VECTKEY, otherwise the write is ignored. | RW | 0x0000 |
| 15 | ENDIANESS | Data endianness implemented:<br>0 = Little-endian. | RO | 0x0 |
| 14:3 | Reserved. | - | - | - |

| Bits | Name | Description | Type | Reset |
|---|---|---|---|---|
| 2 | SYSRESETREQ | Writing 1 to this bit causes the SYSRESETREQ signal to the outer system to be asserted to request a reset. The intention is to force a large system reset of all major components except for debug. The C_HALT bit in the DHCSR is cleared as a result of the system reset requested. The debugger does not lose contact with the device. | RW | 0x0 |
| 1 | VECTCLRACTIVE | Clears all active state information for fixed and configurable exceptions. This bit: is self-clearing, can only be set by the DAP when the core is halted. When set: clears all active exception status of the processor, forces a return to Thread mode, forces an IPSR of 0. A debugger must re-initialize the stack. | RW | 0x0 |
| 0 | Reserved. | - | - | - |

# Read and Write

they do stuff

- Read
  - reads the value of a register
  - might ask the peripheral to do something
- Write
  - writes the value to a register
  - might ask the peripheral to do something
    - SYSRESETREQ

# AIRCR Register

Offset: 0xed0c

| Bits | Name | Description | Type | Reset |
|---|---|---|---|---|
| 31:16 | VECTKEY | Register key:<br>Reads as Unknown<br>On writes, write 0x05FA to VECTKEY, otherwise the write is ignored. | RW | 0x0000 |
| 15 | ENDIANESS | Data endianness implemented:<br>0 = Little-endian. | RO | 0x0 |
| 14:3 | Reserved. | - | - | - |

| Bits | Name | Description | Type | Reset |
|---|---|---|---|---|
| 2 | SYSRESETREQ | Writing 1 to this bit causes the SYSRESETREQ signal to the outer system to be asserted to request a reset. The intention is to force a large system reset of all major components except for debug. The C_HALT bit in the DHCSR is cleared as a result of the system reset requested. The debugger does not lose contact with the device. | RW | 0x0 |
| 1 | VECTCLRACTIVE | Clears all active state information for fixed and configurable exceptions. This bit: is self-clearing, can only be set by the DAP when the core is halted. When set: clears all active exception status of the processor, forces a return to Thread mode, forces an IPSR of 0. A debugger must re-initialize the stack. | RW | 0x0 |
| 0 | Reserved. | - | - | - |

# SVD XML File

System View Description

```xml
<device schemaVersion="1.1"
  xmlns:xs="http://www.w3.org/2001/XMLSchema-instance" xs:noNamespaceSchemaLocation="CMSIS-SVD.xsd">
  <name>RP2040</name>
  <peripherals>
    <name>PPB</name>
    <baseAddress>0xe0000000</baseAddress>
    <register>
      <name>CPUID</name>
      <addressOffset>0xed00</addressOffset>
      <resetValue>0x410cc601</resetValue>
      <fields>
        <field>
          <name>IMPLEMENTER</name>
          <description>Implementor code: 0x41 = ARM</description>
          <bitRange>[31:24]</bitRange>
          <access>read-only</access>
        </field>
        <!-- rest of the fields of the register -->
      </fields>
    </register>
  </peripherals>
</device>
```

# Bitwise Ops

How to set and clear bits

# Set bit

## set the `1` on position `bit` of `register`

```
fn set_bit(register: usize, bit: u8) -> usize {
    // assume register is 0b1000, bit is 2
    //   1 << 2 is 0b0100
    //   0b1000 | 0b0100 is 0b1100
    register | 1 << bit
}
```

## Set multiple bits

```
fn set_bits(register: usize, bits: usize) -> usize {
    // assume register is 0b1000, bits is 0b0111
    //   0b1000 | 0b0111 is 0b1111
    register | bits
}
```

# Clear bit

## Set the `0` on position `bit` of `register`

```
fn clear_bit(register: usize, bit: u8) -> usize {
    // assume register is 0b1100, bit is 2
    //   1 << 2 is 0b0100
    //   !(1 << 3) is 0b1011
    //   0b1100 & 0b1011 is 0b1000
    register & !(1 << bit)
}
```

## Clear multiple bits

```
fn clear_bits(register: usize, bits: usize) -> usize {
    // assume register is 0b1111, bits is 0b0111
    //   !bits = 0b1000
    //   0b1111 & 0b1000 is 0b1000
    register & !bits
}
```

# Flip bit

## Flip the bit on position `bit` of `register`

```
fn flip_bit(register: usize, bit: u8) -> usize {
    // assume register is 0b1000, bit is 2
    //   1 << 2 is 0b0100
    //   0b1100 ^ 0b0100 is 0b1000
    register ^ 1 << bit
}
```

## Flip multiple bits

```
fn flip_bits(register: usize, bits: usize) -> usize {
    // assume register is 0b1000, bits is 0b0111
    //   0b1000 ^ 0b0111 is 0b1111
    register ^ bits
}
```

# Let’s see a combined operation for value extraction

- We presume an 32 bits ID = `0b1100_1010_1111_1100_0000_1111_0110_1101`
- And want to extract a portion `0b`**`1100_1010_1111`**`_1100_0000_1111_0110_1101`

```rust
const MASK: u32 = 0b0000_0000_0000_0000_0000_1111_1111_1111;

fn print_binary(label: &str, num: u32) {
    println!("{}: {:032b}", label, num);
}

fn main() {
    let large_id: u32 = 0b1100_1010_1111_1100_0000_1111_0110_1101;
    let extracted_bits = (large_id >> 20) & MASK;

   // Print values in binary
    print_binary("Original_", large_id);
    print_binary("Mask_____", MASK);
    print_binary("Extracted", extracted_bits);
}
/* RESULT
Original_: 11001010111111000000111101101101
Mask_____: 00000000000000000000111111111111
Extracted: 00000000000000000000110010101111 */
```

# With nice formating

```
1   const MASK: u32 = 0b0000_0000_0000_0000_0000_1111_1111_1111;
2   fn format_binary(num: u32) -> String {
3       (0..32).rev()
4           .map(|i| {
5               if i != 0 && i % 4 == 0 {
6                   format!("{}_", (num >> i) & 1)
7               } else {
8                   format!("{}", (num >> i) & 1)
9               }
10          })
11          .collect::<Vec<_>>()
12          .join("")
13  }
14  fn print_binary(label: &str, num: u32) { println!("{}: {}", label, format_binary(num));}
15  fn main() {
16      let large_id: u32 = 0b1100_1010_1111_1100_0000_1111_0110_1101;
17      let extracted_bits = (large_id >> 20) & MASK;
18      print_binary("Original_", large_id);
19      print_binary("Extracted", extracted_bits);
20  }
21  /* RESULTS:
22  Original_: 1100_1010_1111_1100_0000_1111_0110_1101
23  Extracted: 0000_0000_0000_0000_0000_1100_1010_1111 */
```

# Bitwise Ops - in C

## Set the `1` on position `bit` of `register` in C

```c
unsigned int set_bit(unsigned int register_value, unsigned char bit) {
    // assume register_value is 0b1000, bit is 2
    //   1 << 2 is 0b0100
    //   0b1000 | 0b0100 is 0b1100
    return register_value | (1 << bit);
}
```

## Set multiple bits

```c
unsigned int set_bits(unsigned int register_value, unsigned int bits) {
    // assume register_value is 0b1000, bits is 0b0111
    //   0b1000 | 0b0111 is 0b1111
    return register_value | bits;
}
```

# (test code)

```c
#include <stdio.h>

void print_binary(unsigned int num) {
    for (int i = sizeof(num) * 8 - 1; i >= 0; i--) {
        printf("%c", (num & (1 << i)) ? '1' : '0');
    }
    printf("\n"); //prints "num" number in binary format
}

unsigned int set_bits(unsigned int register_value, unsigned int bits) {
    return register_value | bits;
}

int main() {
    unsigned int reg = 0b1000;
    unsigned int bits_to_set = 0b0011;

    unsigned int result = set_bits(reg, bits_to_set);

    printf("Register before: ");    print_binary(reg);
    printf("Bits to set:     ");    print_binary(bits_to_set);
    printf("Result after:    ");    print_binary(result);
    return 0;
}
```

# Combined operation for value extraction in C

```c
#include <stdio.h>
void print_binary(const char *label, unsigned int num) {
    printf("%s: ", label);
    for (int i = 31; i >= 0; i--) {
        printf("%c", (num & (1 << i)) ? '1' : '0');
    }
    printf("\n");
}

int main() {
    unsigned int large_id = 0b11001010111110000001111101101101;
    unsigned int mask = 0b00000000000000000000111111111111;
    unsigned int extracted_bits = (large_id >> 20) & mask;

    print_binary("Original_", large_id);
    print_binary("Mask_____", mask);
    print_binary("Extracted", extracted_bits);

    return 0;
}
//RESULT
//Original_: 11001010111110000001111101101101
//Mask_____: 00000000000000000000111111111111
//Extracted: 00000000000000000000110010101111
```

# With nice formating

```c
#include <stdio.h>
void print_binary(const char *label, unsigned int num) {
    printf("%s: ", label);
    for (int i = 31; i >= 0; i--) {
        printf("%c", (num & (1 << i)) ? '1' : '0');
    if (i % 4 == 0 && i != 0) { printf("_"); }
    }
    printf("\n");
}
int main() {
    unsigned int large_id = 0b11001010111111000000111101101101;
    unsigned int mask = 0b00000000000000000000111111111111;
    unsigned int extracted_bits = (large_id >> 20) & mask;

 print_binary("Original_", large_id);
    print_binary("Mask_____", mask);
    print_binary("Extracted", extracted_bits);

    return 0;
}
//RESULTS
//Original_: 1100_1010_1111_1100_0000_1111_0110_1101
//Mask_____: 0000_0000_0000_0000_0000_1111_1111_1111
//Extracted: 0000_0000_0000_0000_0000_1100_1010_1111
```

# GPIO

General Purpose Input Output for RP2040

# Bibliography

for this section

**Raspberry Pi Ltd**, *RP2040 Datasheet*

- Chapter 2 - *System Description*
  - Section 2.3 - *Processor subsystem*
    - Subsection 2.3.1 - *SIO*
      - Subsection 2.3.1.2 - *GPIO Control*
  - Section 2.4 - *Cortex-M0+* (except NVIC and MPU)
  - Section 2.19 - *GPIO* (except Interrupts)

# RP2040 GPIO Pins

GPIO pins are connected to the processor pins through three peripherals

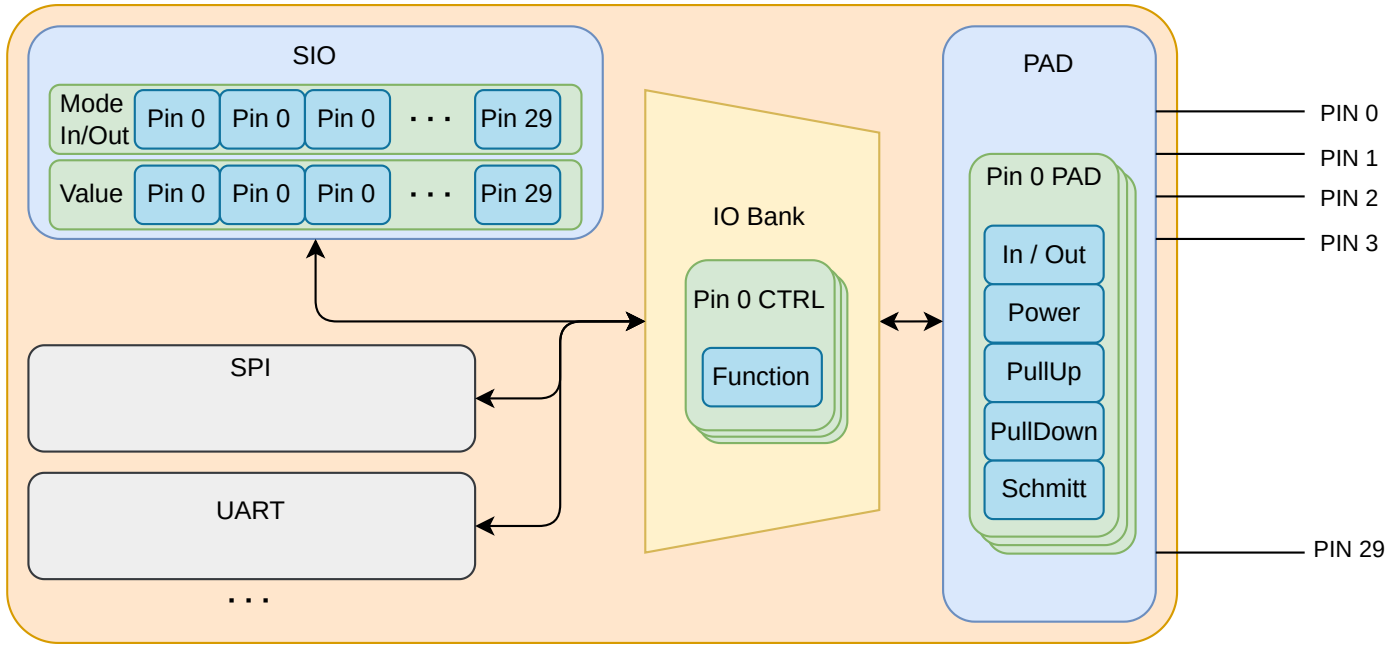

# GPIO

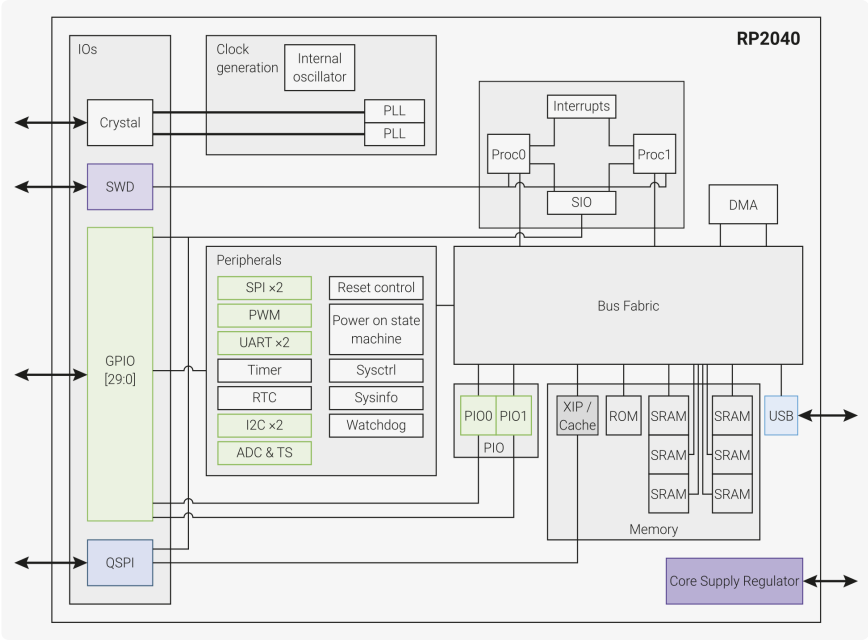


*SIO*: Set the pin as Input or Output
*IO Bank (GPIO)*: Use the correct MUX function (F5)
*PAD*: Set the pin input and output parameters

# Peripherals

| | |
|---|---|
| SIO | Single Cycle Input/Output, is able to control the GPIO pins |
| GPIO | Multiplexes the functions of the GPIO pins |

# SIO Registers

The SIO registers start at a base address of `0xd0000000` (defined as SIO_BASE in SDK).

| Offset | Name | Info |
|---|---|---|
| 0x000 | CPUID | Processor core identifier |
| 0x004 | GPIO_IN | Input value for GPIO pins |
| 0x008 | GPIO_HI_IN | Input value for QSPI pins |
| 0x010 | GPIO_OUT | GPIO output value |
| 0x014 | GPIO_OUT_SET | GPIO output value set |
| 0x018 | GPIO_OUT_CLR | GPIO output value clear |
| 0x01c | GPIO_OUT_XOR | GPIO output value XOR |
| 0x020 | GPIO_OE | GPIO output enable |
| 0x024 | GPIO_OE_SET | GPIO output enable set |
| 0x028 | GPIO_OE_CLR | GPIO output enable clear |

- Input
  - set GPIO_OE bit x to 0
  - read GPIO_IN bit x
- Ouput
  - set GPIO_OE bit x to 1
  - write GPIO_OUT bit x

## GPIO_OE

| Bits | Description | Type | Reset |
|---|---|---|---|
| 31:30 | Reserved. | - | - |
| 29:0 | Set output enable (1/0 → output/input) for GPIO0...29.<br>Reading back gives the last value written.<br>If core 0 and core 1 both write to GPIO_OE simultaneously (or to a SET/CLR/XOR alias),<br>the result is as though the write from core 0 took place first,<br>and the write from core 1 was then applied to that intermediate result. | RW | 0x00000000 |

## GPIO_IN

| Bits | Description | Type | Reset |
|---|---|---|---|
| 31:30 | Reserved. | - | - |
| 29:0 | Input value for GPIO0...29 | RO | 0x00000000 |

## GPIO_OUT

| Bits | Description | Type | Reset |
|---|---|---|---|
| 31:30 | Reserved. | - | - |
| 29:0 | Set output level (1/0 → high/low) for GPIO0...29.<br>Reading back gives the last value written, NOT the input value from the pins.<br>If core 0 and core 1 both write to GPIO_OUT simultaneously (or to a SET/CLR/XOR alias),<br>the result is as though the write from core 0 took place first,<br>and the write from core 1 was then applied to that intermediate result. | RW | 0x00000000 |

# SIO Input

The SIO registers start at a base address of `0xd0000000` (defined as SIO_BASE in SDK).

| Offset | Name | Info |
|---|---|---|
| 0x000 | CPUID | Processor core identifier |
| 0x004 | GPIO_IN | Input value for GPIO pins |
| 0x008 | GPIO_HI_IN | Input value for QSPI pins |
| 0x010 | GPIO_OUT | GPIO output value |
| 0x014 | GPIO_OUT_SET | GPIO output value set |
| 0x018 | GPIO_OUT_CLR | GPIO output value clear |
| 0x01c | GPIO_OUT_XOR | GPIO output value XOR |
| 0x020 | GPIO_OE | GPIO output enable |
| 0x024 | GPIO_OE_SET | GPIO output enable set |
| 0x028 | GPIO_OE_CLR | GPIO output enable clear |

## GPIO_OE

| Bits | Description | Type | Reset |
|---|---|---|---|
| 31:30 | Reserved. | - | - |
| 29:0 | Set output enable (1/0 → output/input) for GPIO0...29.<br>Reading back gives the last value written.<br>If core 0 and core 1 both write to GPIO_OE simultaneously (or to a SET/CLR/XOR alias),<br>the result is as though the write from core 0 took place first,<br>and the write from core 1 was then applied to that intermediate result. | RW | 0x00000000 |

## GPIO_IN

| Bits | Description | Type | Reset |
|---|---|---|---|
| 31:30 | Reserved. | - | - |
| 29:0 | Input value for GPIO0...29 | RO | 0x00000000 |

```rust
use core::ptr::read_volatile;
use core::ptr::write_volatile;

const GPIO_OE: *mut u32 = 0xd000_0020 as *mut u32;
const GPIO_IN: *const u32= 0xd000_0004 as *const u32;

let value = unsafe {
    // write_volatile(GPIO_OE, !(1 << pin));
    let gpio_oe = read_volatile(GPIO_OE);
    // set bin `pin` of `gpio_oe` to 0 (input)
    gpio_oe = gpio_oe & !(1 << pin);
    write_volatile(GPIO_OE, gpio_oe);
    read_volatile(GPIO_IN) >> pin & 0b1
};
```

# SIO Input

The SIO registers start at a base address of `0xd0000000` (defined as SIO_BASE in SDK).

| Offset | Name | Info |
|---|---|---|
| 0x000 | CPUID | Processor core identifier |
| 0x004 | GPIO_IN | Input value for GPIO pins |
| 0x008 | GPIO_HI_IN | Input value for QSPI pins |
| 0x010 | GPIO_OUT | GPIO output value |
| 0x014 | GPIO_OUT_SET | GPIO output value set |
| 0x018 | GPIO_OUT_CLR | GPIO output value clear |
| 0x01c | GPIO_OUT_XOR | GPIO output value XOR |
| 0x020 | GPIO_OE | GPIO output enable |
| 0x024 | GPIO_OE_SET | GPIO output enable set |
| 0x028 | GPIO_OE_CLR | GPIO output enable clear |

## GPIO_OE_SET

| Bits | Description | Type | Reset |
|---|---|---|---|
| 31:30 | Reserved. | - | - |
| 29:0 | Perform an atomic bit-clear on GPIO_OE, i.e. `GPIO_OE &= ~wdata` | WO | 0x00000000 |

## GPIO_IN

| Bits | Description | Type | Reset |
|---|---|---|---|
| 31:30 | Reserved. | - | - |
| 29:0 | Input value for GPIO0...29 | RO | 0x00000000 |

```rust
use core::ptr::read_volatile;
use core::ptr::write_volatile;

const GPIO_OE_CLR: *mut u32= 0xd000_0028 as *mut u32;
const GPIO_IN: *const u32= 0xd000_0004 as *const u32;

let value = unsafe {
  // set bit `pin` of `GPIO_OE` to 0 (input)
    write_volatile(GPIO_OE_CLR, 1 << pin);
    read_volatile(GPIO_IN) >> pin & 0b1
};
```

# SIO Output

The SIO registers start at a base address of `0xd0000000` (defined as SIO_BASE in SDK).

| Offset | Name | Info |
|---|---|---|
| 0x000 | CPUID | Processor core identifier |
| 0x004 | GPIO_IN | Input value for GPIO pins |
| 0x008 | GPIO_HI_IN | Input value for QSPI pins |
| 0x010 | GPIO_OUT | GPIO output value |
| 0x014 | GPIO_OUT_SET | GPIO output value set |
| 0x018 | GPIO_OUT_CLR | GPIO output value clear |
| 0x01c | GPIO_OUT_XOR | GPIO output value XOR |
| 0x020 | GPIO_OE | GPIO output enable |
| 0x024 | GPIO_OE_SET | GPIO output enable set |
| 0x028 | GPIO_OE_CLR | GPIO output enable clear |

## GPIO_OE_CLR

| Bits | Description | Type | Reset |
|---|---|---|---|
| 31:30 | Reserved. | - | - |
| 29:0 | Perform an atomic bit-clear on GPIO_OE, i.e. `GPIO_OE &= ~wdata` | WO | 0x00000000 |

## GPIO_OUT

| Bits | Description | Type | Reset |
|---|---|---|---|
| 31:30 | Reserved. | - | - |
| 29:0 | Set output level (1/0 → high/low) for GPIO0…29.<br>Reading back gives the last value written, NOT the input value from the pins.<br>If core 0 and core 1 both write to GPIO_OUT simultaneously (or to a SET/CLR/XOR alias),<br>the result is as though the write from core 0 took place first,<br>and the write from core 1 was then applied to that intermediate result. | RW | 0x00000000 |

```rust
use core::ptr::read_volatile;
use core::ptr::write_volatile;

const GPIO_OE_SET: *mut u32= 0xd000_0024 as *mut u32;
const GPIO_OUT: *mut u32 = 0xd000_0010 as *mut u32;

unsafe {
  // set bit `pin` of GPIO_OE to 1 (output)
  write_volatile(GPIO_OE_SET, 1 << pin);
  // write_volatile(GPIO_OUT, (value & 0b1) << pin);
  let gpio_out = read_volatile(GPIO_OUT);
  gpio_out = gpio_out | (value & 0b1) << pin;
  write_volatile(GPIO_OUT, gpio_out);
};
```

# SIO Output

efficient

The SIO registers start at a base address of `0xd0000000` (defined as SIO_BASE in SDK).

| Offset | Name | Info |
|---|---|---|
| 0x000 | CPUID | Processor core identifier |
| 0x004 | GPIO_IN | Input value for GPIO pins |
| 0x008 | GPIO_HI_IN | Input value for QSPI pins |
| 0x010 | GPIO_OUT | GPIO output value |
| 0x014 | GPIO_OUT_SET | GPIO output value set |
| 0x018 | GPIO_OUT_CLR | GPIO output value clear |
| 0x01c | GPIO_OUT_XOR | GPIO output value XOR |
| 0x020 | GPIO_OE | GPIO output enable |
| 0x024 | GPIO_OE_SET | GPIO output enable set |
| 0x028 | GPIO_OE_CLR | GPIO output enable clear |

## GPIO_OUT_SET

| Bits | Description | Type | Reset |
|---|---|---|---|
| 31:30 | Reserved. | - | - |
| 29:0 | Perform an atomic bit-set on GPIO_OUT, i.e. `GPIO_OUT \|= wdata` | WO | 0x00000000 |

## GPIO_OUT_CLR

| Bits | Description | Type | Reset |
|---|---|---|---|
| 31:30 | Reserved. | - | - |
| 29:0 | Perform an atomic bit-clear on GPIO_OUT, i.e. `GPIO_OUT &= ~wdata` | WO | 0x00000000 |

```rust
use core::ptr::read_volatile;
use core::ptr::write_volatile;

const GPIO_OE_SET: *mut u32= 0xd000_0024 as *mut u32;
const GPIO_OUT_SET:*mut u32= 0xd000_0014 as *mut u32;
const GPIO_OUT_CLR:*mut u32= 0xd000_0018 as *mut u32;

unsafe {
    write_volatile(GPIO_OE_SET, 1 << pin);
    let reg = match value {
      0 => GPIO_OUT_CLR,
      _ => GPIO_OUT_SET
    };
    write_volatile(reg, 1 << pin);
};
```

# IO Bank

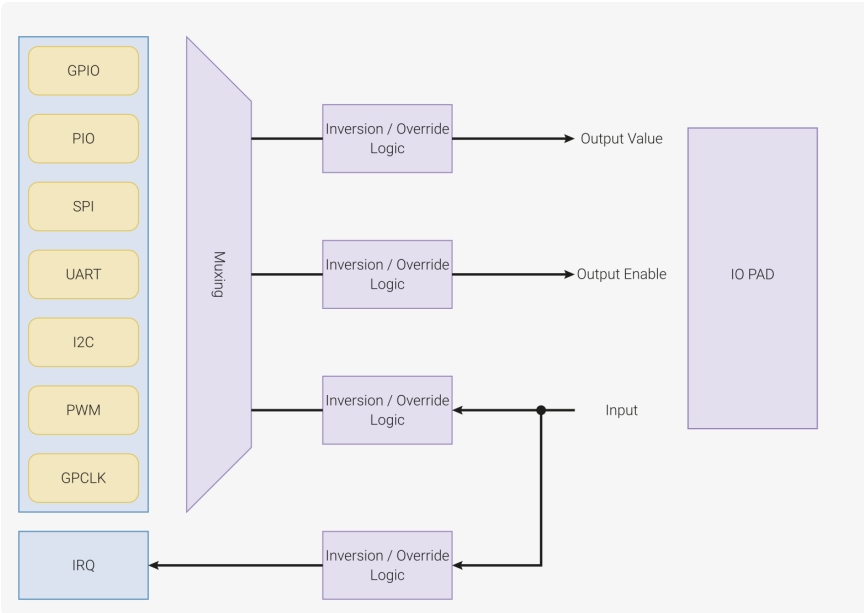


The User Bank IO registers start at a base address of `0x40014000` (defined as IO_BANK0_BASE in SDK).

| Offset | Name | Info |
|---|---|---|
| 0x000 | GPIO0_STATUS | GPIO status |
| 0x004 | GPIO0_CTRL | GPIO control including function select and overrides. |

- set `FUNCSEL` to `5` (*SIO*)

GPIOx_CTRL

Offset: 0x004, 0x00c, … 0x0ec (0x4 + 8*x)

| Bits | Name | Description | Type | Reset |
|---|---|---|---|---|
| 31:30 | Reserved. | - | - | - |
| 29:28 | IRQOVER | 0x0 → don't invert the interrupt<br>0x1 → invert the interrupt<br>0x2 → drive interrupt low<br>0x3 → drive interrupt high | RW | 0x0 |
| 27:18 | Reserved. | - | - | - |
| 17:16 | INOVER | 0x0 → don't invert the peri input<br>0x1 → invert the peri input<br>0x2 → drive peri input low<br>0x3 → drive peri input high | RW | 0x0 |
| 15:14 | Reserved. | - | - | - |
| 13:12 | OEOVER | 0x0 → drive output enable from peripheral signal selected by funcsel<br>0x1 → drive output enable from inverse of peripheral signal selected by funcsel<br>0x2 → disable output<br>0x3 → enable output | RW | 0x0 |
| 11:10 | Reserved. | - | - | - |
| 9:8 | OUTOVER | 0x0 → drive output from peripheral signal selected by funcsel<br>0x1 → drive output from inverse of peripheral signal selected by funcsel<br>0x2 → drive output low<br>0x3 → drive output high | RW | 0x0 |
| 7:5 | Reserved. | - | - | - |
| 4:0 | FUNCSEL | Function select. 31 == NULL. See GPIO function table for available functions. | RW | 0x1f |

# IO Bank Input

The User Bank IO registers start at a base address of `0x40014000` (defined as IO_BANK0_BASE in SDK).

| Offset | Name | Info |
|---|---|---|
| 0x000 | GPIO0_STATUS | GPIO status |
| 0x004 | GPIO0_CTRL | GPIO control including function select and overrides. |

```rust
use core::ptr::read_volatile;
use core::ptr::write_volatile;

const GPIOX_CTRL: u32 = 0x4001_4004;
const GPIO_OE_CLR: *mut u32= 0xd000_0028 as *mut u32;
const GPIO_IN: *const u32= 0xd000_0004 as *const u32;

let gpio_ctrl = (GPIOX_CTRL + 8 * pin) as *mut u32;

let value = unsafe {
    write_volatile(gpio_ctrl, 5);
    write_volatile(GPIO_OE_CLR, 1 << pin);
    read_volatile(GPIO_IN) >> pin & 0b1
};
```

## GPIOx_CTRL

## Offset: 0x004, 0x00c, ... 0x0ec (0x4 + 8*x)

| Bits | Name | Description | Type | Reset |
|---|---|---|---|---|
| 31:30 | Reserved. | - | - | - |
| 29:28 | IRQOVER | 0x0 → don't invert the interrupt<br>0x1 → invert the interrupt<br>0x2 → drive interrupt low<br>0x3 → drive interrupt high | RW | 0x0 |
| 27:18 | Reserved. | - | - | - |
| 17:16 | INOVER | 0x0 → don't invert the peri input<br>0x1 → invert the peri input<br>0x2 → drive peri input low<br>0x3 → drive peri input high | RW | 0x0 |
| 15:14 | Reserved. | - | - | - |
| 13:12 | OEOVER | 0x0 → drive output enable from peripheral signal selected by funcsel<br>0x1 → drive output enable from inverse of peripheral signal selected by funcsel<br>0x2 → disable output<br>0x3 → enable output | RW | 0x0 |
| 11:10 | Reserved. | - | - | - |
| 9:8 | OUTOVER | 0x0 → drive output from peripheral signal selected by funcsel<br>0x1 → drive output from inverse of peripheral signal selected by funcsel<br>0x2 → drive output low<br>0x3 → drive output high | RW | 0x0 |
| 7:5 | Reserved. | - | - | - |
| 4:0 | FUNCSEL | Function select. 31 == NULL. See GPIO function table for available functions. | RW | 0x1f |

# IO Bank Output

The User Bank IO registers start at a base address of `0x40014000` (defined as IO_BANK0_BASE in SDK).

| Offset | Name | Info |
|---|---|---|
| 0x000 | GPIO0_STATUS | GPIO status |
| 0x004 | GPIO0_CTRL | GPIO control including function select and overrides. |

```rust
use core::ptr::read_volatile;
use core::ptr::write_volatile;

const GPIOX_CTRL: u32 = 0x4001_4004;
const GPIO_OE_SET: *mut u32= 0xd000_0024 as *mut u32;
const GPIO_OUT_SET:*mut u32= 0xd000_0014 as *mut u32;
const GPIO_OUT_CLR:*mut u32= 0xd000_0018 as *mut u32;

let gpio_ctrl = (GPIOX_CTRL + 8 * pin) as *mut u32;
unsafe {
    write_volatile(gpio_ctrl, 5);
    write_volatile(GPIO_OE_SET, 1 << pin);
    let reg = match value {
      0 => GPIO_OUT_CLR,
      _ => GPIO_OUT_SET
    };
    write_volatile(reg, 1 << pin);
};
```

## GPIOx_CTRL

## Offset: 0x004, 0x00c, … 0x0ec (0x4 + 8*x)

| Bits | Name | Description | Type | Reset |
|---|---|---|---|---|
| 31:30 | Reserved. | - | - | - |
| 29:28 | IRQOVER | 0x0 → don't invert the interrupt<br>0x1 → invert the interrupt<br>0x2 → drive interrupt low<br>0x3 → drive interrupt high | RW | 0x0 |
| 27:18 | Reserved. | - | - | - |
| 17:16 | INOVER | 0x0 → don't invert the peri input<br>0x1 → invert the peri input<br>0x2 → drive peri input low<br>0x3 → drive peri input high | RW | 0x0 |
| 15:14 | Reserved. | - | - | - |
| 13:12 | OEOVER | 0x0 → drive output enable from peripheral signal selected by funcsel<br>0x1 → drive output enable from inverse of peripheral signal selected by funcsel<br>0x2 → disable output<br>0x3 → enable output | RW | 0x0 |
| 11:10 | Reserved. | - | - | - |
| 9:8 | OUTOVER | 0x0 → drive output from peripheral signal selected by funcsel<br>0x1 → drive output from inverse of peripheral signal selected by funcsel<br>0x2 → drive output low<br>0x3 → drive output high | RW | 0x0 |
| 7:5 | Reserved. | - | - | - |
| 4:0 | FUNCSEL | Function select. 31 == NULL. See GPIO function table for available functions. | RW | 0x1f |

# Pad Control

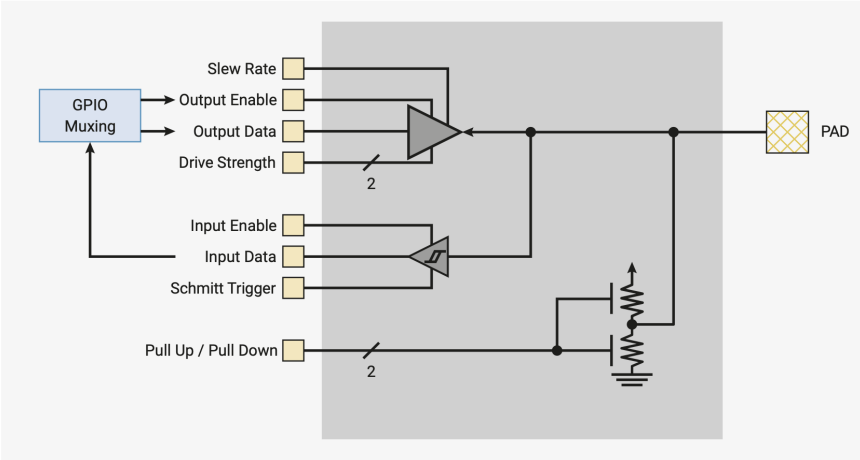


The User Bank Pad Control registers start at a base address of `0x4001c000` (defined as PADS_BANK0_BASE in SDK).

| Offset | Name | Info |
|---|---|---|
| 0x00 | VOLTAGE_SELECT | Voltage select. Per bank control |
| 0x04 | GPIO0 | Pad control register |
| 0x08 | GPIO1 | Pad control register |
| 0x0c | GPIO2 | Pad control register |
| 0x10 | GPIO3 | Pad control register |
| 0x14 | GPIO4 | Pad control register |
| 0x18 | GPIO5 | Pad control register |

GPIOx Register

Offset: 0x004, 0x008, ... 0x078 (0x4 + 4*x)

| Bits | Name | Description | Type | Reset |
|---|---|---|---|---|
| 31:8 | Reserved. | - | - | - |
| 7 | OD | Output disable. Has priority over output enable from peripherals | RW | 0x0 |
| 6 | IE | Input enable | RW | 0x1 |

| Bits | Name | Description | Type | Reset |
|---|---|---|---|---|
| 5:4 | DRIVE | Drive strength.<br>0x0 → 2mA<br>0x1 → 4mA<br>0x2 → 8mA<br>0x3 → 12mA | RW | 0x1 |
| 3 | PUE | Pull up enable | RW | 0x0 |
| 2 | PDE | Pull down enable | RW | 0x1 |
| 1 | SCHMITT | Enable schmitt trigger | RW | 0x1 |
| 0 | SLEWFAST | Slew rate control. 1 = Fast, 0 = Slow | RW | 0x0 |

# Input

read the value from pin `x`

- set the `FUNCSEL` field of `GPIOx_CTRL` to `5`
- set the `GPIO_OE_CLR` bit `x` to `1`
- read the `GPIO_IN` bit `x`
- *adjust the `GPIOx` fields to set the pull up/down resistor*

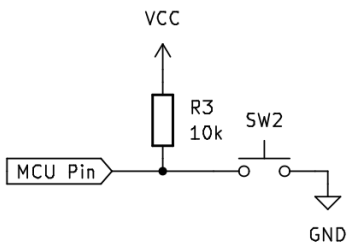


# Output

write a value to pin `x`

- set the `FUNCSEL` field of `GPIOx_CTRL` to `5`
- set the `GPIO_OE_SET` bit `x` to `1`
- if the value
  - is `0`, set the `GPIO_OUT_CLR` bit `x` to `1`
  - is `1`, set the `GPIO_OUT_SET` bit `x` to `1`
- *adjust the `GPIOx` fields to set the output current*

# Rust Embedded HAL

The Rust API for embedded systems

# The Rust Embedded Stack

| | |
|---|---|
| Framework | Tasks, Memory Management, Network etc. `embassy-rs`, `rtic` |
| BSC | Board Support Crate `embassy-rp`, `rp-pico` |
| *HAL Implementation* | Uses the PAC and exports a standard HAL towards the upper levels `embassy-rp` |
| PAC | Accesses registers, usually created automatically from SVD files - `rp2040_pac`, `rp-pac` |

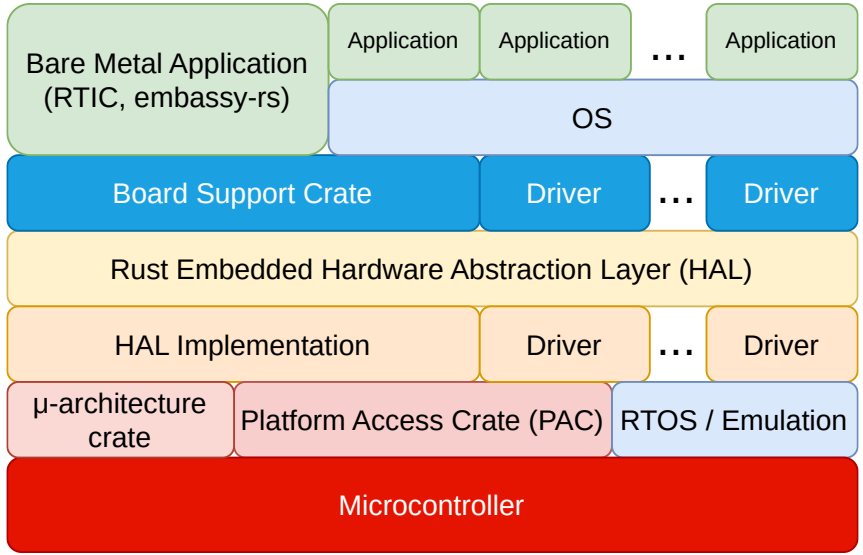

# GPIO HAL

A set of standard traits

All devices should implement these traits for GPIO.

```
pub enum PinState {
    Low,
    High,
}
```

Input

```
pub trait InputPin: ErrorType {
  // Required methods
  fn is_high(&mut self) -> Result<bool, Self::Error>;
  fn is_low(&mut self) -> Result<bool, Self::Error>;
}
```

Output

```
pub trait OutputPin: ErrorType {
  // Required methods
  fn set_low(&mut self) -> Result<(), Self::Error>;
  fn set_high(&mut self) -> Result<(), Self::Error>;

  // Provided method
  fn set_state(&mut self, state: PinState) -> Result<(), Sel
}
```

# Bare metal

This is how a Rust application would look like

```rust
#![no_std]
#![no_main]

use cortex_m_rt::entry;

#[entry]
fn main() -> ! {
    // your code goes here

    loop { }
}

#[panic_handler]
pub fn panic(_info: &PanicInfo) -> ! {
    loop { }
}
```

## Rules

1. never exit the `main` function
2. add a panic handler that does not exit

# Bare metal without PAC & HAL

This is how a Rust application would look like

```rust
#![no_std]
#![no_main]

use core::ptr::{read_volatile, write_volatile};
use cortex_m_rt::entry;

const GPIOX_CTRL: u32 = 0x4001_4004;
const GPIO_OE_SET: *mut u32= 0xd000_0024 as *mut u32;
const GPIO_OUT_SET:*mut u32= 0xd000_0014 as *mut u32;
const GPIO_OUT_CLR:*mut u32= 0xd000_0018 as *mut u32;

#[panic_handler]
pub fn panic(_info: &PanicInfo) -> ! {
    loop { }
}
```

```rust
#[entry]
fn main() -> ! {
    let gpio_ctrl = GPIOX_CTRL + 8 * pin as *mut u32;
    unsafe {
        write_volatile(gpio_ctrl, 5);
        write_volatile(GPIO_OE_SET, 1 << pin);
        let reg = match value {
        0 => GPIO_OUT_CLR,
        _ => GPIO_OUT_SET
        };
        write_volatile(reg, 1 << pin);
    };

    loop { }
}
```

# embassy-rs

Embedded Asynchronous

# embassy-rs

- framework
- uses the rust-embedded-hal
- Features
  - Real-time
  - Low power
  - Networking
  - Bluetooth
  - USB
  - Bootloader and DFU

# GPIO Input

```rust
#![no_std]
#![no_main]

use embassy_executor::Spawner;
use embassy_rp::gpio;
use gpio::{Input, Pull};

#[embassy_executor::main]
async fn main(_spawner: Spawner) {
    let p = embassy_rp::init(Default::default());
    let pin = Input::new(p.PIN_3, Pull:Up);

    if pin.is_high() {

    } else {

    }
}
```

The `main` function is called by the embassy-rs framework, so it can exit.

# GPIO Output

```rust
#![no_std]
#![no_main]

use embassy_executor::Spawner;
use embassy_rp::gpio;
use gpio::{Level, Output};

#[embassy_executor::main]
async fn main(_spawner: Spawner) {
    let p = embassy_rp::init(Default::default());
    let mut pin = Output::new(p.PIN_2, Level::Low);

    pin.set_high();
}
```

The `main` function is called by the embassy-rs framework, so it can exit.

# Conclusion

we talked about

- Memory Mapped IO
- RP2040 GPIO
  - Single Cycle IO
  - IO Bank
  - Pad
- The Rust embedded standard stack
- Bare metal Rust
- The embassy-rs framework