UART & SPI

Lecture 6

UART & SPI

used by RP2040

- Direct Memory Access
- Buses
  - Universal Asynchronous Receiver and Transmitter
  - Serial Peripheral Interface
- Analog and Digital Sensors

DMA

Direct Memory Access

Bibliography

for this section

Raspberry Pi Ltd, *RP2040 Datasheet*

- Chapter 2 - *System Description*
  - Chapter 2.5 - *DMA*

DMA

- offloads the MCU from doing **memory to memory** operations
- due to MMIO, usually implies **transfers from and to peripherals**
- raises an interrupt when a transfer is done

⚠ DMA does not know about the data stored in cache.

- for chips that use cache
  - the DMA buffer's memory region has to be set manually to *nocache* (if MCU knows)
  - or, the cache has to be flushed before and, possibly after, a DMA transfer

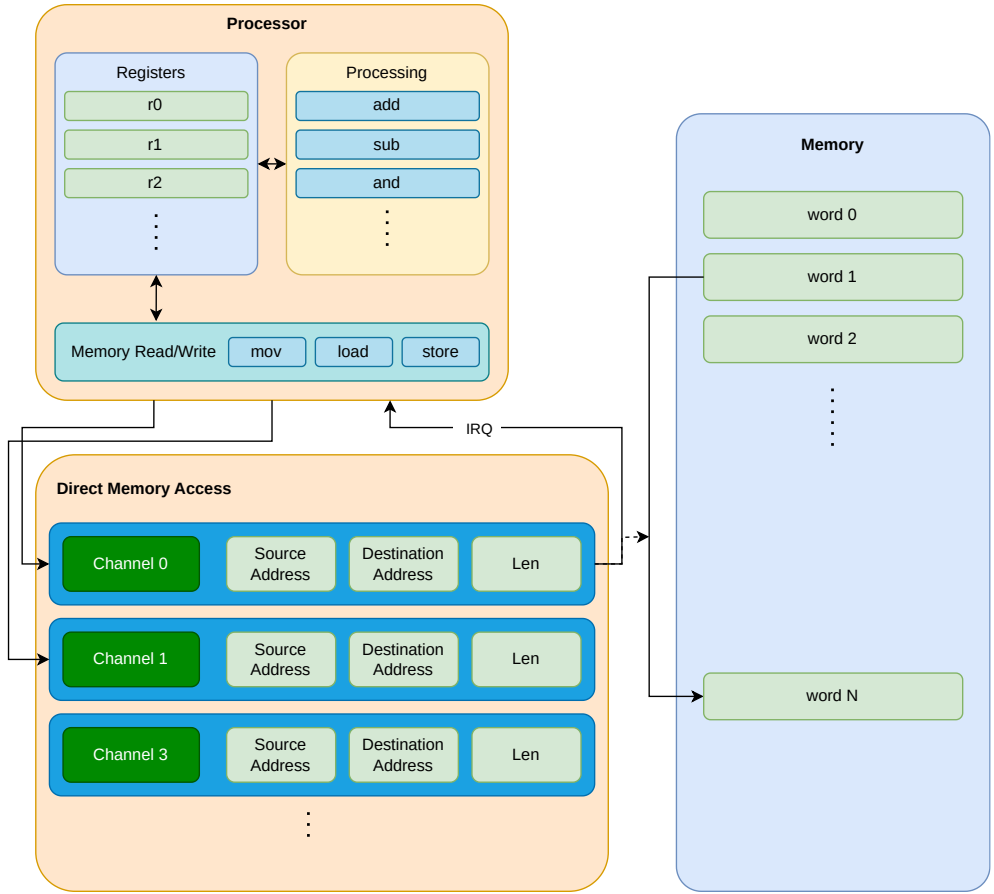

UART

Universal Asynchronous Receiver and Transmitter

Bibliography

for this section

1. **Raspberry Pi Ltd**, *RP2040 Datasheet*
   - Chapter 4 - *Peripherals*
     - Chapter 4.2 - *UART*
2. **Paul Denisowski**, *Understanding Serial Protocols*
3. **Paul Denisowski**, *Understanding UART*

UART

aka serial port

- connects **two devices**
- uses two **independent** wires
  - *TX* - transmission wire
  - *RX* - reception wire
- cross-connected

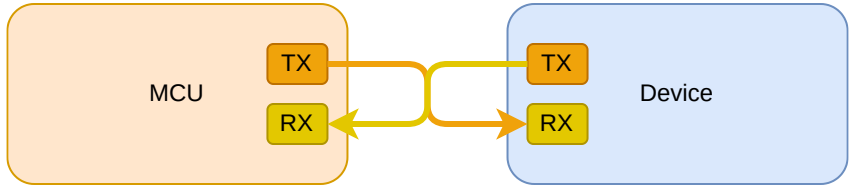

Transmission example

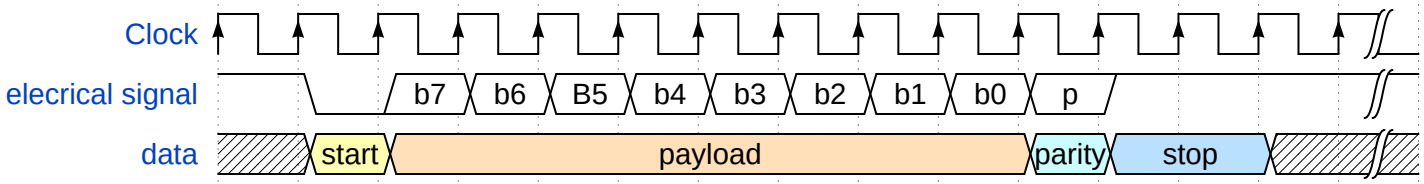

UART Device

properties

bits	the number of bits in the payload, between 5 and 9
parity	add or not the parity bit
stop	the number of stop bits to add, 1 or 2
baud rate	number of elements sent per s, most used **9600** or **115200**

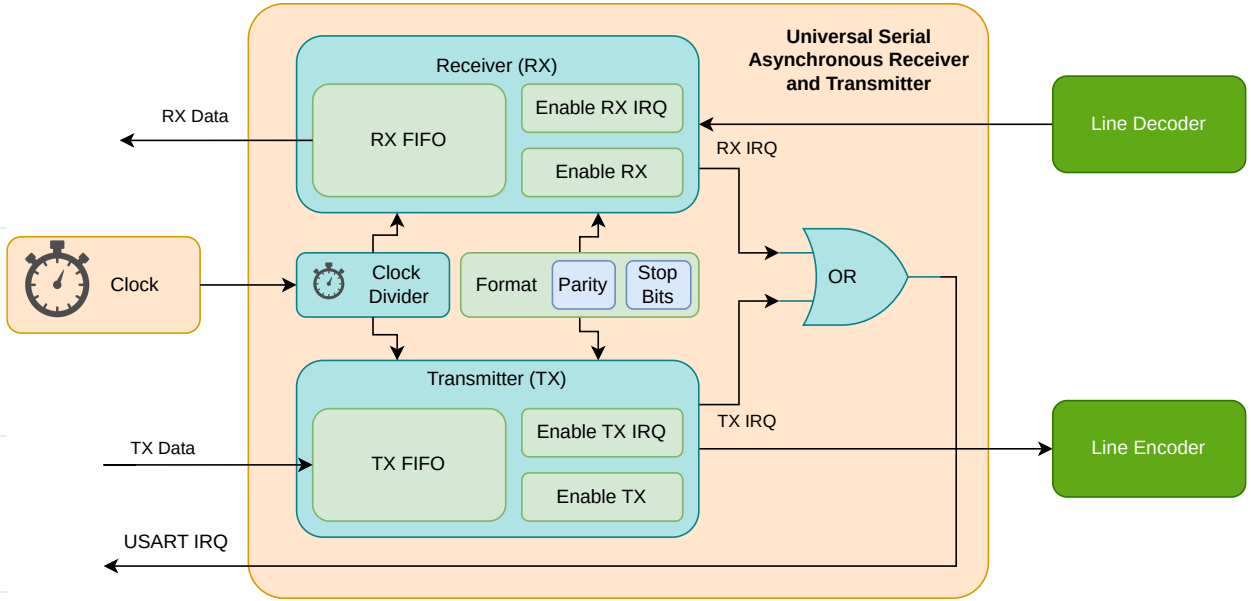

$$baud_{rate} = \frac{f_{clock}}{divider \times (1 + payload_{bits} + parity_{bits} + stop_{bits})}$$

UART Device

types

- **TTL** - *Transistor Transistor Logic* connects devices at 0 - 3.3V or 0 - 5V, used for short cables and jumper wires
- **RS232** - used for external connections and longer cables, uses -12V to 12V.
- **RS485** - industrial, uses differential voltage

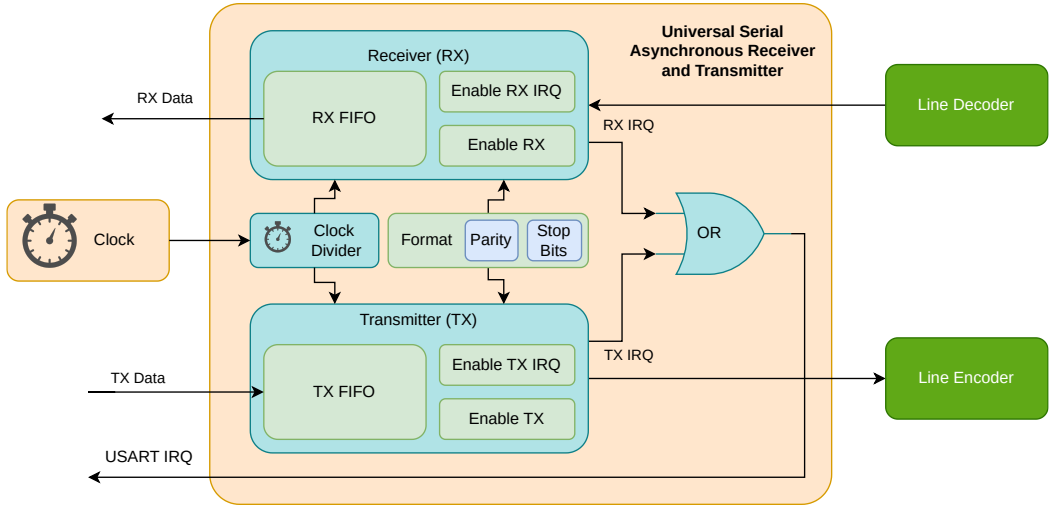

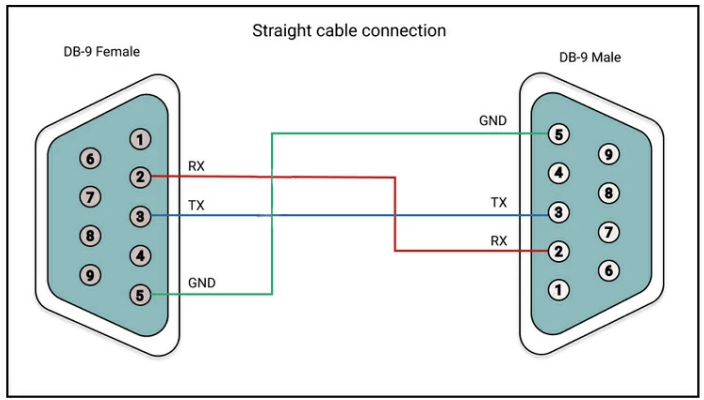

Receiver

RX part of the serial port

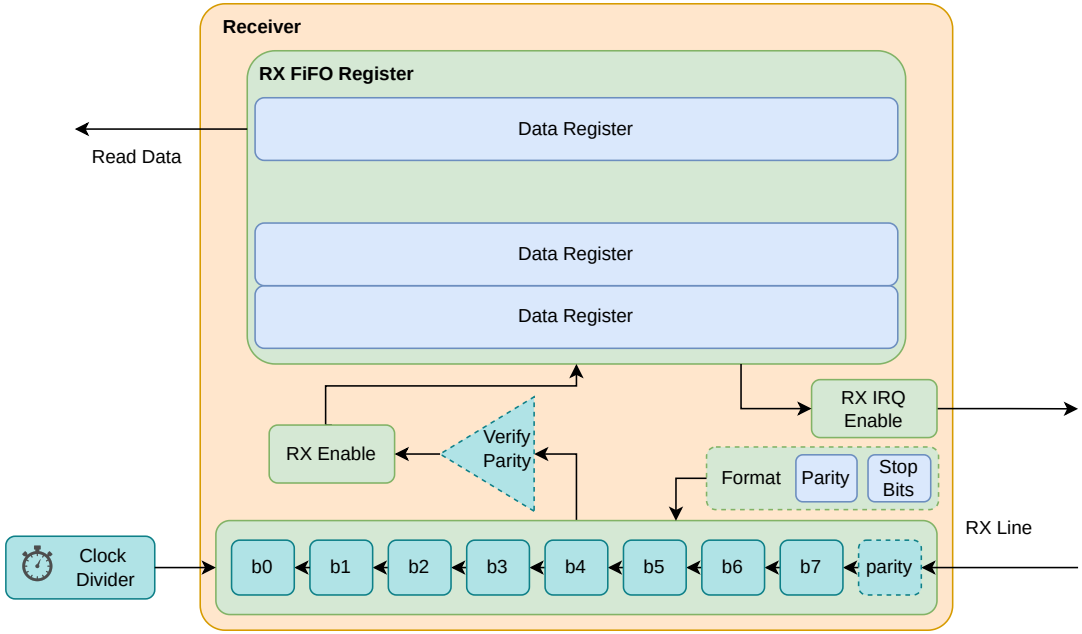

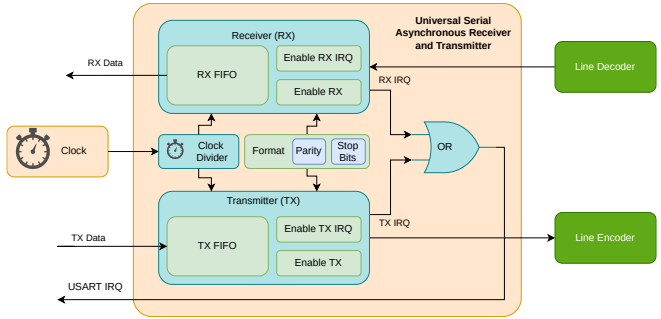

- *Shift Register* to read **serially every bit**
- Triggers an interrupt
  - when data was received
  - (*optional*) when FIFO is half full
  - (*optional*) when FIFO is full
- FIFO is optional
  - may have a capacity of 1

Transmitter

TX part of the serial port

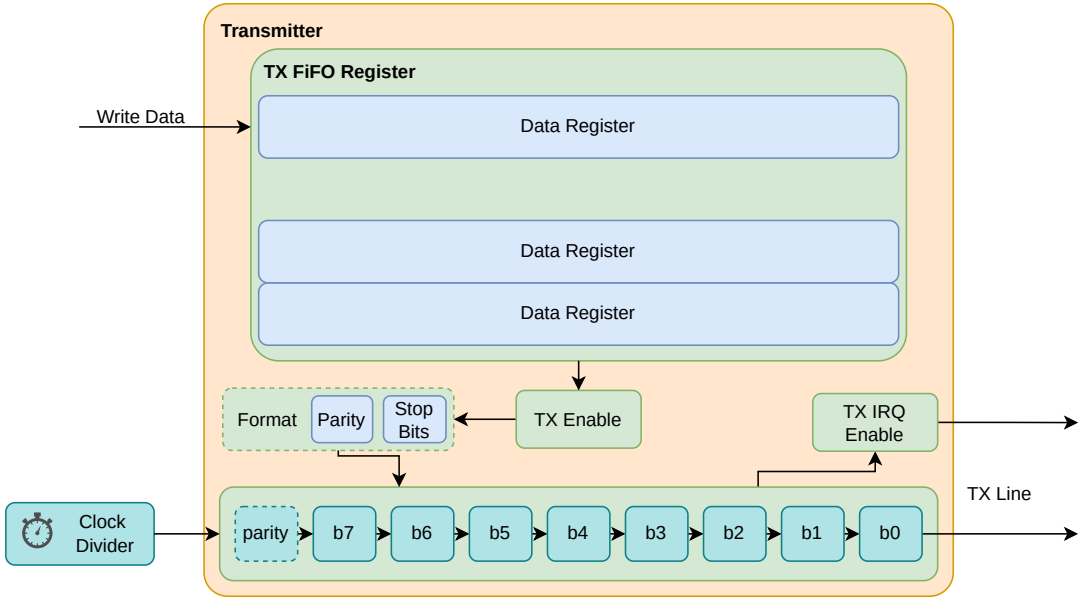

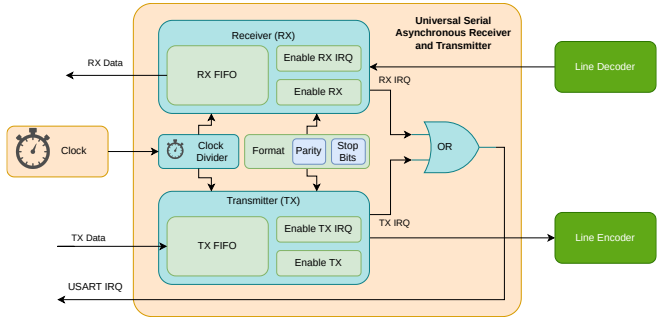

- *Shift Register* to output **serially every bit**
- Triggers an interrupt
  - when data was sent
  - (*optional*) when FIFO is half empty
  - (*optional*) when FIFO is empty
- FIFO is optional
  - may have a capacity of 1

Transmission Examples

Setup	Payload	Parity	Stop
8N1	8 bits	no	1 bit
8P2	8 bits	yes	2 bits
9P1	9 bits	yes	1 bit

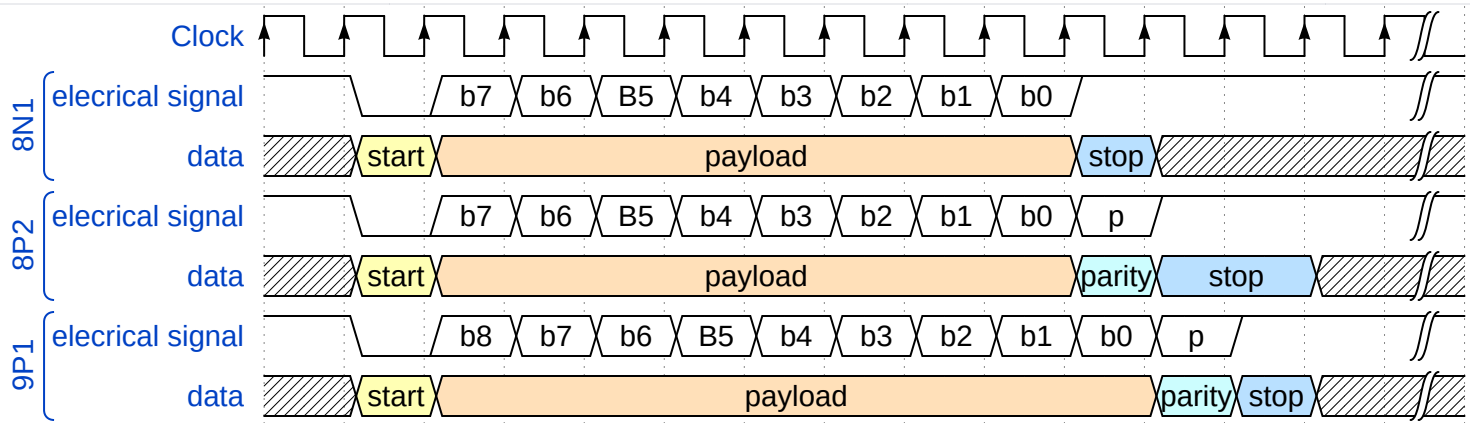

Successive Transmission

using the 8N1 data format

Back to back

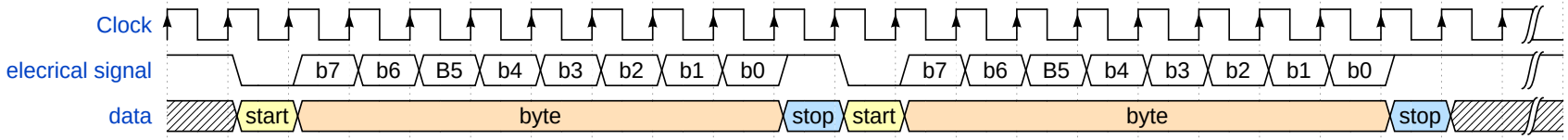

With delay

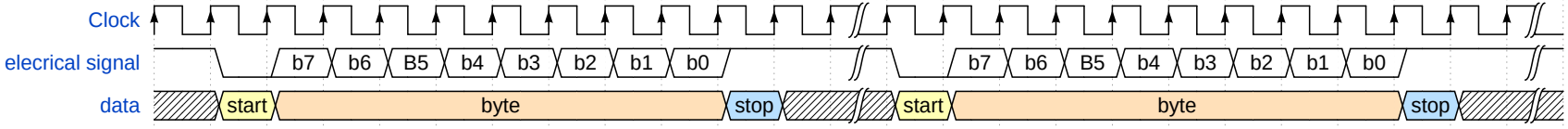

Facts

Transmission	*duplex*	data can be sent in both directions at the same time
Clock	*independent*	there is no clock sent between the two devices, the **receiver** has to **synchronize its clock with the transmitter** to be able to correctly read the received data
Wires	*RX / TX*	one receive write, one transmit wire, independent of each other
Devices	*2*	a receiver and a transmitter
Speed	*115 KB/s*	usually a maximum baud rate of 115200 is used

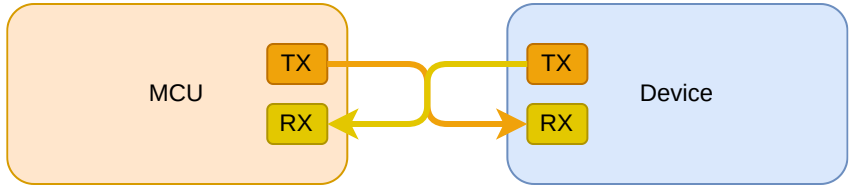

Usage

- print debug information
- device console
- RP2040 has two USART devices

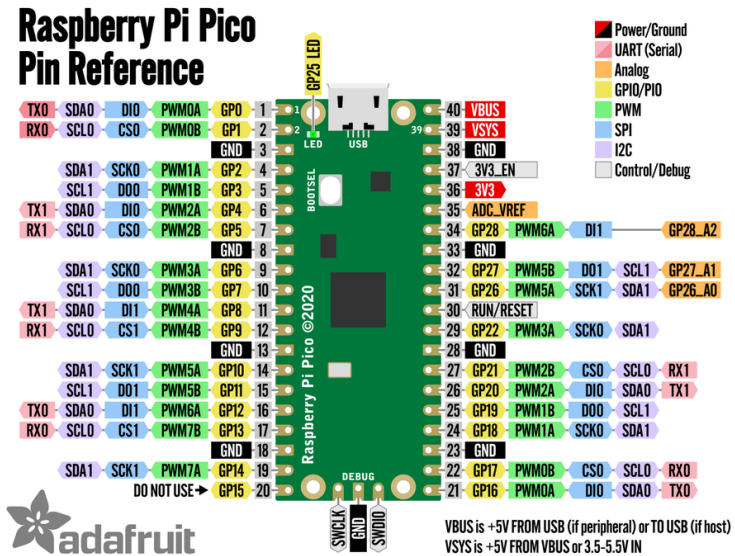

Embassy API

for RP2040, synchronous

```rust
pub struct Config {
  pub baudrate: u32,
  pub data_bits: DataBits,
  pub stop_bits: StopBits,
  pub parity: Parity,
  pub invert_tx: bool,
  pub invert_rx: bool,
  pub invert_rts: bool,
  pub invert_cts: bool,
}
```

```rust
pub enum DataBits {
  DataBits5,
  DataBits6,
  DataBits7,
  DataBits8,
}
```

```rust
pub enum StopBits {
  STOP1,
  STOP2,
}
```

```rust
pub enum Parity {
  ParityNone,
  ParityEven,
  ParityOdd,
}
```

```rust
use embassy_rp::uart::Config as UartConfig;
let config = UartConfig::default();

// use UART0, Pins 0 and 1
let mut uart = uart::Uart::new_blocking(p.UART0, p.PIN_0, p.PIN_1, config);
// write
uart.blocking_write("Hello World!\r\n".as_bytes());

// read 5 bytes
let mut buf = [0; 5];
uart.blocking_read(&mut buf);
```

Embassy API

for RP2040, asynchronous

```rust
use embassy_rp::uart::Config as UartConfig;

bind_interrupts!(struct Irqs {
    UART0_IRQ => BufferedInterruptHandler<UART0>;
});

let config = UartConfig::default();

// use UART0, Pins 0 and 1
let mut uart = uart::Uart::new(p.UART0, p.PIN_0, p.PIN_1, Irqs, p.DMA_CH0, p.DMA_CH1, config);

// write
uart.write("Hello World!\r\n".as_bytes()).await;

// read 5 bytes
let mut buf = [0; 5];
uart.read(&mut buf).await;
```

SPI

Serial Peripheral Interface

Bibliography

for this section

1. **Raspberry Pi Ltd**, *RP2040 Datasheet*
   - Chapter 4 - *Peripherals*
     - Chapter 4.4 - *SPI*
2. **Paul Denisowski**, *Understanding SPI*

SPI

a.k.a *spy*

- Used for communication between integrated circuits
- Sensors usually expose an *SPI* and an *I2C* interface
- Two device types:
  - *main* (master) - controls the communication (usually MCU)
  - *sub* (slave) - receive and transmit data when the *main* requests (usually the sensor)

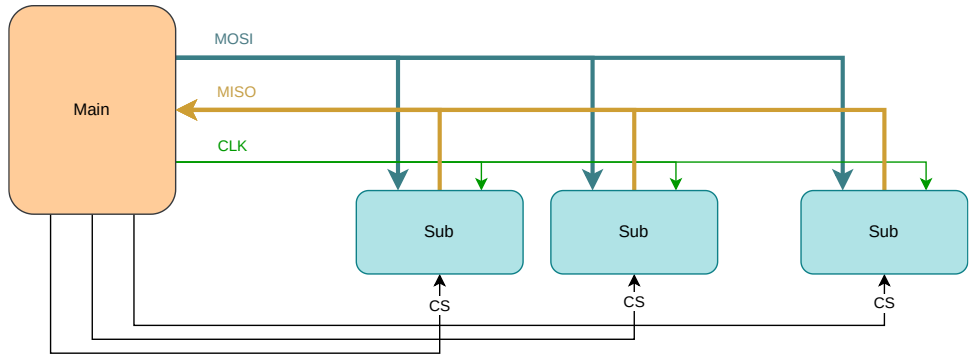

Wires

3 + n

- *MOSI* - **M**ain **O**ut **S**ub **I**n - carries data from the **main** to the **subs**
- *MISO* - **M**ain **I**n **S**ub **O**ut - carries data from the active **sub** to the **main**
- *CLK* - Clock - the clock signal generated by the **main**, **subs** sample and write data to the bus only on the clock edge
- *CS** - **C**hip **S**elect - not actually part of SPI, one wire / sub, activates **one sub at a time**
  - inactive subs have to disconnect from the *MOSI* and *MISO* lines

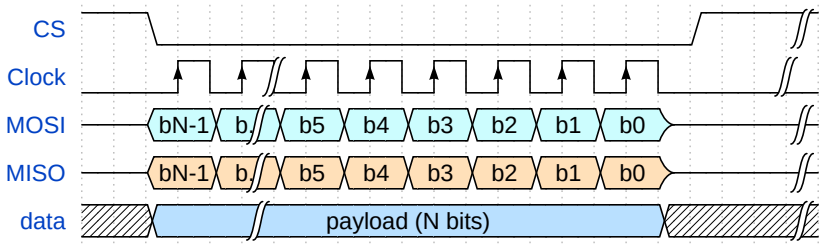

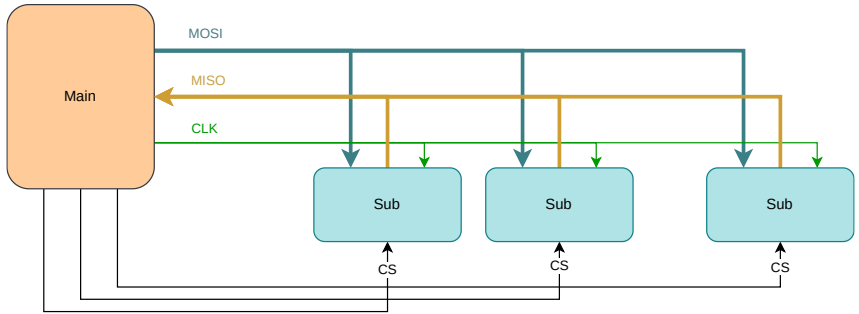

Transmission Example

1. **main** activates the sub device
   - sets the `CS` signal to `LOW`
2. at the same time
   - **main** puts the first bit on the `MOSI` line
   - **sub** puts the first bit on the `MISO` line
3. **main** starts the clock
4. at the *rising edge*
   - **main** reads the data from the `MISO` line
   - **sub** reads the data from the `MOSI` line
5. on the *falling edge*
   - **main** puts the next bit on the `MOSI` line
   - **sub** puts the next bit on the `MISO` line
6. repeat 4 and 5 until **main** decides to stop the clock

SPI Signals

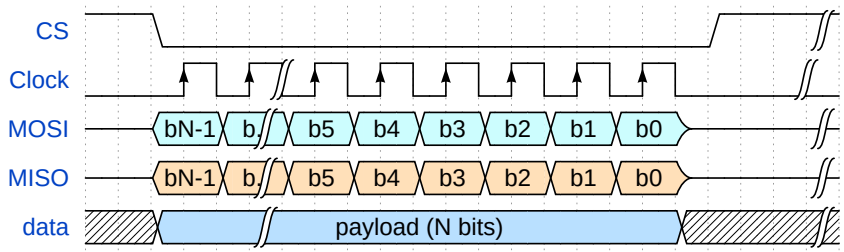

SPI Network

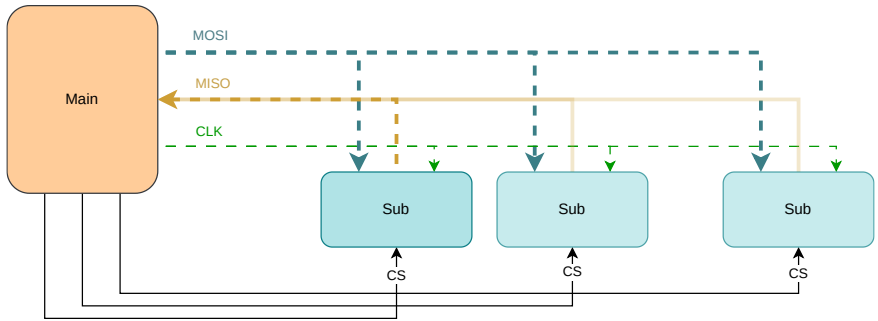

SPI Modes

when data is read and written

Mode	`CPOL`	`CPHA`
0	0	0
1	0	1
2	1	0
3	1	1

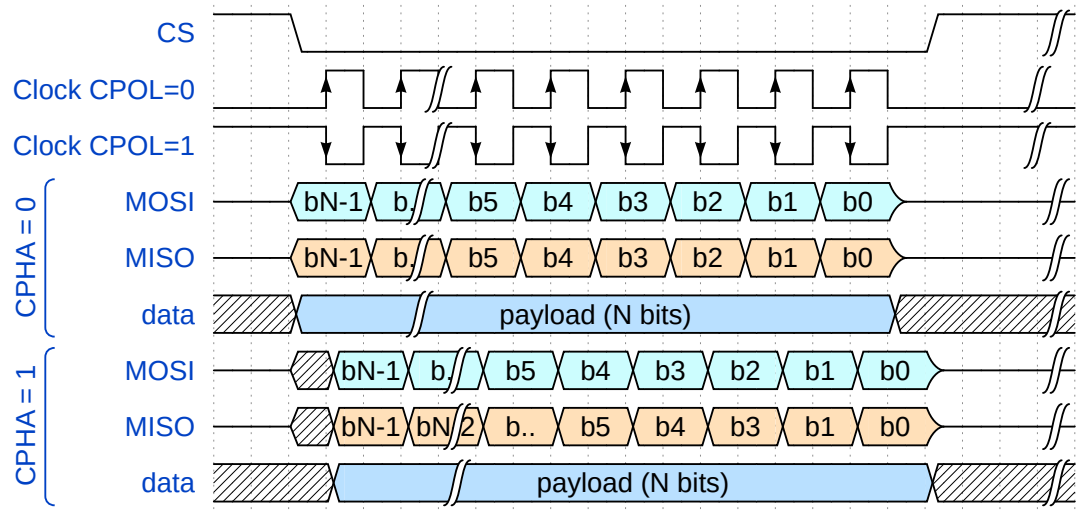

`CPOL`	Clock polarity	defines when the data bit is read 0: *rising edge* 1: *falling edge*
`CPHA`	Clock phase	defines when the data is written to the line 0: when `CS` *activates* or *clock edge* 1: on *clock edge* (depends on `CPOL`)

Transmission Example

one main, two subs

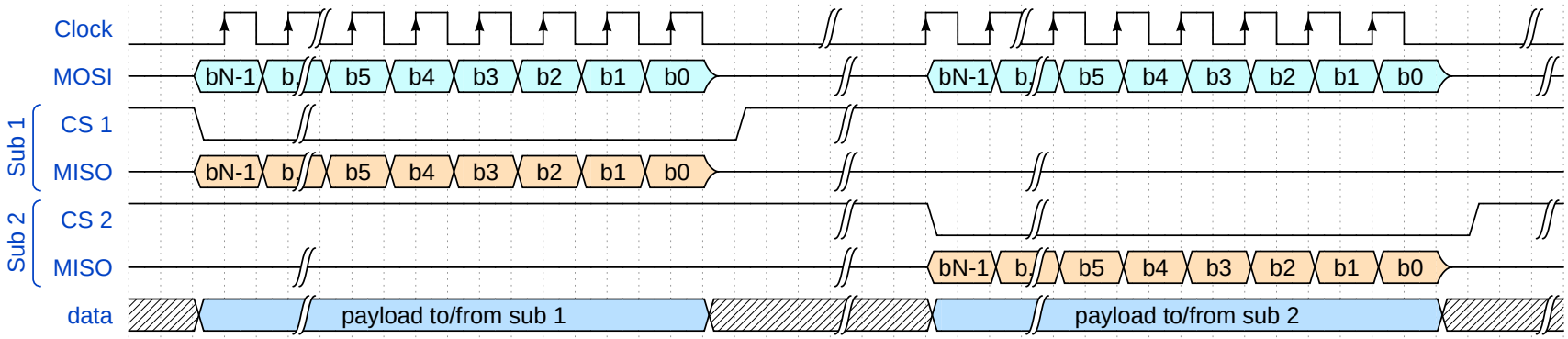

1. **main** activates the CS pin of **sub 1**
2. **main** writes the first bit on MOSI, **sub 1** writes the first bit on MISO
3. **main** starts the clock
4. **main** and **sub 1** send the rest of the bits
5. **main** stops the clock
6. **main** deactivates the CS pin of **sub 1**
7. **main** activates the CS pin of **sub 2**
8. **main** writes the first bit on MOSI, **sub 2** writes the first bit on MISO
9. **main** starts the clock
10. **main** and **sub 2** send the rest of the bits
11. **main** stops the clock
12. **main** deactivates the CS pin of **sub 2**

Daisy Chaining

using several SPI devices together

1. **main** activates all the **subs**
2. on the clock edge
   - **main** sends data to **sub 1**
   - **sub 1**[1] sends data to **sub 2**
   - ...
   - **sub n-1** sends data to **sub n**
   - **sub n** sends data to **main**

---

1. usually **subs** send the previous data bit received from **main** to the **next sub** ↩

activate all the **sub** devices

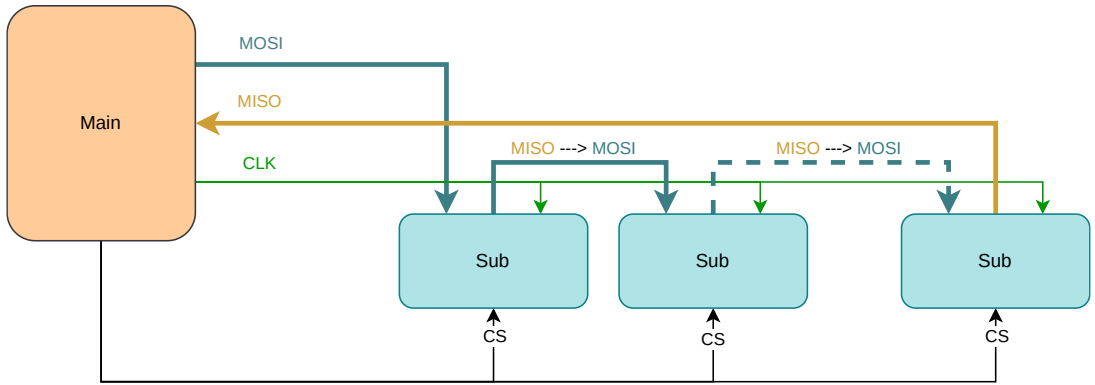

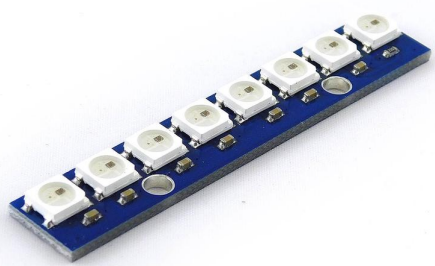

Facts

Transmission	*duplex*	data must be sent in both directions at the same time
Clock	*synchronized*	the **main** and **sub** use the same clock, there is no need for clock synchronization
Wires	*MISO / MOSI / CLK / CS*	different read and write wires, a clock wire and an *optional* chip select wire for every sub
Devices	*1 main* *several subs*	a receiver and a transmitter
Speed	*no limit*	does not have any limit, it is limited by the **main** clock and the electronics wirings

Usage

- EEPROMs / Flash (usually in *QSPI* mode)
  - Raspberry Pi Pico has its 2MB Flash connected using *QSPI*
- sensors
- small displays
- RP2040 has two SPI devices

Embassy API

for RP2040, synchronous

```rust
pub struct Config {
  pub frequency: u32,
  pub phase: Phase,
  pub polarity: Polarity,
}
```

```rust
pub enum Phase {
  CaptureOnFirstTransition,
  CaptureOnSecondTransition,
}
```

```rust
pub enum Polarity {
  IdleLow,
  IdleHigh,
}
```

```rust
use embassy_rp::spi::Config as SpiConfig;
let mut config = SpiConfig::default();
config.frequency = 2_000_000;

let miso = p.PIN_12;
let mosi = p.PIN_11;
let clk = p.PIN_10;
let mut spi = Spi::new_blocking(p.SPI1, clk, mosi, miso, config);

// Configure CS
let mut cs = Output::new(p.PIN_X, Level::Low);

cs.set_low();
let mut buf = [0x90, 0x00, 0x00, 0xd0, 0x00, 0x00];
spi.blocking_transfer_in_place(&mut buf);
cs.set_high();
```

Embassy API

for RP2040, asynchronous

```rust
use embassy_rp::spi::Config as SpiConfig;
let mut config = SpiConfig::default();
config.frequency = 2_000_000;

let miso = p.PIN_12;
let mosi = p.PIN_11;
let clk = p.PIN_10;
let mut spi = Spi::new(p.SPI1, clk, mosi, miso, p.DMA_CH0, p.DMA_CH1, config);

// Configure CS
let mut cs = Output::new(p.PIN_X, Level::Low);

cs.set_low();
let tx_buf = [1_u8, 2, 3, 4, 5, 6];
let mut rx_buf = [0_u8; 6];
spi.transfer(&mut rx_buf, &tx_buf).await;
cs.set_high();
```

Sensors

Analog and Digital Sensors

Bibliography

for this section

BOSCH, *BMP280 Digital Pressure Sensor*

- Chapter 3 - *Functional Description*
- Chapter 4 - *Global memory map and register description*
- Chapter 5 - *Digital Interfaces*
  - Subchapter 5.3 - *SPI Interface*

Sensors

analog and digital

Analog

- only the transducer (the analog sensor)
- outputs (usually) voltage
- requires:
  - an ADC to be read
  - cleaning up the noise

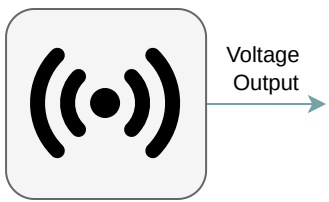

Digital

- consists of:
  - a transducer (the analog sensor)
  - an ADC
  - an MCU for cleaning up the noise
- outputs data using a digital bus

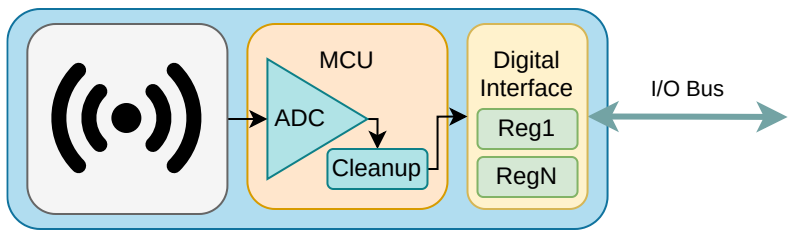

BMP280 Digital Pressure Sensor

schematics

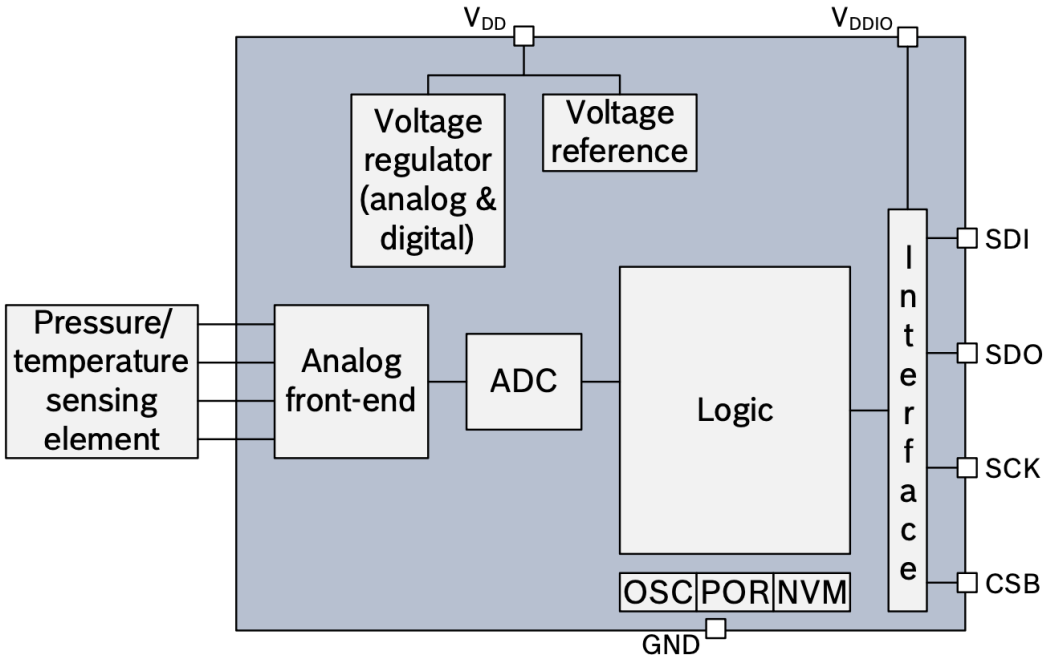

Datasheet

BMP280 Digital Pressure Sensor

registers map

Register Name	Address	bit7	bit6	bit5	bit4	bit3	bit2	bit1	bit0	Reset state
temp_xlsb	0xFC	temp_xlsb<7:4>				0	0	0	0	0x00
temp_lsb	0xFB	temp_lsb<7:0>								0x00
temp_msb	0xFA	temp_msb<7:0>								0x80
press_xlsb	0xF9	press_xlsb<7:4>				0	0	0	0	0x00
press_lsb	0xF8	press_lsb<7:0>								0x00
press_msb	0xF7	press_msb<7:0>								0x80
config	0xF5	t_sb[2:0]			filter[2:0]				spi3w_en[0]	0x00
ctrl_meas	0xF4	osrs_t[2:0]			osrs_p[2:0]			mode[1:0]		0x00
status	0xF3					measuring[0]			im_update[0]	0x00
reset	0xE0	reset[7:0]								0x00
id	0xD0	chip_id[7:0]								0x58
calib25...calib00	0xA1…0x88	calibration data								individual

Registers:	Reserved registers	Calibration data	Control registers	Data registers	Status registers	Revision	Reset
Type:	do not write	read only	read / write	read only	read only	read only	write only

Datasheet

Reading from a digital sensor

using synchronous/asynchronous SPI to read the `press_lsb` register of BMP280

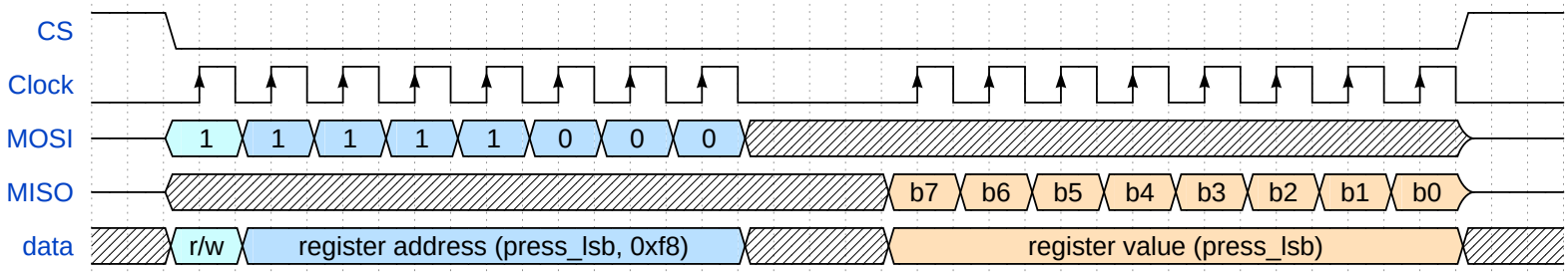


```rust
const REG_ADDR: u8 = 0xf8;

// enable the sensor
cs.set_low();

// buffer[2]: the address and "empty" value
let mut buf = [(1 << 7) | reg, 0x00];
spi.blocking_transfer_in_place(&mut buf);

// disable the sensor
cs.set_high();

// use the value
let pressure_lsb = buf[1];
```

```rust
const REG_ADDR: u8 = 0xf8;

// enable the sensor
cs.set_low();

// two buffers[2], writing and reading
let tx_buf = [(1 << 7) | REG_ADDR, 0x00];
let mut rx_buf = [0u8; 2];
spi.transfer(&mut rx_buf, &tx_buf).await;

// disable the sensor
cs.set_high();
```

Writing to a digital sensor

using synchronous/asynchronous SPI to set up the `ctrl_meas` register of the BMP280 sensor

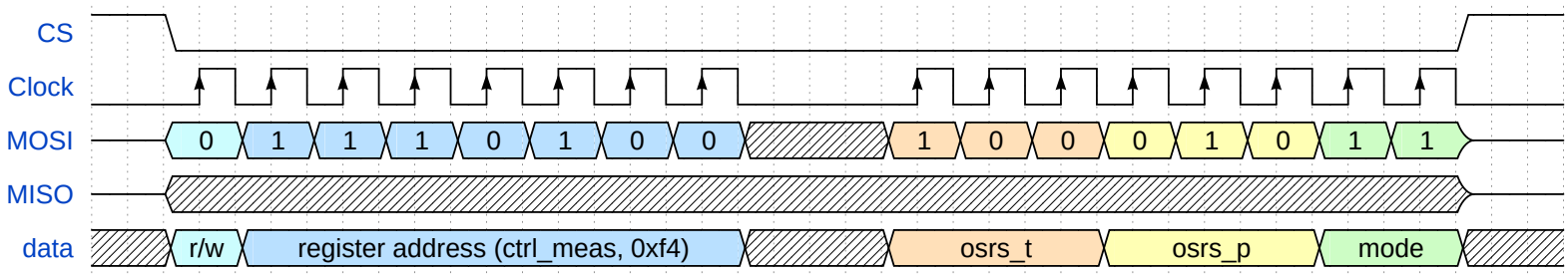


```rust
const REG_ADDR: u8 = 0xf4;

// see subchapters 3.3.2, 3.3.1 and 3.6
let value = 0b100_010_11;

// enable the sensor
cs.set_low();

// buffer[2]: the address and "empty" value
let mut buf = [!(1 << 7) & reg, value];
spi.blocking_transfer_in_place(&mut buf);

// disable the sensor
cs.set_high();
```

```rust
const REG_ADDR: u8 = 0xf4;

// see subchapters 3.3.2, 3.3.1 and 3.6
let value = 0b100_010_11;

// enable the sensor
cs.set_low();

// two buffers[2], writing and reading (ignored)
let tx_buf = [!(1 << 7) & REG_ADDR, value];
let mut rx_buf = [0u8; 2];
spi.transfer(&mut rx_buf, &tx_buf).await;
```

Conclusion

we talked about

- Direct Memory Access
- Buses
  - Universal Asynchronous Receiver and Transmitter
  - Serial Peripheral Interface
- Analog and Digital Sensors