Interrupts, PWM and ADC

Lecture 3

Copyright © Politehnica Bucharest and Wyliodrin SRL 2025, licensed under CC BY-SA 4.0.

Interrupts, PWM and ADC

- Interrupts
- Counters
- Timers and Alarms
- About Analog and Digital Signals
- Pulse Width Modulation (PWM)
- Analog to Digital Converters (ADC)

Exceptions

for the ARM Cortex-M33 processor

Bibliography

for this section

Joseph Yiu, *The Definitive Guide to ARM® Cortex®-M23 and Cortex-M33 Processors*

- Chapter 4 - *Architecture*
  - Section 4.5 - *Exceptions and Interrupts*
    - Subsection 4.4.1 - *What are exceptions*
- Chapter 8 - *Exceptions and Interrupts*
  - Section 8.1 - *What are Exceptions and Interrupts*
  - Section 8.2 - *Exception types+*

Processor Exceptions

what happens if something does not work as required

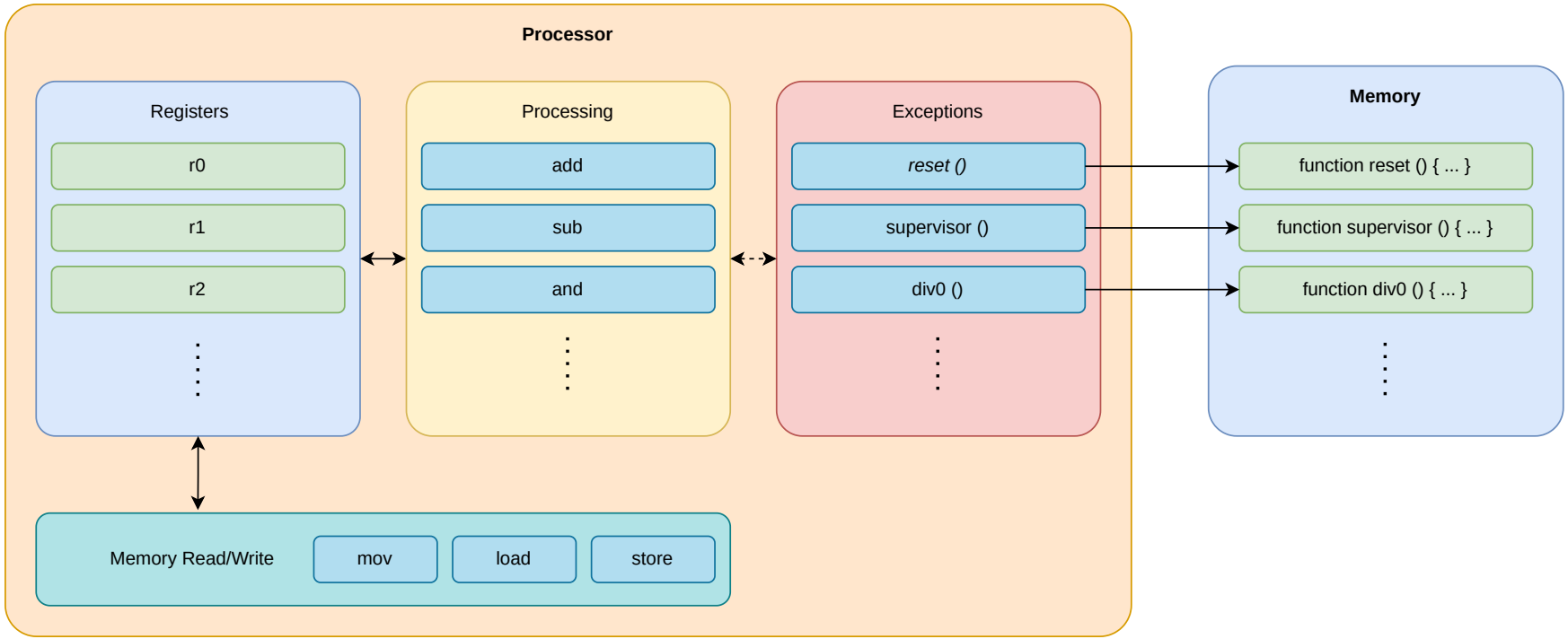

Standard ARM Cortex-M Exceptions

what happens if something does not work as required

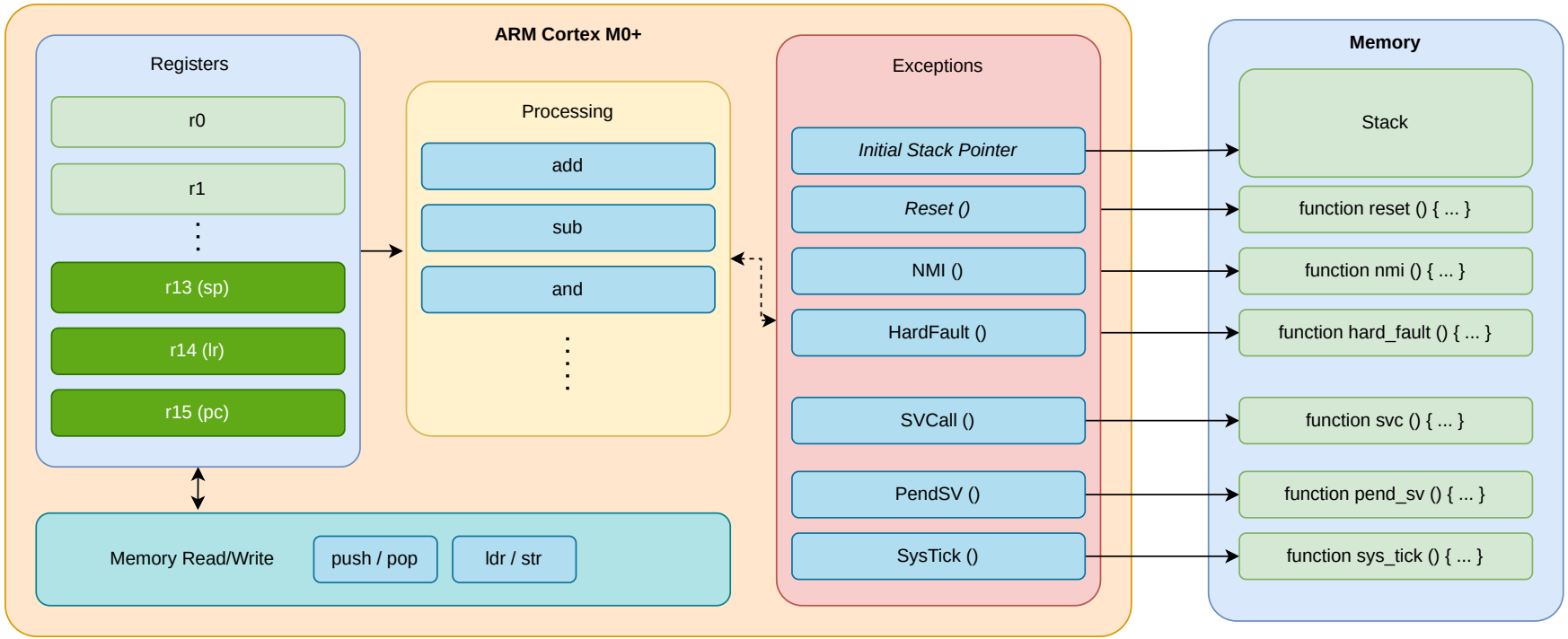

ARM Cortex-M Interrupts

some hardware device notifies the MCU

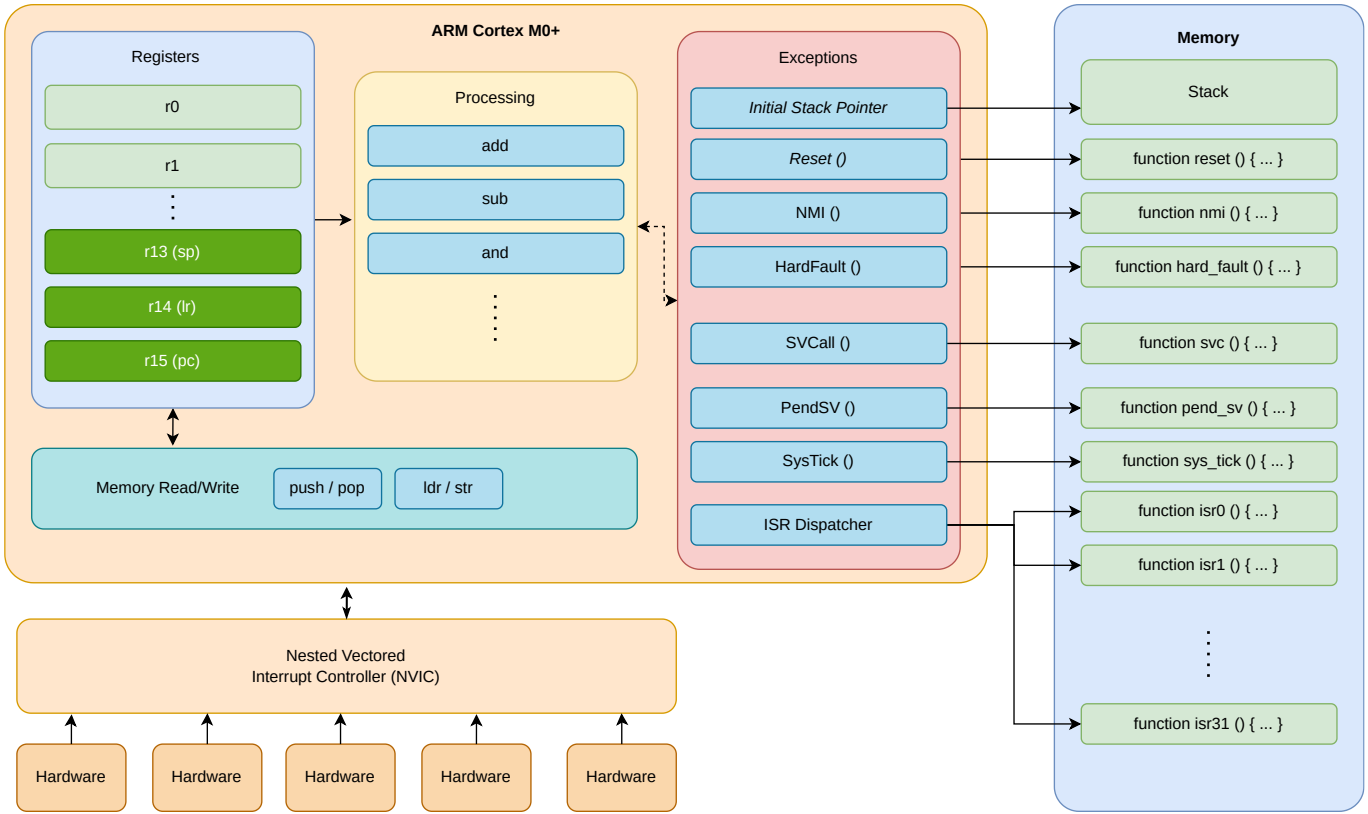

Exceptions and Interrupts in Embassy

- Embassy registers handlers for Exceptions
- Each of the Embassy drivers that you use provides interrupt handlers for the peripheral they control
- Developers have to **bind** interrupts to the driver.

IRQ	Interrupt Source	IRQ	Interrupt Source	IRQ	Interrupt Source	IRQ	Interrupt Source	IRQ	Interrupt Source
0	TIMER0_IRQ_0	11	DMA_IRQ_1	22	IO_IRQ_BANK0_NS	33	UART0_IRQ	44	POWMAN_IRQ_POW
1	TIMER0_IRQ_1	12	DMA_IRQ_2	23	IO_IRQ_QSPI	34	UART1_IRQ	45	POWMAN_IRQ_TIMER
2	TIMER0_IRQ_2	13	DMA_IRQ_3	24	IO_IRQ_QSPI_NS	35	ADC_IRQ_FIFO	46	SPAREIRQ_IRQ_0

List of some of the RP2350's interrupts

Register the Interrupt

```
bind_interrupts!(struct Irqs {
    ADC_IRQ_FIFO => InterruptHandler;
});
```

Bind it to the driver

```
let mut adc = Adc::new(p.ADC, Irqs, Config::default());
```

Timers

Bibliography

for this section

Raspberry Pi Ltd, *RP2350 Datasheet*

- Chapter 8 - *Clocks*
  - Chapter 8.1 - *Overview*
    - Subchapter 8.1.1
    - Subchapter 8.1.2
- Chapter 12 - *Peripherals*
  - Chapter 12.8 - *System Timers*

Clocks

all peripherals and the MCU use a clock to execute at certain intervals

Source	Usage
external crystal (XOSC)	a stable frequency is required, for instance when using USB
internal ring (ROSC)	low frequency, in between 1.8 - 12 MHz (varies)

Embassy initializes the Raspberry Pi Pico with the clock source from the 12 MHz crystal.

```
let p = embassy_rp::init(Default::default());
```

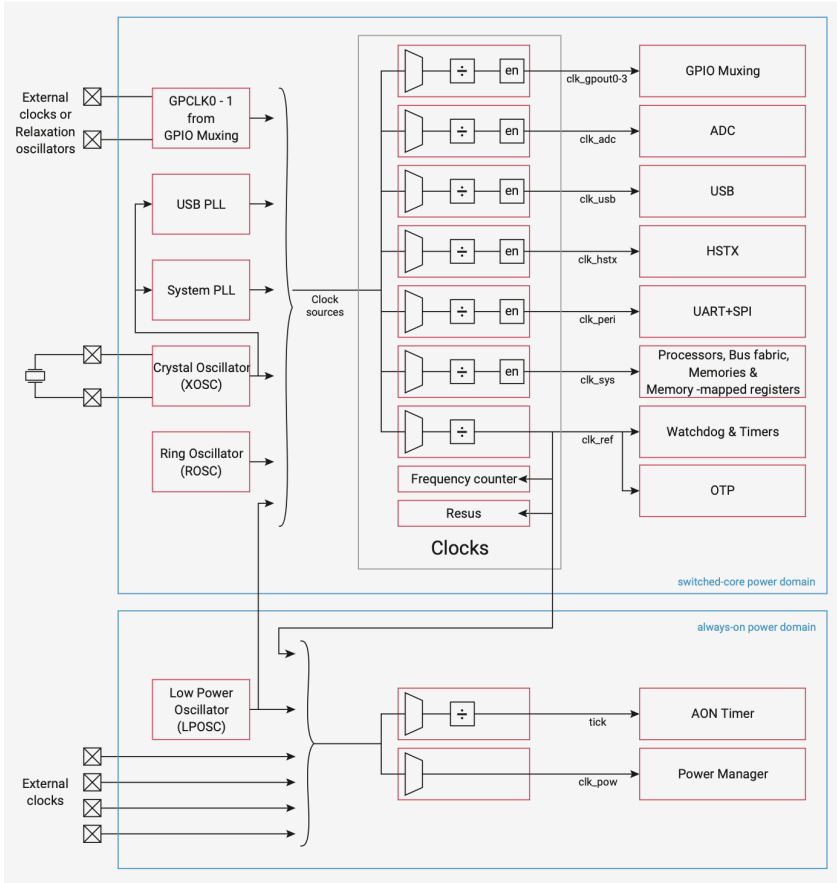

Frequency divider

stabilizing the signal and adjusting it

1. divides down the clock signals used for the timer, giving reduced overflow rates
2. allows the timer to be clocked at a user desired rate

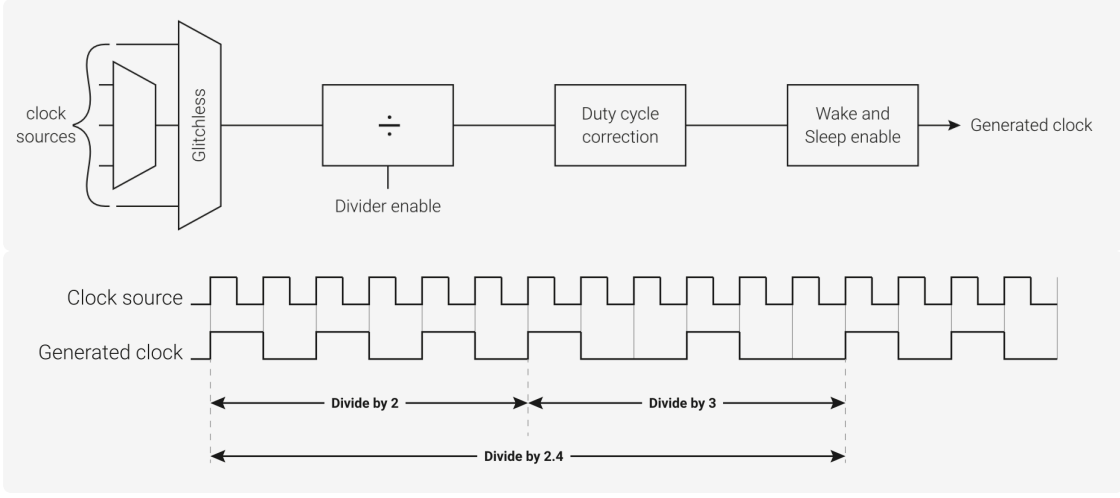

Counter

increments a register at every clock cycle

Registers	Description
`value`	the current value of the counter
`direction`	set to count UP or DOWN
`reset`	UP: the value at which the counter resets to `0` DOWN: the value to which the counter resets after getting to `0`

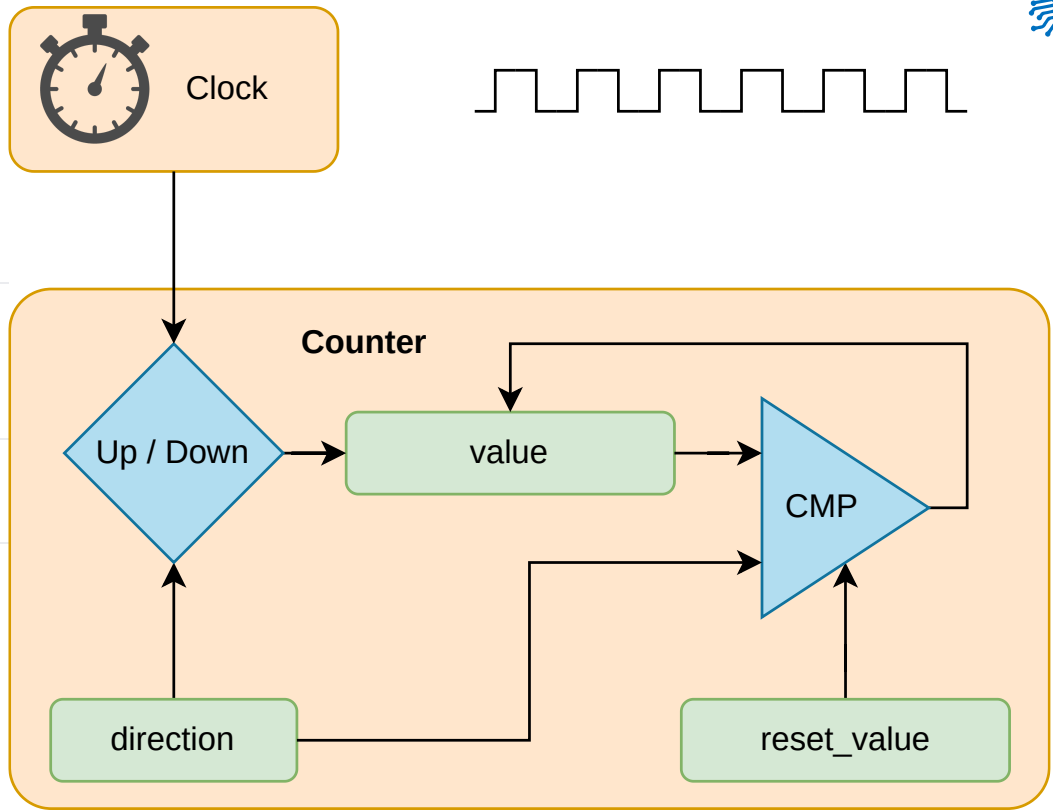

SysTick

ARM Cortex-M time counter

The ARM Cortex-M0+ registers start at a base address of `0xe0000000` (defined as PPB_BASE in SDK).

Offset	Name	Info
0xe010	SYST_CSR	SysTick Control and Status Register
0xe014	SYST_RVR	SysTick Reload Value Register
0xe018	SYST_CVR	SysTick Current Value Register
0xe01c	SYST_CALIB	SysTick Calibration Value Register

- decrements the value of `SYST_CVR` every µs
- when `SYST_CVR` becomes `0`:
  - triggers the `SysTick` exception
  - next clock cycle sets the value of `SYST_CVR` to `SYST_RVR`
- `SYST_CALIB` is the value of `SYST_RVR` for a 10ms interval (might not be available)

`SYST_CSR` register

Bits	Name	Description	Type	Reset
31:17	Reserved.	-	-	-
16	COUNTFLAG	Returns 1 if timer counted to 0 since last time this was read. Clears on read by application or debugger.	RO	0x0
15:3	Reserved.	-	-	-
2	CLKSOURCE	SysTick clock source. Always reads as one if SYST_CALIB reports NOREF. Selects the SysTick timer clock source: 0 = External reference clock. 1 = Processor clock.	RW	0x0
1	TICKINT	Enables SysTick exception request: 0 = Counting down to zero does not assert the SysTick exception request. 1 = Counting down to zero to asserts the SysTick exception request.	RW	0x0
0	ENABLE	Enable SysTick counter: 0 = Counter disabled. 1 = Counter enabled.	RW	0x0

$$f = \frac{1}{SYST_RVR} * 1,000,000[Hz]_{SI}$$

SysTick

ARM Cortex-M peripheral

The ARM Cortex-M0+ registers start at a base address of `0xe0000000` (defined as PPB_BASE in SDK).

Offset	Name	Info
0xe010	SYST_CSR	SysTick Control and Status Register
0xe014	SYST_RVR	SysTick Reload Value Register
0xe018	SYST_CVR	SysTick Current Value Register
0xe01c	SYST_CALIB	SysTick Calibration Value Register

```rust
const SYST_RVR: *mut u32 = 0xe000_e014 as *mut u32;
const SYST_CVR: *mut u32 = 0xe000_e018 as *mut u32;
const SYST_CSR: *mut u32 = 0xe000_e010 as *mut u32;

// fire systick every 5 seconds
let interval: u32 = 5_000_000;
unsafe {
    write_volatile(SYST_RVR, interval);
    write_volatile(SYST_CVR, 0);
    // set fields `ENABLE` and `TICKINT`
    write_volatile(SYST_CSR, 0b11);
}
```

`SYST_CSR` register

Bits	Name	Description	Type	Reset
31:17	Reserved.	-	-	-
16	COUNTFLAG	Returns 1 if timer counted to 0 since last time this was read. Clears on read by application or debugger.	RO	0x0
15:3	Reserved.	-	-	-
2	CLKSOURCE	SysTick clock source. Always reads as one if SYST_CALIB reports NOREF. Selects the SysTick timer clock source: 0 = External reference clock. 1 = Processor clock.	RW	0x0
1	TICKINT	Enables SysTick exception request: 0 = Counting down to zero does not assert the SysTick exception request. 1 = Counting down to zero to asserts the SysTick exception request.	RW	0x0
0	ENABLE	Enable SysTick counter: 0 = Counter disabled. 1 = Counter enabled.	RW	0x0

Register `SysTick` handler

```rust
#[exception]
unsafe fn SysTick() {
    /* systick fired */
}
```

Alarm

counter that triggers interrupts after a time interval

Registers	Description
`value`	the current value of the counter
`direction`	set to count UP or DOWN
`reset`	UP: max value before `0` DOWN: value after `0`
`alarm_x`	when `value` == `alarm_x`, triggers an interrupt, `x` in `1` ... `n`

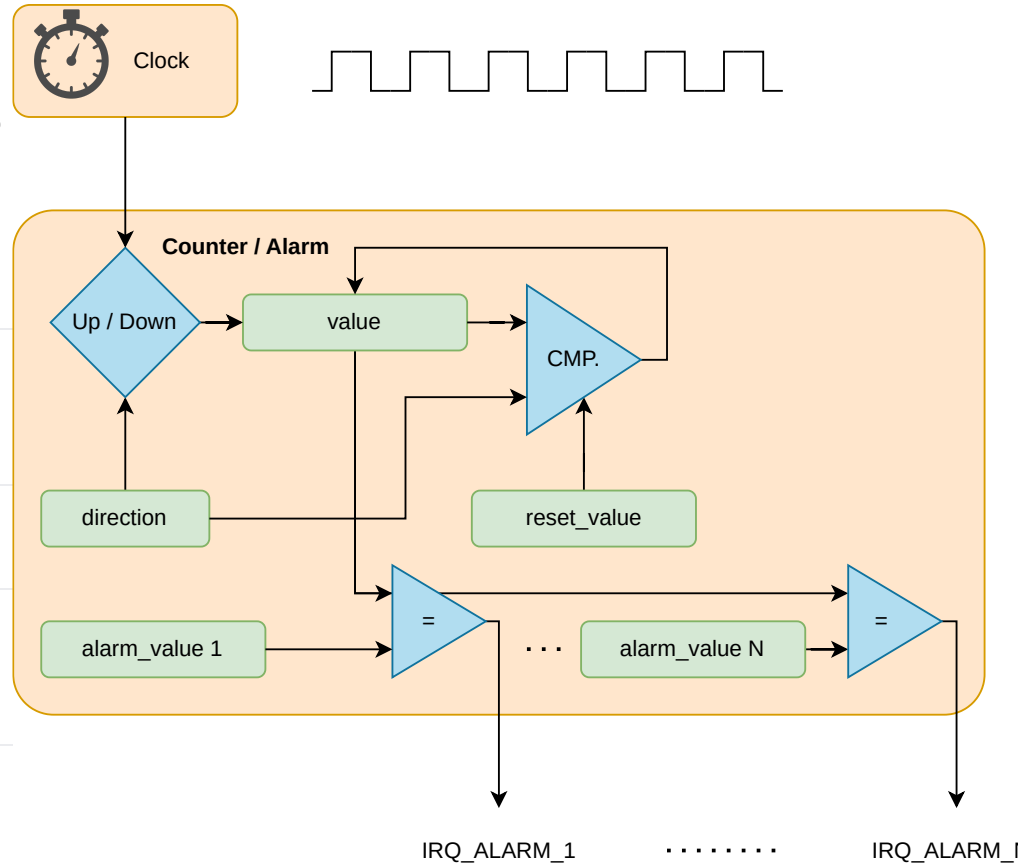

RP2350's Timers

two timers, `TIMER0` and `TIMER1`

- store a 64 bit number (`reset` is 2^{64-1})
- start with `0` at (the peripheral's) reset
- increment the number every µs
- in practice fully monotonic (cannot over flow)
- allow 4 alarms that trigger interrupts
  - `TIMER0_IRQ_0` and `TIMER1_IRQ_0`
  - `TIMER0_IRQ_1` and `TIMER1_IRQ_1`
  - `TIMER0_IRQ_2` and `TIMER1_IRQ_2`
  - `TIMER0_IRQ_3` and `TIMER1_IRQ_3`
- `alarm_0` … `alarm_3` registers are only 32 bits wide

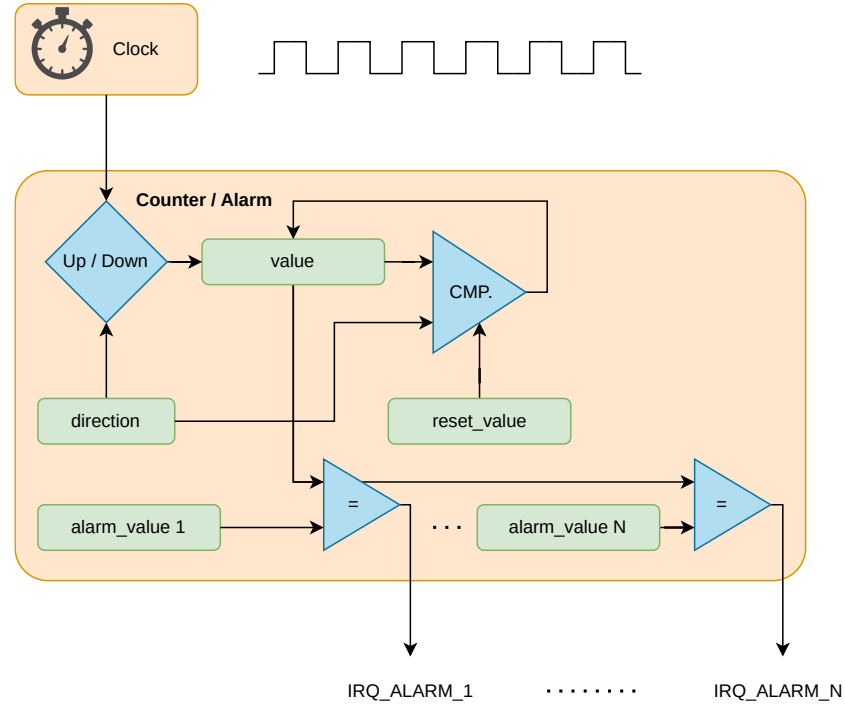

RP2350's Timer instance

read the number of elapsed µs since reset

Reading the time elapsed since restart

```
const TIMERLR: *const u32 = 0x400b_000c;
const TIMERHR: *const u32 = 0x400b_0008;

let time: u64 = unsafe {
    let low = read_volatile(TIMERLR);
    let high = read_volatile(TIMERHR);
    high as u64 << 32 | low
}
```

The **reading order maters** as reading `TIMELR` latches the value in `TIMEHR` (stops being updated) until `TIMEHR` is read. Works only in **single core**.

The `TIMER0` and `TIMER1` registers start at base addresses of `0x400b0000` and `0x400b8000` respectively (defined as TIMER0_BASE and TIMER1_BASE in SDK).

Offset	Name	Info
0x00	TIMEHW	Write to bits 63:32 of time always write timelw before timehw
0x04	TIMELW	Write to bits 31:0 of time writes do not get copied to time until timehw is written
0x08	TIMEHR	Read from bits 63:32 of time always read timelr before timehr
0x0c	TIMELR	Read from bits 31:0 of time
0x10	ALARM0	Arm alarm 0, and configure the time it will fire. Once armed, the alarm fires when TIMER_ALARM0 == TIMELR. The alarm will disarm itself once it fires, and can be disarmed early using the ARMED status register.
0x14	ALARM1	Arm alarm 1, and configure the time it will fire. Once armed, the alarm fires when TIMER_ALARM1 == TIMELR. The alarm will disarm itself once it fires, and can be disarmed early using the ARMED status register.
0x18	ALARM2	Arm alarm 2, and configure the time it will fire. Once armed, the alarm fires when TIMER_ALARM2 == TIMELR. The alarm will disarm itself once it fires, and can be disarmed early using the ARMED status register.
0x1c	ALARM3	Arm alarm 3, and configure the time it will fire. Once armed, the alarm fires when TIMER_ALARM3 == TIMELR. The alarm will disarm itself once it fires, and can be disarmed early using the ARMED status register.
0x20	ARMED	Indicates the armed/disarmed status of each alarm. A write to the corresponding ALARMx register arms the alarm. Alarms automatically disarm upon firing, but writing ones here will disarm immediately without waiting to fire.
0x24	TIMERAWH	Raw read from bits 63:32 of time (no side effects)
0x28	TIMERAWL	Raw read from bits 31:0 of time (no side effects)
0x2c	DBGPAUSE	Set bits high to enable pause when the corresponding debug ports are active
0x30	PAUSE	Set high to pause the timer
0x34	LOCKED	Set locked bit to disable write access to timer Once set, cannot be cleared (without a reset)

Alarm

triggering an interrupt at an interval

```rust
#[interrupt]
unsafe fn TIMER0_IRQ_0() { /* alarm fired */ }
```

```rust
const TIMERLR: *const u32 = 0x400b_000c;
const ALARM0: *mut u32 = 0x400b_0010;
// + 0x2000 is bitwise set
const INTE_SET: *mut u32 = 0x400b_0040;

// set an alarm after 3 seconds
let us = 3_0000_0000;

unsafe {
    let time = read_volatile(TIMERLR);
    // use `wrapping_add` as overflowing may panic
    write_volatile(ALARM0, time.wrapping_add(us));
    write_volatile(INTE_SET, 1 << 0);
};
```

- the alarm can be set only for the lower 32 bits
- maximum 72 minutes (use *RTC* for longer alarms)

The `TIMER0` and `TIMER1` registers start at base addresses of `0x400b0000` and `0x400b8000` respectively (defined as TIMER0_BASE and TIMER1_BASE in SDK).

Offset	Name	Info
0x00	TIMEHW	Write to bits 63:32 of time always write timelw before timehw
0x04	TIMELW	Write to bits 31:0 of time writes do not get copied to time until timehw is written
0x08	TIMEHR	Read from bits 63:32 of time always read timelr before timehr
0x0c	TIMELR	Read from bits 31:0 of time
0x10	ALARM0	Arm alarm 0, and configure the time it will fire. Once armed, the alarm fires when TIMER_ALARM0 == TIMELR. The alarm will disarm itself once it fires, and can be disarmed early using the ARMED status register.
0x14	ALARM1	Arm alarm 1, and configure the time it will fire. Once armed, the alarm fires when TIMER_ALARM1 == TIMELR. The alarm will disarm itself once it fires, and can be disarmed early using the ARMED status register.
0x18	ALARM2	Arm alarm 2, and configure the time it will fire. Once armed, the alarm fires when TIMER_ALARM2 == TIMELR. The alarm will disarm itself once it fires, and can be disarmed early using the ARMED status register.
0x1c	ALARM3	Arm alarm 3, and configure the time it will fire. Once armed, the alarm fires when TIMER_ALARM3 == TIMELR. The alarm will disarm itself once it fires, and can be disarmed early using the ARMED status register.
Offset	**Name**	**Info**
0x38	SOURCE	Selects the source for the timer. Defaults to the normal tick configured in the ticks block (typically configured to 1 microsecond). Writing to 1 will ignore the tick and count clk_sys cycles instead.
0x3c	INTR	Raw Interrupts
0x40	INTE	Interrupt Enable
0x44	INTF	Interrupt Force
0x48	INTS	Interrupt status after masking & forcing

Signals

Digital Signals - Recap

Signals

Analog vs Digital

- *analog signals* are *real* signals
- *digital signals* are *a numerical representation* of an analog signal (software level)
- hardware usually works with two-level digital signals (hardware level)

Exceptions

- in wireless and in high-speed cable communication things get more complicated

> for PCB level / between integrated circuits on the same board / inside the same chip - things are a "a little simpler" - as detailed in the following

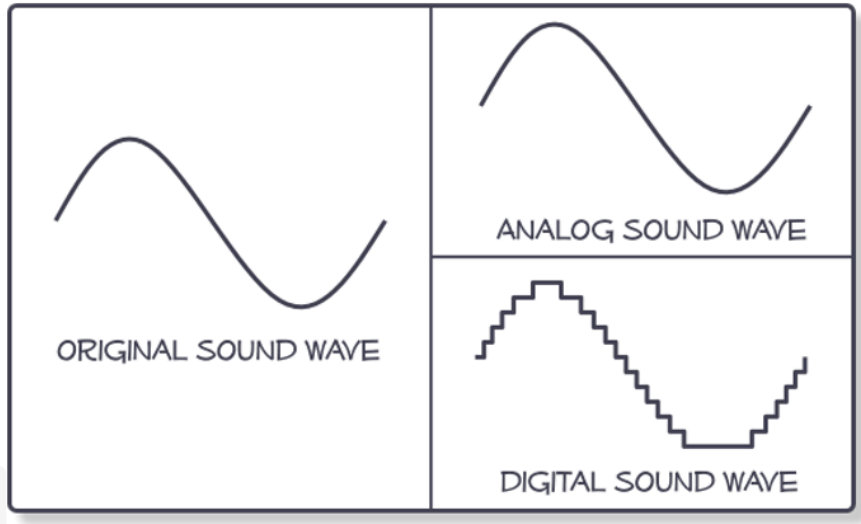

Why use digital in computing?

Signal that we *want* to generate with an output pin

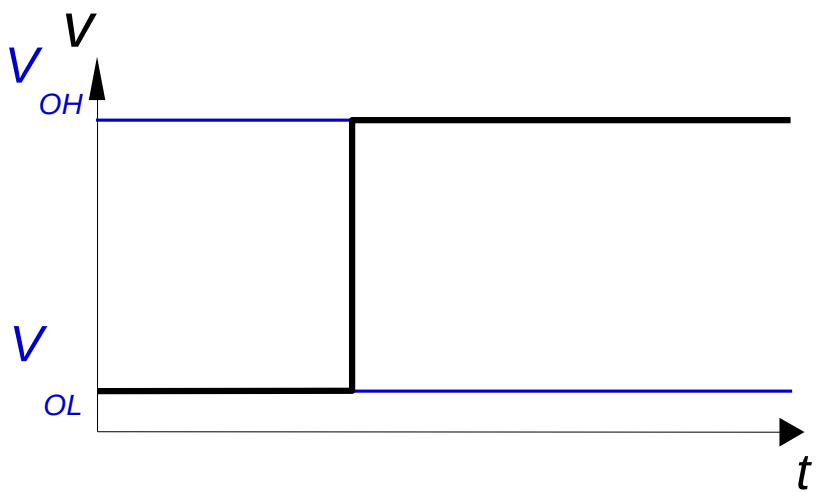

Signal that what we actually generate

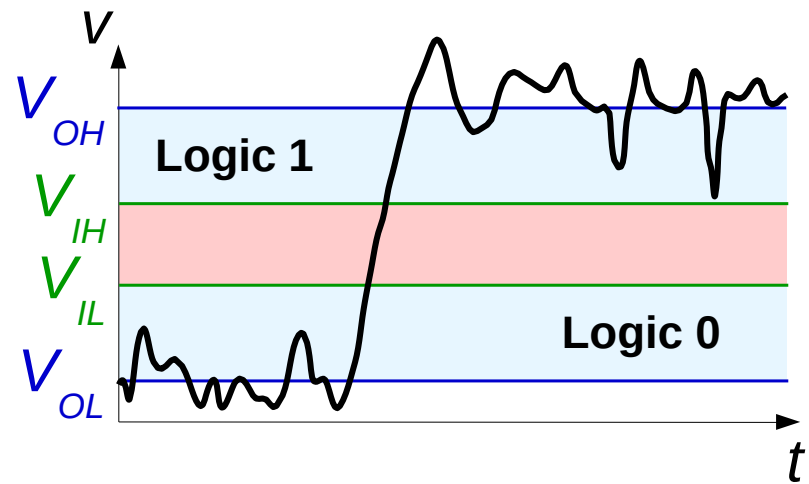

Why we still use it? Because after passing through an IC or a gate inside an IC - the signal is "rebuilt" and if the "digital discipline" described in the following is respected - we can preserve the information after numerous "passes". Thus, each element can behave with a large margin for error, yet the final result is correct.

Noise Margin

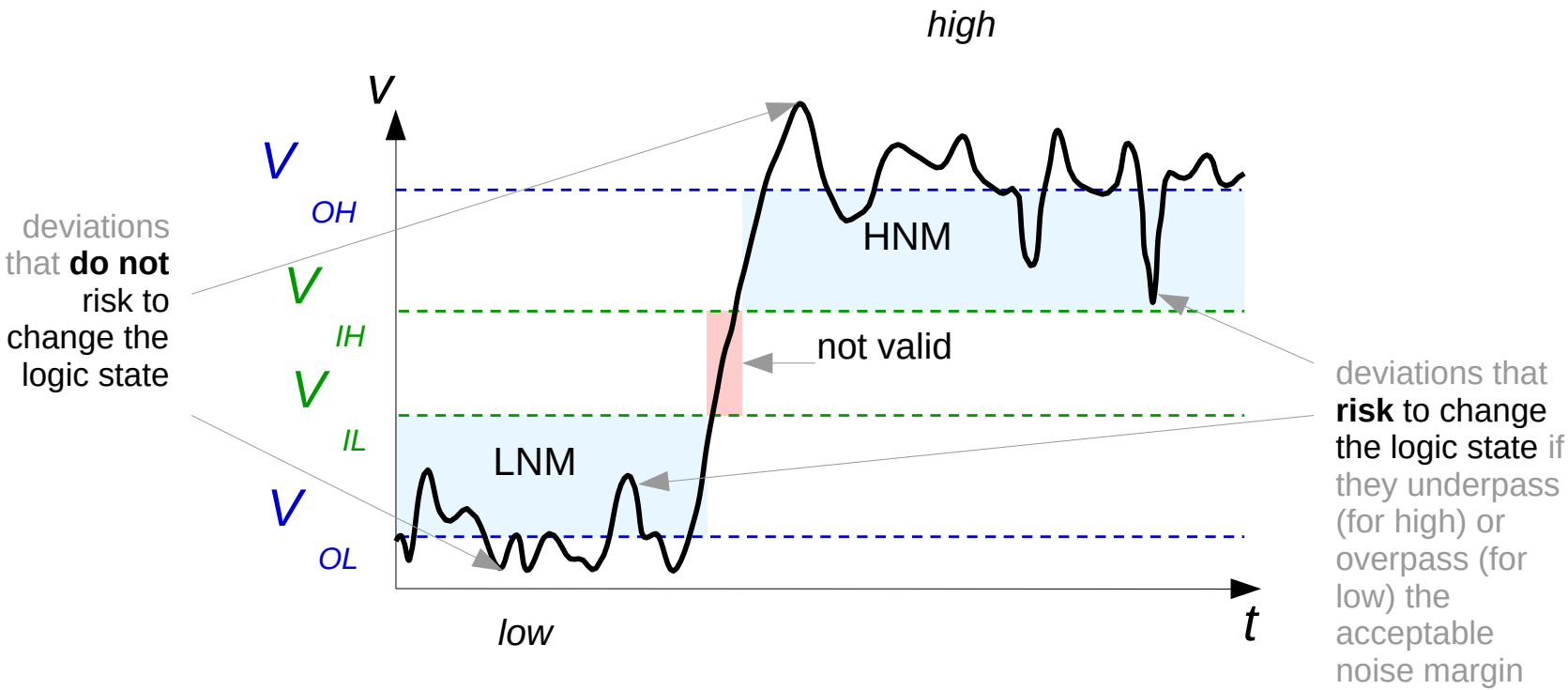

PWM

Pulse Width Modulation

Bibliography

for this section

1. **Raspberry Pi Ltd**, *RP2350 Datasheet*
   - Chapter 12 - *Peripherals*
     - Section 12.5 - *PWM*
2. **Paul Denisowski**, *Understanding PWM*

PWM

simulates an *analog* signal (using integration)

- generates a square signal
- if integrated (averaged), it looks like an analog signal

frequency	Hz	The number of repeats per s
duty_cycle	%	The percentage of the time when the signal is `High`

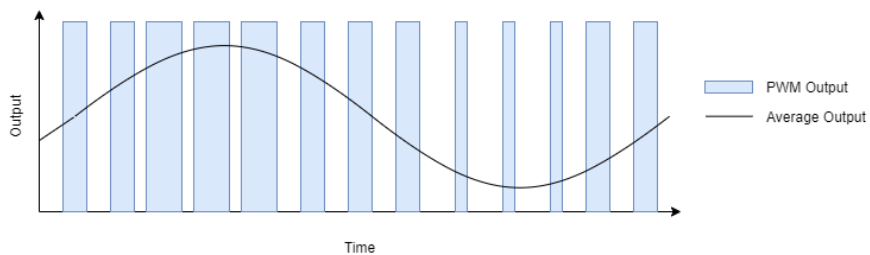

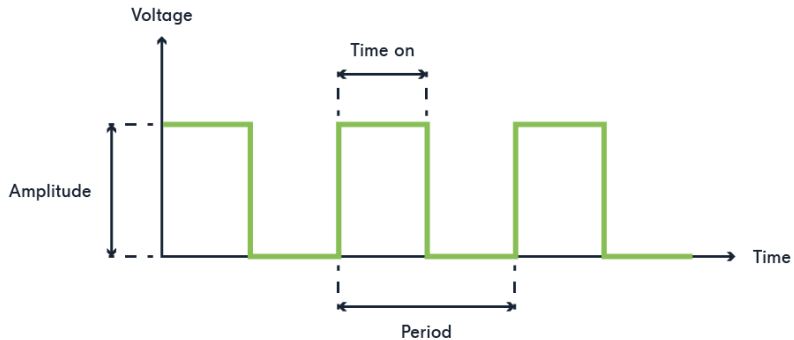

$$f = \frac{1}{period}\left[\frac{1}{s} = 1Hz\right]_{SI}$$

$$duty_cycle = \frac{time_on}{period}\%$$

PWM

generic device

$$f = \begin{cases} \frac{f_{clock}}{divider \times (top+1)} & correction = 0 \\ \frac{f_{clock}}{divider \times 2 \times (top+1)} & correction = 1 \end{cases}$$

$$pin_{a,b} = \begin{cases} 0 & compare_{a,b} >= value \\ 1 & compare_{a,b} < value \end{cases}$$

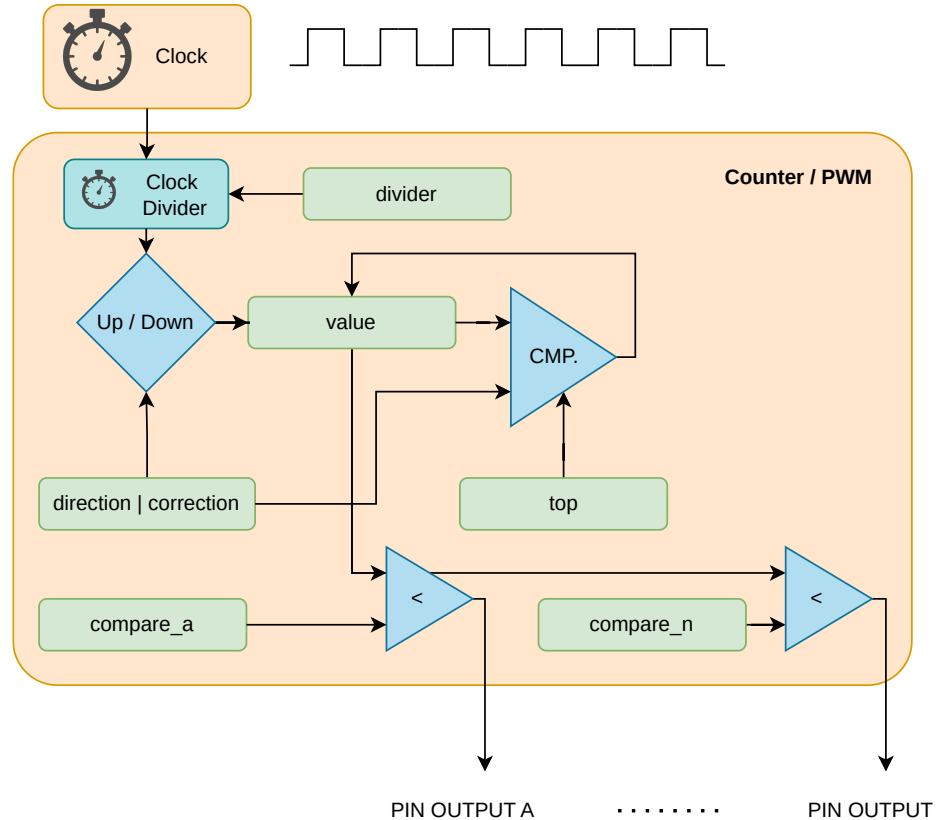

Usage examples

- dimming an LED

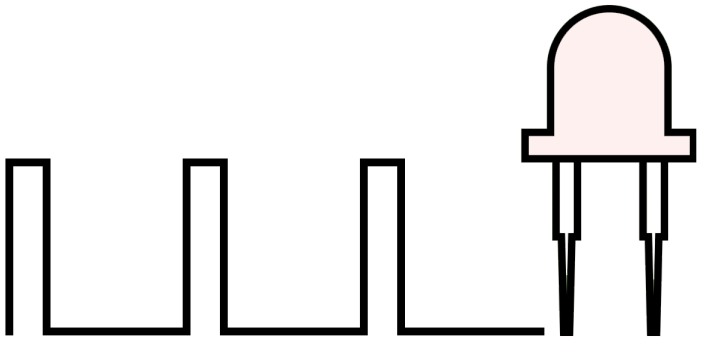

- controlling motors
  - controlling the angle of a stepper motor
  - controlling the RPM of a motor

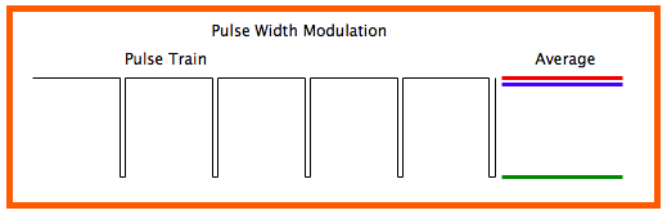

RP2350's PWM

- generates square signals
- counts the pulse width of input signals
- 8 or 12[1] PWM slices, each A and B channels
- each PWM channel is linked to a fixed pin
- some channels are connected to two pins
- may be used as timers (`IRQ1_INTE`)

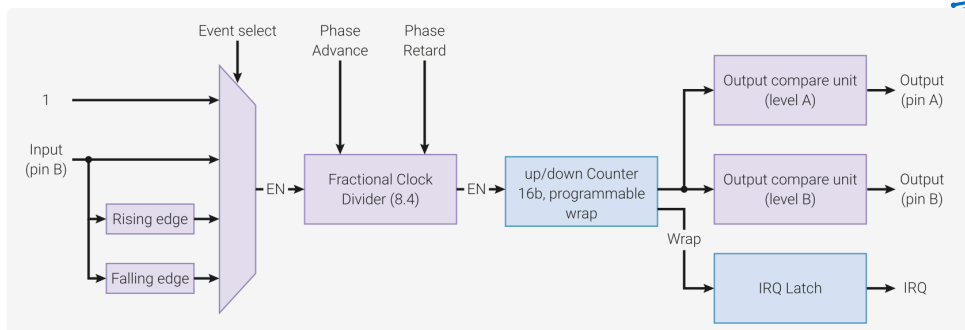

GPIO	0	1	2	3	4	5	6	7	8	9	10	11	12	13	14	15
PWM Channel	0A	0B	1A	1B	2A	2B	3A	3B	4A	4B	5A	5B	6A	6B	7A	7B
GPIO	16	17	18	19	20	21	22	23	24	25	26	27	28	29	30	31
PWM Channel	0A	0B	1A	1B	2A	2B	3A	3B	4A	4B	5A	5B	6A	6B	7A	7B
GPIO	32	33	34	35	36	37	38	39	40	41	42	43	44	45	46	47
PWM Channel	8A	8B	9A	9B	10A	10B	11A	11B	8A	8B	9A	9B	10A	10B	11A	11B

Registers

The PWM registers start at a base address of `0x400a8000` (defined as PWM_BASE in the SDK).

Offset	Name	Info
0x000	CH0_CSR	Control and status register
0x004	CH0_DIV	INT and FRAC form a fixed-point fractional number. Counting rate is system clock frequency divided by this number. Fractional division uses simple 1st-order sigma-delta.
0x008	CH0_CTR	Direct access to the PWM counter
0x00c	CH0_CC	Counter compare values
0x010	CH0_TOP	Counter wrap value

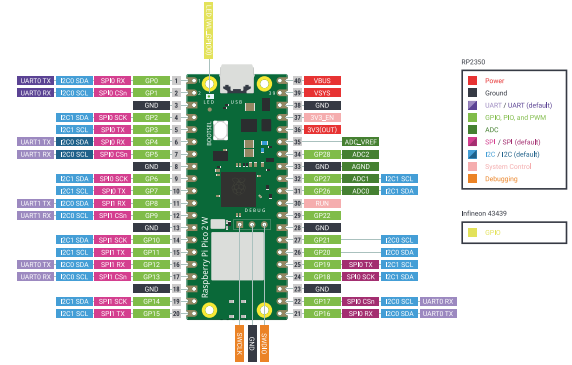

1. Depends on the RP2350 package ↩

RP2350's PWM Modes

standard mode

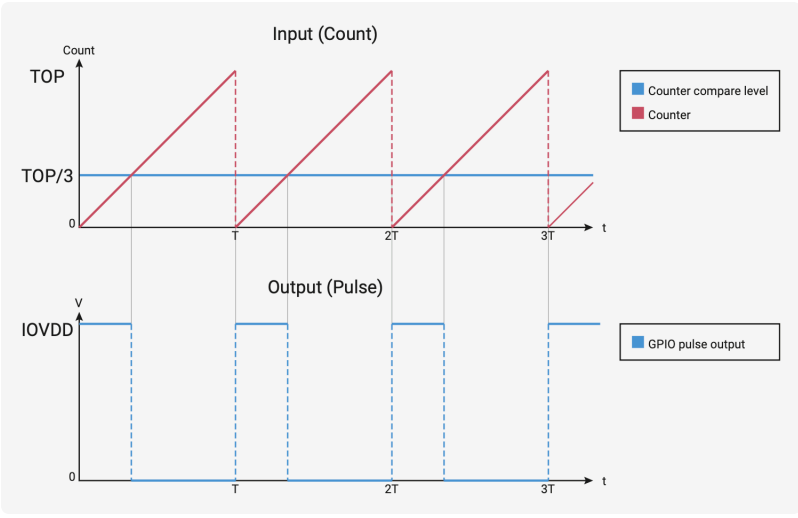

phase-correct mode

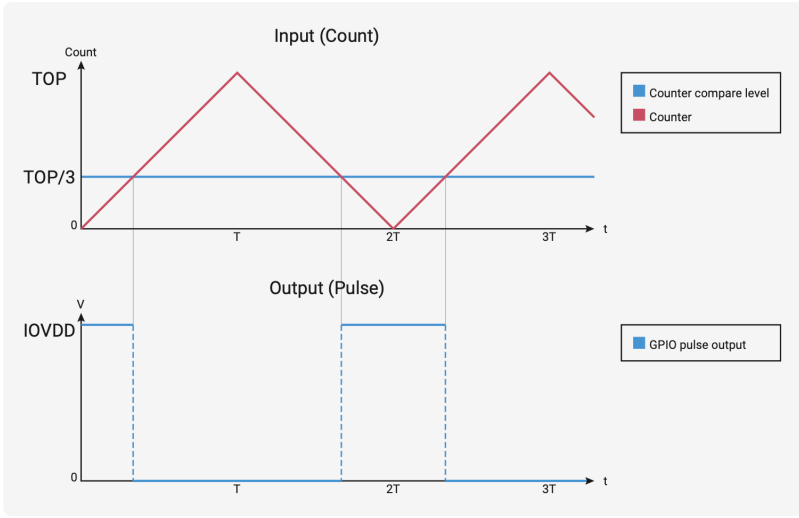

$$period = (TOP + 1) \times (PH_CORRECT + 1) \times \left(DIV_INT + \frac{DIV_FRAC}{16} \right) [s]_{SI}$$

$$f = \frac{f_{sys}}{period} [Hz]_{SI}$$

Example

using Embassy

```rust
use embassy_rp::pwm::{Config, Pwm};

let p = embassy_rp::init(Default::default());

let mut c: Config = Default::default();
c.top = 0x8000;
c.compare_b = 8;

let mut pwm = Pwm::new_output_b(
    p.PWM_CH4,
    p.PIN_25,
    c.clone()
);

loop {
    info!("LED duty cycle: {}/32768", c.compare_b);
    Timer::after_secs(1).await;
    c.compare_b += 10;
    pwm.set_config(&c);
}
```

```rust
pub struct Config {
    /// Inverts the PWM output signal on channel A.
    pub invert_a: bool,
    /// Inverts the PWM output signal on channel B.
    pub invert_b: bool,
    /// Enables phase-correct mode for PWM operation.
    pub phase_correct: bool,
    /// Enables the PWM slice, allowing it to generate an out
    pub enable: bool,
    /// A fractional clock divider, represented as a fixed-po
    /// 8 integer bits and 4 fractional bits. It allows preci
    /// the PWM output frequency by gating the PWM counter in
    /// A higher value will result in a slower output frequen
    pub divider: fixed::FixedU16<fixed::types::extra::U4>,
    /// The output on channel A goes high when `compare_a` is
    /// counter. A compare of 0 will produce an always low ou
    pub compare_a: u16,
    /// The output on channel B goes high when `compare_b` is
    /// counter.
    pub compare_b: u16,
    /// The point at which the counter wraps, representing th
    /// period. The counter will either wrap to 0 or reverse
    /// setting of `phase_correct`.
    pub top: u16,
}
```

ADC

Analog to Digital Converter

Bibliography

for this section

Raspberry Pi Ltd, *RP2040 Datasheet*

- Chapter 12 - *Peripherals*
  - Section 12.4 - *ADC and Temperature Sensor*
    - Subchapter 12.4.2
    - Subchapter 12.4.3
    - Subchapter 12.4.6

ADC

sampling an analog signal to an array of values

sampling rate	Hz	the frequency at which a new sample is read
resolution	bits	the number of bits used to store a sampled value

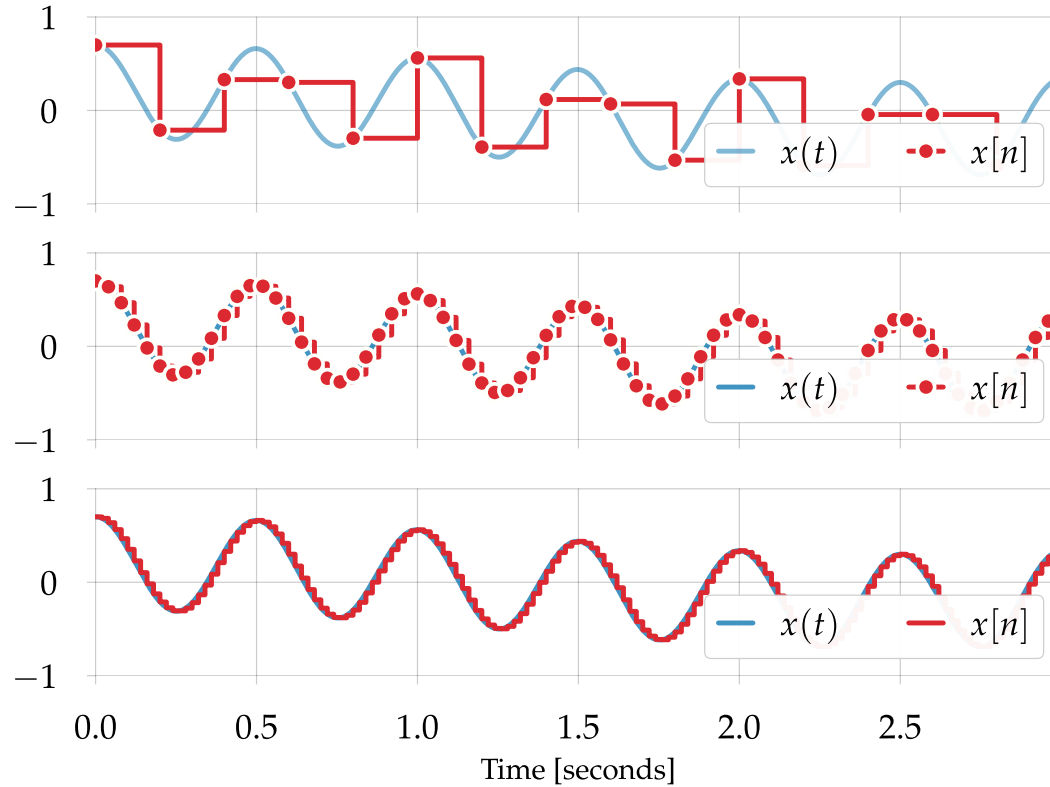

Lower sample rates yield the *aliasing effect*.

Nyquist–Shannon Sampling Theorem

$$sampling_f > 2 \times max_f$$

*The **sampling frequency** has to be at least **two times higher** than the **maximum frequency** of the signal* to avoid frequency aliasing[1].

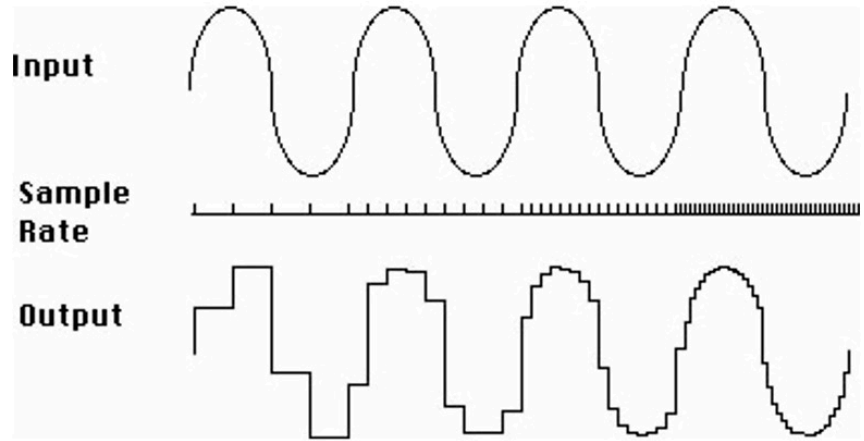

1. Aliasing is the overlapping of frequency components. This overlap results in distortion or artifacts when the signal is reconstructed from samples which causes the **reconstructed signal to differ from the original** continuous signal. ↩

Sampling

how the ADC works

- assumes bit_{n-1} of `compare_value` is `1`
- compares the input signal with a generated analog signal from `compare_value`
  - if input is lower, bit_{n-1} is `0`
  - if input if higher, bit_{n-1} is `1`
- repeats for bit_{n-2}, bit_{n-3} … bit_0

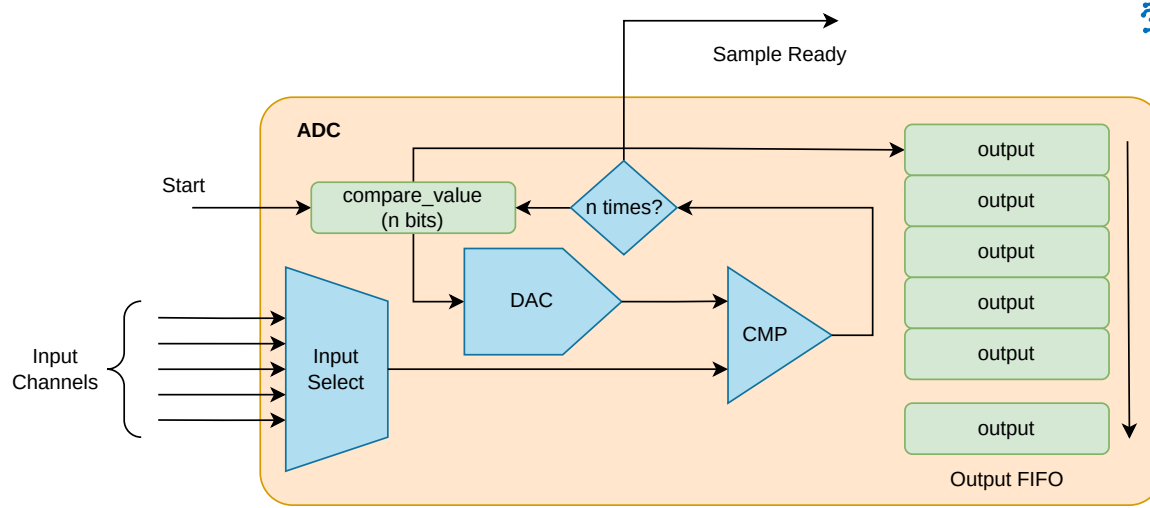

There are different types of ADCs depending on the architecture. The most common used is SAR (*Successive Approximation Register*) ADC, also integrated in RP2350.

RP2350's ADC

channels	4 or 8[1]
sampling rate	500 kHz
resolution	12 bits
V_{max}	3.3 V

- requires a 48 MHz clock signal
- channel 4 or 8[1:1] is connected to the internal temperature sensor

$$t = 27 - \frac{(V_{input_4} - 0.706)}{0.001721} [^{\circ}C]_{SI}$$

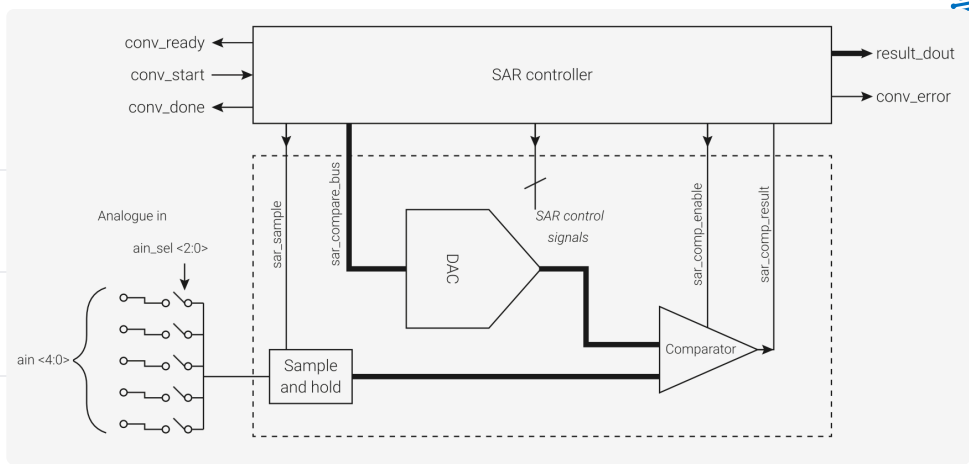

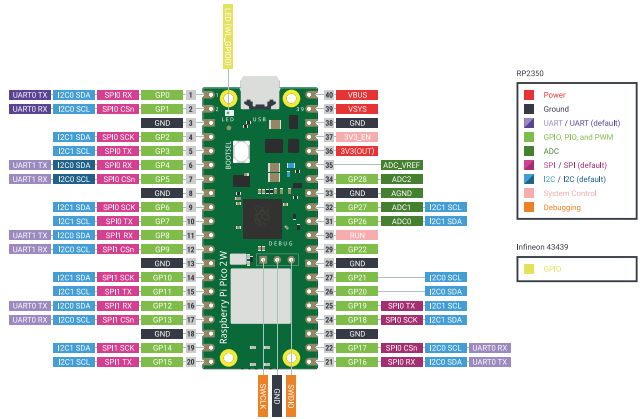

ADC

in Embassy

```rust
use embassy_rp::adc::{Adc, Channel, Config, InterruptHandler};

bind_interrupts!(struct Irqs {
    ADC_IRQ_FIFO => InterruptHandler;
});

let p = embassy_rp::init(Default::default());
let mut adc = Adc::new(p.ADC, Irqs, Config::default());

let mut p26 = Channel::new_pin(p.PIN_26, Pull::None);

loop {
    let level = adc.read(&mut p26).await.unwrap();
    info!("Pin 26 ADC: {}", level);
    let voltage = 3300 * level / 4095;
    info!("Pin 26 voltage: {}.{}V", voltage / 1000, voltage % 1000);
    Timer::after_secs(1).await;
}
```

Conclusion

we talked about

- Exceptions and Interrupts
- Counters
- SysTick
- Timers and Alarms
- PWM
- Analog and Digital
- ADC