CAGE NO.	DWG NO.	SH	REV

REVISIONS

ZONE	REV	DESCRIPTION	DATE	APPROVED

nand2_1x Schematic

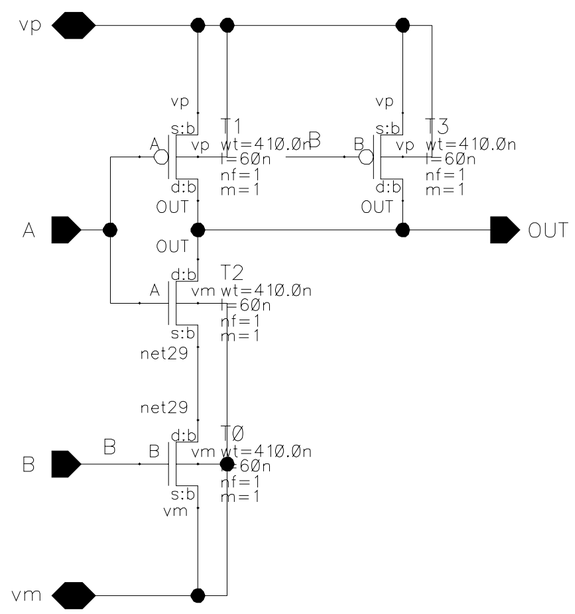

UPDATED Dec 17 08:02:14 2018	nand2_1x		
DRAWN			
CHECKED			
CHECKED	SIZE A	CAGE NO.	DWG NO.	REV
ISSUED	SCALE		SHEET OF