ZONE	REV	DESCRIPTION	DATE	APPROVED

Shf_line Schematic

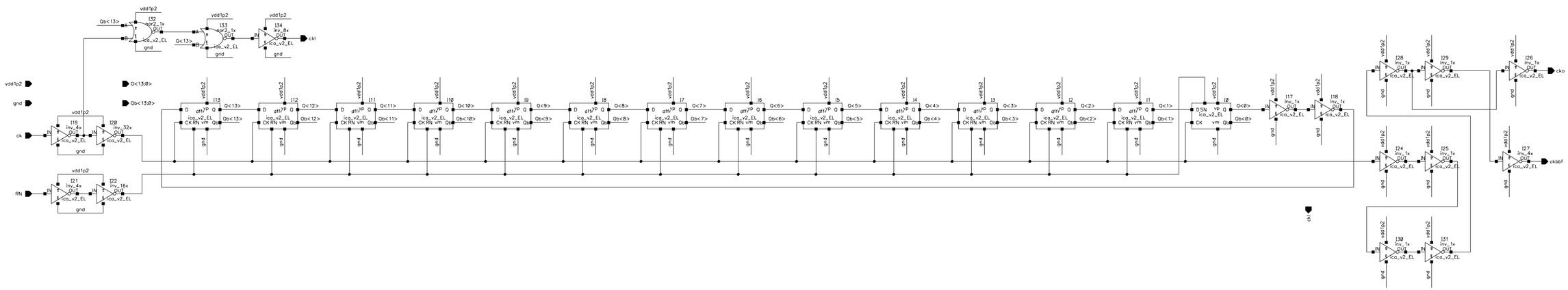

UPDATED Dec 17 08:09:01 2018	Shf_line
DRAWN	
CHECKED	
CHECKED	
CHECKED	SIZE D · CAGE NO. · DWG NO. · REV
ISSUED	SCALE · SHEET OF