CAGE NO.	DWG NO.	SH	REV

REVISIONS

ZONE	REV	DESCRIPTION	DATE	APPROVED

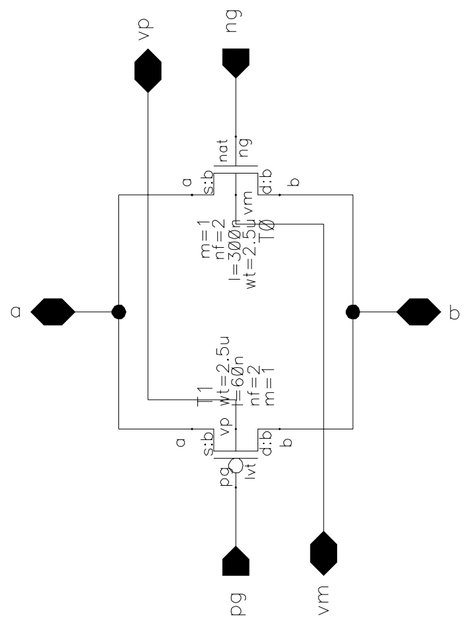

UPDATED	tgate1R_2p5u			
Dec 17 08:27:03 2018				
DRAWN				
CHECKED				
CHECKED	SIZE A	CAGE NO.	DWG NO.	REV
ISSUED	SCALE		SHEET OF	