CAGE NO.	DWG NO.	SH	REV

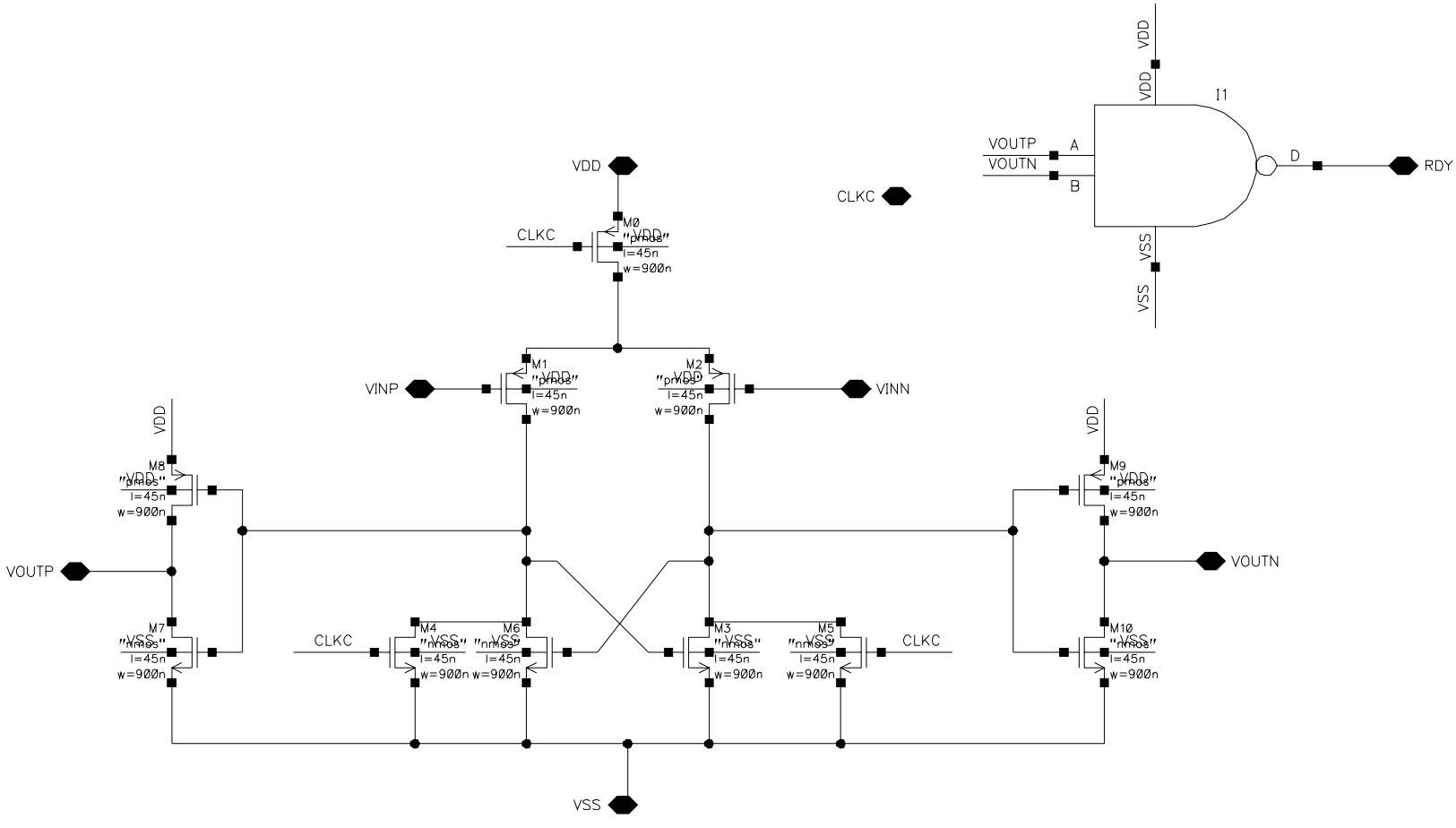

May 4 15:08:17 2019			
DRAWN qiaochuz	SIZE A	CAGE NO. POSH_TI_SAR_zqc_20190501	DWG NO. comparator_p	REV
ISSUED USC MC Group	SCALE		SHEET OF