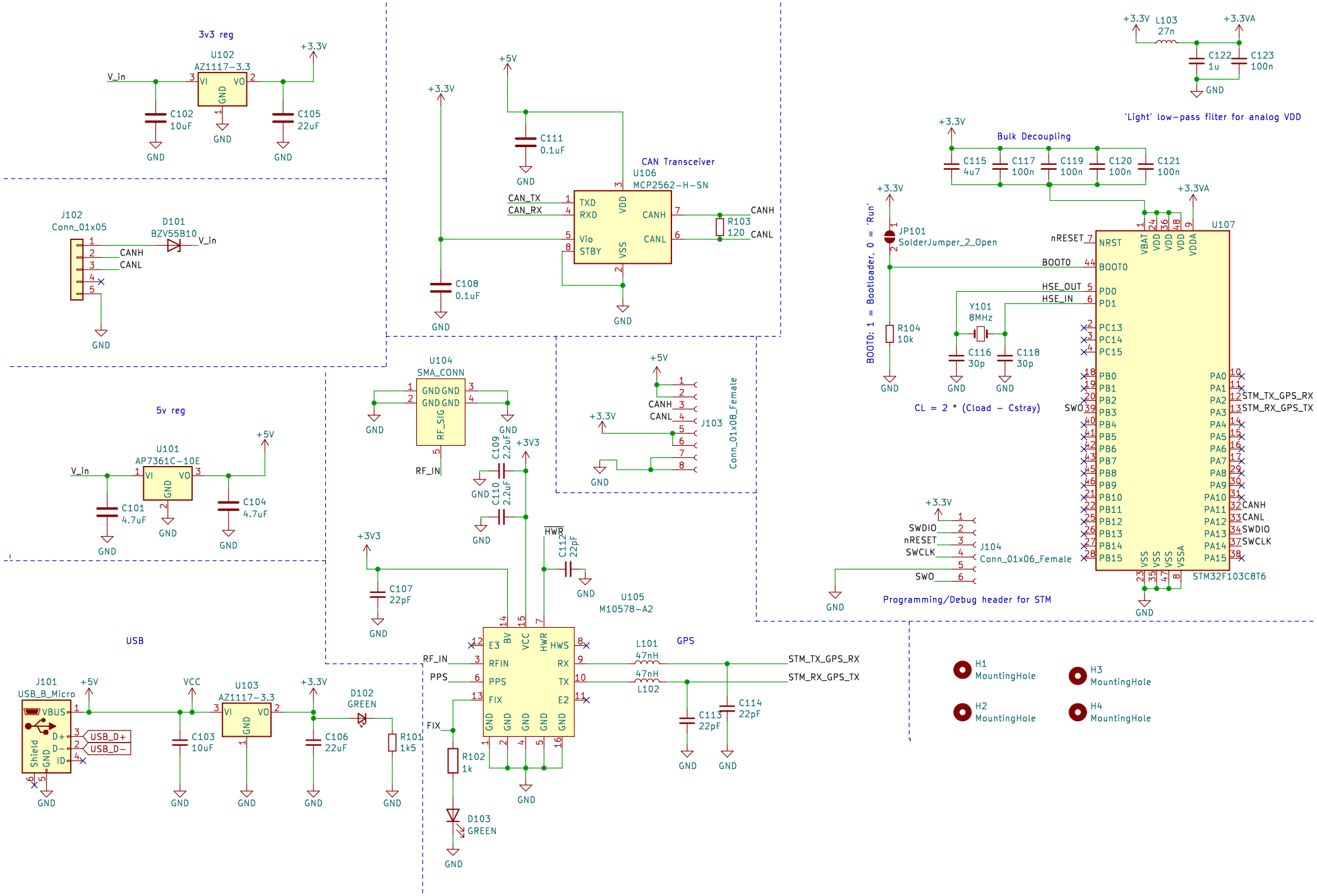
3v3 reg
U102
AZ1117-3.3
V_in
+3.3V
C102
10uF
C105
22uF
GND
J102
Conn_01x05
D101
BZV55B10
CANH
CANL
5v reg
U101
AP7361C-10E
+5V
C101
4.7uF
C104
4.7uF
USB
J101
USB_B_Micro
VBUS
USB_D+
USB_D-
Shield
VCC
U103
AZ1117-3.3
C103
10uF
C106
22uF
D102
GREEN
R101
1k5
CAN Transceiver
U106
MCP2562-H-SN
C111
0.1uF
C108
0.1uF
CAN_TX
CAN_RX
TXD
RXD
VDD
CANH
CANL
Vio
STBY
VSS
R103
120
U104
SMA_CONN
RF_SIG
RF_IN
C109
2.2uF
C110
2.2uF
+3V3
C107
22pF
HWR
C112
22pF
U105
M10578-A2
E3
BV
VCC
HWS
RFIN
RX
PPS
TX
FIX
E2
GND
R102
1k
D103
GREEN
J103
Conn_01x08_Female
GPS
L101
47nH
L102
47nH
STM_TX_GPS_RX
STM_RX_GPS_TX
C113
22pF
C114
22pF
L103
27n
C122
1u
C123
100n
'Light' low-pass filter for analog VDD
Bulk Decoupling
C115
4u7
C117
100n
C119
100n
C120
100n
C121
100n
JP101
SolderJumper_2_Open
BOOT0: 1 = Bootloader, 0 = 'Run'
R104
10k
Y101
8MHz
C116
30p
C118
30p
CL = 2 * (Cload - Cstray)
U107
nRESET
NRST
BOOT0
HSE_OUT
HSE_IN
PD0
PD1
PC13
PC14
PC15
PB0
PB1
PB2
SWO
PB3
PB4
PB5
PB6
PB7
PB8
PB9
PB10
PB11
PB12
PB13
PB14
PB15
PA0
PA1
PA2
PA3
PA4
PA5
PA6
PA7
PA8
PA9
PA10
PA11
PA12
PA13
PA14
PA15
VBAT
VDDA
VSSA
STM32F103C8T6
J104
Conn_01x06_Female
SWDIO
SWCLK
Programming/Debug header for STM
H1
MountingHole
H2
MountingHole
H3
MountingHole
H4
MountingHole