REVISION HISTORY			
REV	DESCRIPTION	DATE	APPROVED

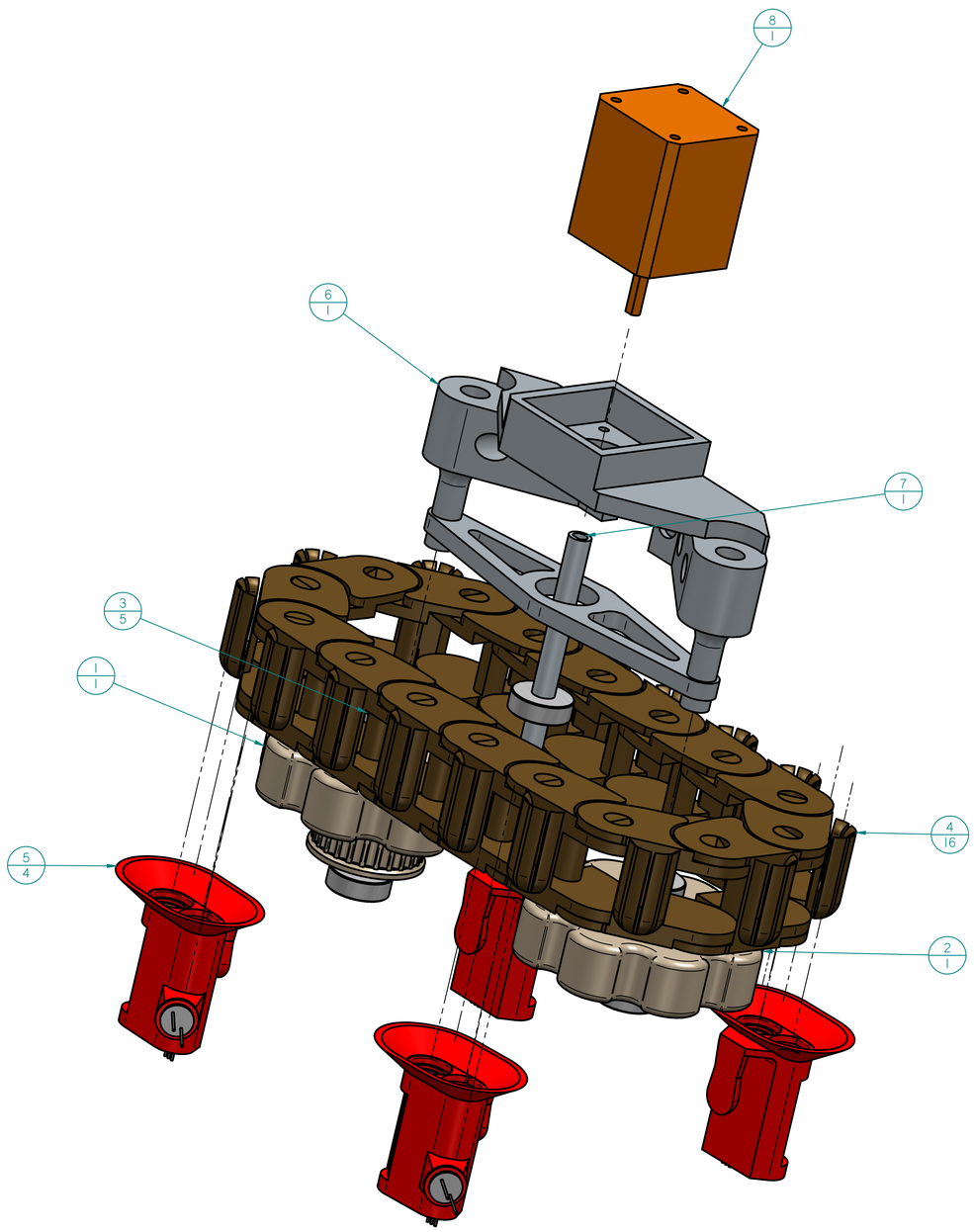

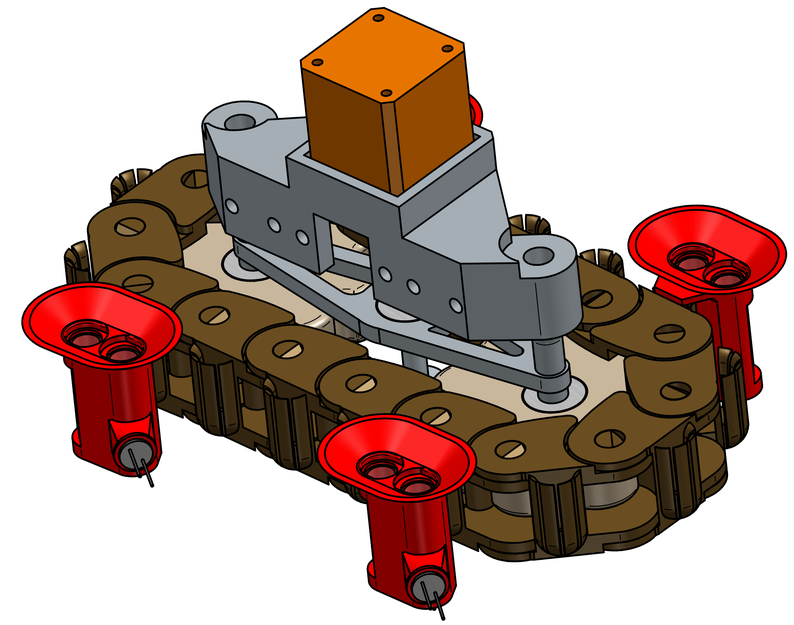

Item Number	File Name (no extension)	Author	Quantity
1	Chain Pulley -belt pulley attachment	F00009755	1
2	Chain Pulley -general end design	F00009755	1
3	Skateboard Bearing	F00009755	5
4	Mock Chain link for fitments	F00009755	16
5	Sample Bucket assembly	F00009755	4
6	chain assembly mount brackets	F00009755	1
7	chain assembly driveshaft	F00009755	1
8	Nema 17 2.1A	F00009755	1
9*	chain assembly drive belt	F00009755	1

	NAME	DATE
DRAWN	F00009755	04/15/26
CHECKED		
ENG APPR		
MGR APPR		

UNLESS OTHERWISE SPECIFIED
DIMENSIONS ARE IN INCHES
ANGLES ±XX°
2 PL ±XXX 3 PL ±XXXX

Solid Edge

TITLE
Sample Bucket Chain Assembly

SIZE D | DWG NO USU URC 2026 | REV A

FILE NAME: Sample Bucket Chain Assembly Drawing.dft

SCALE: | WEIGHT: | SHEET 1 OF 4

REVISION HISTORY			
REV	DESCRIPTION	DATE	APPROVED

	NAME	DATE
DRAWN	F0000975	04/15/26
CHECKED		
ENG APPR		
MGR APPR		

UNLESS OTHERWISE SPECIFIED
DIMENSIONS ARE IN INCHES
ANGLES ±XX°
2 PL ±XXX 3 PL ±XXXX

Solid Edge

TITLE
Sample Bucket Chain Assembly

SIZE	DWG NO	REV
D	USU URC 2026	A

FILE NAME: Sample Bucket Chain Assembly Drawing.dft

SCALE:	WEIGHT:	SHEET 2 OF 4

REVISION HISTORY			
REV	DESCRIPTION	DATE	APPROVED

	NAME	DATE
DRAWN	F0000975	04/15/26
CHECKED		
ENG APPR		
MGR APPR		

UNLESS OTHERWISE SPECIFIED
DIMENSIONS ARE IN INCHES
ANGLES ±XX°
2 PL ±XXX 3 PL ±XXXX

Solid Edge

TITLE
Sample Bucket Chain Assembly

SIZE	DWG NO	REV
D	USU URC 2026	A

FILE NAME: Sample Bucket Chain Assembly Drawing.dft

SCALE:	WEIGHT:	SHEET 3 OF 4

REVISION HISTORY			
REV	DESCRIPTION	DATE	APPROVED

	NAME	DATE
DRAWN	F0000975	04/15/26
CHECKED		
ENG APPR		
MGR APPR		

UNLESS OTHERWISE SPECIFIED
DIMENSIONS ARE IN INCHES
ANGLES ±XX°
2 PL ±XXX 3 PL ±XXXX

Solid Edge

TITLE
Sample Bucket Chain Assembly

SIZE D | DWG NO USU URC 2026 | REV A

FILE NAME: Sample Bucket Chain Assembly Drawing.dft

SCALE: | WEIGHT: | SHEET 4 OF 4