REVISION HISTORY			
REV	DESCRIPTION	DATE	APPROVED

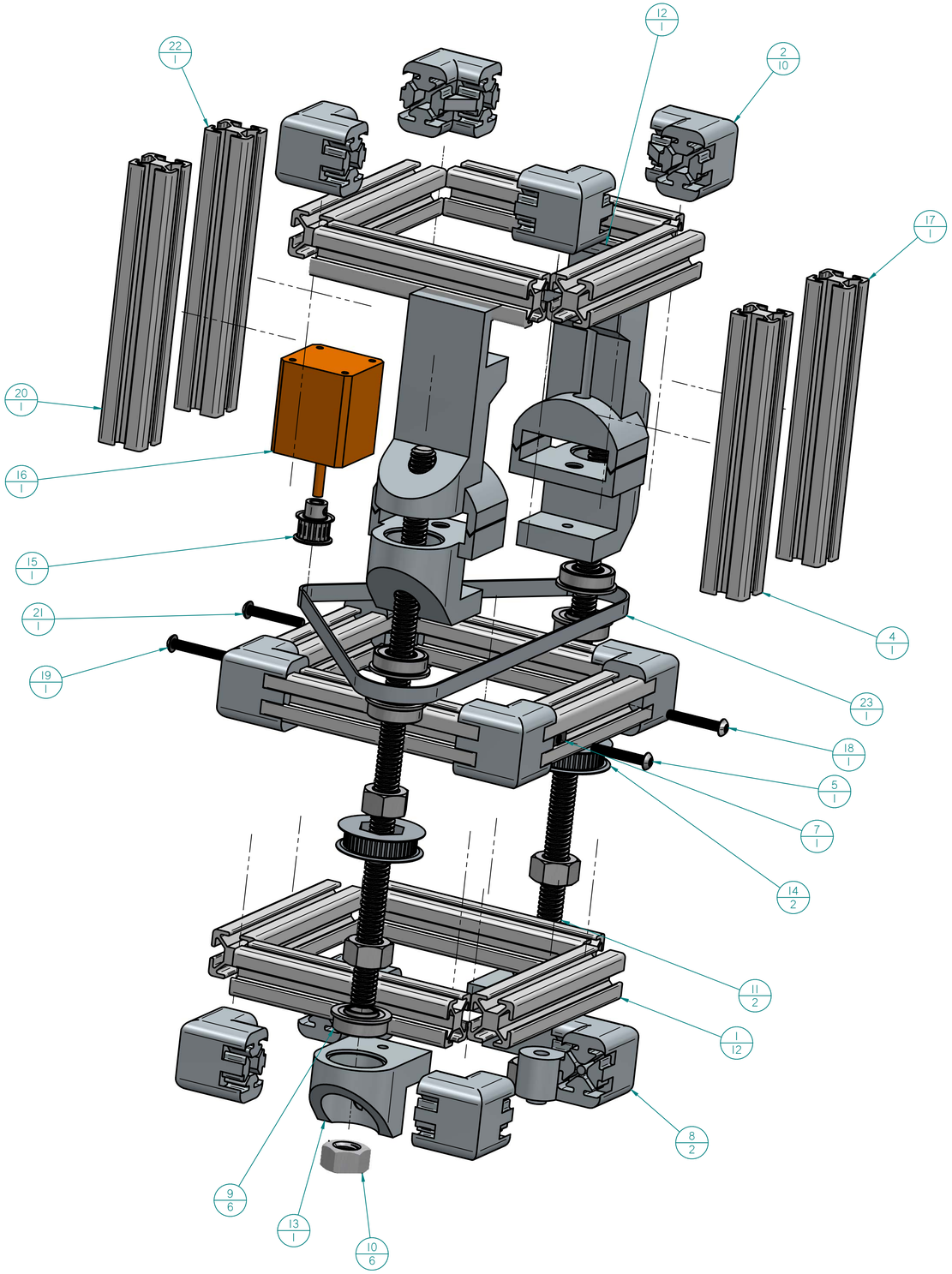

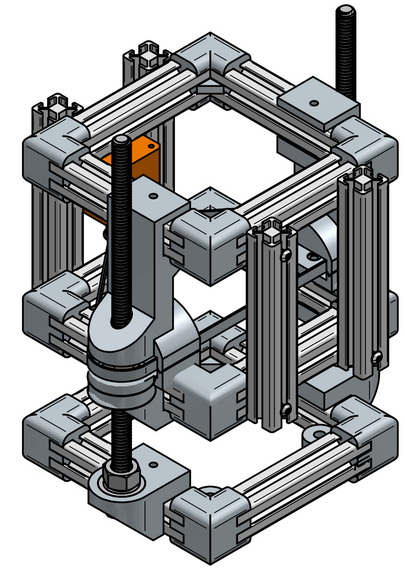

Item Number	File Name (no extension)	Author	Quantity
1	Al Ext. 5in	F00009755	12
2	AL ext Corner butt connection	F00009755	10
3*	5508N12_T-Slotted Framing Fasteners	F00009755	1
4	Al Ext. 6in	F00009755	1
5	sockethead_10-32-1.25_92196A272_18-8 Stainless Steel Socket Head Screw	F00009755	1
6*	sockethead_10-32-1.25_92196A272_18-8 Stainless Steel Socket Head Screw_mir3	F00009886	1
7	5508N12_T-Slotted Framing Fasteners_mir4	F00009755	1
8	Pulley attachment_AL ext Corner butt connection	F00009755	2
9	0.5INCH_ID_FLANGE_6384K361_Ball Bearing	F00009755	6
10	94815A107_Carbon Steel Acme Hex Nut	F00009755	6
11	12IN_98935A718_Carbon Steel Acme Lead Screw	F00009755	2
12	Lead Screw Bearing Retaining beam	F00009755	1
13	Bottom Lead Screw Bearing Retaining bracket	F00009755	1
14	over nut Lead Screw Belt Pulley 9mm	F00009755	2
15	SMALL PULLEY6497K261_High-Strength HTD Timing Belt Pulley	F00009755	1
16	Nema 17 2.1A	F00009755	1
17	Al Ext. 6in_mir	F00009886	1
18	sockethead_10-32-1.25_92196A272_18-8 Stainless Steel Socket Head Screw_mir	F00009886	1
19	sockethead_10-32-1.25_92196A272_18-8 Stainless Steel Socket Head Screw_mir1	F00009886	1

Item Number	File Name (no extension)	Author	Quantity
20	Al Ext. 6in_mir1	F00009886	1
21	sockethead_10-32-1.25_92196A272_18-8 Stainless Steel Socket Head Screw_mir2	F00009886	1
22	Al Ext. 6in_mir2	F00009886	1
23	630mm timing belt Mcmaster carr	F00009755	1

	NAME	DATE
DRAWN	F00009755	04/15/26
CHECKED		
ENG APPR		
MGR APPR		

UNLESS OTHERWISE SPECIFIED
DIMENSIONS ARE IN INCHES
ANGLES ±X.X°
2 PL ±X.XX 3 PL ±X.XXX

Solid Edge

TITLE
Science Module Chassis Assembly

SIZE	DWG NO	REV
D	USU URC 2026	A

FILE NAME: Science Module Chassis Assembly Drawing.dft

SCALE:	WEIGHT:	SHEET 1 OF 4

REVISION HISTORY			
REV	DESCRIPTION	DATE	APPROVED

	NAME	DATE
DRAWN	F0000975	04/15/26
CHECKED		
ENG APPR		
MGR APPR		

UNLESS OTHERWISE SPECIFIED
DIMENSIONS ARE IN INCHES
ANGLES ±XX°
2 PL ±XXX 3 PL ±XXXX

Solid Edge

TITLE
Science Module Chassis Assembly

SIZE	DWG NO	REV
D	USU URC 2026	A

FILE NAME: Science Module Chassis Assembly Drawing.dft

SCALE:	WEIGHT:	SHEET 2 OF 4

REVISION HISTORY			
REV	DESCRIPTION	DATE	APPROVED

	NAME	DATE
DRAWN	F0000975	04/15/26
CHECKED		
ENG APPR		
MGR APPR		

UNLESS OTHERWISE SPECIFIED
DIMENSIONS ARE IN INCHES
ANGLES ±XX°
2 PL ±XXX 3 PL ±XXXX

Solid Edge

TITLE
Science Module Chassis Assembly

SIZE	DWG NO	REV
D	USU URC 2026	A

FILE NAME: Science Module Chassis Assembly Drawing.dft

SCALE:	WEIGHT:	SHEET 3 OF 4

REVISION HISTORY			
REV	DESCRIPTION	DATE	APPROVED

	NAME	DATE
DRAWN	F0000975	04/15/26
CHECKED		
ENG APPR		
MGR APPR		

UNLESS OTHERWISE SPECIFIED
DIMENSIONS ARE IN INCHES
ANGLES ±XX°
2 PL ±XXX 3 PL ±XXXX

Solid Edge

TITLE
Science Module Chassis Assembly

SIZE	DWG NO	REV
D	USU URC 2026	A

FILE NAME: Science Module Chassis Assembly Drawing.dft

SCALE:	WEIGHT:	SHEET 4 OF 4