REVISION HISTORY			
REV	DESCRIPTION	DATE	APPROVED

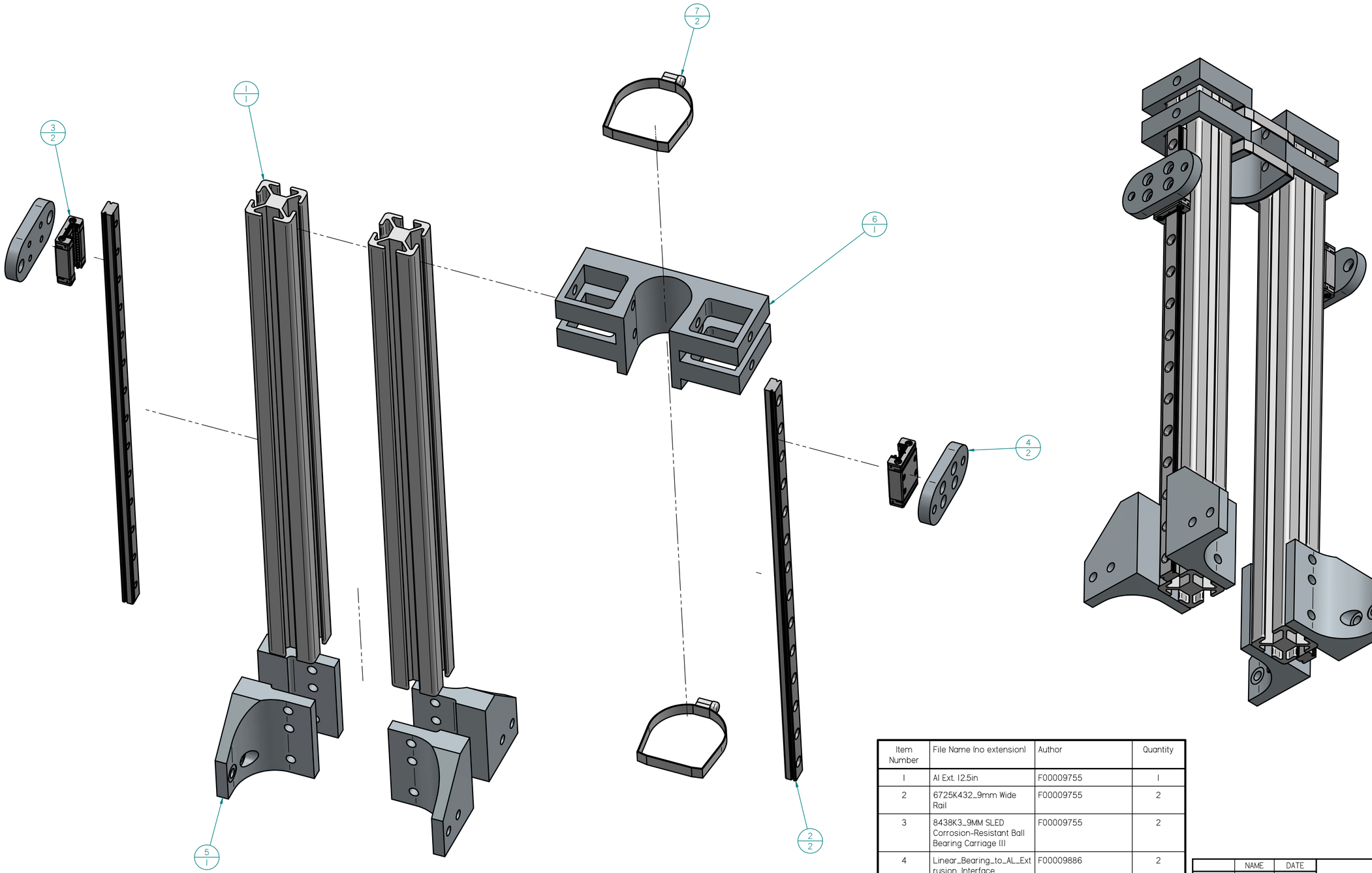

Item Number	File Name (no extension)	Author	Quantity
1	Al Ext. 12.5in	F00009755	1
2	6725K432_9mm Wide Rail	F00009755	2
3	8438K3_9MM SLED Corrosion-Resistant Ball Bearing Carriage (1)	F00009755	2
4	Linear_Bearing_to_AL_Extrusion_Interface	F00009886	2
5	90 degree elbow for vertical tslots	F00009755	1
6	Linear actuator mount for hose clamps	F00009755	1
7	hose clamp for linear actuator	F00009755	2

	NAME	DATE
DRAWN	F00009755	04/15/26
CHECKED		
ENG APPR		
MGR APPR		

UNLESS OTHERWISE SPECIFIED
DIMENSIONS ARE IN INCHES
ANGLES ±XX°
2 PL ±XXX 3 PL ±XXXX

Solid Edge

TITLE
Vertical Linear Actuator Mount Assembly

SIZE D | DWG NO USU URC 2026 | REV A

FILE NAME: Vertical Linear Mount Assembly Drawing.dft

SCALE: | WEIGHT: | SHEET 1 OF 4

REVISION HISTORY			
REV	DESCRIPTION	DATE	APPROVED

	NAME	DATE
DRAWN	F0000975	04/15/26
CHECKED		
ENG APPR		
MGR APPR		

UNLESS OTHERWISE SPECIFIED
DIMENSIONS ARE IN INCHES
ANGLES ±XX°
2 PL ±XXX 3 PL ±XXXX

Solid Edge

TITLE
Vertical Linear Actuator Mount Assembly

SIZE D | DWG NO USU URC 2026 | REV A

FILE NAME: Vertical Linear Mount Assembly Drawing.dft

SCALE: | WEIGHT: | SHEET 2 OF 4

REVISION HISTORY			
REV	DESCRIPTION	DATE	APPROVED

	NAME	DATE
DRAWN	F0000975	04/15/26
CHECKED		
ENG APPR		
MGR APPR		

UNLESS OTHERWISE SPECIFIED
DIMENSIONS ARE IN INCHES
ANGLES ±XX°
2 PL ±XXX 3 PL ±XXXX

Solid Edge

TITLE
Vertical Linear Actuator Mount Assembly

SIZE D | DWG NO USU URC 2026 | REV A

FILE NAME: Vertical Linear Mount Assembly Drawing.dft

SCALE: | WEIGHT: | SHEET 3 OF 4

REVISION HISTORY			
REV	DESCRIPTION	DATE	APPROVED

	NAME	DATE
DRAWN	F0000975	04/15/26
CHECKED		
ENG APPR		
MGR APPR		

UNLESS OTHERWISE SPECIFIED
DIMENSIONS ARE IN INCHES
ANGLES ±XX°
2 PL ±XXX 3 PL ±XXXX

Solid Edge

TITLE
Vertical Linear Actuator Mount Assembly

SIZE D | DWG NO USU URC 2026 | REV A

FILE NAME: Vertical Linear Mount Assembly Drawing.dft

SCALE: | WEIGHT: | SHEET 4 OF 4