REVISION HISTORY			
REV	DESCRIPTION	DATE	APPROVED

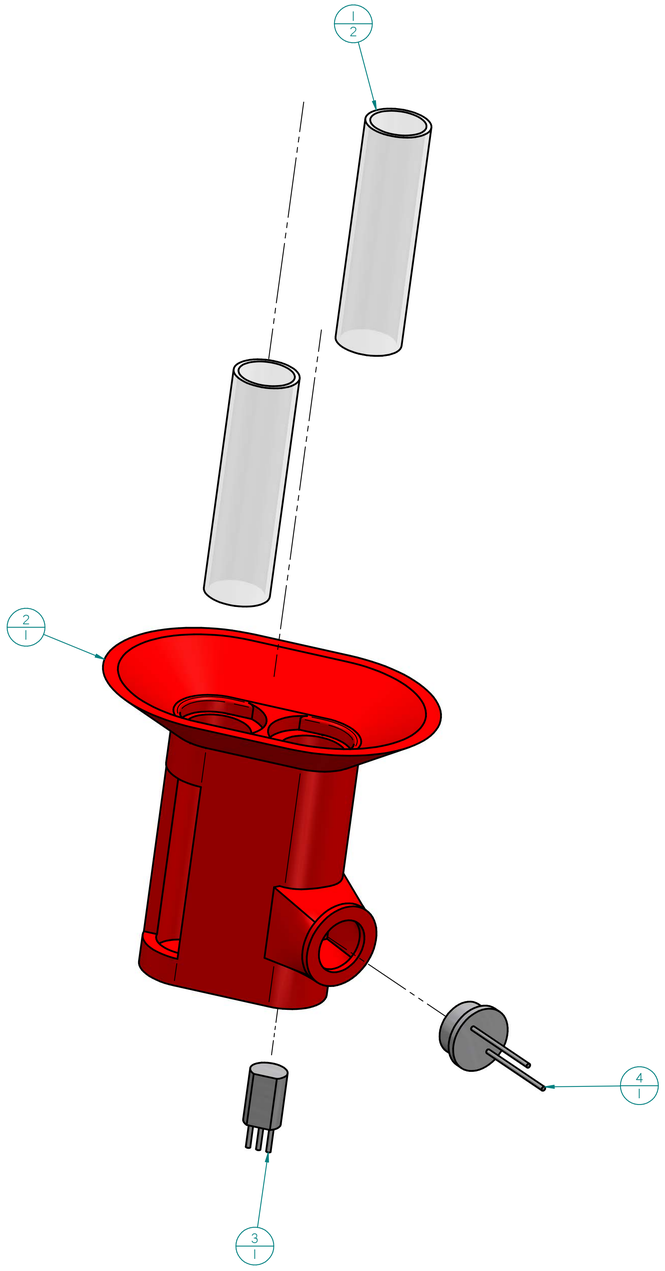

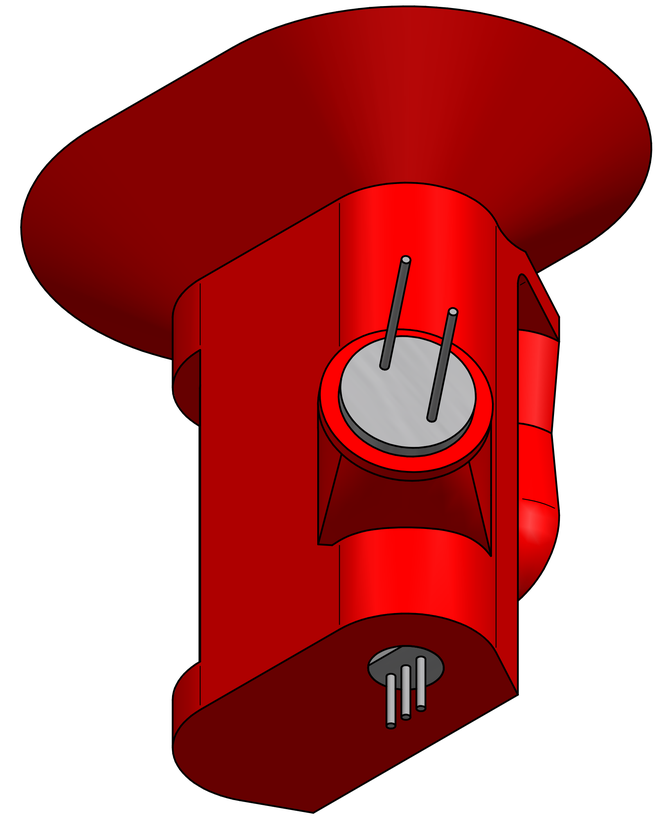

Item Number	File Name (no extension)	Author	Quantity
1	Sample bucket Acrylic Tube	F00009755	2
2	Sample Buckets	F00009755	1
3	TMP36GZ Temp sensor	F00009755	1
4	BPW21R Photodiode	F00009755	1

	NAME	DATE
DRAWN	F00009755	04/15/26
CHECKED		
ENG APPR		
MGR APPR		

UNLESS OTHERWISE SPECIFIED
DIMENSIONS ARE IN INCHES
ANGLES ±XX°
2 PL ±XXX 3 PL ±XXXX

Solid Edge

TITLE
Sample Bucket Assembly

SIZE D | DWG NO USU URC 2026 | REV A

FILE NAME: Sample Bucket Assembly Drawings.dft

SCALE: | WEIGHT: | SHEET 1 OF 4

REVISION HISTORY			
REV	DESCRIPTION	DATE	APPROVED

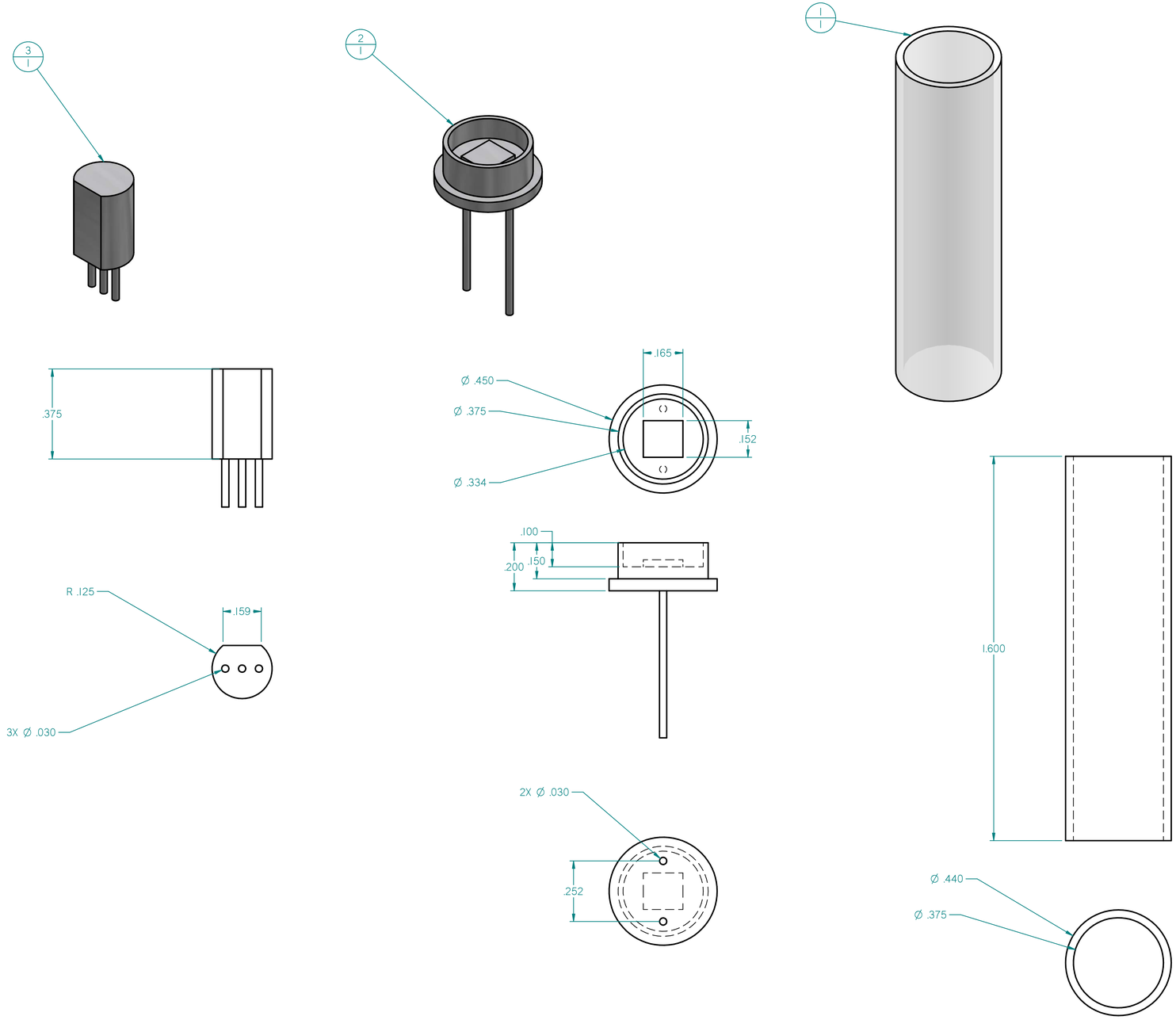

Item Number	File Name (no extension)	Author	Quantity
1	Sample bucket Acrylic Tube	F00009755	1
2	BPW21R Photodiode	F00009755	1
3	TMP36GZ Temp sensor	F00009755	1

	NAME	DATE
DRAWN	F00009755	04/15/26
CHECKED		
ENG APPR		
MGR APPR		

UNLESS OTHERWISE SPECIFIED
DIMENSIONS ARE IN INCHES
ANGLES ±XX°
2 PL ±XXX 3 PL ±XXXX

Solid Edge

TITLE
Sample Bucket Assembly

SIZE D | DWG NO USU URC 2026 | REV A

FILE NAME: Sample Bucket Assembly Drawings.dft

SCALE: | WEIGHT: | SHEET 2 OF 4

REVISION HISTORY			
REV	DESCRIPTION	DATE	APPROVED

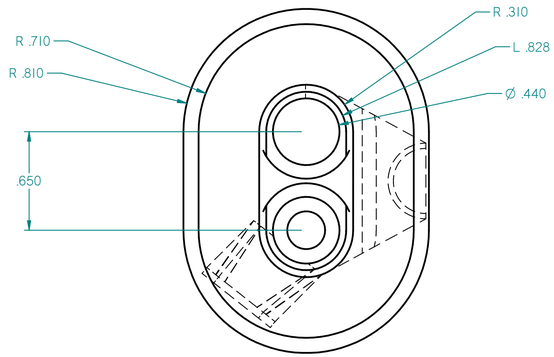

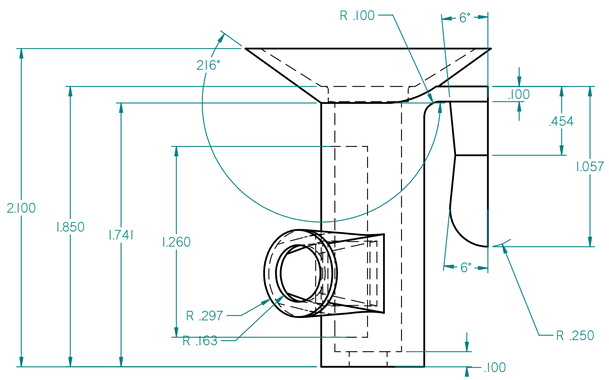

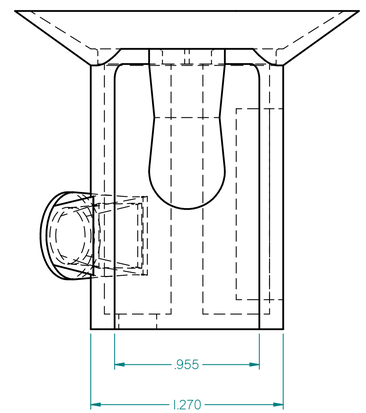

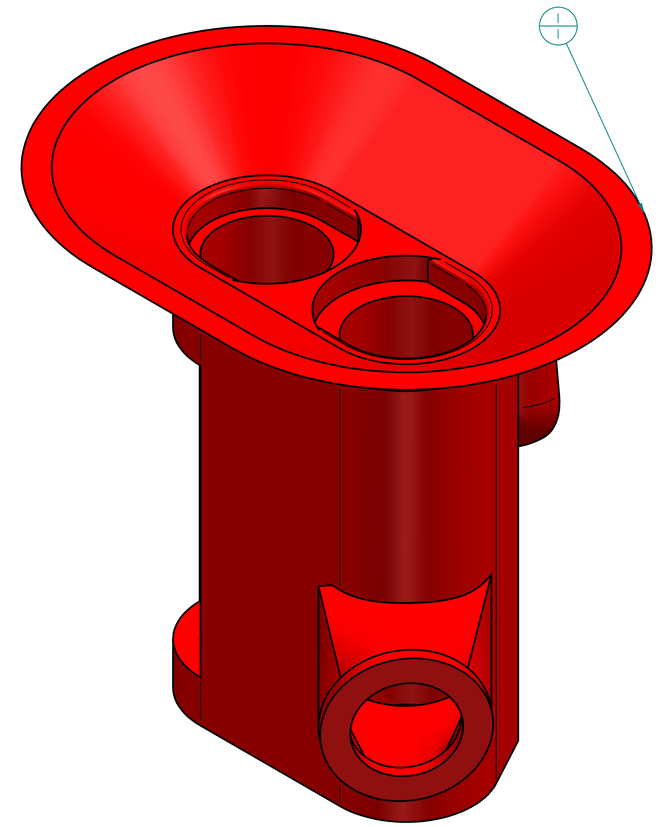

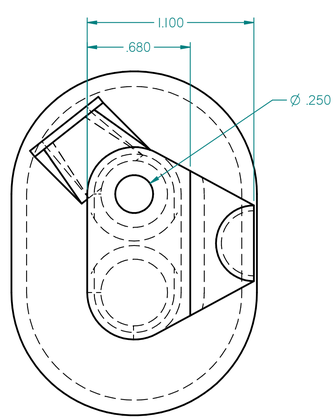

Item Number	File Name (no extension)	Author	Quantity
1	Sample Buckets	F00009755	1

	NAME	DATE
DRAWN	F00009755	04/15/26
CHECKED		
ENG APPR		
MGR APPR		

UNLESS OTHERWISE SPECIFIED
DIMENSIONS ARE IN INCHES
ANGLES ±XX°
2 PL ±XXX 3 PL ±XXXX

Solid Edge

TITLE
Sample Bucket Assembly

SIZE D | DWG NO USU URC 2026 | REV A

FILE NAME: Sample Bucket Assembly Drawings.dft

SCALE: | WEIGHT: | SHEET 3 OF 4