SPEC CPU®2017 Floating Point Rate Result

Copyright 2017-2024 Standard Performance Evaluation Corporation

My Corporation

SPECrate®2017_fp_base = 4.63

SPECrate®2017_fp_peak = Not Run

CPU2017 License: nnn (Your SPEC license number)
Test Sponsor: My Corporation
Tested by: My Corporation

Test Date: Jun-2024
Hardware Availability:
Software Availability:

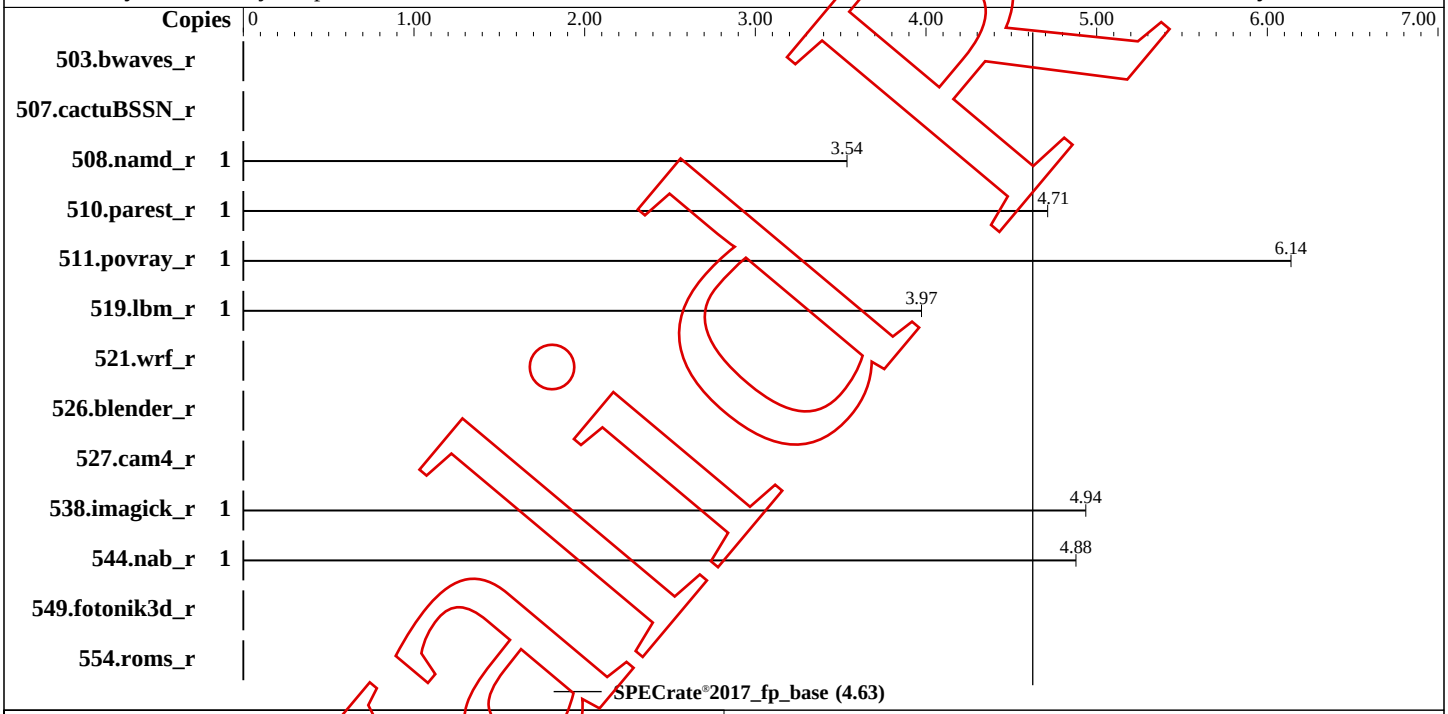

Hardware

CPU Name: 13th Gen Intel Core i9-13900KS
Max MHz:
Nominal:
Enabled: cores, 1 chip, threads/core
Orderable:
Cache L1:
L2:
L3:
Other:
Memory: 125.561 GB fixme: If using DDR4, the format is: 'N GB (N x N GB nRxn PC4-nnnnX-X)'
Storage: 3.6 TB add more disk info here
Other:

Software

OS: Ubuntu 22.04.4 LTS 6.8.0-76060800daily20240311-generic
Compiler: C/C++/Fortran: Version 7.2.1 of GCC, the GNU Compiler Collection
Parallel: No
Firmware:
File System: ext4
System State: Run level 5 (add definition here)
Base Pointers: 64-bit
Peak Pointers: Not Applicable
Other:
Power Management: --

Errors

'reportable' flag not set during run
507.cactuBSSN_r (base) did not have enough runs!
554.roms_r (base) did not have enough runs!
503.bwaves_r (base) did not have enough runs!
511.povray_r (base) did not have enough runs!
521.wrf_r (base) did not have enough runs!
526.blender_r (base) did not have enough runs!

(Continued on next page)

Invalid

SPEC CPU®2017 Floating Point Rate Result

Copyright 2017-2024 Standard Performance Evaluation Corporation

My Corporation

SPECrate®2017_fp_base = 4.63

SPECrate®2017_fp_peak = Not Run

CPU2017 License: nnn (Your SPEC license number)
Test Sponsor: My Corporation
Tested by: My Corporation

Test Date: Jun-2024
Hardware Availability:
Software Availability:

Invalid RUN

Errors (Continued)

538.imagick_r (base) did not have enough runs!
508.namd_r (base) did not have enough runs!
549.fotonik3d_r (base) did not have enough runs!
544.nab_r (base) did not have enough runs!
527.cam4_r (base) did not have enough runs!
510.parest_r (base) did not have enough runs!
519.lbm_r (base) did not have enough runs!
Unknown flags were used! See
https://www.spec.org/cpu2017/Docs/runcpu.html#flagsurl
for information about how to get rid of this error.

Results Table

Benchmark	Base							Peak						
	Copies	Seconds	Ratio	Seconds	Ratio	Seconds	Ratio	Copies	Seconds	Ratio	Seconds	Ratio	Seconds	Ratio
503.bwaves_r														
507.cactuBSSN_r														
508.namd_r	1	**269**	**3.54**											
510.parest_r	1	**555**	**4.71**											
511.povray_r	1	**380**	**6.14**											
519.lbm_r	1	**265**	**3.97**											
521.wrf_r														
526.blender_r														
527.cam4_r														
538.imagick_r	1	**504**	**4.94**											
544.nab_r	1	**345**	**4.88**											
549.fotonik3d_r														
554.roms_r														

SPECrate®2017_fp_base = 4.63

SPECrate®2017_fp_peak = Not Run

Results appear in the order in which they were run. Bold underlined text indicates a median measurement.

Environment Variables Notes

```
Environment variables set by runcpu before the start of the run:
LD_LIBRARY_PATH = "/usr/lib64/:/usr/lib/:/lib64"
```

Invalid RUN

Platform Notes

```
Sysinfo program /mnt/seconddrive/Code/seguecg-root/segue-lfi/spec2017/bin/sysinfo
Rev: r6365 of 2019-08-21 295195f888a3d7edb1e6e46a485a0011
running on shr-work Sun Jun 23 12:02:52 2024

SUT (System Under Test) info as seen by some common utilities.
For more information on this section, see
   https://www.spec.org/cpu2017/Docs/config.html#sysinfo

From /proc/cpuinfo
   model name : 13th Gen Intel(R) Core(TM) i9-13900KS
      1  "physical id"s (chips)
      24 "processors"
   cores, siblings (Caution: counting these is hw and system dependent. The following
   excerpts from /proc/cpuinfo might not be reliable.  Use with caution.)
      cpu cores : 24
      siblings  : 24
      physical 0: cores 0 4 8 12 16 20 24 28 32 33 34 35 36 37 38 39 40 41 42 43 44 45 46
      47

From lscpu:
     Architecture:                    x86_64
     CPU op-mode(s):                  32-bit, 64-bit
     Address sizes:                   46 bits physical, 48 bits virtual
     Byte Order:                      Little Endian
     CPU(s):                          32
     On-line CPU(s) list:             0,2,4,6,8,10,12,14,16-31
     Off-line CPU(s) list:            1,3,5,7,9,11,13,15
     Vendor ID:                       GenuineIntel
     Model name:                      13th Gen Intel(R) Core(TM) i9-13900KS
     CPU family:                      6
     Model:                           183
     Thread(s) per core:              1
     Core(s) per socket:              24
     Socket(s):                       1
     Stepping:                        1
     CPU max MHz:                     6000.0000
     CPU min MHz:                     0.0000
     BogoMIPS:                        6374.40
     Flags:                           fpu vme de pse tsc msr pae mce cx8 apic sep mtrr
      pge mca cmov pat pse36 clflush dts acpi mmx fxsr sse sse2 ss ht tm pbe syscall nx
      pdpe1gb rdtscp lm constant_tsc art arch_perfmon pebs bts rep_good nopl xtopology
      nonstop_tsc cpuid aperfmperf tsc_known_freq pni pclmulqdq dtes64 monitor ds_cpl vmx
      smx est tm2 ssse3 sdbg fma cx16 xtpr pdcm sse4_1 sse4_2 x2apic movbe popcnt
      tsc_deadline_timer aes xsave avx f16c rdrand lahf_lm abm 3dnowprefetch cpuid_fault
      ssbd ibrs ibpb stibp ibrs_enhanced tpr_shadow flexpriority ept vpid ept_ad fsgsbase
      tsc_adjust bmi1 avx2 smep bmi2 erms invpcid rdseed adx smap clflushopt clwb intel_pt
```

(Continued on next page)

Platform Notes (Continued)

```
      sha_ni xsaveopt xsavec xgetbv1 xsaves split_lock_detect user_shstk avx_vnni dtherm
      ida arat pln pts hwp hwp_notify hwp_act_window hwp_epp hwp_pkg_req hfi vnmi umip pku
      ospke waitpkg gfni vaes vpclmulqdq tme rdpid movdiri movdir64b fsrm md_clear
      serialize pconfig arch_lbr ibt flush_l1d arch_capabilities
      Virtualization:                  VT-x
      L1d cache:                       896 KiB (24 instances)
      L1i cache:                       1.3 MiB (24 instances)
      L2 cache:                        32 MiB (12 instances)
      L3 cache:                        36 MiB (1 instance)
      NUMA node(s):                    1
      NUMA node0 CPU(s):               0,2,4,6,8,10,12,14,16-31
      Vulnerability Gather data sampling: Not affected
      Vulnerability Itlb multihit:     Not affected
      Vulnerability L1tf:              Not affected
      Vulnerability Mds:               Not affected
      Vulnerability Meltdown:          Not affected
      Vulnerability Mmio stale data:   Not affected
      Vulnerability Retbleed:          Not affected
      Vulnerability Spec rstack overflow: Not affected
      Vulnerability Spec store bypass: Mitigation; Speculative Store Bypass disabled
      via prctl
      Vulnerability Spectre v1:        Mitigation; usercopy/swapgs barriers and __user
      pointer sanitization
      Vulnerability Spectre v2:        Mitigation; Enhanced / Automatic IBRS, IBPB
      conditional, RSB filling, PBRSB-eIBRS SW sequence
      Vulnerability Srbds:             Not affected
      Vulnerability Tsx async abort:   Not affected

  /proc/cpuinfo cache data
     cache size : 36864 KB

  From numactl --hardware  WARNING: a numactl 'node' might or might not correspond to a
  physical chip.

  From /proc/meminfo
     MemTotal:       131660528 kB
     HugePages_Total:       0
     Hugepagesize:       2048 kB

  /usr/bin/lsb_release -d
     Ubuntu 22.04.4 LTS

  From /etc/*release* /etc/*version*
     debian_version: bookworm/sid
     os-release:
        PRETTY_NAME="Ubuntu 22.04.4 LTS"
        NAME="Ubuntu"
```


(Continued on next page)

Preliminary

Platform Notes (Continued)

```
      VERSION_ID="22.04"
      VERSION="22.04.4 LTS (Jammy Jellyfish)"
      VERSION_CODENAME=jammy
      ID=ubuntu
      ID_LIKE=debian
      HOME_URL="https://www.ubuntu.com/"

uname -a:
   Linux shr-work 6.8.0-76060800daily20240311-generic
   #202403110203~1715181801~22.04~aba43ee~dev-Ubuntu SMP PREEMPT_DY x86_64 x86_64 x86_64
   GNU/Linux

Kernel self-reported vulnerability status:

gather_data_sampling:                    Not affected
itlb_multihit:                           Not affected
CVE-2018-3620 (L1 Terminal Fault):       Not affected
Microarchitectural Data Sampling:        Not affected
CVE-2017-5754 (Meltdown):                Not affected
mmio_stale_data:                         Not affected
retbleed:                                Not affected
spec_rstack_overflow:                    Not affected
CVE-2018-3639 (Speculative Store Bypass): Mitigation: Speculative Store Bypass disabled
                                          via prctl
CVE-2017-5753 (Spectre variant 1):       Mitigation: usercopy/swapgs barriers and __user
                                          pointer sanitization
CVE-2017-5715 (Spectre variant 2):       Mitigation: Enhanced / Automatic IBRS, IBPB:
                                          conditional, RSB filling, PBRSB-eIBRS: SW
                                          sequence
srbds:                                   Not affected
tsx_async_abort:                         Not affected

run-level 5 Jun 22 18:34

SPEC is set to: /mnt/seconddrive/Code/seguecg-root/segue-lfi/spec2017
   Filesystem     Type  Size  Used Avail Use% Mounted on
   /dev/nvme0n1p1 ext4  3.6T  702G  2.8T  21% /mnt/seconddrive

From /sys/devices/virtual/dmi/id
    BIOS:    System76 FH Z5 01/25/2024
    Vendor:  System76
    Product: Thelio Mira
    Product Family: Z790 MB

Cannot run dmidecode; consider saying (as root)
   chmod +s /usr/sbin/dmidecode
```


(Continued on next page)

Invalid RT

Copyright 2017-2024 Standard Performance Evaluation Corporation

Platform Notes (Continued)

```
 (End of data from sysinfo program)
```

Compiler Version Notes

```
==============================================================================
C      | 519.lbm_r(base pass 0)
------------------------------------------------------------------------------
Using built-in specs.
COLLECT_GCC=/opt/native-gcc/bin/internal-x86_64-linux-musl-gcc
COLLECT_LTO_WRAPPER=/opt/native-gcc/bin/../libexec/gcc/x86_64-linux-musl/13.2.0/lto-wrapper
Target: x86_64-linux-musl
Configured with: ../gcc/configure --target=x86_64-linux-musl --disable-docs
  --disable-bootstrap --disable-libssp --disable-multilib --disable-shared
  --enable-languages=c,c++ --enable-lto
  --prefix=/home/zyedidia/programming/lfi/toolchain/lfi-gcc/native-gcc
  --with-pkgversion=LFI
Thread model: posix
Supported LTO compression algorithms: zlib zstd
gcc version 13.2.0 (LFI)
specmake[1]: Leaving directory
  '/mnt/seconddrive/Code/seguecg-root/segue-lfi/spec2017/benchspec/CPU/519.lbm_r/build/build_base_gcc-m64.0000'
------------------------------------------------------------------------------

==============================================================================
C      | 538.imagick_r(base pass 0)
------------------------------------------------------------------------------
Using built-in specs.
COLLECT_GCC=/opt/native-gcc/bin/internal-x86_64-linux-musl-gcc
COLLECT_LTO_WRAPPER=/opt/native-gcc/bin/../libexec/gcc/x86_64-linux-musl/13.2.0/lto-wrapper
Target: x86_64-linux-musl
Configured with: ../gcc/configure --target=x86_64-linux-musl --disable-docs
  --disable-bootstrap --disable-libssp --disable-multilib --disable-shared
  --enable-languages=c,c++ --enable-lto
  --prefix=/home/zyedidia/programming/lfi/toolchain/lfi-gcc/native-gcc
  --with-pkgversion=LFI
Thread model: posix
Supported LTO compression algorithms: zlib zstd
gcc version 13.2.0 (LFI)
specmake[1]: Leaving directory
  '/mnt/seconddrive/Code/seguecg-root/segue-lfi/spec2017/benchspec/CPU/538.imagick_r/build/build_base_gcc-m64.0000'
------------------------------------------------------------------------------

==============================================================================
C      | 544.nab_r(base pass 0)
------------------------------------------------------------------------------
Using built-in specs.
```

(Continued on next page)

Invalid Run

Compiler Version Notes (Continued)

```
COLLECT_GCC=/opt/native-gcc/bin/internal-x86_64-linux-musl-gcc
COLLECT_LTO_WRAPPER=/opt/native-gcc/bin/../libexec/gcc/x86_64-linux-musl/13.2.0/lto-wrapper
Target: x86_64-linux-musl
Configured with: ../gcc/configure --target=x86_64-linux-musl --disable-docs
  --disable-bootstrap --disable-libssp --disable-multilib --disable-shared
  --enable-languages=c,c++ --enable-lto
  --prefix=/home/zyedidia/programming/lfi/toolchain/lfi-gcc/native-gcc
  --with-pkgversion=LFI
Thread model: posix
Supported LTO compression algorithms: zlib zstd
gcc version 13.2.0 (LFI)
specmake[1]: Leaving directory
  '/mnt/seconddrive/Code/seguecg-root/segue-lfi/spec2017/benchspec/CPU/544.nab_r/build/build_base_gcc-m64.0000'
------------------------------------------------------------------------------

==============================================================================
C      | 519.lbm_r(base pass )
------------------------------------------------------------------------------
specmake[1]: Entering directory
  '/mnt/seconddrive/Code/seguecg-root/segue-lfi/spec2017/benchspec/CPU/519.lbm_r/build/build_base_gcc-m64.0000'
------------------------------------------------------------------------------

==============================================================================
C      | 538.imagick_r(base pass )
------------------------------------------------------------------------------
specmake[1]: Entering directory
  '/mnt/seconddrive/Code/seguecg-root/segue-lfi/spec2017/benchspec/CPU/538.imagick_r/build/build_base_gcc-m64.0000'
------------------------------------------------------------------------------

==============================================================================
C      | 544.nab_r(base pass )
------------------------------------------------------------------------------
specmake[1]: Entering directory
  '/mnt/seconddrive/Code/seguecg-root/segue-lfi/spec2017/benchspec/CPU/544.nab_r/build/build_base_gcc-m64.0000'
------------------------------------------------------------------------------

==============================================================================
C      | 519.lbm_r(base pass 0)
------------------------------------------------------------------------------
Using built-in specs.
COLLECT_GCC=/opt/native-gcc/bin/internal-x86_64-linux-musl-gcc
COLLECT_LTO_WRAPPER=/opt/native-gcc/bin/../libexec/gcc/x86_64-linux-musl/13.2.0/lto-wrapper
Target: x86_64-linux-musl
Configured with: ../gcc/configure --target=x86_64-linux-musl --disable-docs
  --disable-bootstrap --disable-libssp --disable-multilib --disable-shared
  --enable-languages=c,c++ --enable-lto
  --prefix=/home/zyedidia/programming/lfi/toolchain/lfi-gcc/native-gcc
```

(Continued on next page)

Untitled

Compiler Version Notes (Continued)

```
  --with-pkgversion=LFI
Thread model: posix
Supported LTO compression algorithms: zlib zstd
gcc version 13.2.0 (LFI)
specmake[1]: Leaving directory
  '/mnt/seconddrive/Code/seguecg-root/segue-lfi/spec2017/benchspec/CPU/519.lbm_r/build/build_base_gcc-m64.0000'
------------------------------------------------------------------------------

==============================================================================
C      | 538.imagick_r(base pass 0)
------------------------------------------------------------------------------
Using built-in specs.
COLLECT_GCC=/opt/native-gcc/bin/internal-x86_64-linux-musl-gcc
COLLECT_LTO_WRAPPER=/opt/native-gcc/bin/../libexec/gcc/x86_64-linux-musl/13.2.0/lto-wrapper
Target: x86_64-linux-musl
Configured with: ../gcc/configure --target=x86_64-linux-musl --disable-docs
  --disable-bootstrap --disable-libssp --disable-multilib --disable-shared
  --enable-languages=c,c++ --enable-lto
  --prefix=/home/zyedidia/programming/lfi/toolchain/lfi-gcc/native-gcc
  --with-pkgversion=LFI
Thread model: posix
Supported LTO compression algorithms: zlib zstd
gcc version 13.2.0 (LFI)
specmake[1]: Leaving directory
  '/mnt/seconddrive/Code/seguecg-root/segue-lfi/spec2017/benchspec/CPU/538.imagick_r/build/build_base_gcc-m64.0000'
------------------------------------------------------------------------------

==============================================================================
C      | 544.nab_r(base pass 0)
------------------------------------------------------------------------------
Using built-in specs.
COLLECT_GCC=/opt/native-gcc/bin/internal-x86_64-linux-musl-gcc
COLLECT_LTO_WRAPPER=/opt/native-gcc/bin/../libexec/gcc/x86_64-linux-musl/13.2.0/lto-wrapper
Target: x86_64-linux-musl
Configured with: ../gcc/configure --target=x86_64-linux-musl --disable-docs
  --disable-bootstrap --disable-libssp --disable-multilib --disable-shared
  --enable-languages=c,c++ --enable-lto
  --prefix=/home/zyedidia/programming/lfi/toolchain/lfi-gcc/native-gcc
  --with-pkgversion=LFI
Thread model: posix
Supported LTO compression algorithms: zlib zstd
gcc version 13.2.0 (LFI)
specmake[1]: Leaving directory
  '/mnt/seconddrive/Code/seguecg-root/segue-lfi/spec2017/benchspec/CPU/544.nab_r/build/build_base_gcc-m64.0000'
------------------------------------------------------------------------------

==============================================================================
```


(Continued on next page)

Invalid Run

Compiler Version Notes (Continued)

```
C      | 519.lbm_r(base pass )
------------------------------------------------------------------------------
specmake[1]: Entering directory
  '/mnt/seconddrive/Code/seguecg-root/segue-lfi/spec2017/benchspec/CPU/519.lbm_r/build/build_base_gcc-m64.0000'
------------------------------------------------------------------------------

==============================================================================
C      | 538.imagick_r(base pass )
------------------------------------------------------------------------------
specmake[1]: Entering directory
  '/mnt/seconddrive/Code/seguecg-root/segue-lfi/spec2017/benchspec/CPU/538.imagick_r/build/build_base_gcc-m64.0000'
------------------------------------------------------------------------------

==============================================================================
C      | 544.nab_r(base pass )
------------------------------------------------------------------------------
specmake[1]: Entering directory
  '/mnt/seconddrive/Code/seguecg-root/segue-lfi/spec2017/benchspec/CPU/544.nab_r/build/build_base_gcc-m64.0000'
------------------------------------------------------------------------------

==============================================================================
C      | 519.lbm_r(base pass 0)
------------------------------------------------------------------------------
Using built-in specs.
COLLECT_GCC=/opt/native-gcc/bin/internal-x86_64-linux-musl-gcc
COLLECT_LTO_WRAPPER=/opt/native-gcc/bin/../libexec/gcc/x86_64-linux-musl/13.2.0/lto-wrapper
Target: x86_64-linux-musl
Configured with: ../gcc/configure --target=x86_64-linux-musl --disable-docs
  --disable-bootstrap --disable-libssp --disable-multilib --disable-shared
  --enable-languages=c,c++ --enable-lto
  --prefix=/home/zyedidia/programming/lfi/toolchain/lfi-gcc/native-gcc
  --with-pkgversion=LFI
Thread model: posix
Supported LTO compression algorithms: zlib zstd
gcc version 13.2.0 (LFI)
specmake[1]: Leaving directory
  '/mnt/seconddrive/Code/seguecg-root/segue-lfi/spec2017/benchspec/CPU/519.lbm_r/build/build_base_gcc-m64.0000'
------------------------------------------------------------------------------

==============================================================================
C      | 538.imagick_r(base pass 0)
------------------------------------------------------------------------------
Using built-in specs.
COLLECT_GCC=/opt/native-gcc/bin/internal-x86_64-linux-musl-gcc
COLLECT_LTO_WRAPPER=/opt/native-gcc/bin/../libexec/gcc/x86_64-linux-musl/13.2.0/lto-wrapper
Target: x86_64-linux-musl
Configured with: ../gcc/configure --target=x86_64-linux-musl --disable-docs
```

(Continued on next page)

Invalid Run

Compiler Version Notes (Continued)

```
  --disable-bootstrap --disable-libssp --disable-multilib --disable-shared
  --enable-languages=c,c++ --enable-lto
  --prefix=/home/zyedidia/programming/lfi/toolchain/lfi-gcc/native-gcc
  --with-pkgversion=LFI
Thread model: posix
Supported LTO compression algorithms: zlib zstd
gcc version 13.2.0 (LFI)
specmake[1]: Leaving directory
  '/mnt/seconddrive/Code/seguecg-root/segue-lfi/spec2017/benchspec/CPU/538.imagick_r/build/build_base_gcc-m64.0000'
------------------------------------------------------------------------------

==============================================================================
C      | 544.nab_r(base pass 0)
------------------------------------------------------------------------------
Using built-in specs.
COLLECT_GCC=/opt/native-gcc/bin/internal-x86_64-linux-musl-gcc
COLLECT_LTO_WRAPPER=/opt/native-gcc/bin/../libexec/gcc/x86_64-linux-musl/13.2.0/lto-wrapper
Target: x86_64-linux-musl
Configured with: ../gcc/configure --target=x86_64-linux-musl --disable-docs
  --disable-bootstrap --disable-libssp --disable-multilib --disable-shared
  --enable-languages=c,c++ --enable-lto
  --prefix=/home/zyedidia/programming/lfi/toolchain/lfi-gcc/native-gcc
  --with-pkgversion=LFI
Thread model: posix
Supported LTO compression algorithms: zlib zstd
gcc version 13.2.0 (LFI)
specmake[1]: Leaving directory
  '/mnt/seconddrive/Code/seguecg-root/segue-lfi/spec2017/benchspec/CPU/544.nab_r/build/build_base_gcc-m64.0000'
------------------------------------------------------------------------------

==============================================================================
C      | 519.lbm_r(base pass )
------------------------------------------------------------------------------
specmake[1]: Entering directory
  '/mnt/seconddrive/Code/seguecg-root/segue-lfi/spec2017/benchspec/CPU/519.lbm_r/build/build_base_gcc-m64.0000'
------------------------------------------------------------------------------

==============================================================================
C      | 538.imagick_r(base pass )
------------------------------------------------------------------------------
specmake[1]: Entering directory
  '/mnt/seconddrive/Code/seguecg-root/segue-lfi/spec2017/benchspec/CPU/538.imagick_r/build/build_base_gcc-m64.0000'
------------------------------------------------------------------------------

==============================================================================
C      | 544.nab_r(base pass )
------------------------------------------------------------------------------
```

(Continued on next page)

Invalid Run

Copyright 2017-2024 Standard Performance Evaluation Corporation

Compiler Version Notes (Continued)

```
specmake[1]: Entering directory
  '/mnt/seconddrive/Code/seguecg-root/segue-lfi/spec2017/benchspec/CPU/544.nab_r/build/build_base_gcc-m64.0000'
------------------------------------------------------------------------------

==============================================================================
C      | 519.lbm_r(base pass 0)
------------------------------------------------------------------------------
Using built-in specs.
COLLECT_GCC=/opt/native-gcc/bin/internal-x86_64-linux-musl-gcc
COLLECT_LTO_WRAPPER=/opt/native-gcc/bin/../libexec/gcc/x86_64-linux-musl/13.2.0/lto-wrapper
Target: x86_64-linux-musl
Configured with: ../gcc/configure --target=x86_64-linux-musl --disable-docs
  --disable-bootstrap --disable-libssp --disable-multilib --disable-shared
  --enable-languages=c,c++ --enable-lto
  --prefix=/home/zyedidia/programming/lfi/toolchain/lfi-gcc/native-gcc
  --with-pkgversion=LFI
Thread model: posix
Supported LTO compression algorithms: zlib zstd
gcc version 13.2.0 (LFI)
specmake[1]: Leaving directory
  '/mnt/seconddrive/Code/seguecg-root/segue-lfi/spec2017/benchspec/CPU/519.lbm_r/build/build_base_gcc-m64.0000'
------------------------------------------------------------------------------

==============================================================================
C      | 538.imagick_r(base pass 0)
------------------------------------------------------------------------------
Using built-in specs.
COLLECT_GCC=/opt/native-gcc/bin/internal-x86_64-linux-musl-gcc
COLLECT_LTO_WRAPPER=/opt/native-gcc/bin/../libexec/gcc/x86_64-linux-musl/13.2.0/lto-wrapper
Target: x86_64-linux-musl
Configured with: ../gcc/configure --target=x86_64-linux-musl --disable-docs
  --disable-bootstrap --disable-libssp --disable-multilib --disable-shared
  --enable-languages=c,c++ --enable-lto
  --prefix=/home/zyedidia/programming/lfi/toolchain/lfi-gcc/native-gcc
  --with-pkgversion=LFI
Thread model: posix
Supported LTO compression algorithms: zlib zstd
gcc version 13.2.0 (LFI)
specmake[1]: Leaving directory
  '/mnt/seconddrive/Code/seguecg-root/segue-lfi/spec2017/benchspec/CPU/538.imagick_r/build/build_base_gcc-m64.0000'
------------------------------------------------------------------------------

==============================================================================
C      | 544.nab_r(base pass 0)
------------------------------------------------------------------------------
Using built-in specs.
COLLECT_GCC=/opt/native-gcc/bin/internal-x86_64-linux-musl-gcc
```

(Continued on next page)

Invalid Run

Compiler Version Notes (Continued)

```
COLLECT_LTO_WRAPPER=/opt/native-gcc/bin/../libexec/gcc/x86_64-linux-musl/13.2.0/lto-wrapper
Target: x86_64-linux-musl
Configured with: ../gcc/configure --target=x86_64-linux-musl --disable-docs
  --disable-bootstrap --disable-libssp --disable-multilib --disable-shared
  --enable-languages=c,c++ --enable-lto
  --prefix=/home/zyedidia/programming/lfi/toolchain/lfi-gcc/native-gcc
  --with-pkgversion=LFI
Thread model: posix
Supported LTO compression algorithms: zlib zstd
gcc version 13.2.0 (LFI)
specmake[1]: Leaving directory
  '/mnt/seconddrive/Code/seguecg-root/segue-lfi/spec2017/benchspec/CPU/544.nab_r/build/build_base_gcc-m64.0000'
------------------------------------------------------------------------------

==============================================================================
C      | 519.lbm_r(base pass )
------------------------------------------------------------------------------
specmake[1]: Entering directory
  '/mnt/seconddrive/Code/seguecg-root/segue-lfi/spec2017/benchspec/CPU/519.lbm_r/build/build_base_gcc-m64.0000'
------------------------------------------------------------------------------

==============================================================================
C      | 538.imagick_r(base pass )
------------------------------------------------------------------------------
specmake[1]: Entering directory
  '/mnt/seconddrive/Code/seguecg-root/segue-lfi/spec2017/benchspec/CPU/538.imagick_r/build/build_base_gcc-m64.0000'
------------------------------------------------------------------------------

==============================================================================
C      | 544.nab_r(base pass )
------------------------------------------------------------------------------
specmake[1]: Entering directory
  '/mnt/seconddrive/Code/seguecg-root/segue-lfi/spec2017/benchspec/CPU/544.nab_r/build/build_base_gcc-m64.0000'
------------------------------------------------------------------------------

==============================================================================
C      | 519.lbm_r(base pass 0)
------------------------------------------------------------------------------
Using built-in specs.
COLLECT_GCC=/opt/native-gcc/bin/internal-x86_64-linux-musl-gcc
COLLECT_LTO_WRAPPER=/opt/native-gcc/bin/../libexec/gcc/x86_64-linux-musl/13.2.0/lto-wrapper
Target: x86_64-linux-musl
Configured with: ../gcc/configure --target=x86_64-linux-musl --disable-docs
  --disable-bootstrap --disable-libssp --disable-multilib --disable-shared
  --enable-languages=c,c++ --enable-lto
  --prefix=/home/zyedidia/programming/lfi/toolchain/lfi-gcc/native-gcc
  --with-pkgversion=LFI
```

(Continued on next page)

Invalid

Compiler Version Notes (Continued)

```
Thread model: posix
Supported LTO compression algorithms: zlib zstd
gcc version 13.2.0 (LFI)
specmake[1]: Leaving directory
  '/mnt/seconddrive/Code/seguecg-root/segue-lfi/spec2017/benchspec/CPU/519.lbm_r/build/build_base_gcc-m64.0000'
------------------------------------------------------------------------------

==============================================================================
C      | 538.imagick_r(base pass 0)
------------------------------------------------------------------------------
Using built-in specs.
COLLECT_GCC=/opt/native-gcc/bin/internal-x86_64-linux-musl-gcc
COLLECT_LTO_WRAPPER=/opt/native-gcc/bin/../libexec/gcc/x86_64-linux-musl/13.2.0/lto-wrapper
Target: x86_64-linux-musl
Configured with: ../gcc/configure --target=x86_64-linux-musl --disable-docs
  --disable-bootstrap --disable-libssp --disable-multilib --disable-shared
  --enable-languages=c,c++ --enable-lto
  --prefix=/home/zyedidia/programming/lfi/toolchain/lfi-gcc/native-gcc
  --with-pkgversion=LFI
Thread model: posix
Supported LTO compression algorithms: zlib zstd
gcc version 13.2.0 (LFI)
specmake[1]: Leaving directory
  '/mnt/seconddrive/Code/seguecg-root/segue-lfi/spec2017/benchspec/CPU/538.imagick_r/build/build_base_gcc-m64.0000'
------------------------------------------------------------------------------

==============================================================================
C      | 544.nab_r(base pass 0)
------------------------------------------------------------------------------
Using built-in specs.
COLLECT_GCC=/opt/native-gcc/bin/internal-x86_64-linux-musl-gcc
COLLECT_LTO_WRAPPER=/opt/native-gcc/bin/../libexec/gcc/x86_64-linux-musl/13.2.0/lto-wrapper
Target: x86_64-linux-musl
Configured with: ../gcc/configure --target=x86_64-linux-musl --disable-docs
  --disable-bootstrap --disable-libssp --disable-multilib --disable-shared
  --enable-languages=c,c++ --enable-lto
  --prefix=/home/zyedidia/programming/lfi/toolchain/lfi-gcc/native-gcc
  --with-pkgversion=LFI
Thread model: posix
Supported LTO compression algorithms: zlib zstd
gcc version 13.2.0 (LFI)
specmake[1]: Leaving directory
  '/mnt/seconddrive/Code/seguecg-root/segue-lfi/spec2017/benchspec/CPU/544.nab_r/build/build_base_gcc-m64.0000'
------------------------------------------------------------------------------

==============================================================================
C      | 519.lbm_r(base pass )
```


(Continued on next page)

Invalid Run

Compiler Version Notes (Continued)

```
------------------------------------------------------------------------------
specmake[1]: Entering directory
  '/mnt/seconddrive/Code/seguecg-root/segue-lfi/spec2017/benchspec/CPU/519.lbm_r/build/build_base_gcc-m64.0000'
------------------------------------------------------------------------------

==============================================================================
C      | 538.imagick_r(base pass )
------------------------------------------------------------------------------
specmake[1]: Entering directory
  '/mnt/seconddrive/Code/seguecg-root/segue-lfi/spec2017/benchspec/CPU/538.imagick_r/build/build_base_gcc-m64.0000'
------------------------------------------------------------------------------

==============================================================================
C      | 544.nab_r(base pass )
------------------------------------------------------------------------------
specmake[1]: Entering directory
  '/mnt/seconddrive/Code/seguecg-root/segue-lfi/spec2017/benchspec/CPU/544.nab_r/build/build_base_gcc-m64.0000'
------------------------------------------------------------------------------

==============================================================================
C      | 519.lbm_r(base pass 0)
------------------------------------------------------------------------------
Using built-in specs.
COLLECT_GCC=/opt/native-gcc/bin/internal-x86_64-linux-musl-gcc
COLLECT_LTO_WRAPPER=/opt/native-gcc/bin/../libexec/gcc/x86_64-linux-musl/13.2.0/lto-wrapper
Target: x86_64-linux-musl
Configured with: ../gcc/configure --target=x86_64-linux-musl --disable-docs
  --disable-bootstrap --disable-libssp --disable-multilib --disable-shared
  --enable-languages=c,c++ --enable-lto
  --prefix=/home/zyedidia/programming/lfi/toolchain/lfi-gcc/native-gcc
  --with-pkgversion=LFI
Thread model: posix
Supported LTO compression algorithms: zlib zstd
gcc version 13.2.0 (LFI)
specmake[1]: Leaving directory
  '/mnt/seconddrive/Code/seguecg-root/segue-lfi/spec2017/benchspec/CPU/519.lbm_r/build/build_base_gcc-m64.0000'
------------------------------------------------------------------------------

==============================================================================
C      | 538.imagick_r(base pass 0)
------------------------------------------------------------------------------
Using built-in specs.
COLLECT_GCC=/opt/native-gcc/bin/internal-x86_64-linux-musl-gcc
COLLECT_LTO_WRAPPER=/opt/native-gcc/bin/../libexec/gcc/x86_64-linux-musl/13.2.0/lto-wrapper
Target: x86_64-linux-musl
Configured with: ../gcc/configure --target=x86_64-linux-musl --disable-docs
  --disable-bootstrap --disable-libssp --disable-multilib --disable-shared
```

(Continued on next page)

Untuned Untuned

Compiler Version Notes (Continued)

```
  --enable-languages=c,c++ --enable-lto
  --prefix=/home/zyedidia/programming/lfi/toolchain/lfi-gcc/native-gcc
  --with-pkgversion=LFI
Thread model: posix
Supported LTO compression algorithms: zlib zstd
gcc version 13.2.0 (LFI)
specmake[1]: Leaving directory
  '/mnt/seconddrive/Code/seguecg-root/segue-lfi/spec2017/benchspec/CPU/538.imagick_r/build/build_base_gcc-m64.0000'
------------------------------------------------------------------------------

==============================================================================
C      | 544.nab_r(base pass 0)
------------------------------------------------------------------------------
Using built-in specs.
COLLECT_GCC=/opt/native-gcc/bin/internal-x86_64-linux-musl-gcc
COLLECT_LTO_WRAPPER=/opt/native-gcc/bin/../libexec/gcc/x86_64-linux-musl/13.2.0/lto-wrapper
Target: x86_64-linux-musl
Configured with: ../gcc/configure --target=x86_64-linux-musl --disable-docs
  --disable-bootstrap --disable-libssp --disable-multilib --disable-shared
  --enable-languages=c,c++ --enable-lto
  --prefix=/home/zyedidia/programming/lfi/toolchain/lfi-gcc/native-gcc
  --with-pkgversion=LFI
Thread model: posix
Supported LTO compression algorithms: zlib zstd
gcc version 13.2.0 (LFI)
specmake[1]: Leaving directory
  '/mnt/seconddrive/Code/seguecg-root/segue-lfi/spec2017/benchspec/CPU/544.nab_r/build/build_base_gcc-m64.0000'
------------------------------------------------------------------------------

==============================================================================
C      | 519.lbm_r(base pass )
------------------------------------------------------------------------------
specmake[1]: Entering directory
  '/mnt/seconddrive/Code/seguecg-root/segue-lfi/spec2017/benchspec/CPU/519.lbm_r/build/build_base_gcc-m64.0000'
------------------------------------------------------------------------------

==============================================================================
C      | 538.imagick_r(base pass )
------------------------------------------------------------------------------
specmake[1]: Entering directory
  '/mnt/seconddrive/Code/seguecg-root/segue-lfi/spec2017/benchspec/CPU/538.imagick_r/build/build_base_gcc-m64.0000'
------------------------------------------------------------------------------

==============================================================================
C      | 544.nab_r(base pass )
------------------------------------------------------------------------------
specmake[1]: Entering directory
```

(Continued on next page)

Tentative

Compiler Version Notes (Continued)

```
  '/mnt/seconddrive/Code/seguecg-root/segue-lfi/spec2017/benchspec/CPU/544.nab_r/build/build_base_gcc-m64.0000'
------------------------------------------------------------------------------

==============================================================================
C++    | 508.namd_r(base pass 0)
------------------------------------------------------------------------------
Using built-in specs.
COLLECT_GCC=/opt/native-gcc/bin/internal-x86_64-linux-musl-g++
COLLECT_LTO_WRAPPER=/opt/native-gcc/bin/../libexec/gcc/x86_64-linux-musl/13.2.0/lto-wrapper
Target: x86_64-linux-musl
Configured with: ../gcc/configure --target=x86_64-linux-musl --disable-docs
  --disable-bootstrap --disable-libssp --disable-multilib --disable-shared
  --enable-languages=c,c++ --enable-lto
  --prefix=/home/zyedidia/programming/lfi/toolchain/lfi-gcc/native-gcc
  --with-pkgversion=LFI
Thread model: posix
Supported LTO compression algorithms: zlib zstd
gcc version 13.2.0 (LFI)
specmake[1]: Leaving directory
  '/mnt/seconddrive/Code/seguecg-root/segue-lfi/spec2017/benchspec/CPU/508.namd_r/build/build_base_gcc-m64.0000'
------------------------------------------------------------------------------

==============================================================================
C++    | 510.parest_r(base pass 0)
------------------------------------------------------------------------------
Using built-in specs.
COLLECT_GCC=/opt/native-gcc/bin/internal-x86_64-linux-musl-g++
COLLECT_LTO_WRAPPER=/opt/native-gcc/bin/../libexec/gcc/x86_64-linux-musl/13.2.0/lto-wrapper
Target: x86_64-linux-musl
Configured with: ../gcc/configure --target=x86_64-linux-musl --disable-docs
  --disable-bootstrap --disable-libssp --disable-multilib --disable-shared
  --enable-languages=c,c++ --enable-lto
  --prefix=/home/zyedidia/programming/lfi/toolchain/lfi-gcc/native-gcc
  --with-pkgversion=LFI
Thread model: posix
Supported LTO compression algorithms: zlib zstd
gcc version 13.2.0 (LFI)
specmake[1]: Leaving directory
  '/mnt/seconddrive/Code/seguecg-root/segue-lfi/spec2017/benchspec/CPU/510.parest_r/build/build_base_gcc-m64.0000'
------------------------------------------------------------------------------

==============================================================================
C++    | 508.namd_r(base pass )
------------------------------------------------------------------------------
specmake[1]: Entering directory
  '/mnt/seconddrive/Code/seguecg-root/segue-lfi/spec2017/benchspec/CPU/508.namd_r/build/build_base_gcc-m64.0000'
------------------------------------------------------------------------------
```

(Continued on next page)

Untitled

Compiler Version Notes (Continued)

```
==============================================================================
C++    | 510.parest_r(base pass )
------------------------------------------------------------------------------
specmake[1]: Entering directory
  '/mnt/seconddrive/Code/seguecg-root/segue-lfi/spec2017/benchspec/CPU/510.parest_r/build/build_base_gcc-m64.0000'
------------------------------------------------------------------------------

==============================================================================
C++    | 511.povray_r(base)
------------------------------------------------------------------------------
specmake[1]: Entering directory
  '/mnt/seconddrive/Code/seguecg-root/segue-lfi/spec2017/benchspec/CPU/511.povray_r/build/build_base_gcc-m64.0000'
------------------------------------------------------------------------------

==============================================================================
C++    | 508.namd_r(base pass 0)
------------------------------------------------------------------------------
Using built-in specs.
COLLECT_GCC=/opt/native-gcc/bin/internal-x86_64-linux-musl-g++
COLLECT_LTO_WRAPPER=/opt/native-gcc/bin/../libexec/gcc/x86_64-linux-musl/13.2.0/lto-wrapper
Target: x86_64-linux-musl
Configured with: ../gcc/configure --target=x86_64-linux-musl --disable-docs
  --disable-bootstrap --disable-libssp --disable-multilib --disable-shared
  --enable-languages=c,c++ --enable-lto
  --prefix=/home/zyedidia/programming/lfi/toolchain/lfi-gcc/native-gcc
  --with-pkgversion=LFI
Thread model: posix
Supported LTO compression algorithms: zlib zstd
gcc version 13.2.0 (LFI)
specmake[1]: Leaving directory
  '/mnt/seconddrive/Code/seguecg-root/segue-lfi/spec2017/benchspec/CPU/508.namd_r/build/build_base_gcc-m64.0000'
------------------------------------------------------------------------------

==============================================================================
C++    | 510.parest_r(base pass 0)
------------------------------------------------------------------------------
Using built-in specs.
COLLECT_GCC=/opt/native-gcc/bin/internal-x86_64-linux-musl-g++
COLLECT_LTO_WRAPPER=/opt/native-gcc/bin/../libexec/gcc/x86_64-linux-musl/13.2.0/lto-wrapper
Target: x86_64-linux-musl
Configured with: ../gcc/configure --target=x86_64-linux-musl --disable-docs
  --disable-bootstrap --disable-libssp --disable-multilib --disable-shared
  --enable-languages=c,c++ --enable-lto
  --prefix=/home/zyedidia/programming/lfi/toolchain/lfi-gcc/native-gcc
  --with-pkgversion=LFI
Thread model: posix
```

(Continued on next page)

Invalid Run

Compiler Version Notes (Continued)

```
Supported LTO compression algorithms: zlib zstd
gcc version 13.2.0 (LFI)
specmake[1]: Leaving directory
  '/mnt/seconddrive/Code/seguecg-root/segue-lfi/spec2017/benchspec/CPU/510.parest_r/build/build_base_gcc-m64.0000'
------------------------------------------------------------------------------

==============================================================================
C++    | 508.namd_r(base pass )
------------------------------------------------------------------------------
specmake[1]: Entering directory
  '/mnt/seconddrive/Code/seguecg-root/segue-lfi/spec2017/benchspec/CPU/508.namd_r/build/build_base_gcc-m64.0000'
------------------------------------------------------------------------------

==============================================================================
C++    | 510.parest_r(base pass )
------------------------------------------------------------------------------
specmake[1]: Entering directory
  '/mnt/seconddrive/Code/seguecg-root/segue-lfi/spec2017/benchspec/CPU/510.parest_r/build/build_base_gcc-m64.0000'
------------------------------------------------------------------------------

==============================================================================
C++    | 511.povray_r(base)
------------------------------------------------------------------------------
specmake[1]: Entering directory
  '/mnt/seconddrive/Code/seguecg-root/segue-lfi/spec2017/benchspec/CPU/511.povray_r/build/build_base_gcc-m64.0000'
------------------------------------------------------------------------------

==============================================================================
C++    | 508.namd_r(base pass 0)
------------------------------------------------------------------------------
Using built-in specs.
COLLECT_GCC=/opt/native-gcc/bin/internal-x86_64-linux-musl-g++
COLLECT_LTO_WRAPPER=/opt/native-gcc/bin/../libexec/gcc/x86_64-linux-musl/13.2.0/lto-wrapper
Target: x86_64-linux-musl
Configured with: ../gcc/configure --target=x86_64-linux-musl --disable-docs
  --disable-bootstrap --disable-libssp --disable-multilib --disable-shared
  --enable-languages=c,c++ --enable-lto
  --prefix=/home/zyedidia/programming/lfi/toolchain/lfi-gcc/native-gcc
  --with-pkgversion=LFI
Thread model: posix
Supported LTO compression algorithms: zlib zstd
gcc version 13.2.0 (LFI)
specmake[1]: Leaving directory
  '/mnt/seconddrive/Code/seguecg-root/segue-lfi/spec2017/benchspec/CPU/508.namd_r/build/build_base_gcc-m64.0000'
------------------------------------------------------------------------------

==============================================================================
```

(Continued on next page)

Invalid Run

Compiler Version Notes (Continued)

```
C++    | 510.parest_r(base pass 0)
------------------------------------------------------------------------------
Using built-in specs.
COLLECT_GCC=/opt/native-gcc/bin/internal-x86_64-linux-musl-g++
COLLECT_LTO_WRAPPER=/opt/native-gcc/bin/../libexec/gcc/x86_64-linux-musl/13.2.0/lto-wrapper
Target: x86_64-linux-musl
Configured with: ../gcc/configure --target=x86_64-linux-musl --disable-docs
  --disable-bootstrap --disable-libssp --disable-multilib --disable-shared
  --enable-languages=c,c++ --enable-lto
  --prefix=/home/zyedidia/programming/lfi/toolchain/lfi-gcc/native-gcc
  --with-pkgversion=LFI
Thread model: posix
Supported LTO compression algorithms: zlib zstd
gcc version 13.2.0 (LFI)
specmake[1]: Leaving directory
  '/mnt/seconddrive/Code/seguecg-root/segue-lfi/spec2017/benchspec/CPU/510.parest_r/build/build_base_gcc-m64.0000'
------------------------------------------------------------------------------

==============================================================================
C++    | 508.namd_r(base pass )
------------------------------------------------------------------------------
specmake[1]: Entering directory
  '/mnt/seconddrive/Code/seguecg-root/segue-lfi/spec2017/benchspec/CPU/508.namd_r/build/build_base_gcc-m64.0000'
------------------------------------------------------------------------------

==============================================================================
C++    | 510.parest_r(base pass )
------------------------------------------------------------------------------
specmake[1]: Entering directory
  '/mnt/seconddrive/Code/seguecg-root/segue-lfi/spec2017/benchspec/CPU/510.parest_r/build/build_base_gcc-m64.0000'
------------------------------------------------------------------------------

==============================================================================
C++    | 511.povray_r(base)
------------------------------------------------------------------------------
specmake[1]: Entering directory
  '/mnt/seconddrive/Code/seguecg-root/segue-lfi/spec2017/benchspec/CPU/511.povray_r/build/build_base_gcc-m64.0000'
------------------------------------------------------------------------------

==============================================================================
C++    | 508.namd_r(base pass 0)
------------------------------------------------------------------------------
Using built-in specs.
COLLECT_GCC=/opt/native-gcc/bin/internal-x86_64-linux-musl-g++
COLLECT_LTO_WRAPPER=/opt/native-gcc/bin/../libexec/gcc/x86_64-linux-musl/13.2.0/lto-wrapper
Target: x86_64-linux-musl
Configured with: ../gcc/configure --target=x86_64-linux-musl --disable-docs
```

(Continued on next page)

Invalid Run

Compiler Version Notes (Continued)

```
  --disable-bootstrap --disable-libssp --disable-multilib --disable-shared
  --enable-languages=c,c++ --enable-lto
  --prefix=/home/zyedidia/programming/lfi/toolchain/lfi-gcc/native-gcc
  --with-pkgversion=LFI
Thread model: posix
Supported LTO compression algorithms: zlib zstd
gcc version 13.2.0 (LFI)
specmake[1]: Leaving directory
  '/mnt/seconddrive/Code/seguecg-root/segue-lfi/spec2017/benchspec/CPU/508.namd_r/build/build_base_gcc-m64.0000'
------------------------------------------------------------------------------

==============================================================================
C++    | 510.parest_r(base pass 0)
------------------------------------------------------------------------------
Using built-in specs.
COLLECT_GCC=/opt/native-gcc/bin/internal-x86_64-linux-musl-g++
COLLECT_LTO_WRAPPER=/opt/native-gcc/bin/../libexec/gcc/x86_64-linux-musl/13.2.0/lto-wrapper
Target: x86_64-linux-musl
Configured with: ../gcc/configure --target=x86_64-linux-musl --disable-docs
  --disable-bootstrap --disable-libssp --disable-multilib --disable-shared
  --enable-languages=c,c++ --enable-lto
  --prefix=/home/zyedidia/programming/lfi/toolchain/lfi-gcc/native-gcc
  --with-pkgversion=LFI
Thread model: posix
Supported LTO compression algorithms: zlib zstd
gcc version 13.2.0 (LFI)
specmake[1]: Leaving directory
  '/mnt/seconddrive/Code/seguecg-root/segue-lfi/spec2017/benchspec/CPU/510.parest_r/build/build_base_gcc-m64.0000'
------------------------------------------------------------------------------

==============================================================================
C++    | 508.namd_r(base pass )
------------------------------------------------------------------------------
specmake[1]: Entering directory
  '/mnt/seconddrive/Code/seguecg-root/segue-lfi/spec2017/benchspec/CPU/508.namd_r/build/build_base_gcc-m64.0000'
------------------------------------------------------------------------------

==============================================================================
C++    | 510.parest_r(base pass )
------------------------------------------------------------------------------
specmake[1]: Entering directory
  '/mnt/seconddrive/Code/seguecg-root/segue-lfi/spec2017/benchspec/CPU/510.parest_r/build/build_base_gcc-m64.0000'
------------------------------------------------------------------------------

==============================================================================
C++    | 511.povray_r(base)
------------------------------------------------------------------------------
```


(Continued on next page)

In Draft

Compiler Version Notes (Continued)

```
specmake[1]: Entering directory
  '/mnt/seconddrive/Code/seguecg-root/segue-lfi/spec2017/benchspec/CPU/511.povray_r/build/build_base_gcc-m64.0000'
------------------------------------------------------------------------------

==============================================================================
C++    | 508.namd_r(base pass 0)
------------------------------------------------------------------------------
Using built-in specs.
COLLECT_GCC=/opt/native-gcc/bin/internal-x86_64-linux-musl-g++
COLLECT_LTO_WRAPPER=/opt/native-gcc/bin/../libexec/gcc/x86_64-linux-musl/13.2.0/lto-wrapper
Target: x86_64-linux-musl
Configured with: ../gcc/configure --target=x86_64-linux-musl --disable-docs
  --disable-bootstrap --disable-libssp --disable-multilib --disable-shared
  --enable-languages=c,c++ --enable-lto
  --prefix=/home/zyedidia/programming/lfi/toolchain/lfi-gcc/native-gcc
  --with-pkgversion=LFI
Thread model: posix
Supported LTO compression algorithms: zlib zstd
gcc version 13.2.0 (LFI)
specmake[1]: Leaving directory
  '/mnt/seconddrive/Code/seguecg-root/segue-lfi/spec2017/benchspec/CPU/508.namd_r/build/build_base_gcc-m64.0000'
------------------------------------------------------------------------------

==============================================================================
C++    | 510.parest_r(base pass 0)
------------------------------------------------------------------------------
Using built-in specs.
COLLECT_GCC=/opt/native-gcc/bin/internal-x86_64-linux-musl-g++
COLLECT_LTO_WRAPPER=/opt/native-gcc/bin/../libexec/gcc/x86_64-linux-musl/13.2.0/lto-wrapper
Target: x86_64-linux-musl
Configured with: ../gcc/configure --target=x86_64-linux-musl --disable-docs
  --disable-bootstrap --disable-libssp --disable-multilib --disable-shared
  --enable-languages=c,c++ --enable-lto
  --prefix=/home/zyedidia/programming/lfi/toolchain/lfi-gcc/native-gcc
  --with-pkgversion=LFI
Thread model: posix
Supported LTO compression algorithms: zlib zstd
gcc version 13.2.0 (LFI)
specmake[1]: Leaving directory
  '/mnt/seconddrive/Code/seguecg-root/segue-lfi/spec2017/benchspec/CPU/510.parest_r/build/build_base_gcc-m64.0000'
------------------------------------------------------------------------------

==============================================================================
C++    | 508.namd_r(base pass )
------------------------------------------------------------------------------
specmake[1]: Entering directory
  '/mnt/seconddrive/Code/seguecg-root/segue-lfi/spec2017/benchspec/CPU/508.namd_r/build/build_base_gcc-m64.0000'
```

(Continued on next page)

Invalid Report

Compiler Version Notes (Continued)

```
------------------------------------------------------------------------------

==============================================================================
C++    | 510.parest_r(base pass )
------------------------------------------------------------------------------
specmake[1]: Entering directory
  '/mnt/seconddrive/Code/seguecg-root/segue-lfi/spec2017/benchspec/CPU/510.parest_r/build/build_base_gcc-m64.0000'
------------------------------------------------------------------------------

==============================================================================
C++    | 511.povray_r(base)
------------------------------------------------------------------------------
specmake[1]: Entering directory
  '/mnt/seconddrive/Code/seguecg-root/segue-lfi/spec2017/benchspec/CPU/511.povray_r/build/build_base_gcc-m64.0000'
------------------------------------------------------------------------------

==============================================================================
C++, C | 511.povray_r(base)
------------------------------------------------------------------------------
Using built-in specs.
COLLECT_GCC=/opt/native-gcc/bin/internal-x86_64-linux-musl-g++
COLLECT_LTO_WRAPPER=/opt/native-gcc/bin/../libexec/gcc/x86_64-linux-musl/13.2.0/lto-wrapper
Target: x86_64-linux-musl
Configured with: ../gcc/configure --target=x86_64-linux-musl --disable-docs
  --disable-bootstrap --disable-libssp --disable-multilib --disable-shared
  --enable-languages=c,c++ --enable-lto
  --prefix=/home/zyedidia/programming/lfi/toolchain/lfi-gcc/native-gcc
  --with-pkgversion=LFI
Thread model: posix
Supported LTO compression algorithms: zlib zstd
gcc version 13.2.0 (LFI)
Using built-in specs.
COLLECT_GCC=/opt/native-gcc/bin/internal-x86_64-linux-musl-gcc
COLLECT_LTO_WRAPPER=/opt/native-gcc/bin/../libexec/gcc/x86_64-linux-musl/13.2.0/lto-wrapper
Target: x86_64-linux-musl
Configured with: ../gcc/configure --target=x86_64-linux-musl --disable-docs
  --disable-bootstrap --disable-libssp --disable-multilib --disable-shared
  --enable-languages=c,c++ --enable-lto
  --prefix=/home/zyedidia/programming/lfi/toolchain/lfi-gcc/native-gcc
  --with-pkgversion=LFI
Thread model: posix
Supported LTO compression algorithms: zlib zstd
gcc version 13.2.0 (LFI)
specmake[1]: Leaving directory
  '/mnt/seconddrive/Code/seguecg-root/segue-lfi/spec2017/benchspec/CPU/511.povray_r/build/build_base_gcc-m64.0000'
------------------------------------------------------------------------------
```

Tentative

Copyright 2017-2024 Standard Performance Evaluation Corporation

Base Unknown Flags

508.namd_r: "/opt/native-gcc/bin/x86_64-linux-musl-" (in CXX)
"/opt/native-gcc/bin/x86_64-linux-musl-" (in LD)
"-fomit-frame-pointer" (in OPTIMIZE)

510.parest_r: "/opt/native-gcc/bin/x86_64-linux-musl-" (in CXX)
"/opt/native-gcc/bin/x86_64-linux-musl-" (in LD)
"-fomit-frame-pointer" (in OPTIMIZE)

511.povray_r: "/opt/native-gcc/bin/x86_64-linux-musl-" (in CXX)
"/opt/native-gcc/bin/x86_64-linux-musl-" (in CC)
"/opt/native-gcc/bin/x86_64-linux-musl-" (in LD)
"-fomit-frame-pointer" (in OPTIMIZE)

519.lbm_r: "/opt/native-gcc/bin/x86_64-linux-musl-" (in CC)
"/opt/native-gcc/bin/x86_64-linux-musl-" (in LD)
"-fomit-frame-pointer" (in OPTIMIZE)

538.imagick_r: "/opt/native-gcc/bin/x86_64-linux-musl-" (in CC)
"/opt/native-gcc/bin/x86_64-linux-musl-" (in LD)
"-fomit-frame-pointer" (in OPTIMIZE)

544.nab_r: "/opt/native-gcc/bin/x86_64-linux-musl-" (in CC)
"/opt/native-gcc/bin/x86_64-linux-musl-" (in LD)
"-fomit-frame-pointer" (in OPTIMIZE)

Base Runtime Environment

Benchmarks using both C and C++:

511.povray_r: No flags used

Base Compiler Invocation

C benchmarks:
gcc

C++ benchmarks:
g++

Benchmarks using both C and C++:

(Continued on next page)

Invalid RUN

Copyright 2017-2024 Standard Performance Evaluation Corporation

Base Compiler Invocation (Continued)

511.povray_r: `g++ gcc`

Base Portability Flags

508.namd_r: `-DSPEC_LP64`
510.parest_r: `-DSPEC_LP64`
511.povray_r: `-DSPEC_LP64`
519.lbm_r: `-DSPEC_LP64`
538.imagick_r: `-DSPEC_LP64`
544.nab_r: `-DSPEC_LP64`

Base Optimization Flags

C benchmarks:
`-std=c99 -O3 -flto`

C++ benchmarks:
`-std=c++03 -O3 -flto`

Benchmarks using both C and C++:

511.povray_r: `-std=c++03 -std=c99 -O3 -flto`

Base Other Flags

Benchmarks using both C and C++:

511.povray_r: `No flags used`

Invalid

SPEC CPU and SPECrate are registered trademarks of the Standard Performance Evaluation Corporation. All other brand and product names appearing in this result are trademarks or registered trademarks of their respective holders.

For questions about this result, please contact the tester. For other inquiries, please contact info@spec.org.

Tested with SPEC CPU®2017 v0.0.0 on 2024-06-23 12:02:51-0500.
Report generated on 2024-06-23 12:48:52 by CPU2017 PDF formatter v6255.