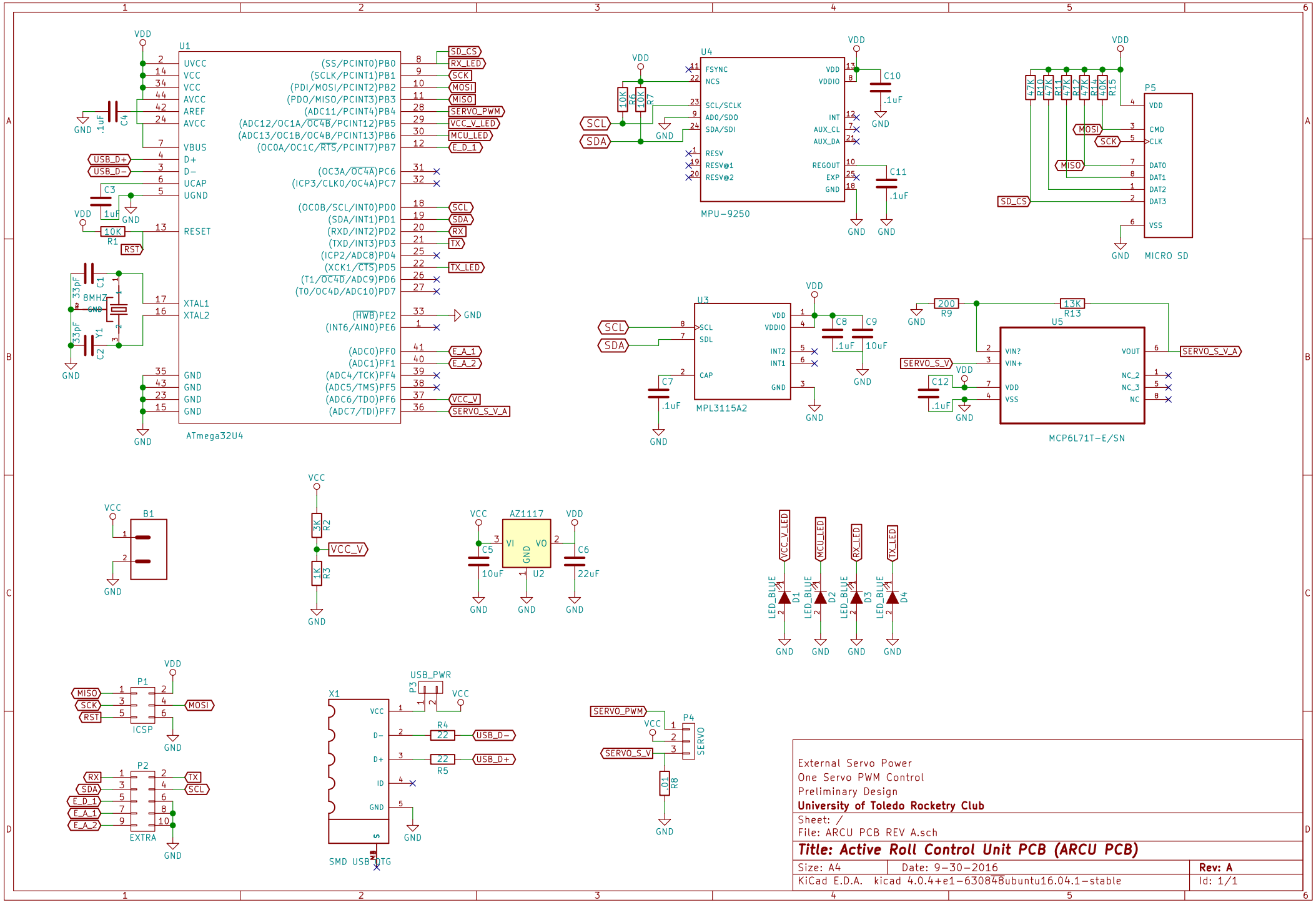

External Servo Power
One Servo PWM Control
Preliminary Design
University of Toledo Rocketry Club

Sheet: /
File: ARCU PCB REV A.sch

Title: Active Roll Control Unit PCB (ARCU PCB)

Size: A4	Date: 9−30−2016	**Rev: A**
KiCad E.D.A. kicad 4.0.4+e1−630848ubuntu16.04.1−stable		Id: 1/1