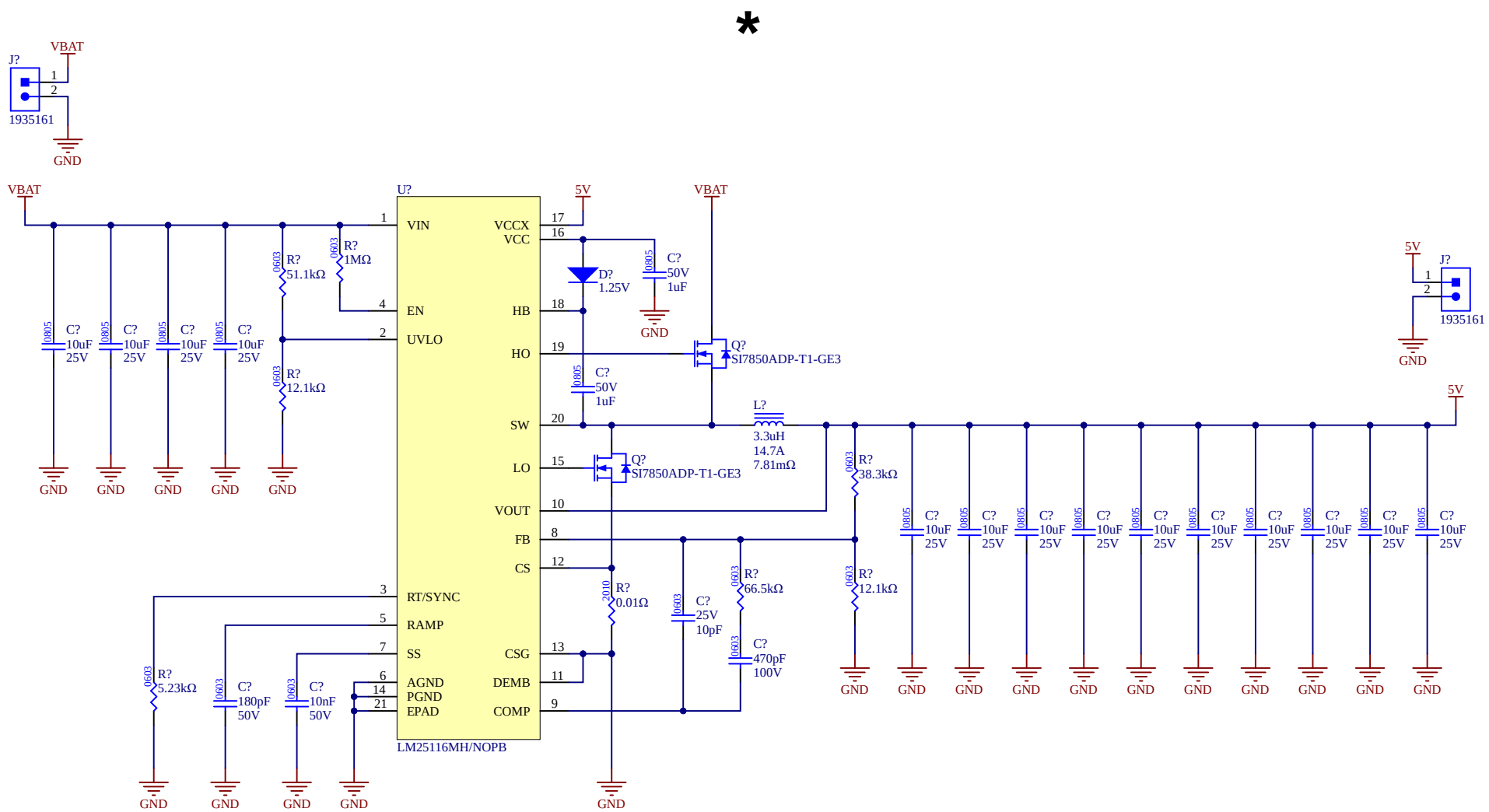

WARG

Waterloo Aerial Robotics Group
200 University Ave W
Waterloo, Ontario, Canada
N2L 3G1

PROJECT: Power Distribution.PrjPcb, [No Variations]	REVISION: *
DOCUMENT: Power Distribution.SchDoc	MODIFIED: 2021-11-18
ENGINEER: * / REVIEWER: *	SHEET 1 OF 1