*

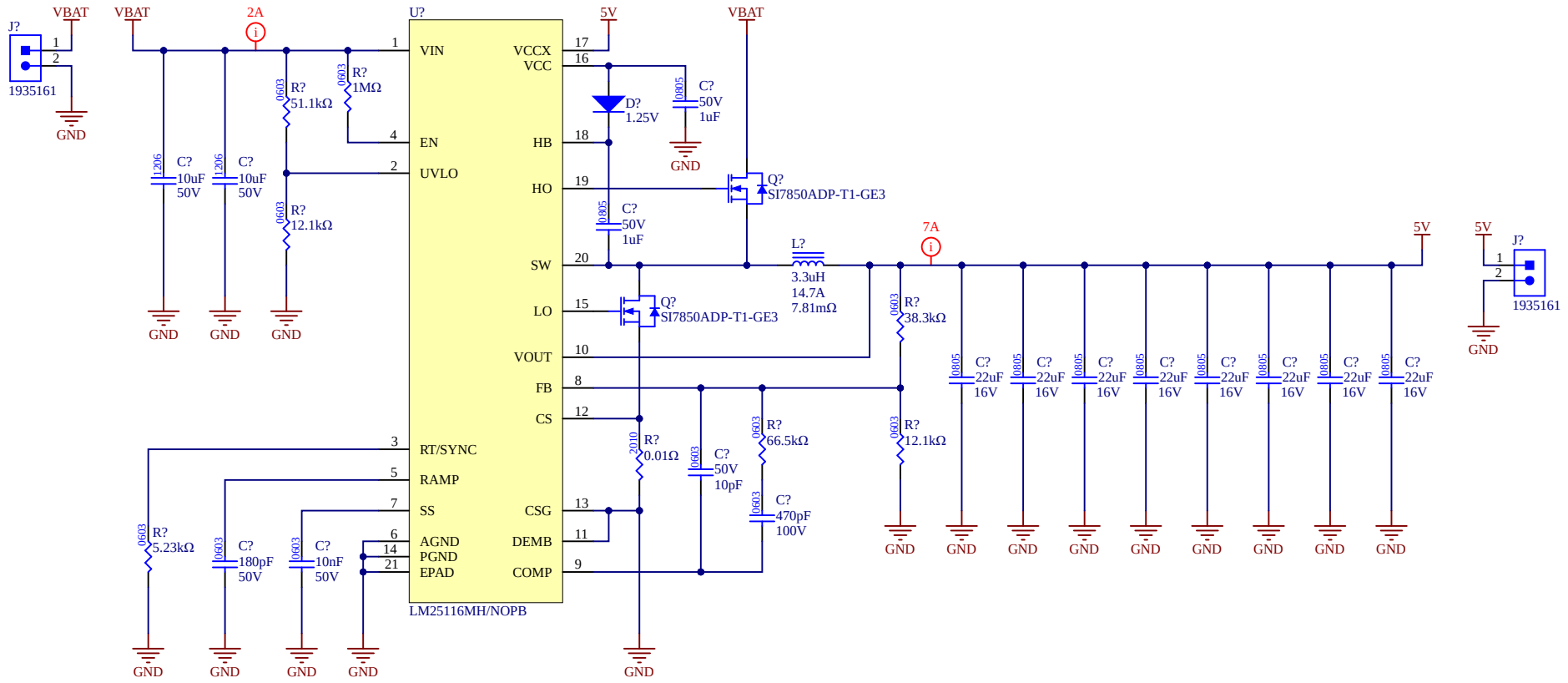

WARG	Waterloo Aerial Robotics Group 200 University Ave W Waterloo, Ontario, Canada N2L 3G1
PROJECT: Power Distribution.PrjPcb, [No Variations]	REVISION: *
DOCUMENT: Power Distribution.SchDoc	MODIFIED: 2021-11-18
ENGINEER: * / REVIEWER: *	SHEET 1 OF 1