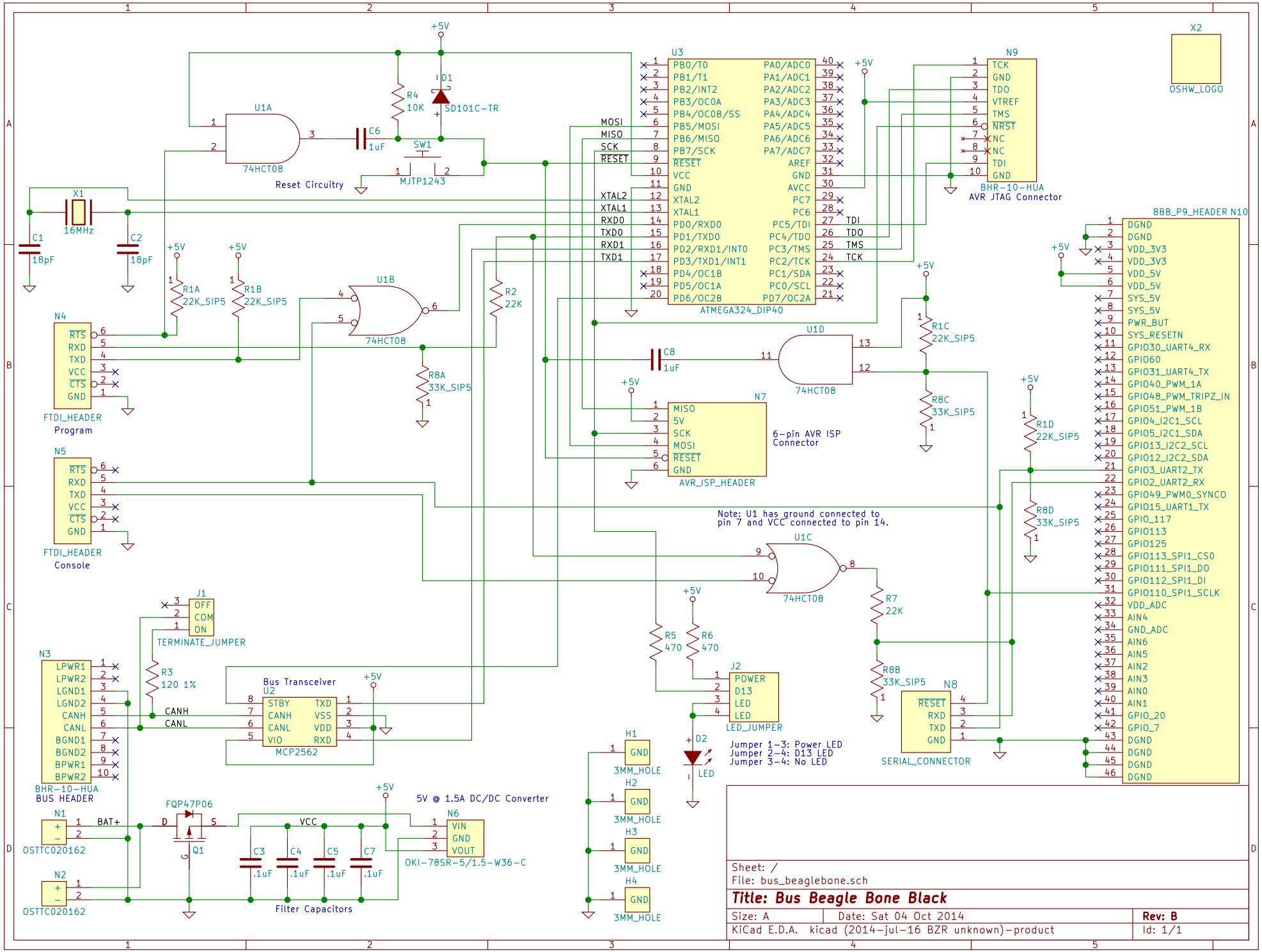
U3
ATMEGA324_DIP40
PB0/T0
PB1/T1
PB2/INT2
PB3/OC0A
PB4/OC0B/SS
PB5/MOSI
PB6/MISO
PB7/SCK
RESET
VCC
GND
XTAL2
XTAL1
PD0/RXD0
PD1/TXD0
PD2/RXD1/INT0
PD3/TXD1/INT1
PD4/OC1B
PD5/OC1A
PD6/OC2B
PA0/ADC0
PA1/ADC1
PA2/ADC2
PA3/ADC3
PA4/ADC4
PA5/ADC5
PA6/ADC6
PA7/ADC7
AREF
GND
AVCC
PC7
PC6
PC5/TDI
PC4/TDO
PC3/TMS
PC2/TCK
PC1/SDA
PC0/SCL
PD7/OC2A
MOSI
MISO
SCK
RESET
XTAL2
XTAL1
RXD0
TXD0
RXD1
TXD1
TDI
TDO
TMS
TCK
N9
TCK
GND
TDO
VTREF
TMS
NRST
NC
NC
TDI
GND
BHR-10-HUA
AVR JTAG Connector
X2
OSHW_LOGO
U1A
74HCT08
Reset Circuitry
R4
10K
D1
SD101C-TR
C6
1uF
SW1
MJTP1243
X1
16MHz
C1
18pF
C2
18pF
R1A
22K_SIP5
R1B
22K_SIP5
U1B
74HCT08
R2
22K
R8A
33K_SIP5
N4
RTS
RXD
TXD
VCC
CTS
GND
FTDI_HEADER
Program
N5
RTS
RXD
TXD
VCC
CTS
GND
FTDI_HEADER
Console
C8
1uF
U1D
74HCT08
R1C
22K_SIP5
R8C
33K_SIP5
N7
MISO
5V
SCK
MOSI
RESET
GND
AVR_ISP_HEADER
6-pin AVR ISP
Connector
Note: U1 has ground connected to
pin 7 and VCC connected to pin 14.
U1C
74HCT08
R7
22K
R8B
33K_SIP5
R1D
22K_SIP5
R8D
33K_SIP5
BBB_P9_HEADER N10
DGND
DGND
VDD_3V3
VDD_3V3
VDD_5V
VDD_5V
SYS_5V
SYS_5V
PWR_BUT
SYS_RESETN
GPIO30_UART4_RX
GPIO60
GPIO31_UART4_TX
GPIO40_PWM_1A
GPIO48_PWM_TRIPZ_IN
GPIO51_PWM_1B
GPIO4_I2C1_SCL
GPIO5_I2C1_SDA
GPIO13_I2C2_SCL
GPIO12_I2C2_SDA
GPIO3_UART2_TX
GPIO2_UART2_RX
GPIO49_PWM0_SYNCO
GPIO15_UART1_TX
GPIO_117
GPIO113
GPIO125
GPIO113_SPI1_CS0
GPIO111_SPI1_DO
GPIO112_SPI1_DI
GPIO110_SPI1_SCLK
VDD_ADC
AIN4
GND_ADC
AIN6
AIN5
AIN2
AIN3
AIN0
AIN1
GPIO_20
GPIO_7
DGND
DGND
DGND
DGND
J1
OFF
COM
ON
TERMINATE_JUMPER
R3
120 1%
N3
LPWR1
LPWR2
LGND1
LGND2
CANH
CANL
BGND1
BGND2
BPWR1
BPWR2
BHR-10-HUA
BUS HEADER
Bus Transceiver
U2
STBY
CANH
CANL
VIO
TXD
VSS
VDD
RXD
MCP2562
CANH
CANL
R5
470
R6
470
J2
POWER
D13
LED
LED
LED_JUMPER
D2
LED
Jumper 1-3: Power LED
Jumper 2-4: D13 LED
Jumper 3-4: No LED
N8
RESET
RXD
TXD
GND
SERIAL_CONNECTOR
H1
GND
3MM_HOLE
H2
GND
3MM_HOLE
H3
GND
3MM_HOLE
H4
GND
3MM_HOLE
N1
OSTTC020162
N2
OSTTC020162
BAT+
FQP47P06
Q1
VCC
C3
.1uF
C4
.1uF
C5
.1uF
C7
.1uF
Filter Capacitors
5V @ 1.5A DC/DC Converter
N6
VIN
GND
VOUT
OKI-78SR-5/1.5-W36-C
Sheet: /
File: bus_beaglebone.sch
Title: Bus Beagle Bone Black
Size: A
Date: Sat 04 Oct 2014
Rev: B
KiCad E.D.A. kicad (2014-jul-16 BZR unknown)-product
Id: 1/1