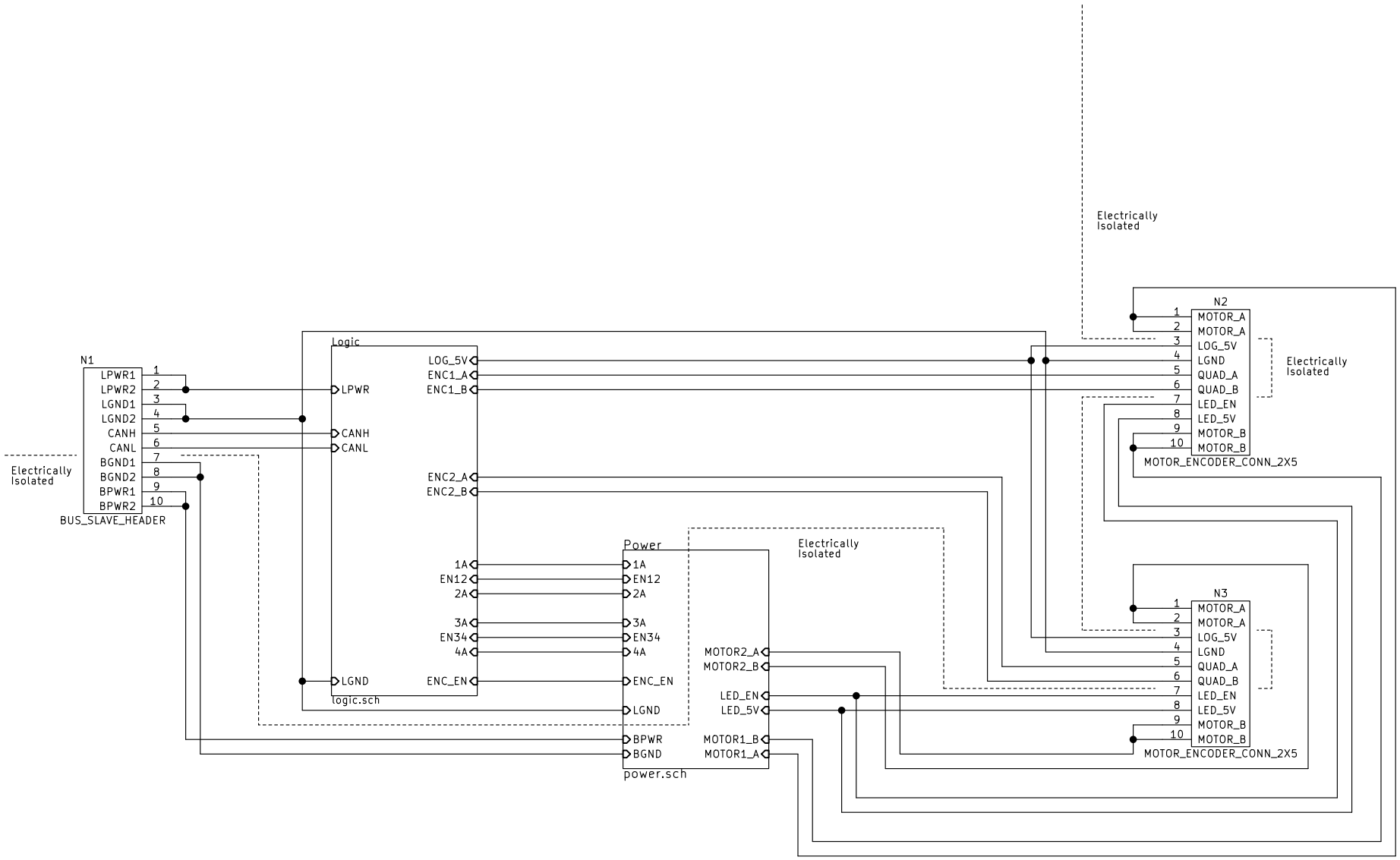

Sheet: /
File: bus_bridge_encoders_sonar.sch

Title: Bus Bridge/Encoders/Sonars

Size: A	Date: Thu 30 Oct 2014	**Rev: D**
KiCad E.D.A. kicad (2014-jul-16 BZR unknown)-product		Id: 1/3

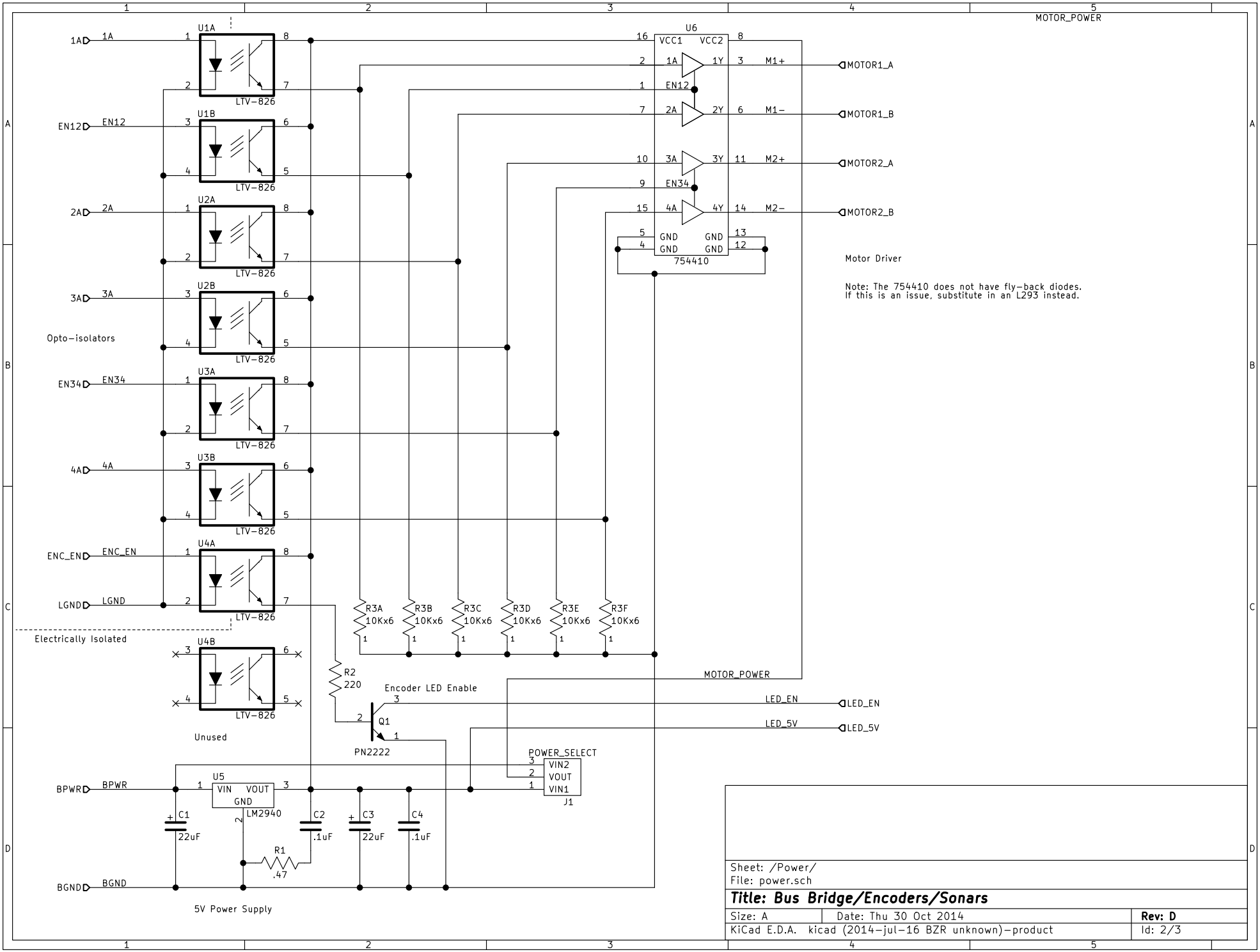

Sheet: /Power/
File: power.sch

Title: Bus Bridge/Encoders/Sonars

Size: A	Date: Thu 30 Oct 2014	**Rev: D**
KiCad E.D.A. kicad (2014-jul-16 BZR unknown)-product		Id: 2/3

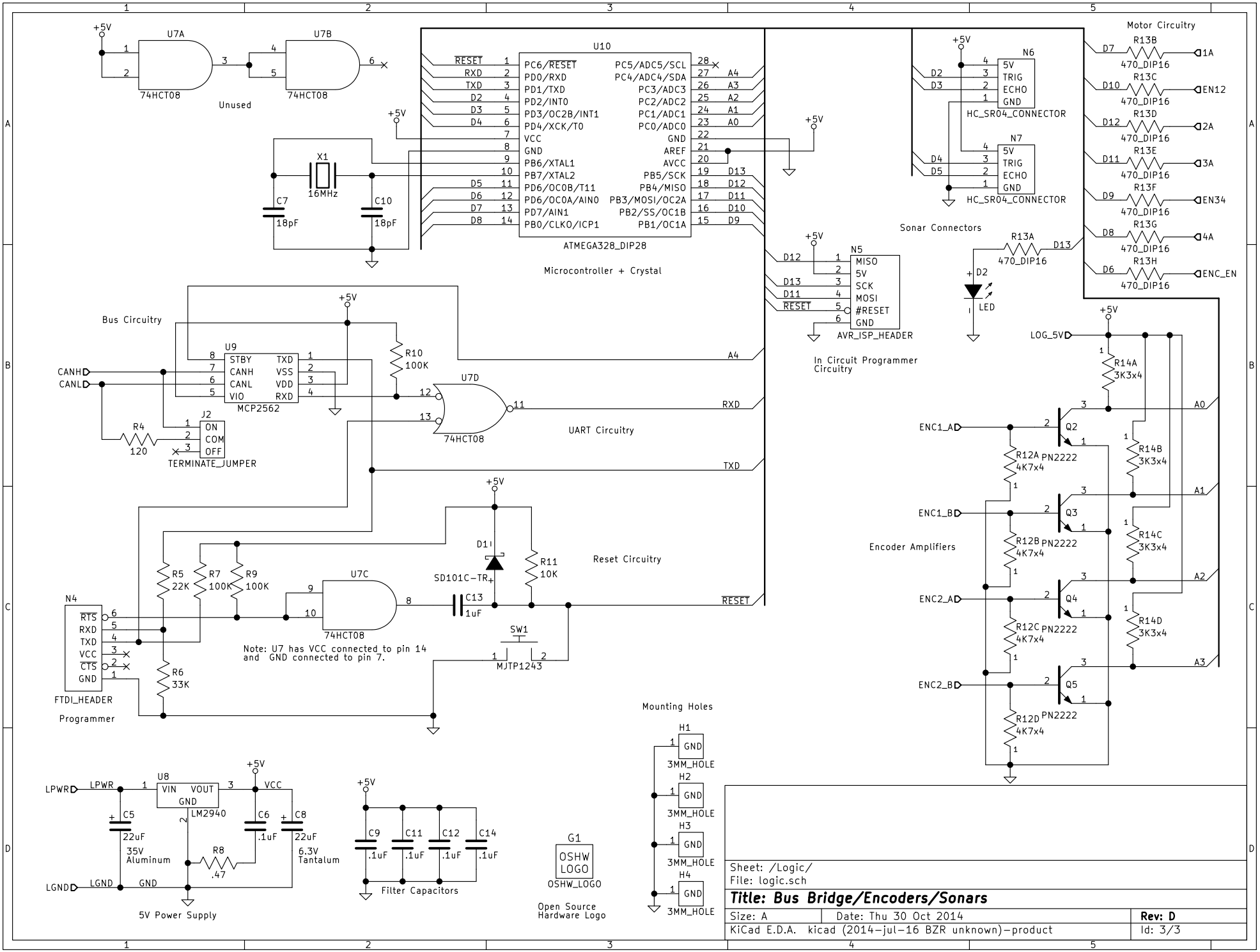
U7A
74HCT08
U7B
74HCT08
Unused
U10
ATMEGA328_DIP28
Microcontroller + Crystal
X1
16MHz
C7
18pF
C10
18pF
Sonar Connectors
N6
HC_SR04_CONNECTOR
N7
HC_SR04_CONNECTOR
Motor Circuitry
R13B 470_DIP16
R13C 470_DIP16
R13D 470_DIP16
R13E 470_DIP16
R13F 470_DIP16
R13G 470_DIP16
R13H 470_DIP16
R13A 470_DIP16
D2
LED
N5
AVR_ISP_HEADER
In Circuit Programmer Circuitry
Bus Circuitry
U9
MCP2562
CANH
CANL
R10 100K
U7D
74HCT08
UART Circuitry
R4 120
J2
TERMINATE_JUMPER
R5 22K
R7 100K
R9 100K
R6 33K
U7C
74HCT08
Note: U7 has VCC connected to pin 14 and GND connected to pin 7.
D1
SD101C-TR
R11 10K
C13 1uF
Reset Circuitry
SW1
MJTP1243
N4
FTDI_HEADER
Programmer
LOG_5V
R14A 3K3x4
R14B 3K3x4
R14C 3K3x4
R14D 3K3x4
ENC1_A
ENC1_B
ENC2_A
ENC2_B
Q2 PN2222
Q3 PN2222
Q4 PN2222
Q5 PN2222
R12A 4K7x4
R12B 4K7x4
R12C 4K7x4
R12D 4K7x4
Encoder Amplifiers
Mounting Holes
H1 3MM_HOLE
H2 3MM_HOLE
H3 3MM_HOLE
H4 3MM_HOLE
LPWR
U8
LM2940
VIN VOUT GND
C5 22uF 35V Aluminum
C6 .1uF
C8 22uF 6.3V Tantalum
R8 .47
LGND
5V Power Supply
C9 .1uF
C11 .1uF
C12 .1uF
C14 .1uF
Filter Capacitors
G1
OSHW LOGO
OSHW_LOGO
Open Source Hardware Logo
Sheet: /Logic/
File: logic.sch
Title: Bus Bridge/Encoders/Sonars
Size: A
Date: Thu 30 Oct 2014
Rev: D
KiCad E.D.A. kicad (2014-jul-16 BZR unknown)-product
Id: 3/3