Group Three(3)

Group Members

1.Agyei Jedidiah Afia Fosuah - 7341623

2.Augustine Arhinful – 7342423

3.Martin Ennin – 7343123

4.Atta-Kumah Joshua Kusi – 7343423

5.Amankwah Gordon – 7342023

6.Yakubu Kabir - 1874822

Table of Content

- Problem Statement
- How The System Works
- Circuit Wiring Overview
- Arduino code
- Wokwi simulation
- Conclusion

Problem Statement

- **Background**

Weather conditions change frequently.
Accurate data is not available locally.
Many areas rely on generalised forecasts.

- **Impact**

Farmers make poor decisions. People are unprepared for weather changes.
Inefficient planning(agriculture, daily activities, etc.)

- **Need for IOT and Automation**

There is a need for an intelligent weather station that not only monitors environmental parameters but also predict future weather conditions such as rainfall.

- **Our Solution**

A smart weather station using Arduino and sensors to monitor and predict weather conditions in real time

System Components

- **Arduino Uno**

Microcontroller / Brain

Processes sensor data and sends it to the server.

- **BMP 180 Sensor**

Detection Unit

Detects presence of **Atmospheric pressure**

- **Power Supply**

Energy Source

Provides power to the system

- **DHT 11 Sensor**

Temperature & Humidity

Measures **atmospheric temperature** and **humidity**.

- **LCD Display**

Output Unit

Displays real-time weather data

How The System works

1 Sensor collects Data	2 Data Sent to Arduino Uno	3 Processing	4 Display Output		
Temperature, Humidity, and Atmospheric pressure data are captured	Sensors send signals to the microcontroller	Arduino Uno processes and formats the data	Data is shown on LCD		

Circuit Wiring Overview

Component	Pin	Connected to Arduino	Mode
DHT22	VCC	5V	Power
DHT22	GND	GND	Ground
DHT22	DATA	D2	Input
BMP180	VCC	5V	Power
BMP180	GND	GND	Ground
BMP180	SCL	A5	I²C Clock
BMP180	SDA	A4	I²C Data
LCD (parallel)	RS	D13	Output
LCD	E	D12	Output
LCD	D4	D11	Output
LCD	D5	D10	Output
LCD	D6	D9	Output
LCD	D7	D8	Output
LCD	RW	GND	Ground
LCD	A	5V	Power

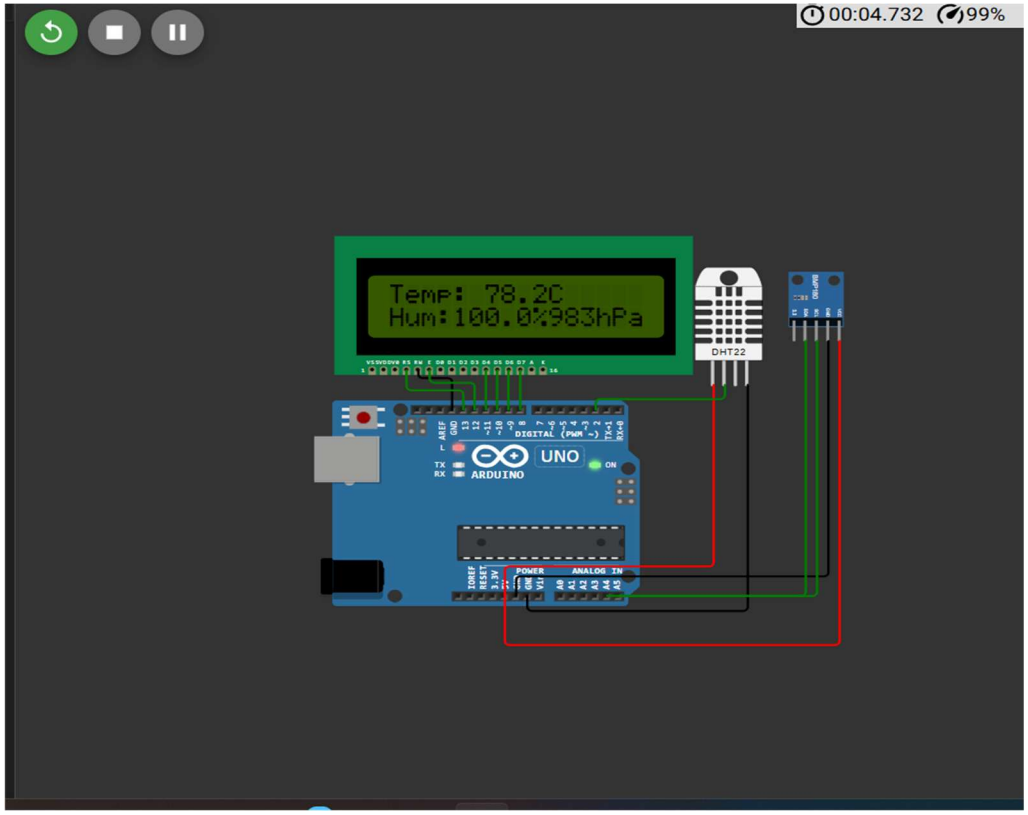

Circuit Wiring Overview

The Schematic diagram

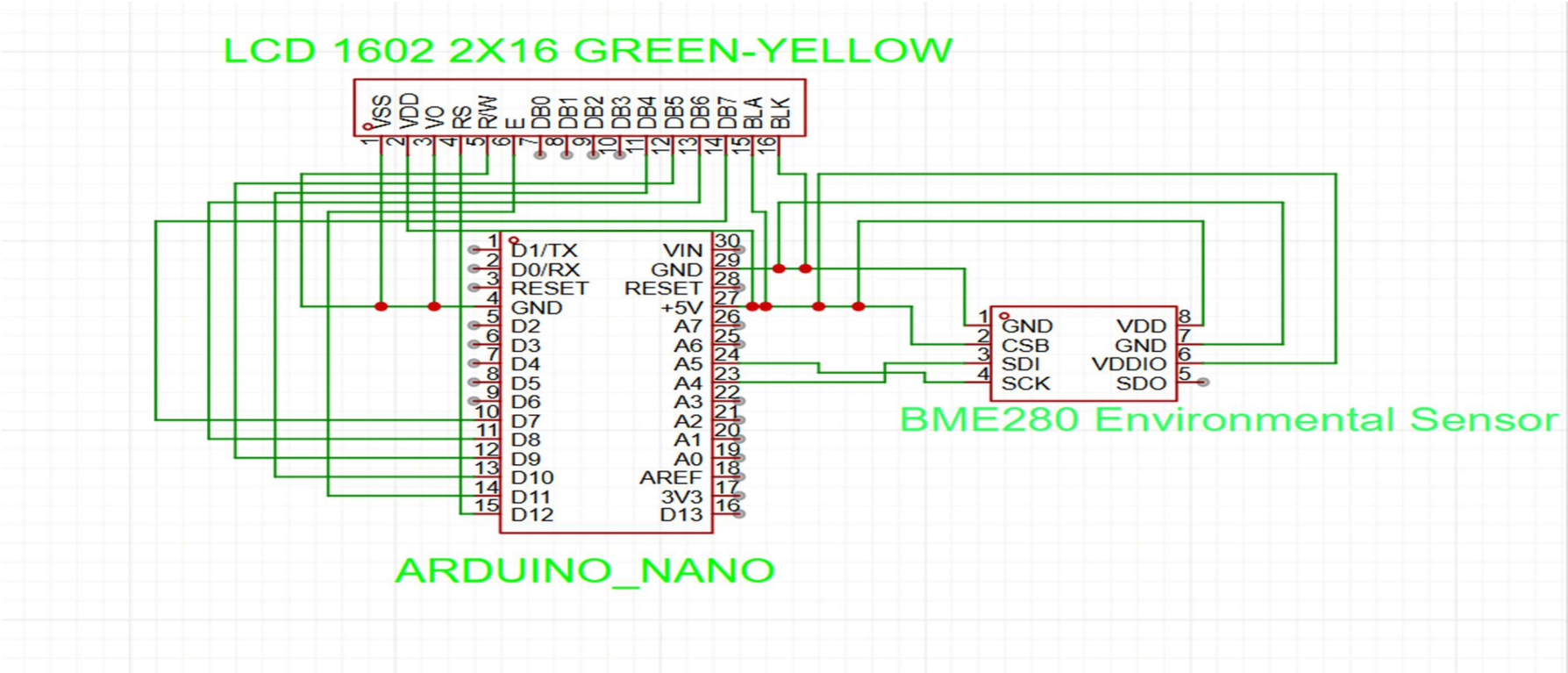

Arduino code
(Code Explanation)

The Arduino code:

- Initializes DHT22 and BMP180.
- Reads **temperature**, **humidity**, and **pressure** every 2 seconds.
- Displays them on the LCD as:
    1. Line 0: Temp: xx.xC
    2. Line 1: Hum: xx.x% xxxhPa

Libraries used

- DHT.h
- Adafruit_BMP085.h
- LiquidCrystal.h.

The next slide shows the full Arduino code for the project

```
#include <Wire.h>
#include <Adafruit_Sensor.h>
#include <Adafruit_BMP085.h>
#include <DHT.h>
#include <LiquidCrystal.h>

#define DHTPIN 2
#define DHTTYPE DHT22

DHT dht(DHTPIN, DHTTYPE);
LiquidCrystal lcd(13, 12, 11, 10, 9, 8);    // RS, E, D4, D5
Adafruit_BMP085 bmp;

void setup() {
  lcd.begin(16, 2);
  dht.begin();

  if (!bmp.begin()) {
    lcd.clear();
    lcd.print("BMP180 error");
    while (1);
  }

  lcd.print("Temp:        ");
  lcd.setCursor(0, 1);
  lcd.print("Hum:         ");
}

void loop() {
  float temperature = dht.readTemperature();
  float humidity = dht.readHumidity();
  float pressure = bmp.readPressure() / 100.0F;    // hPa

  // Display temperature on first line
  lcd.setCursor(6, 0);
  lcd.print(temperature, 1);
  lcd.print("C");

  // Display humidity and pressure on second line
  lcd.setCursor(4, 1);
  lcd.print(humidity, 1);
  lcd.print("% ");

  lcd.setCursor(10, 1);
  lcd.print(pressure, 0);    // integer pressure
  lcd.print("hPa");

  delay(2000);
}
```

Wokwi simulation

Simulation Results

- We ran the simulation in Wokwi.
- The LCD correctly shows **temperature**, **humidity**, and pressure values that update every 2 seconds.
- The **pressure** is displayed in **hPa.**
- This proves the circuit and code are functional.

Click here to simulate online 👇

Screenshot of LCD showing temperature, humidity,

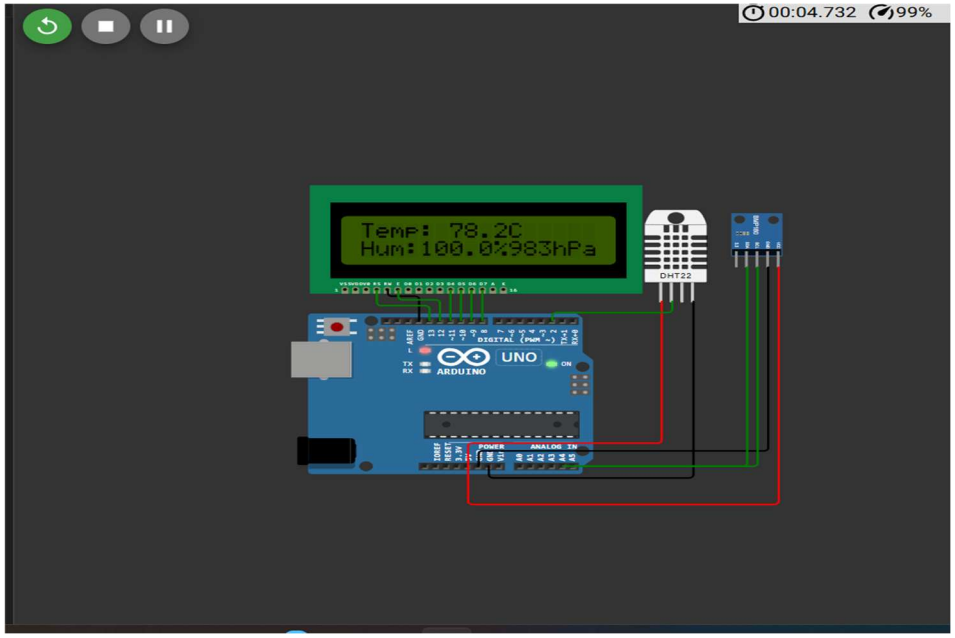

Conclusion

We successfully designed the schematic diagram for the weather station system that measures **temperature**, **humidity**, and **air pressure** using **EasyEDA** and simulation was done on **Wokwi** platform.

Challenges included the lack of a **BME280 model** in the Wokwi simulator, solved by using **DHT22** + **BMP180**.

Simulation was not working until we installed and added the required libraries needed for the project.

Future improvements could include adding Wi-Fi data logging and a physical prototype.

Click here to simulate the project online 👇

References

Adafruit BME280 Library

Wokwi Online Simulator (https://wokwi.com)

EasyEDA (https://easyeda.com)