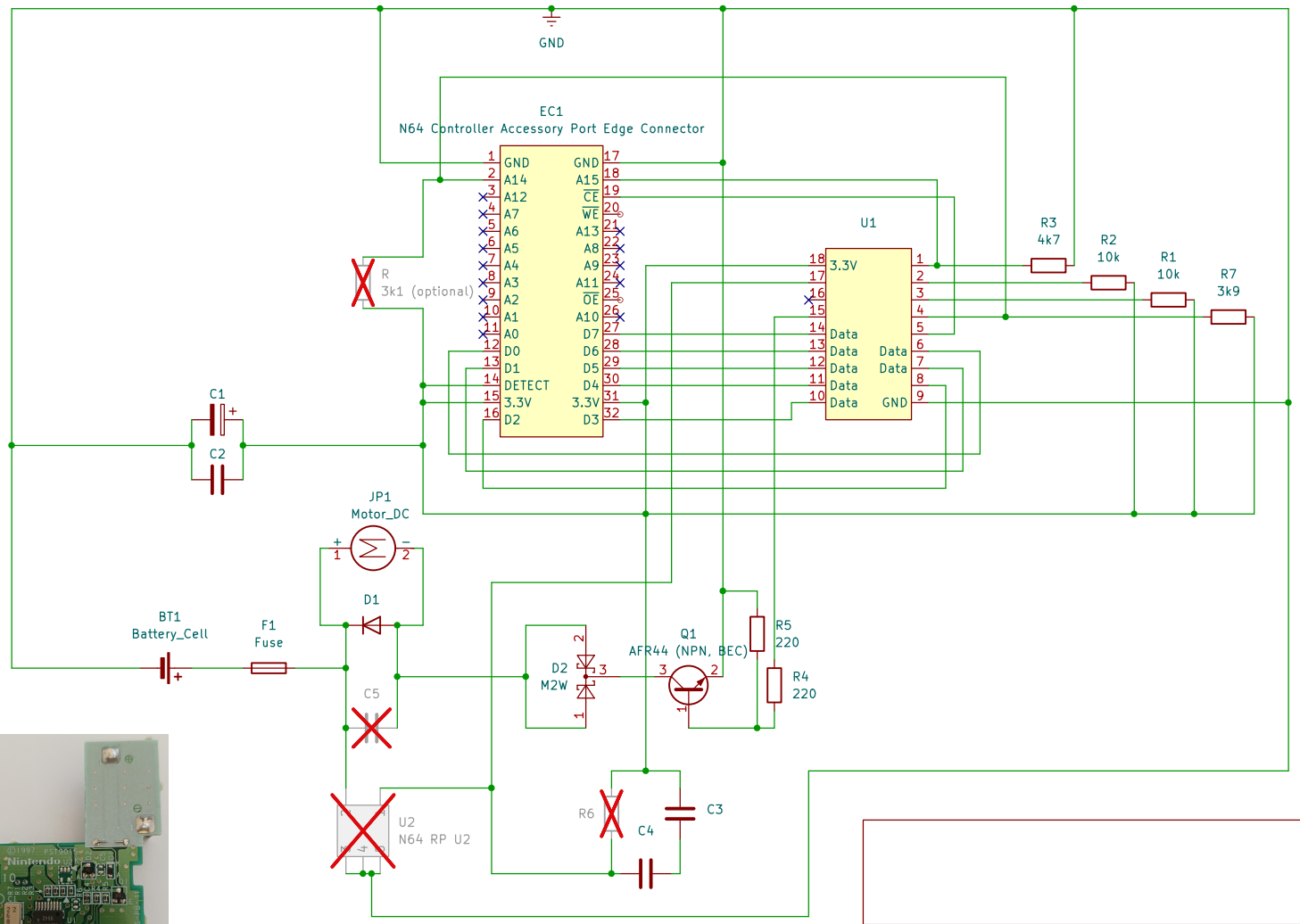

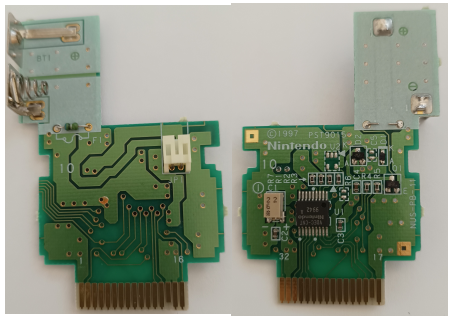

Sheet: /
File: N64 Rumble Pak.kicad_sch

Title: N64 Rumble Pak Schematic

Size: A4	Date: 28 May 2024	Rev: 1.0
KiCad E.D.A. 8.0.2		Id: 1/1