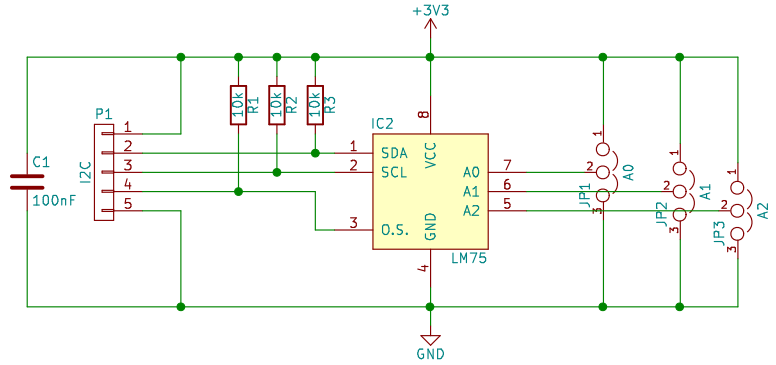

Sheet: /
File: LM75.sch

Title:

Size: A4	Date:	Rev:
KiCad E.D.A. kicad 0.201508170901+609728ubuntu14.04.1-product		Id: 1/1