VTTSI-Chat: A Demo of Real-Time Intersection Safety Monitoring with LLM-Powered Natural Language Explanation

Jason Cusati
Computer Science
Virginia Tech, Blacksburg, VA
djjay@vt.edu

Cheng-Shun Chuang
Computer Science
Virginia Tech, Alexandria, VA
cchengshun@vt.edu

Victory Uhunmwangho
Computer Science
Virginia Tech, Blacksburg, VA
victoryu@vt.edu

***Abstract*—We demonstrate VTTSI-Chat, an extension of the Virginia Tech Transportation Safety Index (VTTSI) that adds a Large Language Model (LLM)-powered conversational interface atop a cloud-native, real-time intersection safety scoring system. VTTSI fuses Empirical Bayes (EB) crash history with connected-vehicle telemetry through a hybrid RT–SI and CRITIC-weighted MCDM pipeline, producing an interpretable 0–100 safety score every 15 minutes. The new SafetyChat module bridges the gap between quantitative safety indices and human-readable situational awareness: operators, planners, and emergency responders can ask natural language questions—*"Why is the Glebe–Potomac score elevated?"* or *"Which intersection carries the highest VRU risk right now?"*—and receive evidence-grounded, contextual responses generated by a tool-augmented LLM. Unlike existing traffic-LLM systems focused on signal control or route optimization, VTTSI-Chat is the first system to pair a hybrid quantitative safety index with LLM-generated causal safety narratives for transportation management center (TMC) operators.**

I. Introduction

Real-time intersection safety data are increasingly available through connected-vehicle infrastructure, yet the gap between a numerical safety score and actionable insight remains large. Practitioners operating a transportation management center (TMC) must interpret multi-dimensional indices under time pressure, often without the domain expertise to distinguish a volume-driven spike from a behavioral anomaly.

Recent large language model (LLM) research demonstrates that tool-augmented models can reason over structured numerical data and produce accurate, calibrated explanations [11, 9]. Within transportation, LLM-based efforts have targeted signal control [6] and autonomous vehicle (AV) motion planning [7, 14], but *safety-index explanation* for infrastructure operators has not been addressed.

This demo presents **VTTSI-Chat**, a live system that pairs the existing VTTSI backend—a hybrid RT–SI + MCDM scoring pipeline deployed on Google Cloud Run—with a **SafetyChat** front-end module. SafetyChat uses a function-calling LLM that queries VTTSI API endpoints, retrieves the current and historical safety-index components, and constructs grounded natural language narratives that explain *why* a score is elevated, which signals dominate, and what operational actions may be warranted.

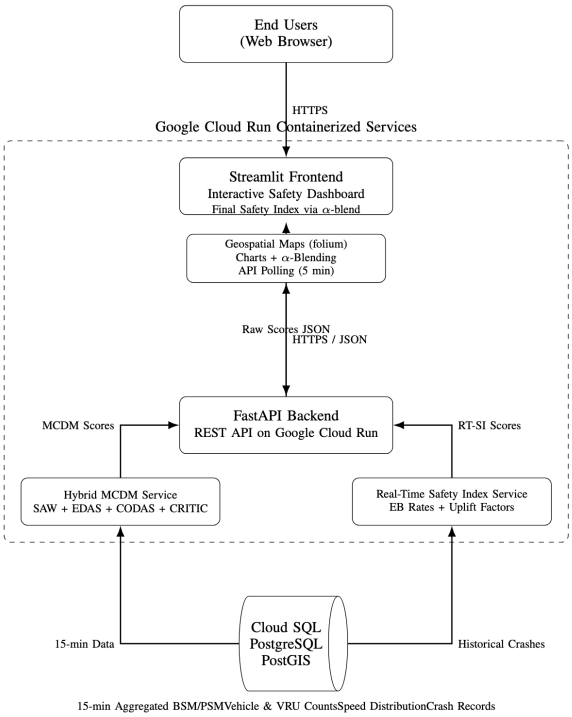

Fig. 1. VTTSI cloud architecture extended with the SafetyChat LLM module. New components are highlighted with a dashed border.

Demo Claim. VTTSI-Chat is the first system to combine (1) a hybrid EB-stabilized crash + real-time MCDM safety index with (2) an LLM that explains safety score components through natural language dialogue for TMC operators.

II. VTTSI System Overview

A. Backend Safety Engines

The VTTSI backend (FastAPI on Google Cloud Run) computes two complementary safety indices every 15 minutes using data from the VTTI Trino connected-vehicle system.

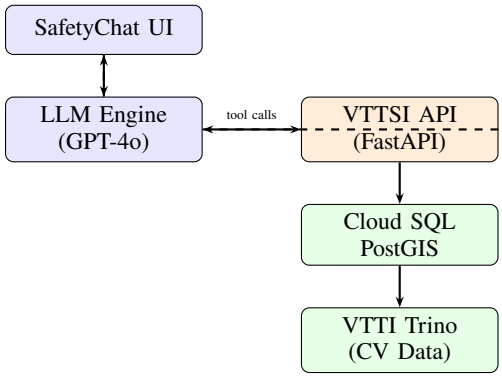

Fig. 2. SafetyChat data flow. Solid arrows: request path. Dashed: response path.

Real-Time Safety Index (RT–SI). RT–SI anchors each intersection's risk to a severity-weighted Empirical Bayes baseline derived from seven years (2017–2024) of VDOT crash records:

$$\hat{r}_i^{\mathrm{EB}} = \frac{Y_i + \lambda r_0}{1+\lambda}, \quad \lambda^\star = 10{,}000, \tag{1}$$

and multiplies by bounded real-time uplift factors for speed deficit, speed variance, and VRU–vehicle conflict exposure. The resulting $\mathrm{SI}^{\mathrm{RT}} \in [0, 100]$ captures *historically informed, operationally adjusted* risk.

MCDM Safety Index. A CRITIC-weighted multi-criteria decision-making pipeline applies SAW, EDAS, and CODAS over a decision matrix of five real-time criteria (vehicle count, VRU count, average speed, speed variance, incident count) across 15-minute intersection–time bins. CRITIC weights are recomputed every 24 hours to adapt to evolving traffic conditions [1]. The hybrid MCDM index $\overline{\mathrm{SI}}^{\mathrm{MCDM}} \in [0, 100]$ captures *instantaneous operational anomaly*.

Blended Final Index.

$$\mathrm{SI}_{i,t}^{\mathrm{Final}} = \alpha\, \mathrm{SI}_{i,t}^{\mathrm{RT}} + (1-\alpha)\, \overline{\mathrm{SI}}_{i,t}^{\mathrm{MCDM}}, \tag{2}$$

where α is adjustable (default 0.7) to favor either real-time turbulence or historical risk.

B. Existing Streamlit Dashboard

The current frontend (Streamlit, Google Cloud Run) provides interactive maps with intersection risk heat-maps, time-series charts of each index component, correlation matrices, and the α-blending slider. While comprehensive, this dashboard is passive: it presents data but does not explain what is driving a score or suggest operator actions.

III. SafetyChat: LLM-Powered Explanation Module

A. Design Rationale

VTTSI already answers *what* the safety score is; SafetyChat answers *why* and *what to do*. We adopt a *tool-augmented* LLM pattern [11]: the language model is equipped with a small set of typed function calls that map to VTTSI REST endpoints, so all numerical claims in the generated narrative are grounded in live API data rather than model hallucination.

TABLE I
VTTSI-Chat vs. Related Systems

System	Hybrid Safety Index	Real-Time Telemetry	LLM Interface	Causal Narrative
Google Maps / Apple Maps	✗	✓	✗	✗
Waycare (commercial)	✗	✓	✗	✗
ATSPM (FHWA)	✗	✓	✗	✗
TrafficGPT [13]	✗	✓	✓	✗
LLMLight [6]	✗	✓	✓	✗
GPT-Driver [7]	✗	✓	✓	✗
VTTSI-Chat (ours)	✓	✓	✓	✓

B. LLM Tool Definitions

SafetyChat exposes four tools to the LLM via the OpenAI function-calling protocol [9]:

1) `get_safety_score(intersection, window)` — returns current RT–SI, MCDM, and blended scores with top contributing factors.
2) `get_component_breakdown(intersection, time)` — returns the weighted criterion values (vehicle count, VRU count, avg speed, speed variance, incident count) and CRITIC weights for the requested bin.
3) `get_historical_baseline(intersection)` — returns the EB prior, 7-year crash severity breakdown, and $\lambda^\star$.
4) `compare_intersections(intersection_list, metric)` — ranks a list of intersections by any index component over a lookback window.

The system prompt instructs the LLM to cite tool outputs explicitly (e.g., quoting numerical values), avoid extrapolating beyond available data, and flag data-gap periods when telemetry is sparse.

C. Differentiation from Existing Systems

Table I summarizes how VTTSI-Chat differs from related systems. Existing LLM+traffic systems target either *signal control* [6, 13] or *AV motion planning* [7, 14]; none operate on a hybrid crash–telemetry safety index to generate operator-facing safety narratives. Commercial safety dashboards (e.g., StreetLight, Waycare) provide ML predictions with no conversational or causal explanation layer.

IV. Demo Scenarios and Use Cases

The live demonstration runs against the production VTTSI deployment (https://cs6604-trafficsafety-180117512369.europe-west1.run.app/) and a co-deployed SafetyChat service. Attendees interact directly with the chat interface. Four primary use cases are shown.

A. Use Case 1: TMC Operator Morning Briefing

Scenario: A TMC operator asks: *"Give me a morning safety briefing for all monitored intersections."*
Demo Action: SafetyChat calls `compare_intersections` to rank all intersections by blended score, then

TABLE II
SUMMARY OF DEMO USE CASES

Use Case	Key Interaction	Primary User
Morning briefing	Multi-intersection rank + narrative	TMC Operator
Causal explanation	Score decomposition, CRITIC weight trace	Planner
Responder routing	Comparative real-time score query	Dispatcher
Public engagement	Trend + plain-language risk translation	Official / Public

`get_component_breakdown` for the two highest-ranked sites. It produces a narrative identifying peak-hour risk windows, dominant driving factors (e.g., speed variance spike, elevated VRU counts), and compares scores to the 7-day rolling average.

Distinction: The existing Streamlit dashboard requires the operator to navigate multiple charts; SafetyChat synthesizes multi-intersection data into a single situational-awareness paragraph in under five seconds.

B. Use Case 2: Causal Safety Explanation for Planners

Scenario: A transportation planner asks: *"Why did the E. Broad–N. Washington intersection score above 70 yesterday at 5 PM?"*
Demo Action: SafetyChat retrieves the 15-minute bin data, identifies that both vehicle count and incident count were in the 90th percentile, and notes that CRITIC assigned elevated weight to incident count in that period. The narrative explains that a cluster of red-light-running events co-occurred with peak through-volume, consistent with the intersection's historical risk profile from VDOT crash records.

C. Use Case 3: Emergency Responder Routing Support

Scenario: An emergency dispatcher asks: *"Which intersection between Glebe–Potomac and Birch–W. Broad has lower current risk for a priority vehicle crossing?"*
Demo Action: SafetyChat calls `get_safety_score` for both intersections, comparing RT–SI, MCDM, and blended indices in real time, and identifies the lower-risk option with reasoning grounded in current VRU counts and speed variance.

D. Use Case 4: Public or Stakeholder Engagement

Scenario: A city council member, unfamiliar with transportation engineering, asks: *"Is my neighborhood intersection getting safer over time?"*
Demo Action: SafetyChat retrieves the 30-day trend from the blended index and, where available, contextualizes it against VDOT crash severity trends, translating index values into plain-language risk levels (e.g., "The score has dropped from 45 to 31 over the past month, meaning current conditions are *moderate risk*, comparable to early-morning weekend conditions").

V. RELATED WORK

Crash-based and hybrid safety indices. EB-stabilized crash models [10, 8] and MCDM-based indices [1, 2] provide the theoretical foundation for VTTSI's scoring pipeline. Surrogate safety indicators [12, 5] complement crash data with real-time conflict proxies. VTTSI unifies these streams; the SafetyChat module adds the explanation layer that prior hybrid-index systems lack.

LLMs in transportation. TrafficGPT [13] applies GPT-class models to traffic flow analysis and signal timing; it does not provide a safety index or causal narrative. LLMLight [6] uses LLMs as traffic signal controllers via reinforcement learning prompts; it is limited to signal optimization. GPT-Driver [7] and DriveVLM [14] apply LLMs to vehicle-level motion planning; they operate at the AV layer, not the infrastructure monitoring layer. Behboudi et al. [3] survey ML-based crash analysis but do not address conversational interfaces or real-time hybrid indices.

Positioning. VTTSI-Chat is differentiated by combining: (i) a *validated hybrid safety index* that fuses long-term crash history with 15-minute telemetry, (ii) a *tool-augmented LLM* that accesses live API data rather than relying on embedded knowledge, and (iii) operator-facing *causal narratives* that trace score components back to raw signals. No existing system offers all three.

VI. CONCLUSION

This demo presents VTTSI-Chat, a cloud-native intersection safety system that pairs a hybrid EB + MCDM safety index with a tool-augmented LLM frontend. The SafetyChat module closes the gap between quantitative safety scores and human-readable, causally grounded situational awareness, enabling TMC operators, planners, emergency responders, and the public to engage with real-time safety intelligence through natural language. By grounding all LLM outputs in live API calls, SafetyChat avoids hallucination while retaining the flexibility of conversational interaction. Future work will integrate the Agentic Traffic Safety Knowledge Graph (TS–KG) [4] as an additional tool, enabling the LLM to reason over intersection geometry, conflict topology, and causal trajectory motifs.

ACKNOWLEDGMENT

This research used AI assistance in generating content. The VTTSI system was developed in collaboration with the Virginia Tech Transportation Institute (VTTI).

REFERENCES

[1] A. Amraji. "Combined Safety Index Using CRITIC Weighting". In: *Journal of Transportation Research* 15.2 (2025), pp. 200–210.

[2] Morteza AsadAmraji, Azarakhsh Salem, and Shila Shirinbayan. "A Combined Index of Proactive and Reactive Data for Rating the Safety of Road Sections". In: *Iranian Journal of Science and Technology – Transactions of Civil Engineering* 49.1 (2025), pp. 985–995. DOI: 10.1007/s40996-024-01552-0.

[3] Noushin Behboudi, Sobhan Moosavi, and Rajiv Ramnath. “Recent Advances in Traffic Accident Analysis and Prediction: A Comprehensive Review of Machine Learning Techniques”. In: *arXiv preprint arXiv:2406.13968* (2024).

[4] Jason Cusati. *Agentic Knowledge Graphs for Traffic Safety*. Tech. rep. Unpublished manuscript. Virginia Tech, 2025.

[5] Douglas Gettman and Larry Head. *Surrogate Safety Assessment Model and Validation: Final Report*. Tech. rep. FHWA, 2003.

[6] Siqi Lai, Zhao Chen, et al. “LLMLight: Large Language Models as Traffic Signal Control Agents”. In: *Proceedings of the 30th ACM SIGKDD Conference on Knowledge Discovery and Data Mining*. 2024. DOI: 10.48550/arXiv.2312.16171.

[7] Jiageng Mao et al. “GPT-Driver: Learning to Drive with GPT”. In: *Advances in Neural Information Processing Systems (NeurIPS) Workshop*. 2023. DOI: 10.48550/arXiv.2310.01415.

[8] Alfonso Montella et al. “Systemic Approach to Improve Safety of Urban Unsignalized Intersections: Development and Validation of a Safety Index”. In: *Accident Analysis & Prevention* 141 (2020), p. 105523. DOI: 10.1016/j.aap.2020.105523.

[9] OpenAI. *Function Calling in the OpenAI API*. OpenAI Platform Documentation. 2024. URL: https://platform.openai.com/docs/guides/function-calling.

[10] Bhagwant Persaud and Craig Lyon. “Empirical Bayes Before–After Safety Studies: Lessons Learned from Two Decades of Experience and Future Directions”. In: *Accident Analysis & Prevention* 39.3 (2007), pp. 546–555. DOI: 10.1016/j.aap.2006.09.009.

[11] Timo Schick, Jane Dwivedi-Yu, Roberto Dessì, et al. “Toolformer: Language Models Can Teach Themselves to Use Tools”. In: *Advances in Neural Information Processing Systems* 36 (2023). DOI: 10.48550/arXiv.2302.04761.

[12] John Schultz. “A Study on Surrogate Safety Indicators”. In: *Journal of Transportation Safety*. Vol. 12. 3. 2025, pp. 123–134.

[13] Ning Shi, Xu Zhao, and Junfeng Zheng. “TrafficGPT: Viewing, Processing and Interacting with Traffic Foundation Models”. In: *Proceedings of the 31st ACM SIGSPATIAL International Conference on Advances in Geographic Information Systems*. 2023. DOI: 10.48550/arXiv.2309.06719.

[14] Xiaoyu Tian, Junru Gu, Bailin Li, et al. “DriveVLM: The Convergence of Autonomous Driving and Large Vision-Language Models”. In: *Conference on Robot Learning (CoRL)*. 2024. DOI: 10.48550/arXiv.2402.12289.