QPSK, OQPSK and DQPSK Modulator and Demodulator

Scientech 2808

Product Tutorial

Ver. 1.1

Designed & Manufactured in India by-
An ISO 9001:2008 company
Scientech Technologies Pvt. Ltd.
94, Electronic Complex, Pardesipura, Indore - 452 010 India,
✆ + 91-731 4211100,✉: info@scientech.bz , : www.ScientechWorld.com

QPSK, OQPSK and DQPSK Modulator and Demodulator
Scientech 2808
Table of Contents

1. Safety Instructions 4
2. Features 6
3. Technical Specifications 6
4. Quadrature Phase Shift Keying Modulation 7
5. Experiments
6. Experiment 1
   - Experiment 1 10
     Study and analysis of bit pattern generation
   - Experiment 2 13
     Study and analysis of 2-bit encoding
   - Experiment 3 16
     Study and analysis of carrier Signal
   - Experiment 4 18
     Study and analysis of I-Channel and Q-Channel Modulation
   - Experiment 5 20
     Study and analysis of QPSK Modulation
   - Experiment 6 23
     Study and analysis of Complex Multiplier output
   - Experiment 7 28
     Study and analysis of Integrator output
   - Experiment 8 31
     Study and analysis of Comparator output
   - Experiment 9 36
     Study and analysis of QPSK Demodulated Output
7. Offset Quadrature Phase Shift Keying Modulation 39
   - Experiment 10 42
     Study and analysis of bit pattern generation
   - Experiment 11 45
     Study and analysis of 2-bit encoding
   - Experiment 12 48
     Study and analysis of offset encoding of Q-Channel
   - Experiment 13 50
     Study and analysis of carrier Signal
   - Experiment 14 52
     Study and analysis of I-Channel and Q-Channel Modulation
   - Experiment 15 55
     Study and analysis of OQPSK Modulation

- Experiment 16 — 58
  Study and analysis of Complex Multiplier Output
- Experiment 17 — 63
  Study and analysis of Integrator output
- Experiment 18 — 66
  Study and analysis of Comparator output
- Experiment 19 — 71
  Study and analysis of Offset Decoding Output
- Experiment 20 — 75
  Study and analysis of OQPSK Demodulated Output

8. Differential Quadrature Phase Shift Keying Modulation — 78
   - Experiment 21 — 80
     Study and analysis of bit pattern generation.
   - Experiment 22 — 83
     Study and analysis of 2-bit encoding
   - Experiment 23 — 86
     Study and analysis of differential encoding of I-Channel and Q-Channel
   - Experiment 24 — 90
     Study and analysis of carrier Signal
   - Experiment 25 — 92
     Study and analysis of I-Channel and Q-Channel Modulation
   - Experiment 26 — 96
     Study and analysis of QPSK Modulation
   - Experiment 27 — 99
     Study and analysis of Complex Multiplier output
   - Experiment 28 — 105
     Study and analysis of Integrator output
   - Experiment 29 — 108
     Study and analysis of Comparator output
   - Experiment 30 — 113
     Study and analysis of differential Decoding Output
   - Experiment 31 — 118
     Study and analysis of OQPSK Demodulated Output

9. Case Study-1 — 121
10. Case Study-2 — 129
11. Warranty — 138

Safety Instructions

Read the following safety instructions carefully before operating the product.

To avoid any personal injury, or damage to the product, or any products connected to it;

Do not operate the instrument if you suspect any damage within.

The instrument should be serviced by qualified personnel only.

For your Safety:

Use proper Mains cord : Use only the mains cord designed for this product. Ensure that the mains cord is suitable for your country.

Ground the Instrument : This product is grounded through the protective earth conductor of the mains cord. To avoid electric shock the grounding conductor must be connected to the earth ground. Before making connections to the input terminals, ensure that the instrument is properly grounded.

Observe Terminal Ratings : To avoid fire or shock hazards, observe all ratings and marks on the instrument.

Use only the proper Fuse : Use the fuse type and rating specified for this product.

Use in proper Atmosphere : Please refer to operating conditions given in the manual.

1. **Do not operate in wet / damp conditions.**
2. **Do not operate in an explosive atmosphere.**
3. **Keep the product dust free, clean and dry.**

Scientech 2808

Introduction

Scientech TechBooks are compact and user friendly learning platforms to provide a modern, portable, comprehensive and practical way to learn Technology. Each TechBook is provided with detailed Multimedia learning material which covers basic theory, step by step procedure to conduct the experiment and other useful information.
Scientech TechBook 2808 provides an extensive hands on learning on QPSK, OQPSK, DQPSK Modulator & Demodulator.

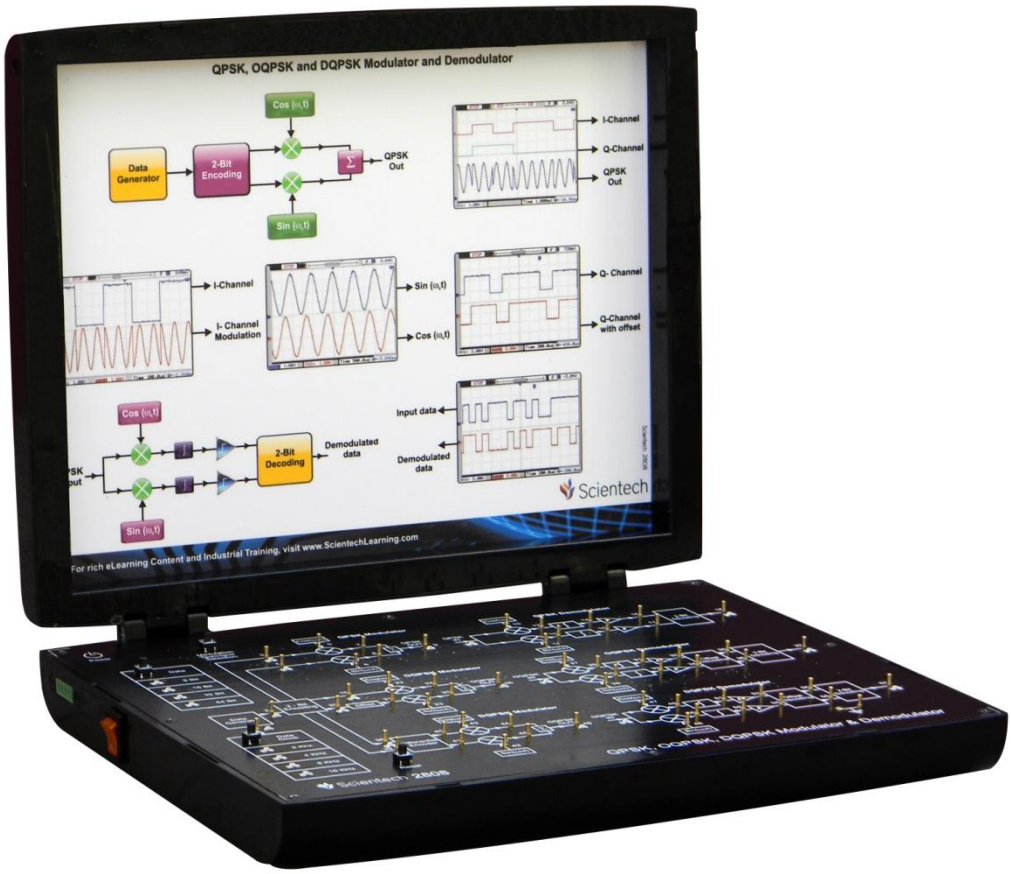

Features

- Personalized Learning platform
- On-board four variable line speed rates and single bit data pattern.
- On board DDS technology based Carrier Generator
- SMD LED indicators
- Can be issued just like a book for hands-on learning
- 2 Year Warranty

Technical Specifications

Modulation Technique	:	Quadrature Phase Shift Keying Modulation and Demodulation Offset Quadrature Phase Shift Keying Modulation and Demodulation Differential Quadrature Phase Shift Keying Modulation and Demodulation
Internal Data Generator	:	Digital data
Data Pattern	:	8-Bit, 16-Bit, 32-Bit, 64-Bit
Frequency	:	2 KHz, 4 KHz, 8 KHz, 16 KHz
Internal Carrier Generator	:	Direct Digital Synthesized
Carrier Signal	:	Sine, Cosine
SMD LED Indicators	:	25 nos. for Digital data selection, data frequency selection and technique selection
Number of Test Points	:	57 nos.
Crystal Frequency	:	8MHz
Selection Mode	:	Push switches
Dimensions (mm)	:	W 326 x D 252 x H 52
Power Supply	:	110V - 260V AC, 50/60Hz
Weight	:	1.5Kg (approximately)
Operating Condition	:	$0\text{-}40^0$ C, 85% RH
Product Tutorials	:	Online
Included Accessories	:	2 mm Patch cord – 1No. TechBook Power Supply Module- 1No.

Quadrature Phase Shift Keying Modulator and Demodulator

Introduction:

What is Quadrature Phase Shift Keying Modulator?

Quadrature Phase Shift Keying or Quadrature PSK as it is sometimes called, is an other form of angle-modulated, constant-amplitude digital modulation. QPSK is an *M*-ary encoding scheme where N=2 and M=4(hence, the name "quaternary" meaning "4").

With QPSK, four output phases are possible for a single carrier frequency. Because the digital input to a QPSK modulator is a binary signal, to produce four different input combinations, the modulator requires more than a single input bit to determine the output condition.

How Quadrature Phase Shift Keying Modulator works?

QPSK involves the splitting of a data stream mk (t)=m0,m1,m2, . . ., into an in-phase stream or Even data mI (t) = m0,m2,m4, . . . and a quadrature stream or Odd data mQ(t) = m1,m3,m5, ... Both the streams have half the bit rate of the data stream mk(t), and modulate the cosine and sine functions of a carrier wave simultaneously. As a result, phase changes across intervals of 2Tb, where Tb is the time interval of a single bit (mk (t). The phase transitions can be as large as ±180. Sudden phase reversals of ±180 can throw the amplifiers into saturation. The phase reversals of ±180 cause the envelope to go to zero momentarily. This may make us susceptible to non-linearity in amplifier circuitry. The above may be prevented using linear amplifiers but they are more expensive and power consuming. A solution to the above mentioned problem is the use of OQPSK. The two bit streams generated from 1/2bit encoding technique are used as I channel data and Q channel data respectively for modulation of Cosine and Sine wave.

Phase relation between I & Q channel data and carrier phase.

Channel Data		**Carrier Phase**	
Q-Data	I-Data	I	Q
0	0	0º	225º
1	0	90º	315º
1	1	180º	45º
0	1	270º	315º

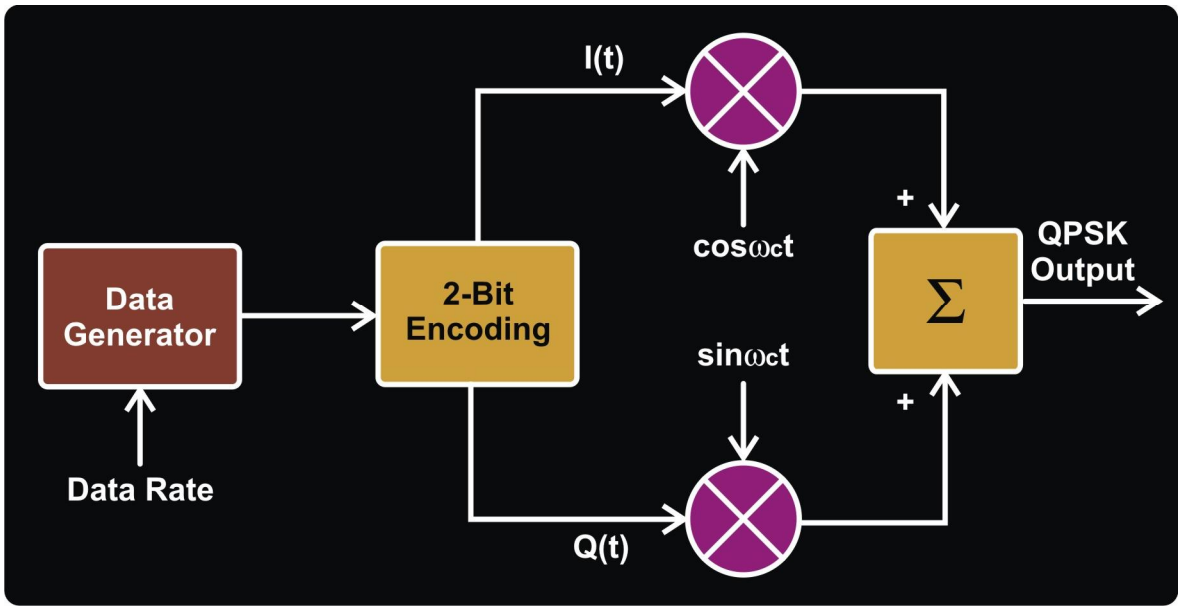

QPSK Constellation Diagram:

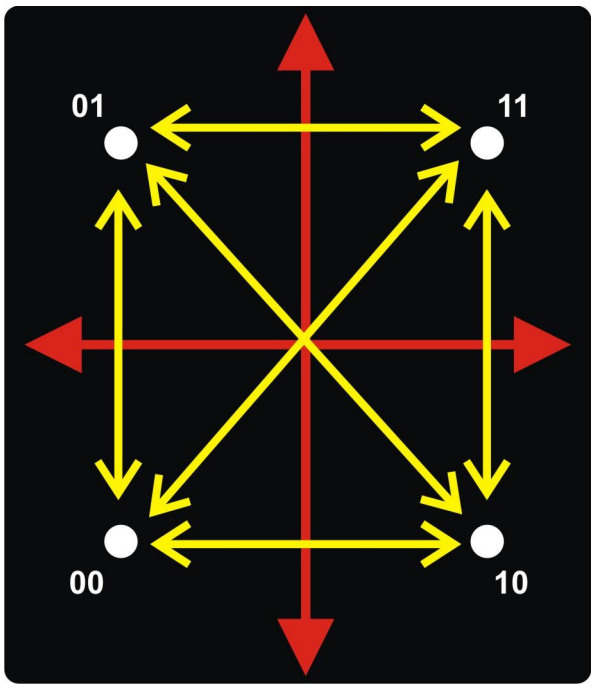

Quadrature Phase Shift Keying Demodulator:

The incoming modulated signal is multiplied with the cosine and the sine signal generated from the NCO. The output of the multiplier contains high ($f$in+ $f$nco) and low ($f$in-$f$nco) frequency components. Then integrator integrate the gain of signal and then with the help of comparator input signal is received on I and Q channel of demodulator. Then this data form I and Q channel is give to parallel to serial converter to give original data.

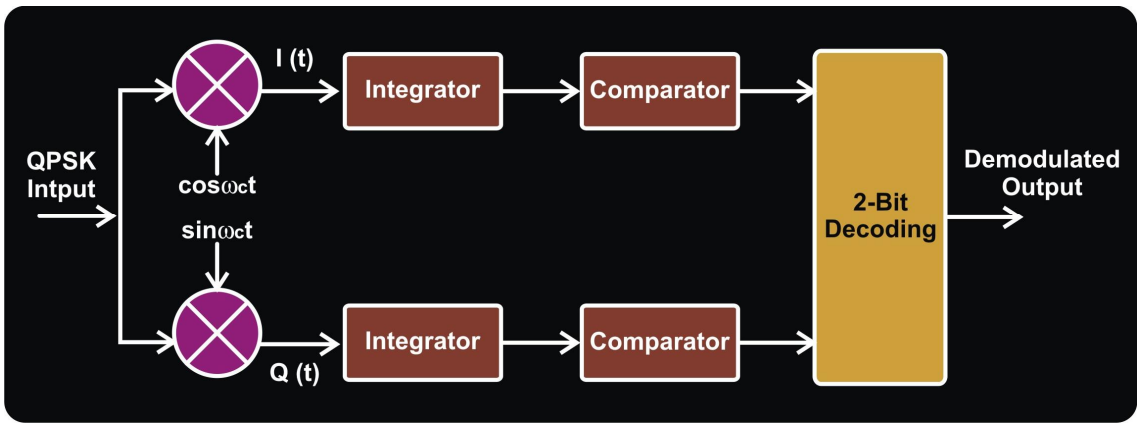

Applications:

- CDMA System.
- Wireless and cable modem.
- Video conferencing.
- Satellite Communication MPEG-2 video.
- Iridium (voice/data) Satellite Communication System.
- Cellular phone systems and other forms of digital communication over an RF carrier.

Advantages:

- It provides high performance on bandwidth efficiency and bit error rate.

Experiment 1

Objective:

- Study and analysis of bit pattern generation.
  - 8 bit, 16 bit, 32 bit and 64 bit.
- Observe bit pattern generation at different data rate i.e.
  - 2 KHz, 4 KHz, 8 KHz and 16 KHz.

Setup:

- TechBook Scientech 2808
- Power Supply
- Oscilloscope/DSO
- Test probe

Connection Diagram

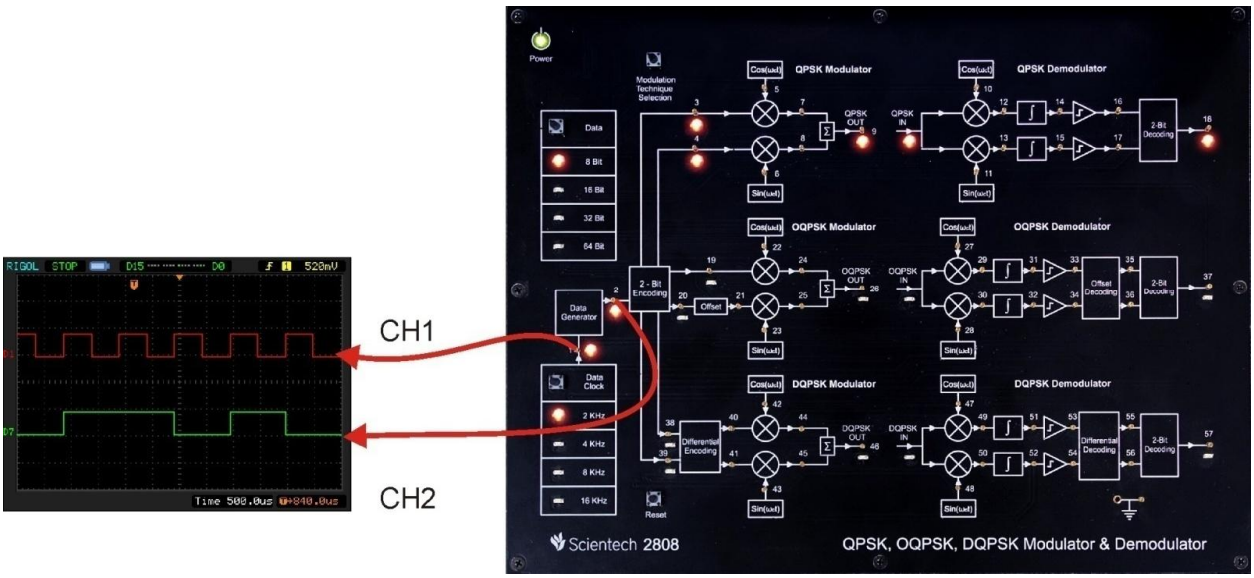

Procedure:

Step 1 : Connect and switch on the Power Supply of Scientech 2808

Step 2 : Quadrature Phase Shift Keying Modulator is selected by default and LEDs of corresponding technique will glow when user switch on the power.

Step 3 : Select *bit pattern* using push button i.e. 8 bit, 16 bit, 32 bit and 64 bit. And respective LED will glow. Observe the bit pattern on test point (TP2).

Step 4 : Select *data rate* using push button i.e. 2 KHz, 4 KHz, 8 KHz and 16 KHz. Observe the change in frequency on test point (TP1).

Scientech 2808

Observation:

- Observe the input bit pattern at TP2 by varying bit pattern using respective push button.
- Observe the data rate at TP1 by varying data rate using push button.

Data Bit	Data Rate	DSO Results
32 Bits	2 KHz	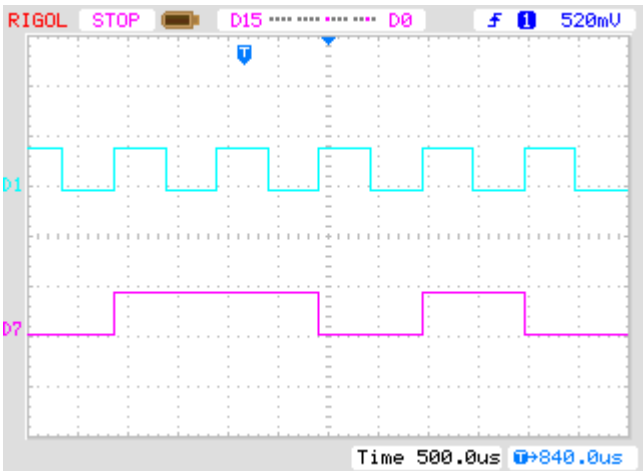 D1 : TP1 D7 : TP2

Scientech 2808

32 Bits	4 KHz	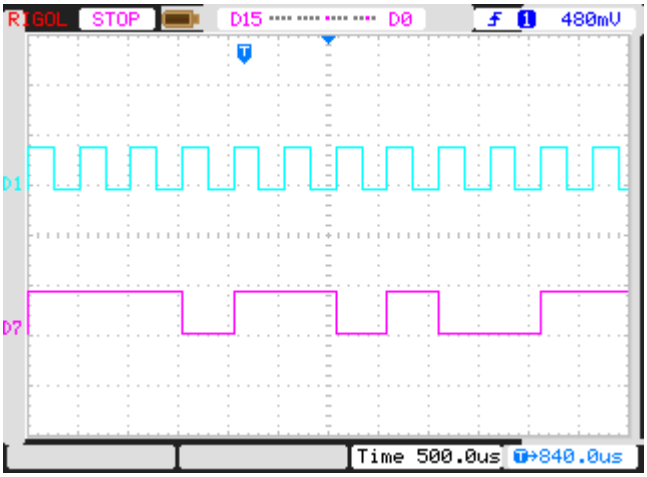 D1 : TP1 D7 : TP2
16 Bits	4 KHz	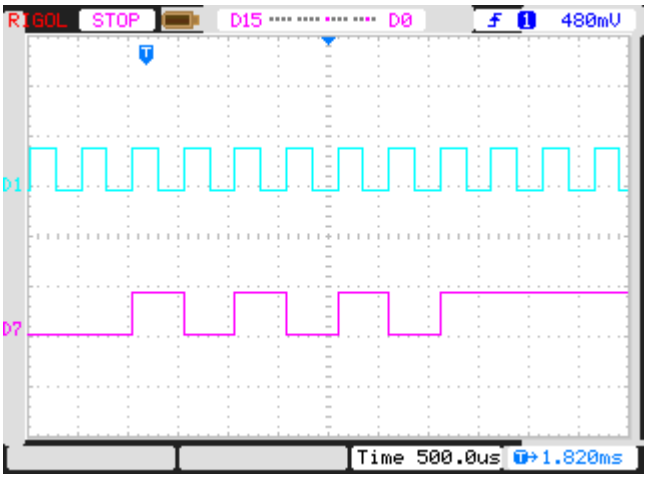 D1 : TP1 D7 : TP2

Experiment 2

Objective:

- Study and analysis of 2-bit encoding
  - I-Channel
  - Q-Channel

Setup:

- TechBook Scientech 2808
- Power Supply
- Oscilloscope/DSO
- Test probe

Connection Diagram:

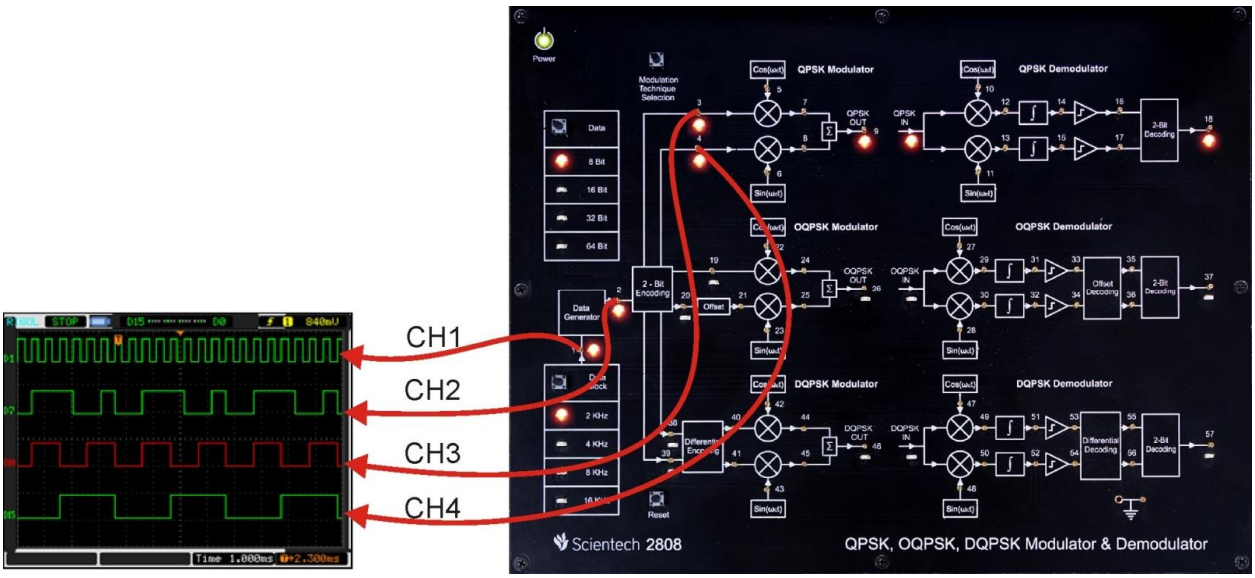

Procedure:

Step 1 : Connect and switch on the Power Supply of Scientech 2808

Step 2 : Quadrature Phase Shift Keying Modulator is selected by default and LEDs of corresponding technique will glow when user switch on the power.

Step 3 : Select *bit pattern* using push button i.e. 8 bit, 16 bit, 32 bit and 64 bit. And respective LED will glow. Observe the bit pattern on test point (TP2).

Step 4 : Select *data rate* using push button i.e. 2 KHz, 4 KHz, 8 KHz and 16 KHz. Observe the change in frequency on test point (TP1).

Step 5 : Observe the 2-bit encoding i.e., I-Channel (TP3) and Q-Channel (TP4).

Scientech 2808

Observation:

- Observe the input bit pattern at TP2 by varying bit pattern using respective push button.
- Observe the data rate at TP1 by varying data rate using push button.
- Observe the I-Channel (TP3) and Q-Channel (TP4).

Data Bit	Data Rate	Result
8 Bit	4 KHz	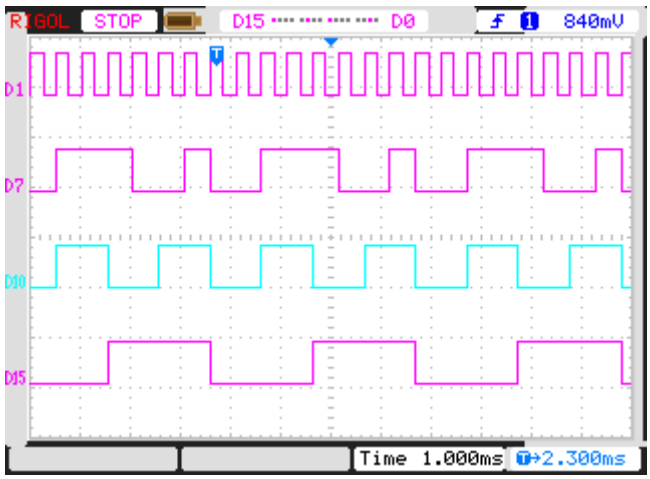 D1:TP1 D7:TP2 D10:TP3 D15:TP4
32 Bit	8 KHz	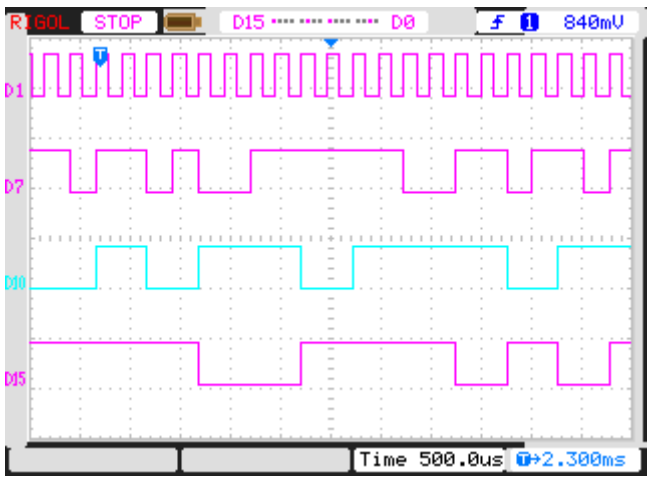 D1:TP1 D7:TP2 D10:TP3 D15:TP4

Scientech 2808

64 Bit	4 KHz	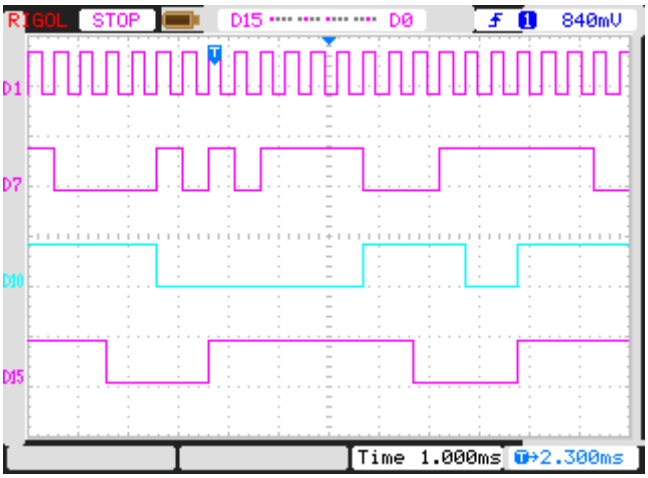 D1:TP1 D7:TP2 D10:TP3 D15:TP4

Experiment 3

Objective:

- Study and analysis of carrier Signal.
  - Cosine
  - Sine

Setup:

- TechBook Scientech 2808
- Power Supply
- Oscilloscope/DSO
- Test probe

Connection Diagram:

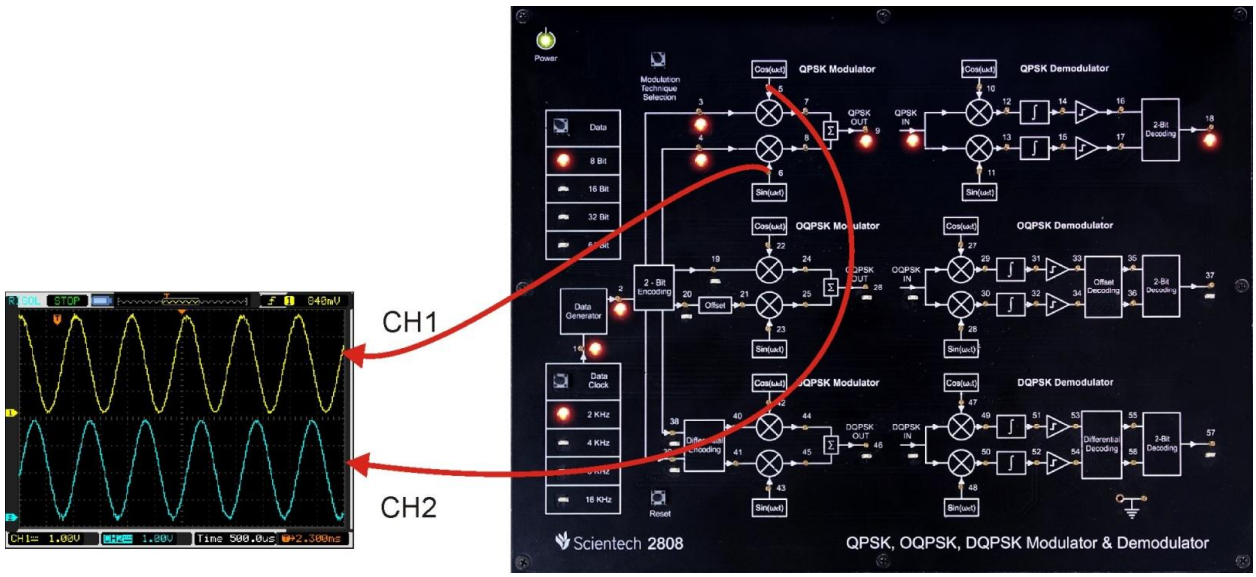

Procedure:

Step 1 : Connect and switch on the Power Supply of Scientech 2808

Step 2 : Quadrature Phase Shift Keying Modulator is selected by default and LEDs of corresponding technique will glow when user switch on the power.

Step 3 : Select *bit pattern* using push button i.e. 8 bit, 16 bit, 32 bit and 64 bit. And respective LED will glow. Observe the bit pattern on test point (TP2).

Step 4 : Select *data rate* using push button i.e. 2 KHz, 4 KHz, 8 KHz and 16 KHz. Observe the change in frequency on test point (TP1).

Step 5 : Observe the 2-bit encoding i.e., I-Channel (TP3) and Q-Channel (TP4).

Step 6 : Observe Carrier Signal i.e., Sine (TP6) and Cosine (TP5).

Scientech 2808

Observation:

- Observe the input bit pattern at TP2 by varying bit pattern using respective push button.
- Observe the data rate at TP1 by varying data rate using push button.
- Observe the I-Channel (TP3) and Q-Channel (TP4).
- Observe Carrier Signal i.e., Sine (TP6) and Cosine (TP5), Frequency of Carrier signal will change wrt data rate.

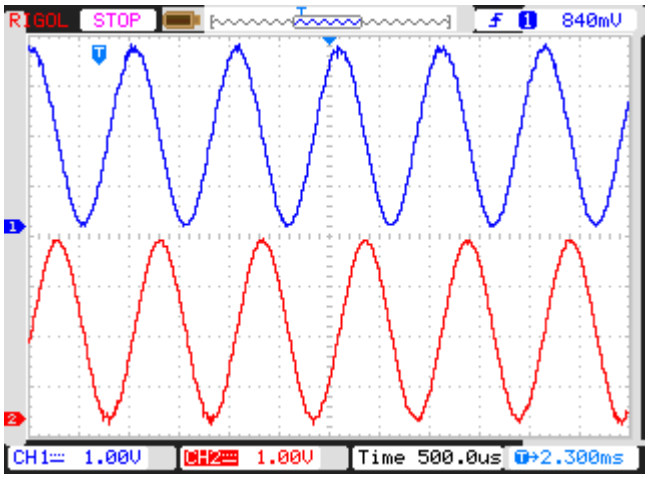

CH1: TP5 CH2: TP6

Experiment 4

Objective:

- Study and analysis of I-Channel and Q-Channel Modulation

Setup:

- TechBook Scientech 2808
- Power Supply
- Oscilloscope/DSO
- Test probe

Connection Diagram:

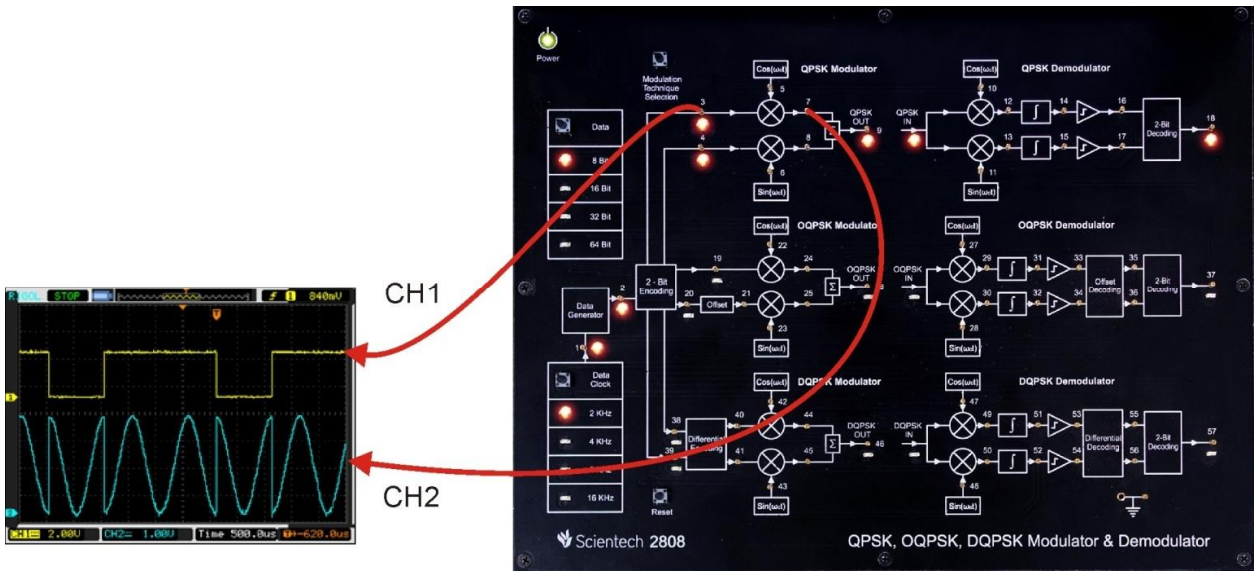

Procedure:

Step 1 : Connect and switch on the Power Supply of Scientech 2808

Step 2 : Quadrature Phase Shift Keying Modulator is selected by default and LEDs of corresponding technique will glow when user switch on the power.

Step 3 : Select *bit pattern* using push button i.e. 8 bit, 16 bit, 32 bit and 64 bit. And respective LED will glow. Observe the bit pattern on test point (TP2).

Step 4 : Select *data rate* using push button i.e. 2 KHz, 4 KHz, 8 KHz and 16 KHz. Observe the change in frequency on test point (TP1).

Scientech 2808

Observation:

- Observe the input bit pattern at TP2 by varying bit pattern using respective push button.
- Observe the data rate at TP1 by varying data rate using push button.
- Observe the 2-bit encoding i.e., I-Channel (TP3) and Q-Channel (TP4).
- Observe Carrier Signal i.e., Sine (TP6) and Cosine (TP5), Frequency of Carrier signal will change wrt data rate.
- Observe I-Channel (TP7) and Q-Channel (TP8) Modulated Signal.

Data Bit	Data Rate	DSO Results
32 Bit	4 KHz	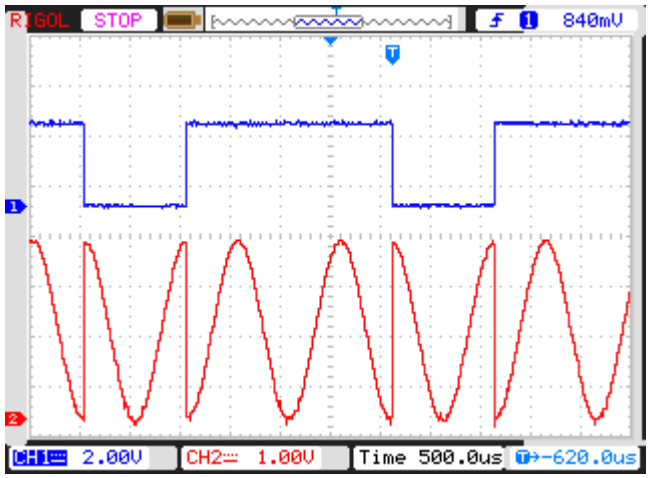 CH1: TP3 CH2: TP7
32 Bit	4 KHz	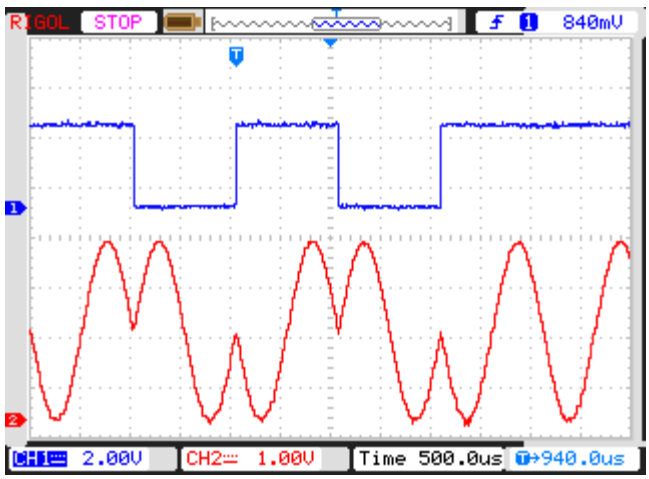 CH1: TP4 CH2: TP8

Experiment 5

Objective:

- Study and analysis of QPSK Modulation.

Setup:

- TechBook Scientech 2808
- Power Supply
- Oscilloscope/DSO
- Test probe

Connection Diagram:

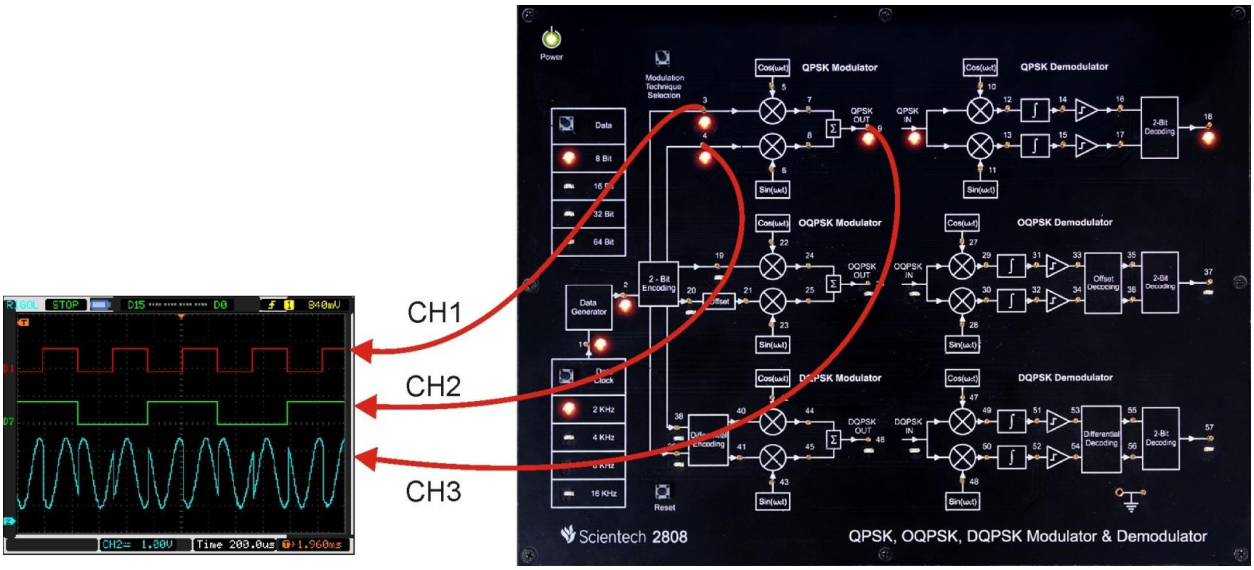

Procedure:

Step 1 : Connect and switch on the Power Supply of Scientech 2808

Step 2 : Quadrature Phase Shift Keying Modulator is selected by default and LEDs of corresponding technique will glow when user switch on the power.

Step 3 : Select *bit pattern* using push button i.e. 8 bit, 16 bit, 32 bit and 64 bit. And respective LED will glow. Observe the bit pattern on test point (TP2).

Step 4 : Select *data rate* using push button i.e. 2 KHz, 4 KHz, 8 KHz and 16 KHz. Observe the change in frequency on test point (TP1).

Observation:

- Observe the input bit pattern at TP2 by varying bit pattern using respective push button.
- Observe the data rate at TP1 by varying data rate using push button.
- Observe the 2-bit encoding i.e., I-Channel (TP3) and Q-Channel (TP4).
- Observe Carrier Signal i.e., Sine (TP6) and Cosine (TP5), Frequency of Carrier signal will change wrt data rate.
- Observe I-Channel (TP7) and Q-Channel (TP8) Modulated Signal.
- Observe QPSK Modulated Signal at TP9.

Data Bit	Data Rate	DSO Results
8 Bit	16 KHz	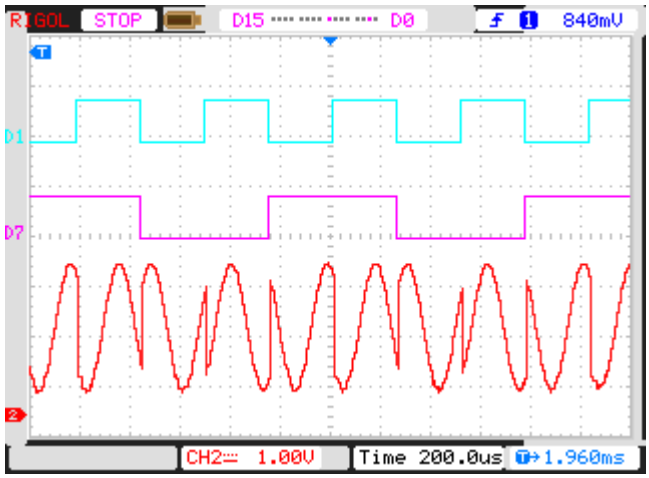 D1:TP3 D7:TP4 CH2:TP9

Scientech 2808

32 Bit	4 KHz	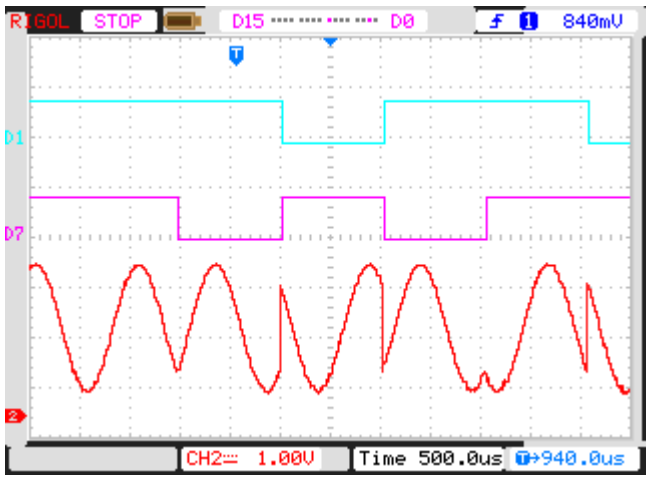 D1:TP3 D7:TP4 CH2:TP9
32 Bit	16 KHz	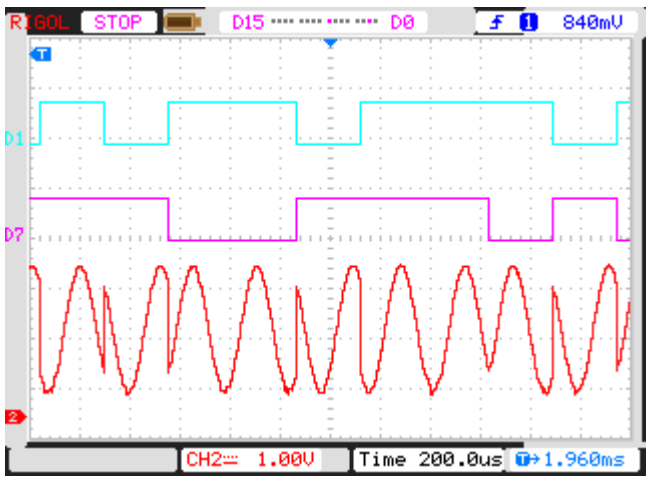 D1:TP3 D7:TP4 CH2:TP9

Experiment 6

Objective:

- Study and analysis of Complex Multiplier output.

Setup:

- TechBook Scientech 2808
- Power Supply
- Oscilloscope/DSO
- Test probe

Connection Diagram:

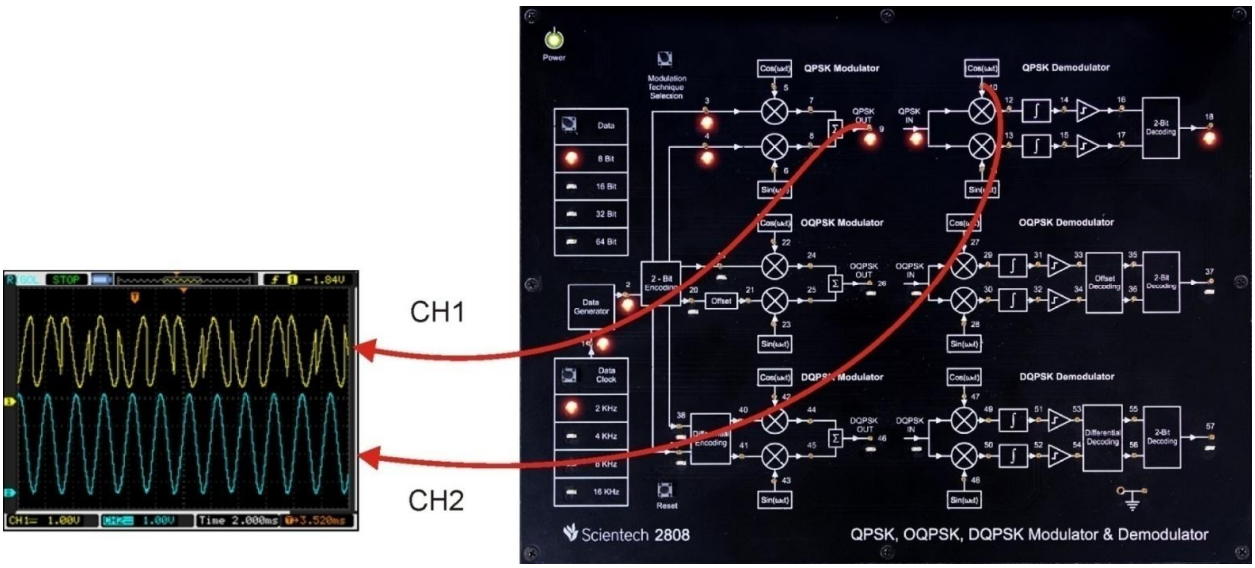

Procedure:

Step 1 : Connect and switch on the Power Supply of Scientech 2808

Step 2 : Quadrature Phase Shift Keying Modulator is selected by default and LEDs of corresponding technique will glow when user switch on the power.

Step 3 : Select *bit pattern* using push button i.e. 8 bit, 16 bit, 32 bit and 64 bit. And respective LED will glow. Observe the bit pattern on test point (TP2).

Step 4 : Select *data rate* using push button i.e. 2 KHz, 4 KHz, 8 KHz and 16 KHz. Observe the change in frequency on test point (TP1).

Scientech 2808

Observation:

- Observe the input bit pattern at TP2 by varying bit pattern using respective push button.
- Observe the data rate at TP1 by varying data rate using push button.
- Observe the 2-bit encoding i.e., I-Channel (TP3) and Q-Channel (TP4).
- Observe Carrier Signal i.e., Sine (TP6) and Cosine (TP5), Frequency of Carrier signal will change wrt data rate.
- Observe I-Channel (TP7) and Q-Channel (TP8) Modulated Signal.
- Observe QPSK Modulated Signal at TP9.
- Observe the multiplied Signal of QPSK and Carrier signal Cosine at TP12 & QPSK and carrier signal Sine at TP13.

Data Bit	Data Rate	DSO Results
8 Bit	2 KHz	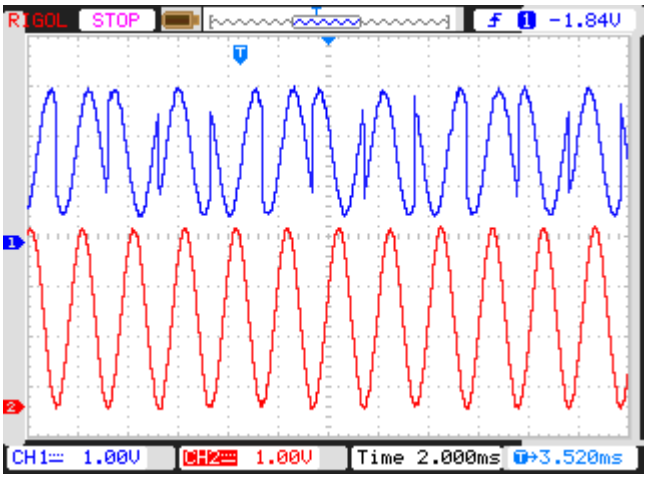 CH1: TP9 CH2: TP10
16 Bit	2 KHz	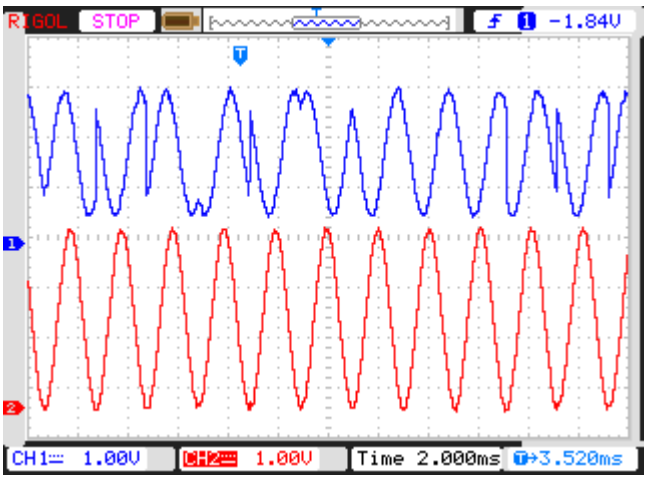 CH1: TP9 CH2: TP11

Scientech 2808

8 Bit	4 KHz	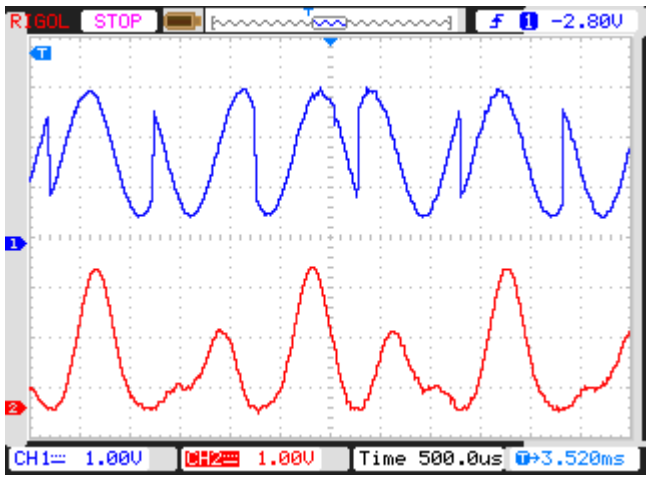 CH1: TP9 CH2: TP12
16 Bit	2 KHz	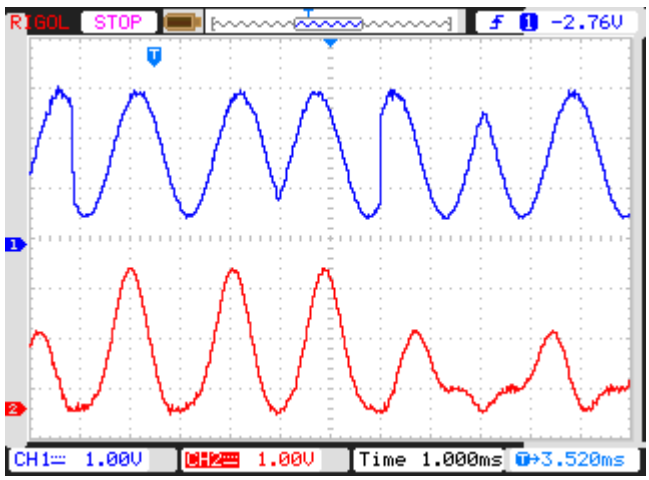 CH1: TP9 CH2: TP12
8 Bit	2 KHz	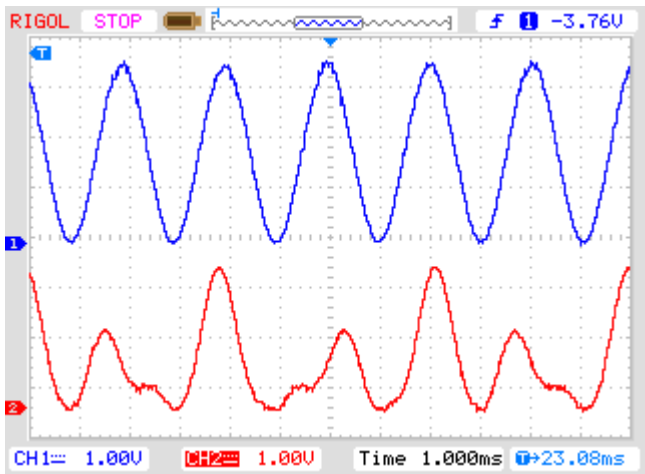 CH1: TP10 CH2: TP12

Scientech 2808

16 Bit	2 KHz	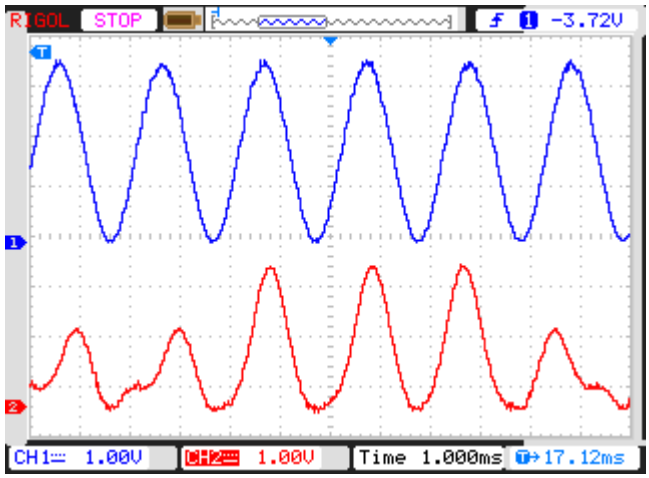 CH1: TP10 CH2: TP12
8 Bit	4 KHz	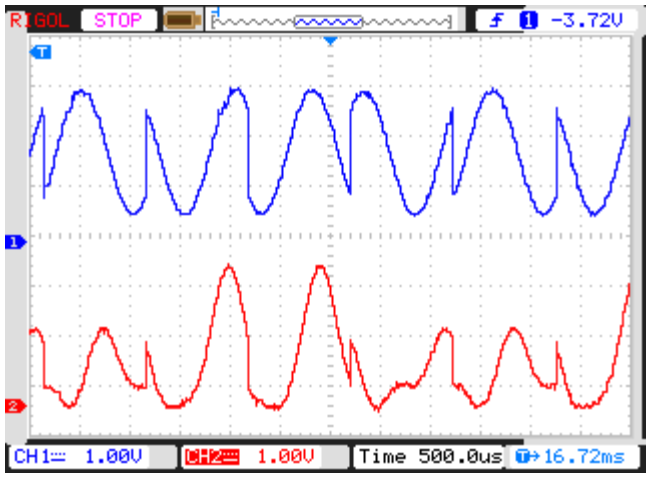 CH1: TP9 CH2: TP13
16 Bit	2 KHz	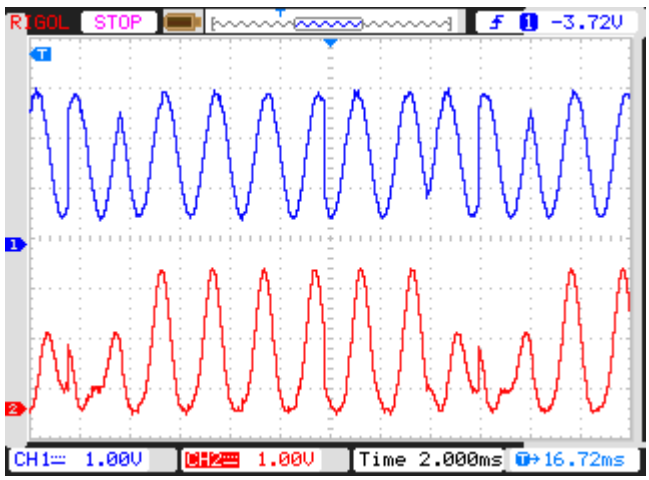 CH1: TP9 CH2: TP13

Scientech 2808

8 Bit	4 KHz	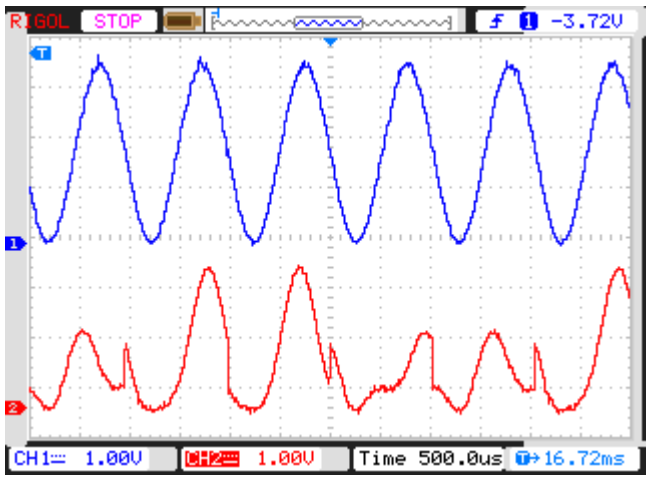 CH1: TP11 CH2: TP13
16 Bit	2 KHz	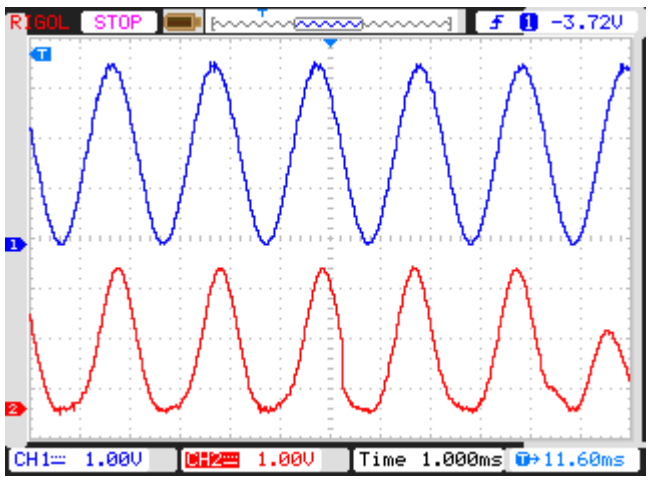 CH1: TP11 CH2: TP13

Experiment 7

Objective:

- Study and analysis of Integrator output.

Setup:

- TechBook Scientech 2808
- Power Supply
- Oscilloscope/DSO
- Test probe

Connection Diagram

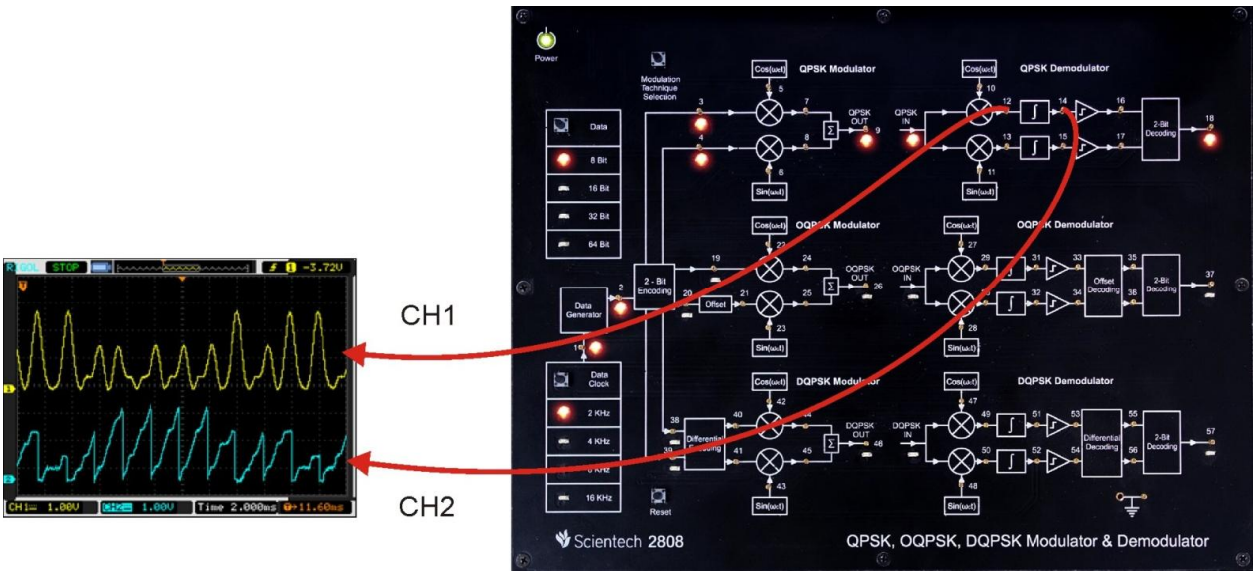

Procedure:

Step 1 : Connect and switch on the Power Supply of Scientech 2808

Step 2 : Quadrature Phase Shift Keying Modulator is selected by default and LEDs of corresponding technique will glow when user switch on the power.

Step 3 : Select *bit pattern* using push button i.e. 8 bit, 16 bit, 32 bit and 64 bit. And respective LED will glow. Observe the bit pattern on test point (TP2).

Step 4 : Select *data rate* using push button i.e. 2 KHz, 4 KHz, 8 KHz and 16 KHz. Observe the change in frequency on test point (TP1).

Scientech 2808

Observation:

- Observe the input bit pattern at TP2 by varying bit pattern using respective push button.
- Observe the data rate at TP1 by varying data rate using push button.
- Observe the 2-bit encoding i.e., I-Channel (TP3) and Q-Channel (TP4).
- Observe Carrier Signal i.e., Sine (TP6) and Cosine (TP5), Frequency of Carrier signal will change wrt data rate.
- Observe I-Channel (TP7) and Q-Channel (TP8) Modulated Signal.
- Observe QPSK Modulated Signal at TP9.
- Observe the multiplied Signal of QPSK and Carrier signal Cosine at TP12 & QPSK and carrier signal Sine at TP13.
- Observe the integrated output of I-Channel TP14 and Q-Channel TP15.

Data Bit	Data Rate	DSO Results
32 Bit	2 KHz	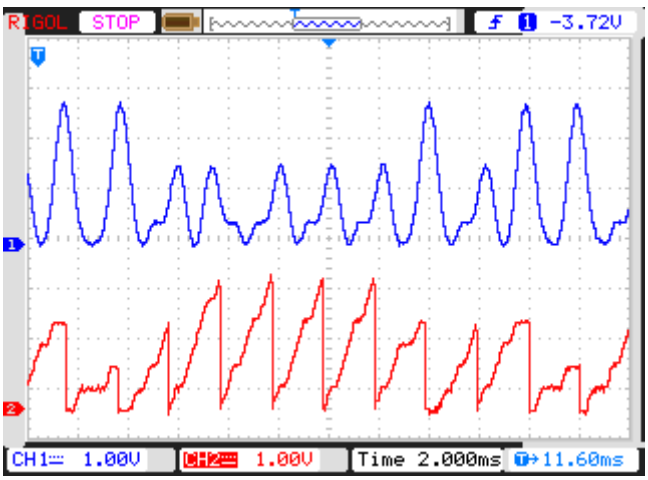 CH1: TP12 CH2: TP14
64 Bit	2 KHz	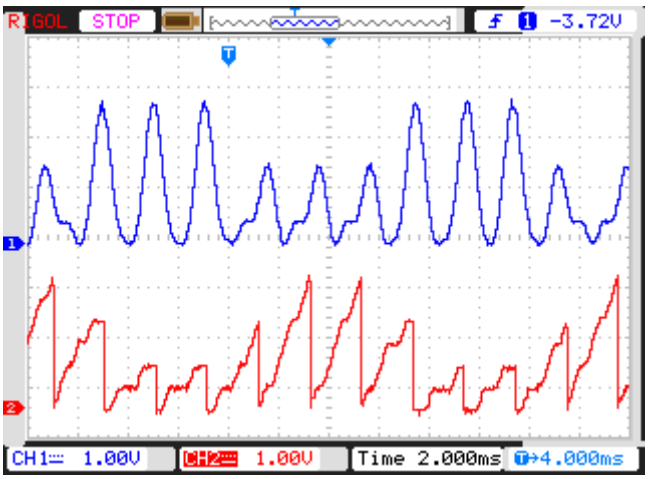 CH1: TP12 CH2: TP14

Scientech 2808

32 Bit	2 KHz	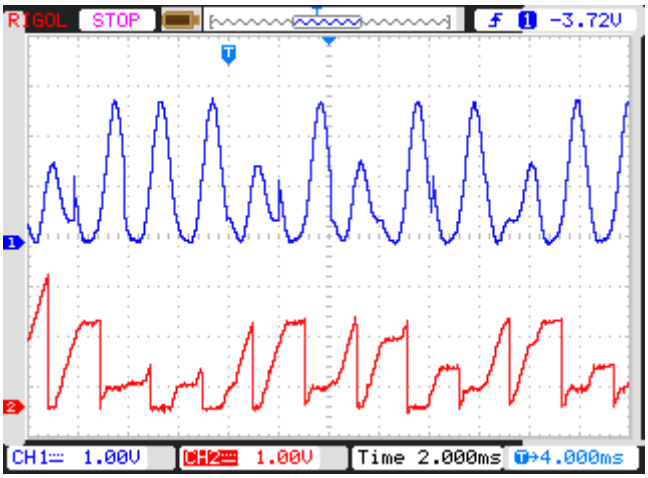 CH1: TP13 CH2: TP15
64 Bit	2 KHz	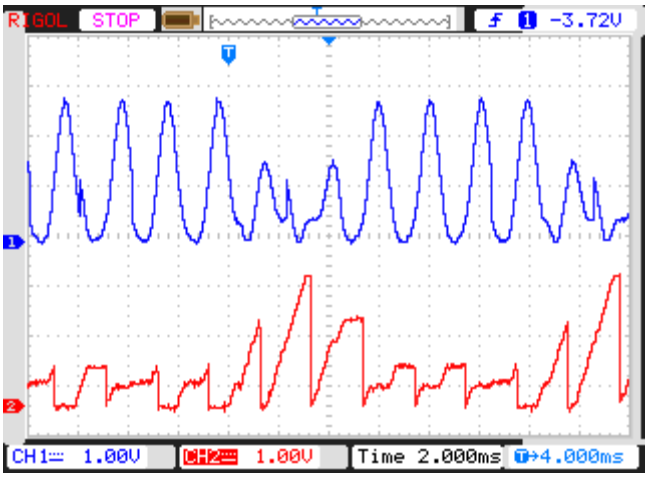 CH1: TP13 CH2: TP15

Experiment 8

Objective:

- Study and analysis of Comparator output.

Setup:

- TechBook Scientech 2808
- Power Supply
- Oscilloscope/DSO
- Test probe

Connection Diagram:

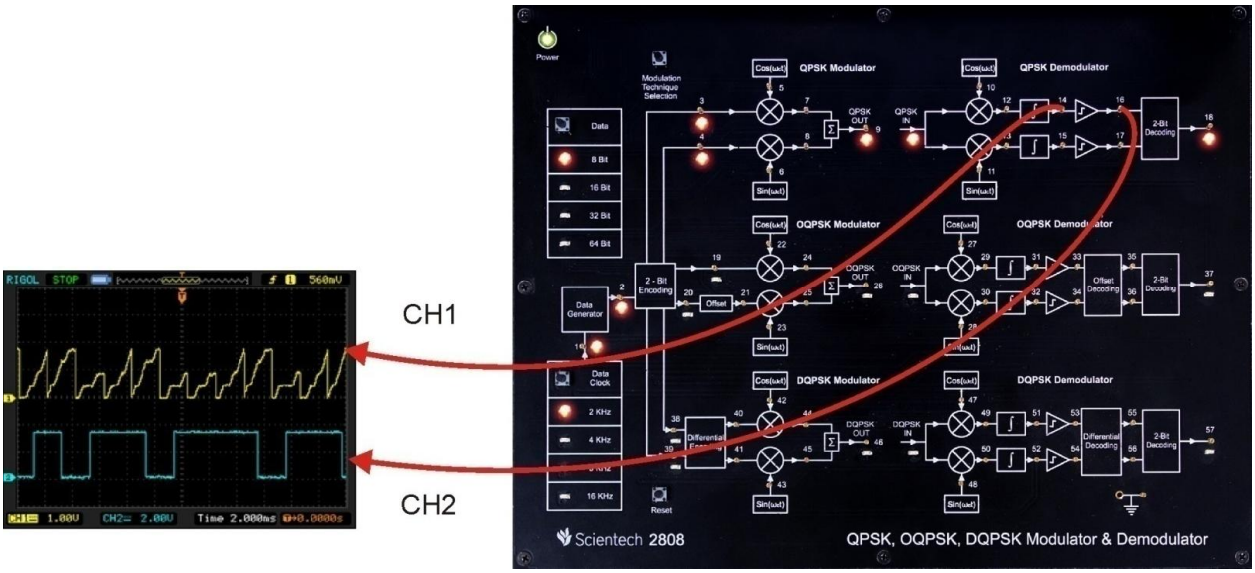

Procedure:

Step 1 : Connect and switch on the Power Supply of Scientech 2808

Step 2 : Quadrature Phase Shift Keying Modulator is selected by default and LEDs of corresponding technique will glow when user switch on the power.

Step 3 : Select *bit pattern* using push button i.e. 8 bit, 16 bit, 32 bit and 64 bit. And respective LED will glow. Observe the bit pattern on test point (TP2).

Step 4 : Select *data rate* using push button i.e. 2 KHz, 4 KHz, 8 KHz and 16 KHz. Observe the change in frequency on test point (TP1).

Observation:

- Observe the input bit pattern at TP2 by varying bit pattern using respective push button.
- Observe the data rate at TP1 by varying data rate using push button.
- Observe the 2-bit encoding i.e., I-Channel (TP3) and Q-Channel (TP4).
- Observe Carrier Signal i.e., Sine (TP6) and Cosine (TP5), Frequency of Carrier signal will change wrt data rate.
- Observe I-Channel (TP7) and Q-Channel (TP8) Modulated Signal.
- Observe QPSK Modulated Signal at TP9.
- Observe the multiplied Signal of QPSK and Carrier signal Cosine at TP12 & QPSK and carrier signal Sine at TP13.
- Observe the integrated output of I-Channel TP14 and Q-Channel TP15.
- Observe the comparator output of I-Channel at TP16 and Q-Channel TP17 that is same as at input with delay.

Data Bit	Data Rate	DSO Results
32 Bit	2 KHz	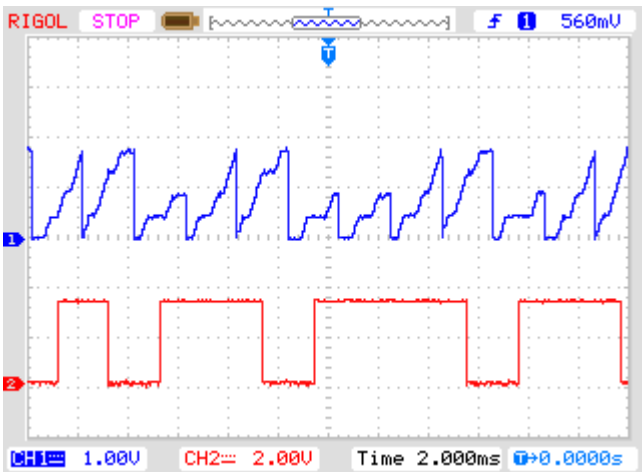 CH1: TP14 CH2: TP16

Scientech 2808

64 Bit	2 KHz	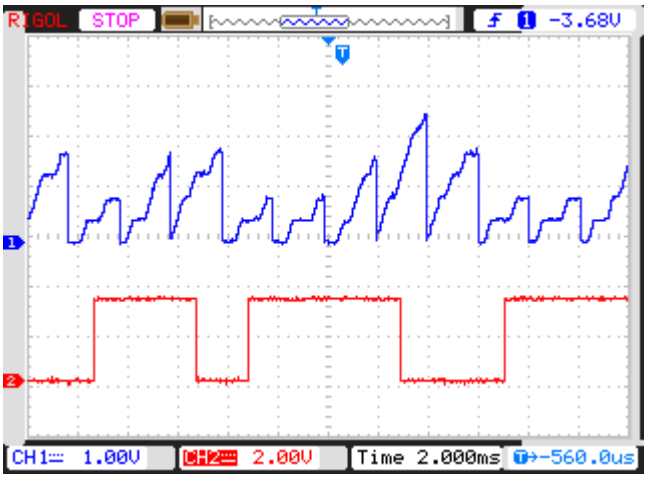 CH1: TP14 CH2: TP16
64 Bit	4 KHz	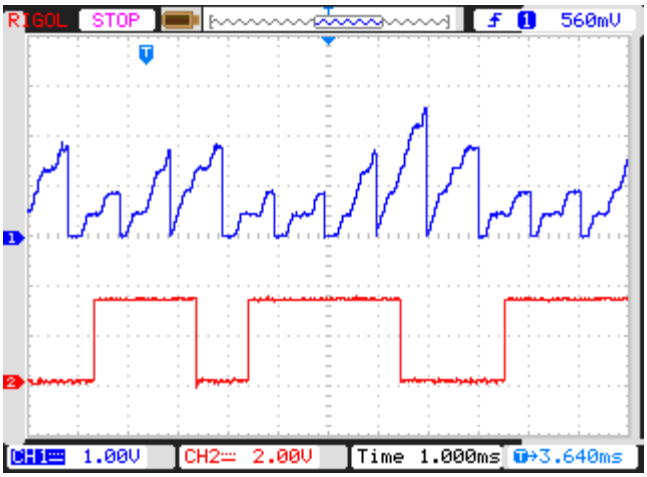 CH1: TP14 CH2: TP16
32 Bit	4 KHz	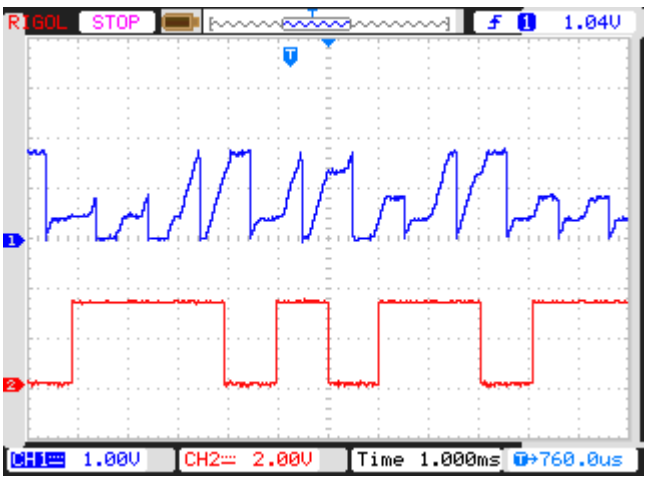 CH1: TP15 CH2: TP17

Scientech 2808

64 Bit	2 KHz	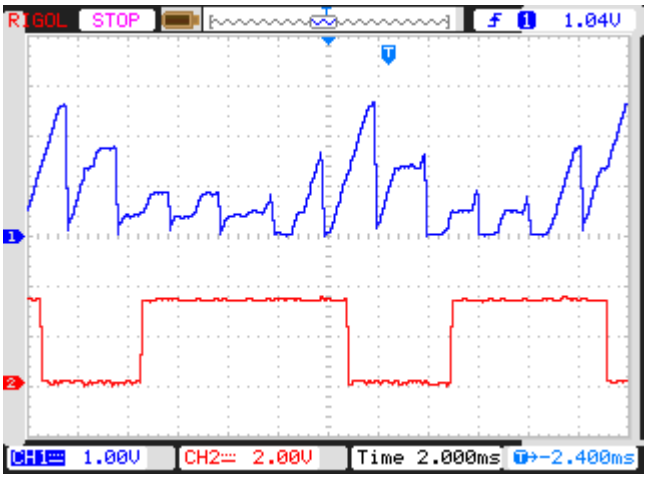 CH1: TP15 CH2: TP17
64 Bit	4 KHz	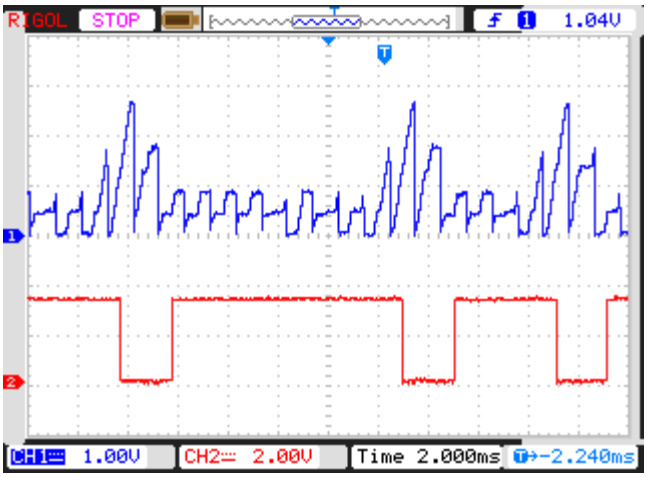 CH1: TP15 CH2: TP17
32 Bit	2 KHz	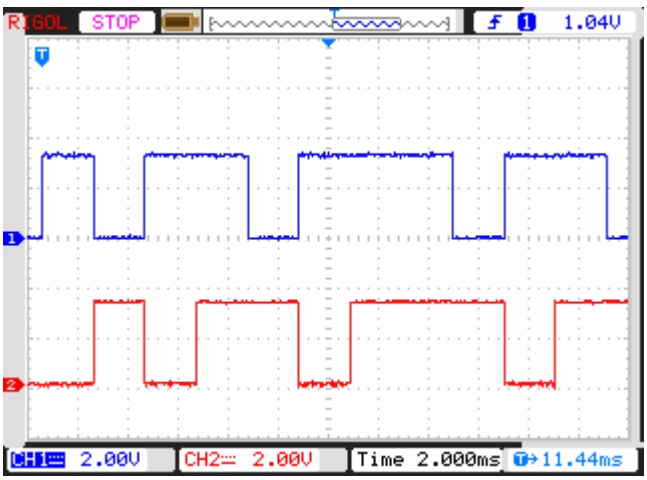 CH1: TP3 CH2: TP16

Scientech 2808

64 Bit	4 KHz	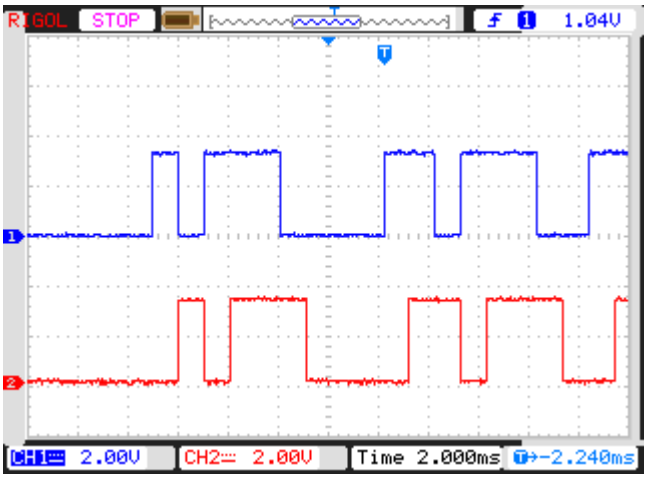 CH1: TP3 CH2: TP16
32 Bit	2 KHz	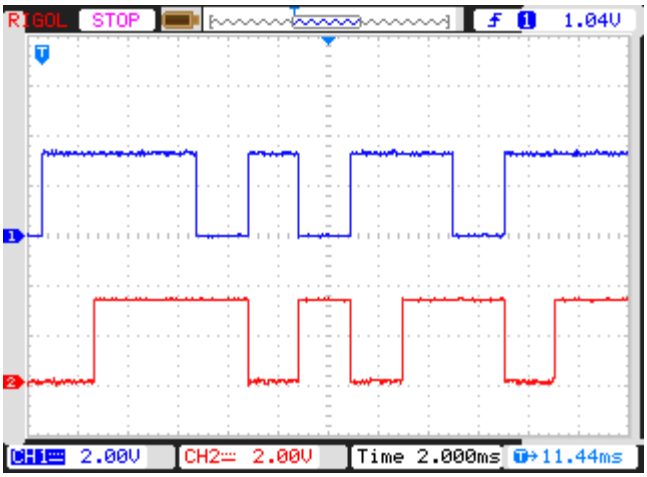 CH1: TP4 CH2: TP17
64 Bit	4 KHz	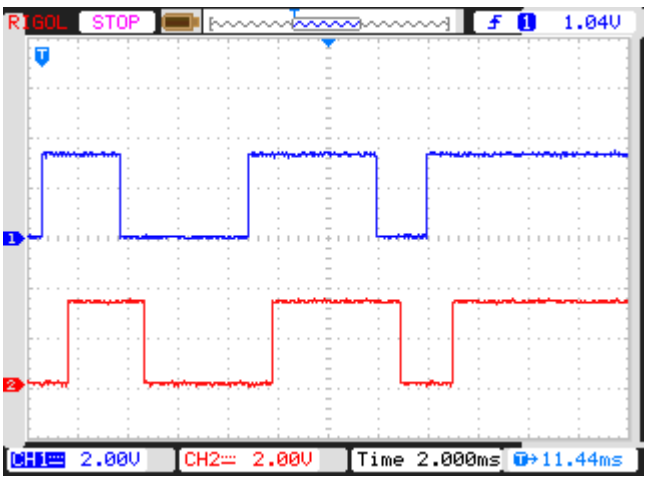 CH1: TP4 CH2: TP17

Experiment 9

Objective:

- Study and analysis of QPSK Demodulated Output.

Setup:

- TechBook Scientech 2808
- Power Supply
- Oscilloscope/DSO
- Test probe

Connection Diagram:

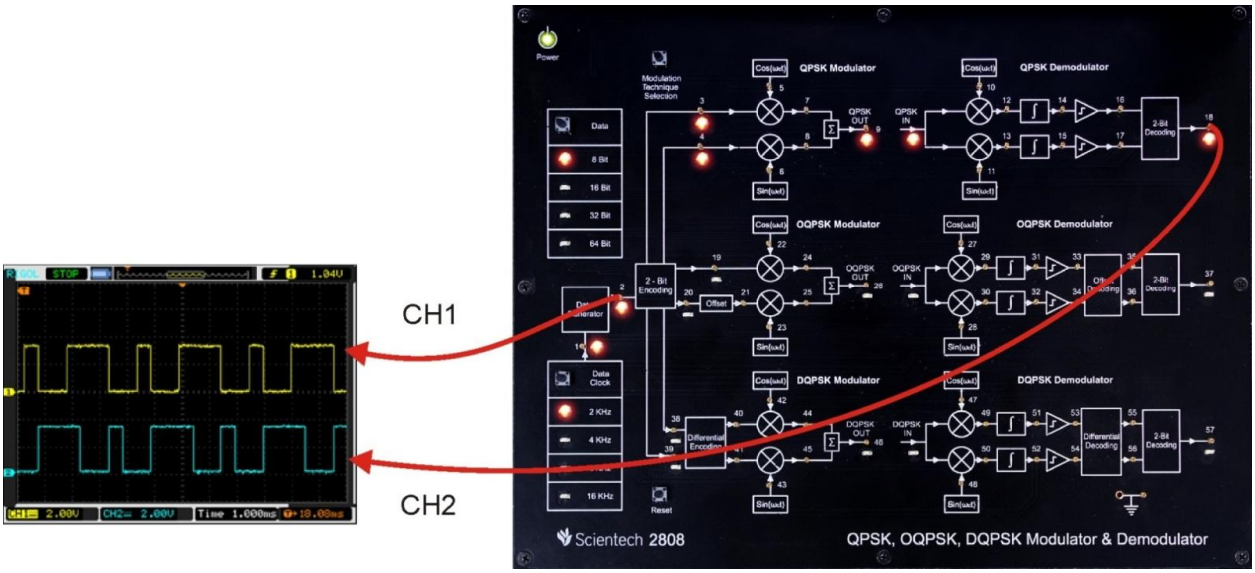

Procedure:

Step 1 : Connect and switch on the Power Supply of Scientech 2808

Step 2 : Quadrature Phase Shift Keying Modulator is selected by default and LEDs of corresponding technique will glow when user switch on the power.

Step 3 : Select *bit pattern* using push button i.e. 8 bit, 16 bit, 32 bit and 64 bit. And respective LED will glow. Observe the bit pattern on test point (TP2).

Step 4 : Select *data rate* using push button i.e. 2 KHz, 4KHz, 8 KHz and 16 KHz. Observe the change in frequency on test point (TP1).

Observation:

- Observe the input bit pattern at TP2 by varying bit pattern using respective push button.
- Observe the data rate at TP1 by varying data rate using push button.
- Observe the 2-bit encoding i.e., I-Channel (TP3) and Q-Channel (TP4).
- Observe Carrier Signal i.e., Sine (TP6) and Cosine (TP5), Frequency of Carrier signal will change wrt data rate.
- Observe I-Channel (TP7) and Q-Channel (TP8) Modulated Signal.
- Observe QPSK Modulated Signal at TP9.
- Observe the multiplied Signal of QPSK and Carrier signal Cosine at TP12 & QPSK and carrier signal Sine at TP13.
- Observe the integrated output of I-Channel TP14 and Q-Channel TP15.
- Observe the comparator output of I-Channel TP16 and Q-Channel TP17 that is same as at input with delay.
- Observe the QPSK Demodulated Signal at TP18.

Data Bit	Data Rate	DSO Results
8 Bit	4 KHz	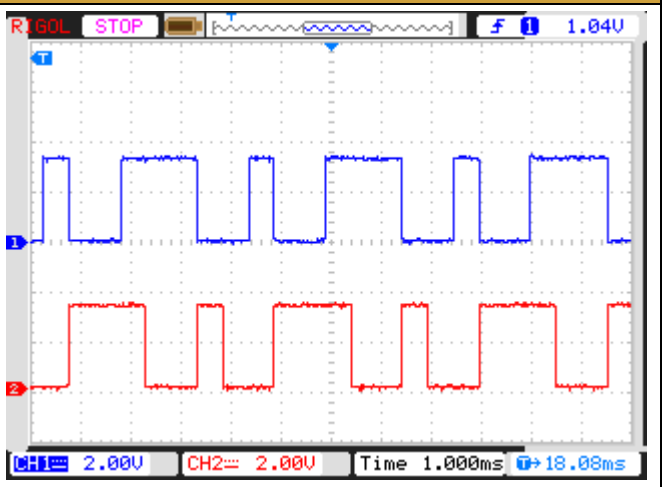 CH1: TP2 CH2: TP18

Scientech 2808

16 Bit	2 KHz	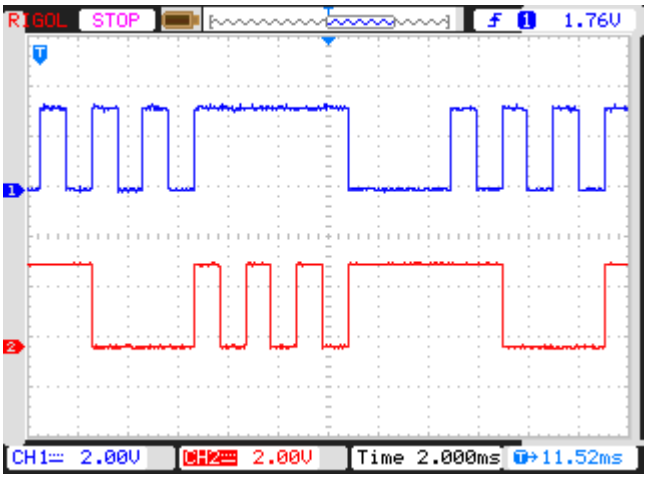 CH1: TP2 CH2: TP18
32 Bit	2 KHz	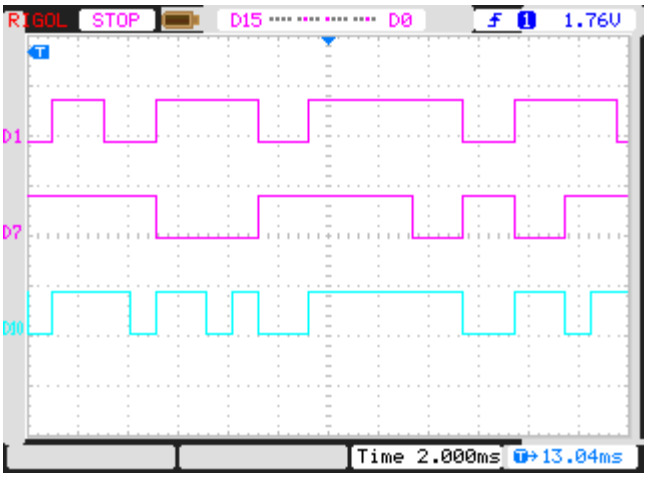 D1: TP16 D7: TP17 D10:18
64 Bit	4 KHz	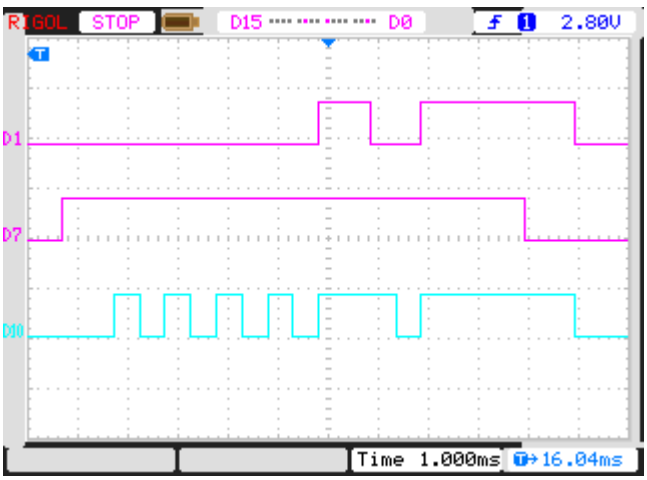 D1: TP16 D7: TP17 D10:TP18

Offset Quadrature Phase Shift Keying

Introduction:

What is Offset Quadrature Phase Shift Keying and how it works?

Offset Quadrature Phase-Shift Keying (OQPSK) is a modified form of QPSK where the bit waveforms on I or Q channel is offset or shifted in phase from each other by one-half of a bit times. It is sometimes called Staggered Quadrature Phase-Shift Keying (SQPSK). Taking four values of the phase (two bits) at a time to construct a QPSK symbol can allow the phase of the signal to jump by as much as 180° at a time. When the signal is low-pass filtered (as is typical in a transmitter), these phase-shifts result in large amplitude fluctuations, an undesirable quality in communication systems. By offsetting the timing of the odd or even bits by one bit-period, or half a symbol-period, the in-phase and quadrature components will never change at the same time. In the constellation diagram shown on the right, it can be seen that this will limit the phase-shift to no more than 90° at a time. This yields much lower amplitude fluctuations than non-offset QPSK and is sometimes preferred in practice.

The picture given below shows, the phase changes in OQPSK are never greater than 90°.

Offset Quadrature Phase Shift Keying Modulator:

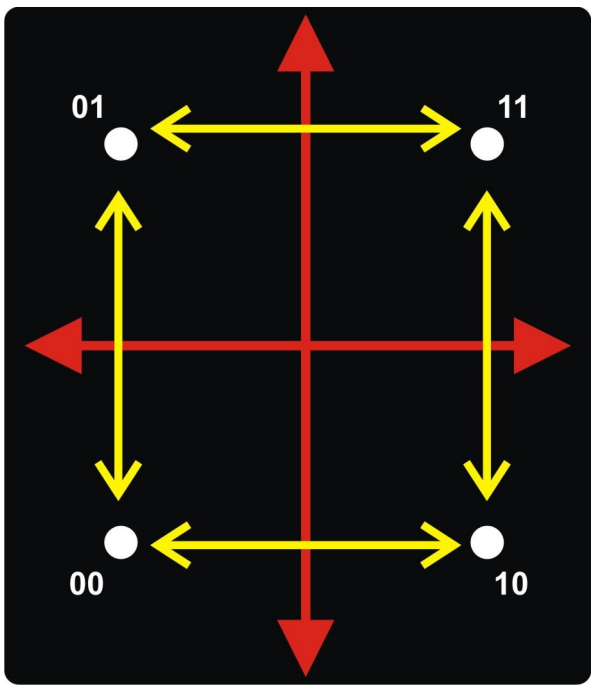

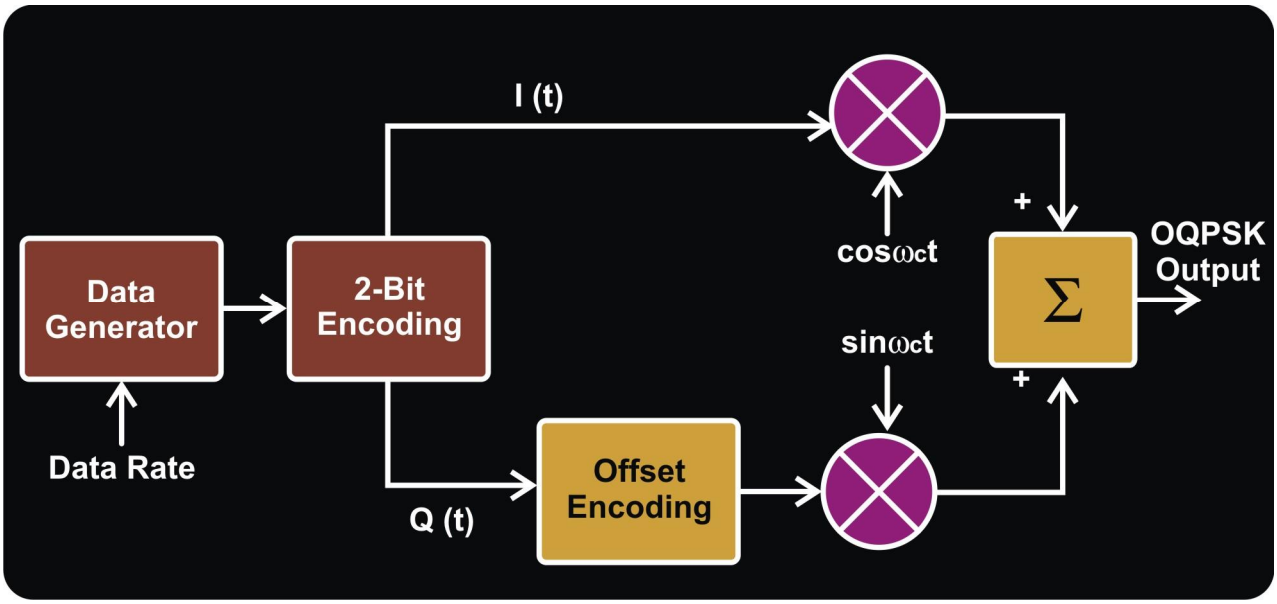

Offset Quadrature Phase Shift Keying Demodulator:

The incoming modulated signal is multiplied with the cosine and the sine signal generated from the NCO. The output of the multiplier contains high $(f_{in} + f_{nco})$ and low $(f_{in} - f_{nco})$ frequency components. Then integrator integrates the gain of signal and then with the help of comparator input signal is received on I and Q channel of demodulator. Then digital data go through the offset decoding, then this data form I and Q channel is given to parallel to serial converter to give original data.

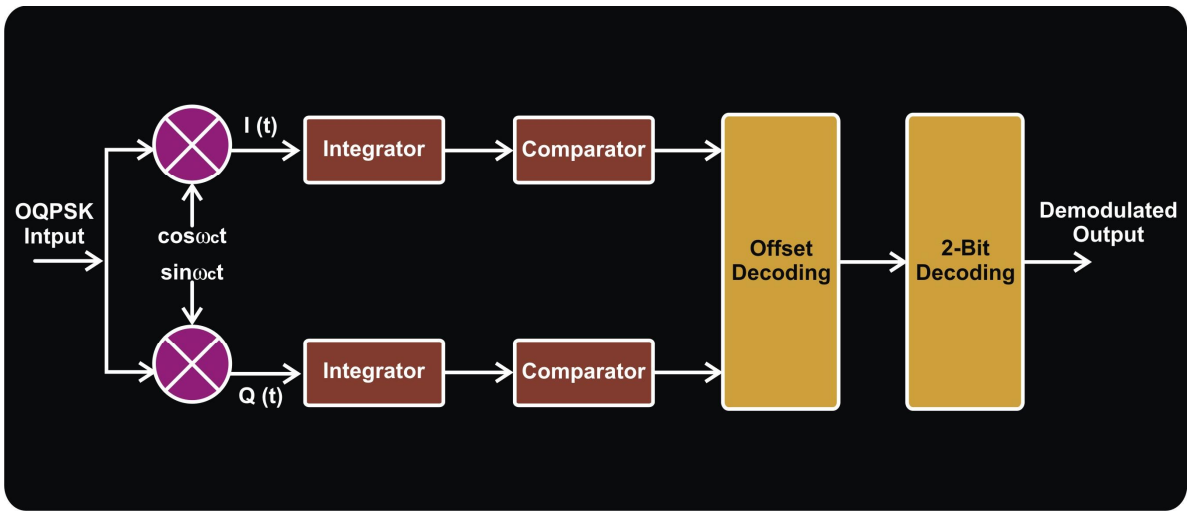

Advantages:

- Maximum phase change is $\pi/2$.
- The envelop is relatively remain constant.
- Power-efficient.
- Non-linear power amplification can be used without too much distortion in bandwidth

Disadvantage

- It is hard to demodulate by non-coherent method.
- OQPSK introduces a delay of half a symbol into the demodulation process. In other words, using OQPSK increases the temporal efficiency of normal QPSK. The reason is that the in phase and Quadrature Phase components of the OQPSK cannot be simultaneously zero. Hence, the range of the fluctuations in the signal is smaller.
- An additional disadvantage is that the quiescent power is nonzero, which may be a design issue in devices targeted for low power applications.

Applications:

- Digital Mobile Radio.

Experiment 10

Objective:

- Study and analysis of bit pattern generation.
  - 8 bit, 16 bit, 32 bit and 64 bit.
- Observe bit pattern generation at different data rate i.e.
  - 2 KHz, 4 KHz, 8 KHz and 16 KHz.

Setup:

- TechBook Scientech 2808
- Power Supply
- Oscilloscope/DSO
- Test probe

Connection Diagram:

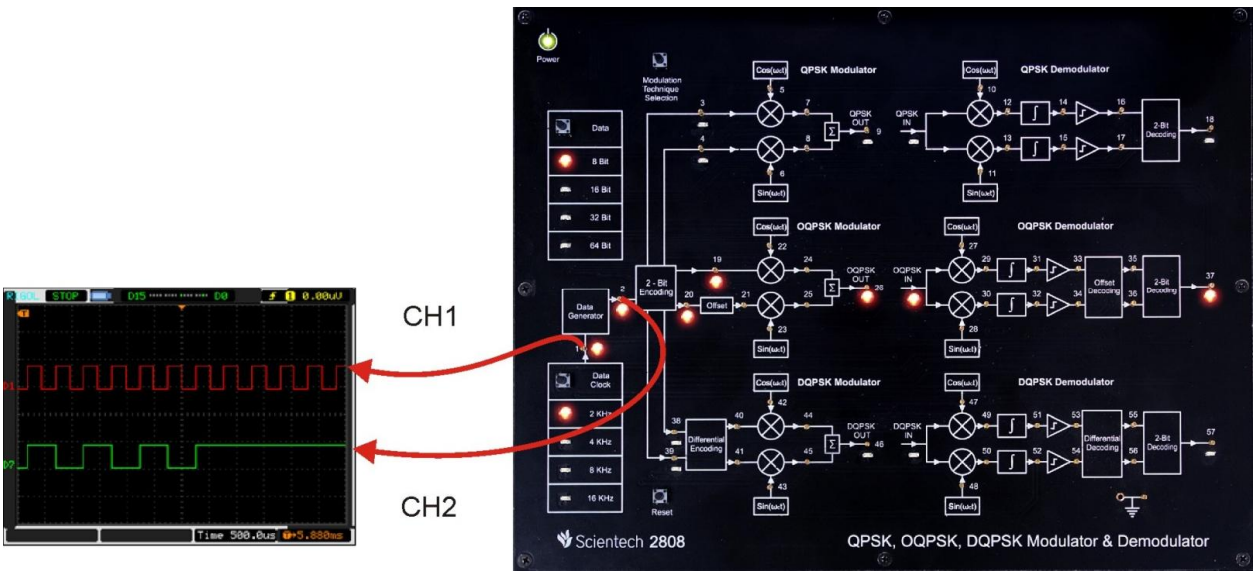

Procedure:

Step 1 : Connect and switch on the Power Supply of Scientech 2808.

Step 2 : Select Offset Quadrature Phase Shift Keying Modulator using push button and LEDs of corresponding technique will glow.

Step 3 : Select *bit pattern* using push button i.e. 8 bit, 16 bit, 32 bit and 64 bit. And respective LED will glow. Observe the bit pattern on test point (TP2).

Step 4 : Select *data rate* using push button i.e. 2 KHz, 4KHz, 8 KHz and 16 KHz. Observe the change in frequency on test point (TP1).

Scientech 2808

Observation:

- Observe the input bit pattern at TP2 by varying bit pattern using respective push button.
- Observe the data rate at TP1 by varying data rate using push button.

Data Bit	Data Rate	DSO Results
16 Bit	4 KHz	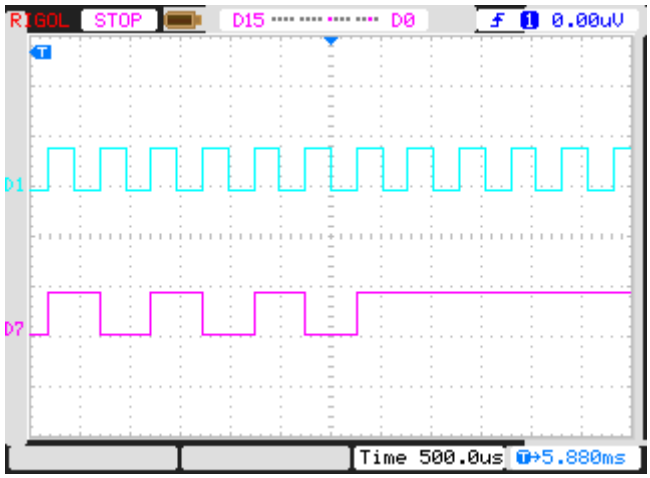 D1: TP1 D7: TP2
32 Bit	2 KHz	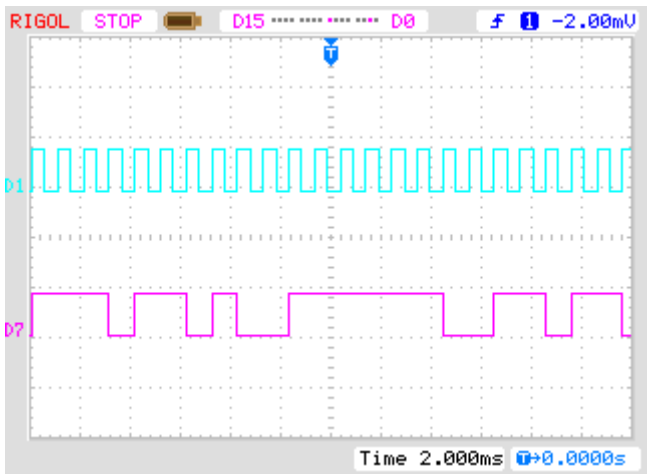 D1: TP1 D7: TP2

Scientech 2808

64 Bit	8 KHz	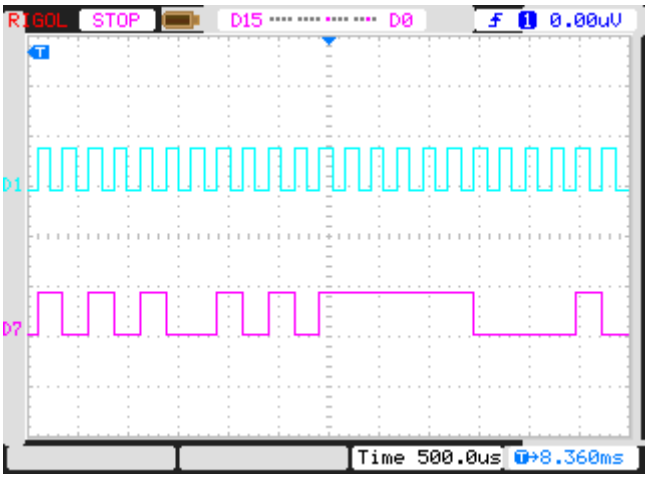 D1: TP1 D7: TP2

Experiment 11

Objective:

- Study and analysis of 2-bit encoding.
  - I-Channel
  - Q-Channel

Setup:

- TechBook Scientech 2808
- Power Supply
- Oscilloscope/DSO
- Test probe

Connection Diagram:

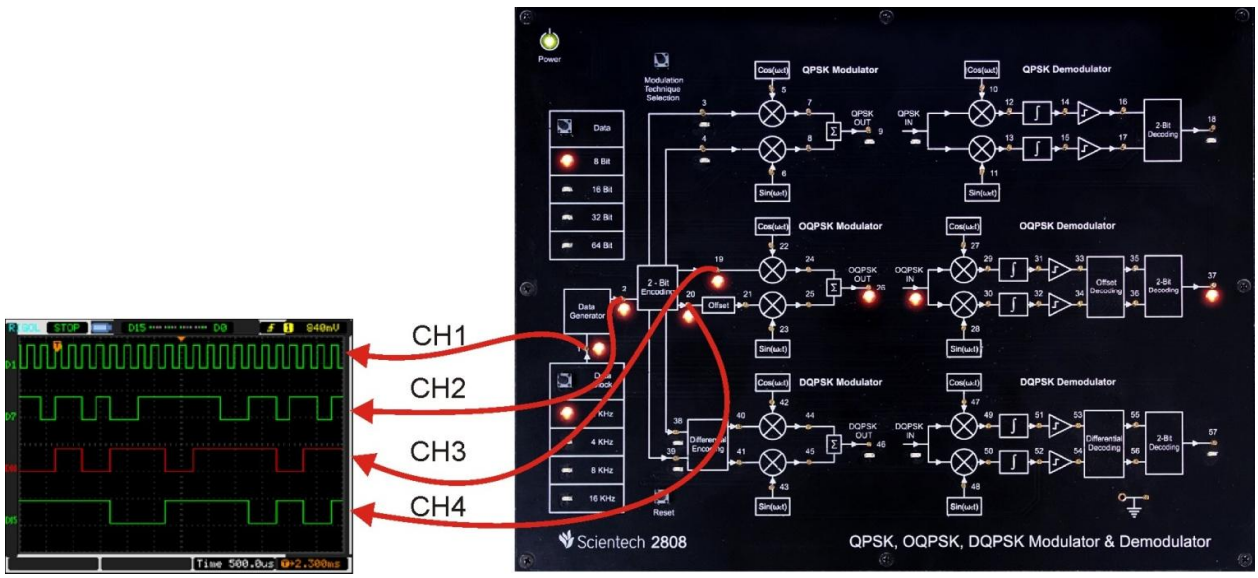

Procedure:

Step 1 : Connect and switch on the Power Supply of Scientech 2808

Step 2 : Select Offset Quadrature Phase Shift Keying Modulator using push button and LEDs of corresponding technique will glow.

Step 3 : Select *bit pattern* using push button i.e. 8 bit, 16 bit, 32 bit and 64 bit. And respective LED will glow. Observe the bit pattern on test point (TP2).

Step 4 : Select *data rate* using push button i.e. 2 KHz, 4KHz, 8 KHz and 16 KHz. Observe the change in frequency on test point (TP1).

Step 5 : Observe the 2-bit encoding i.e., I-Channel (TP19) and Q-Channel (TP20).

Observation:

- Observe the input bit pattern at TP2 by varying bit pattern using respective push button.
- Observe the data rate at TP1 by varying data rate using push button.
- Observe the I-Channel (TP19) and Q-Channel (TP20).

Data Bit	Data Rate	DSO Results
16 Bit	4 KHz	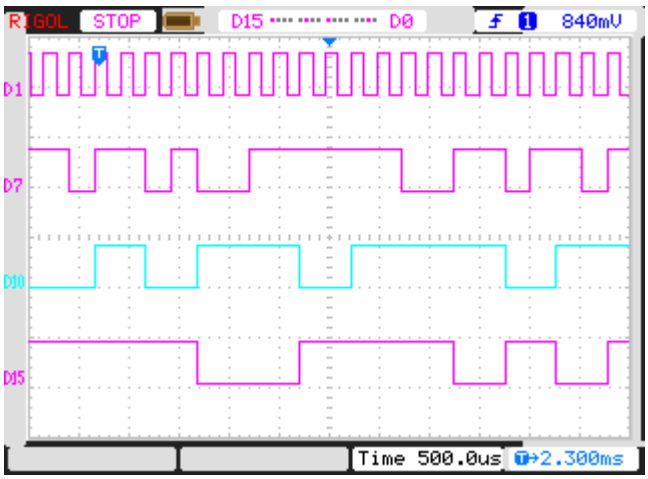 D1: TP1 D7: TP2 D10:TP19 D15: TP20

Scientech 2808

32 Bit	2 KHz	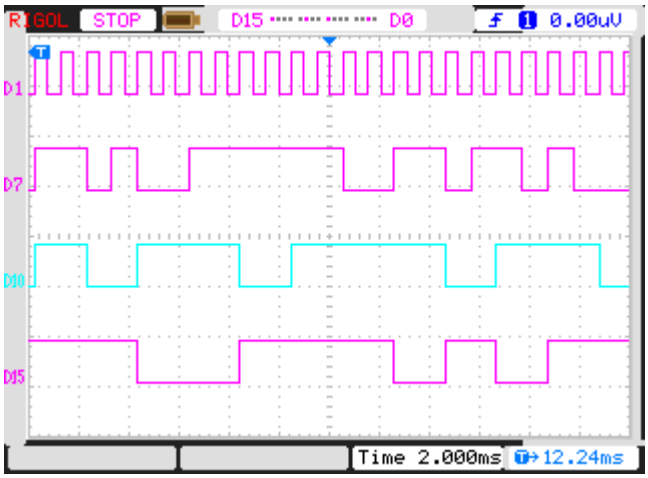 D1: TP1 D7: TP2 D10:TP19 D15: TP20
64 Bit	8 KHz	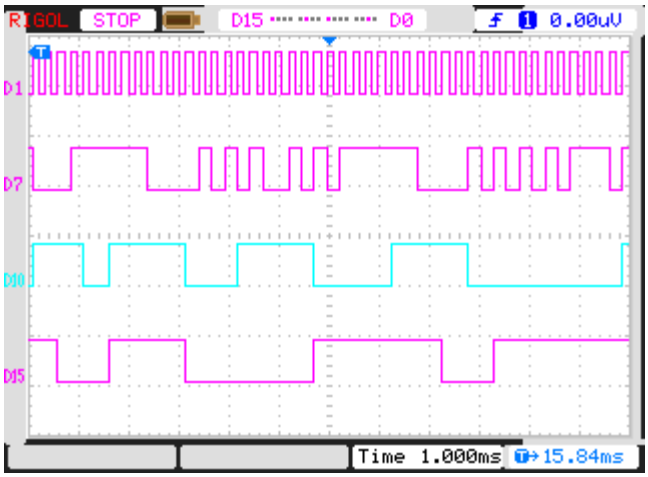 D1: TP1 D7: TP2 D10:TP19 D15: TP20

Experiment 12

Objective:

- Study and analysis of offset encoding of Q-Channel.

Setup:

- TechBook Scientech 2808
- Power Supply
- Oscilloscope/DSO
- Test probe

Connection Diagram:

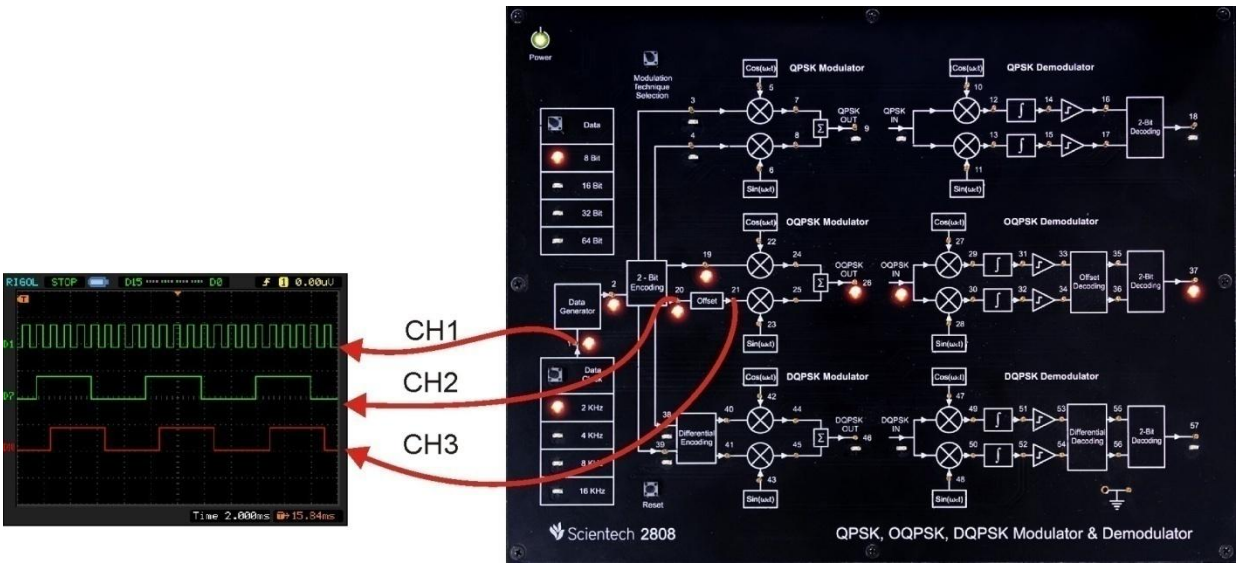

Procedure:

Step 1 : Connect and switch on the Power Supply of Scientech 2808

Step 2 : Select Offset Quadrature Phase Shift Keying Modulator using push button and LEDs of corresponding technique will glow.

Step 3 : Select *bit pattern* using push button i.e. 8 bit, 16 bit, 32 bit and 64 bit. And respective LED will glow. Observe the bit pattern on test point (TP2).

Step 4 : Select *data rate* using push button i.e. 2 KHz, 4KHz, 8 KHz and 16 KHz. Observe the change in frequency on test point (TP1).

Step 5 : Observe the 2-bit encoding i.e., I-Channel (TP19) and Q-Channel (TP20).

Observation:

- Observe the input bit pattern at TP2 by varying bit pattern using respective push button.
- Observe the data rate at TP1 by varying data rate using push button.
- Observe the I-Channel (TP19) and Q-Channel (TP20).
- Observe the offset output of Q-Channel TP21.

Data Bit	Data Rate	DSO Results
8 Bit	2 KHz	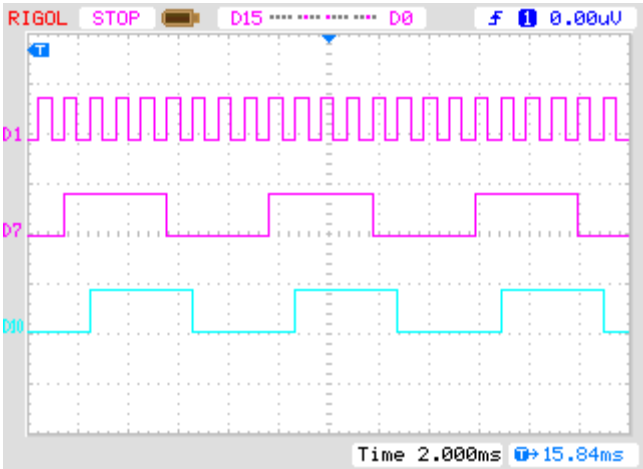 D1: TP1 D7: TP20 D10:TP21
32 Bit	4 KHz	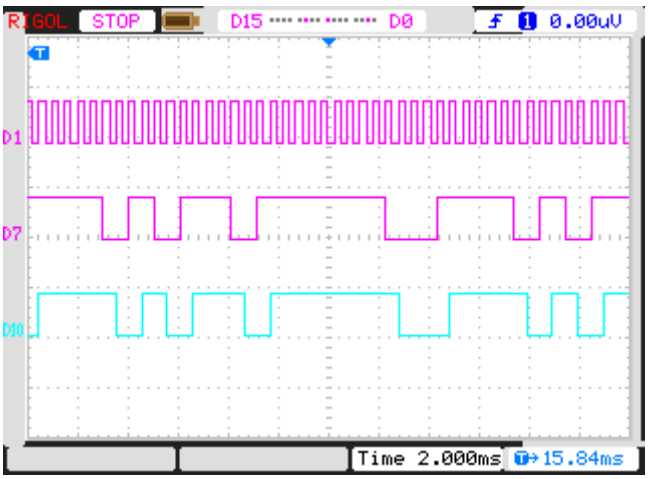 D1: TP1 D7: TP20 D10:TP21

Experiment 13

Objective:

- Study and analysis of carrier Signal.
  - Cosine
  - Sine

Setup:

- TechBook Scientech 2808
- Power Supply
- Oscilloscope/DSO
- Test probe

Connection Diagram:

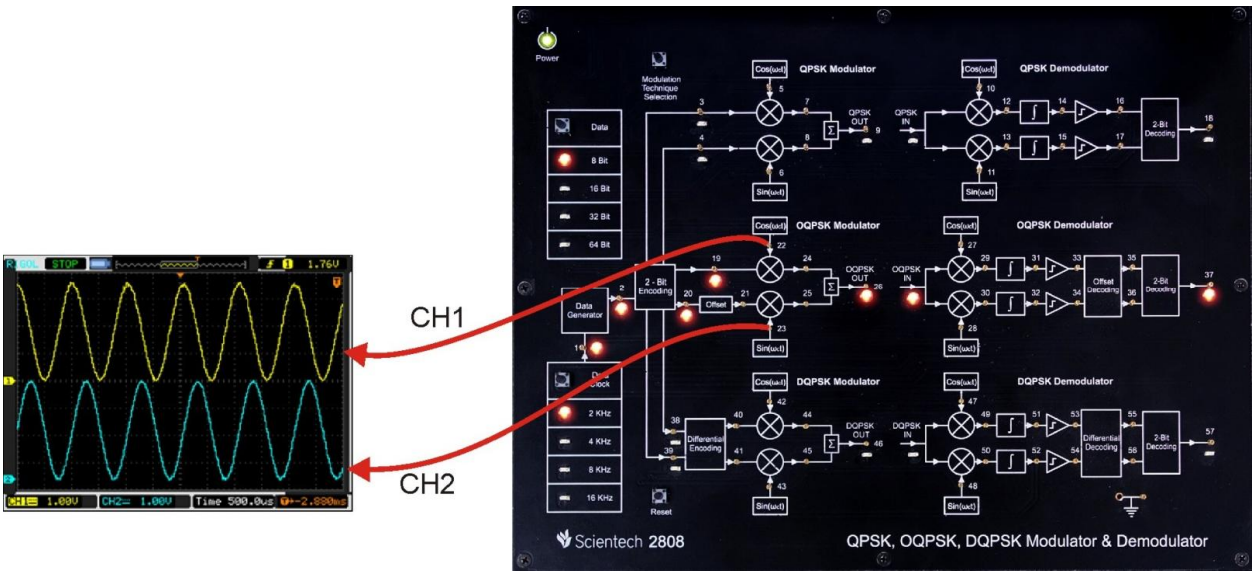

Procedure:

Step 1 : Connect and switch on the Power Supply of Scientech 2808

Step 2 : Select Offset Quadrature Phase Shift Keying Modulator using push button and LEDs of corresponding technique will glow.

Step 3 : Select *bit pattern* using push button i.e. 8 bit, 16 bit, 32 bit and 64 bit. And respective LED will glow. Observe the bit pattern on test point (TP2).

Step 4 : Select *data rate* using push button i.e. 2 KHz, 4KHz, 8 KHz and 16 KHz. Observe the change in frequency on test point (TP1).

Step 5 : Observe the 2-bit encoding i.e., I-Channel (TP19) and Q-Channel (TP20).

Step 6 : Observe Carrier Signal i.e., Sine (TP23) and Cosine (TP22), Frequency of Carrier signal will change wrt data rate.

Observation:

- Observe the input bit pattern at TP2 by varying bit pattern using respective push button.
- Observe the data rate at TP1 by varying data rate using push button.
- Observe the I-Channel (TP19) and Q-Channel (TP20).
- Observe the offset output of Q-Channel TP21.
- Observe Carrier Signal i.e., Sine (TP23) and Cosine (TP22).

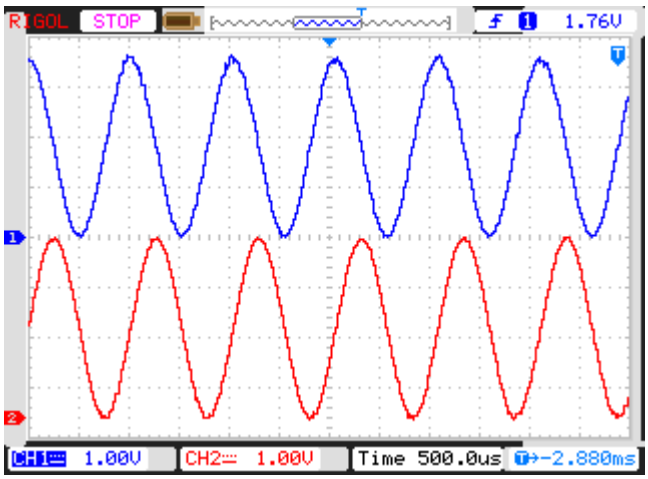

CH1: TP22 CH2: TP23

Experiment 14

Objective:

- Study and analysis of I-Channel and Q-Channel Modulation.

Setup:

- TechBook Scientech 2808
- Power Supply
- Oscilloscope/DSO
- Test probe

Connection Diagram:

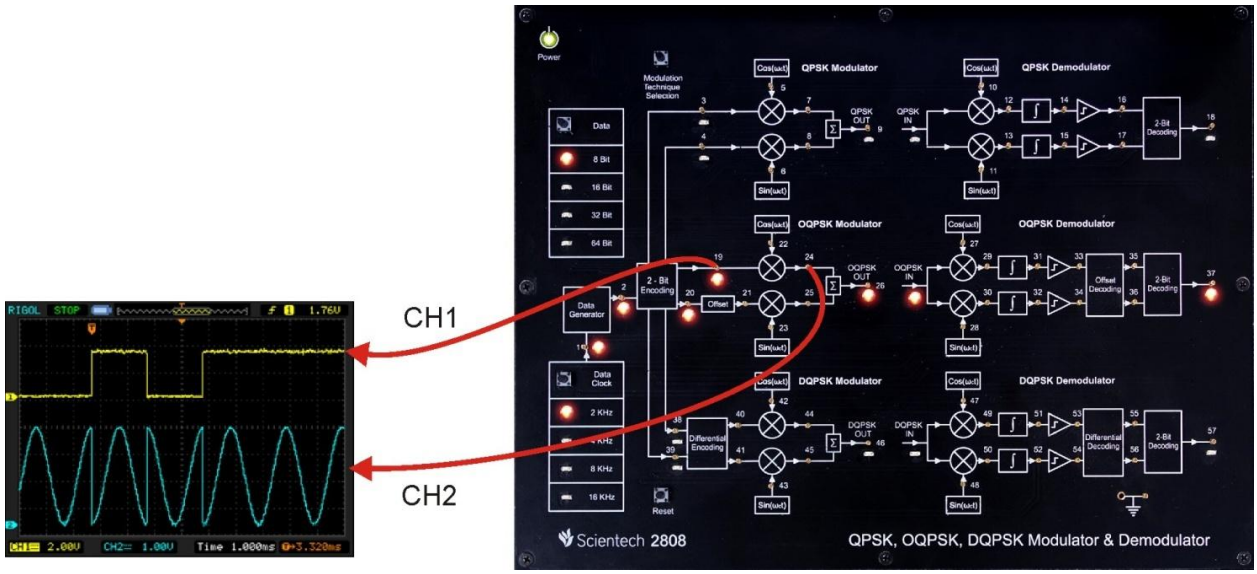

Procedure:

Step 1 : Connect and switch on the Power Supply of Scientech 2808

Step 2 : Select Offset Quadrature Phase Shift Keying Modulator using push button and LEDs of corresponding technique will glow.

Step 3 : Select *bit pattern* using push button i.e. 8 bit, 16 bit, 32 bit and 64 bit. And respective LED will glow. Observe the bit pattern on test point (TP2).

Step 4 : Select *data rate* using push button i.e. 2 KHz, 4 KHz, 8 KHz and 16 KHz. Observe the change in frequency on test point (TP1).

Step 5 : Observe the 2-bit encoding i.e., I-Channel (TP19) and Q-Channel (TP20).

Step 6 : Observe Carrier Signal i.e., Sine (TP23) and Cosine (TP22), Frequency of Carrier signal will change wrt data rate.

Scientech 2808

Observation:

- Observe the input bit pattern at TP2 by varying bit pattern using respective push button.
- Observe the data rate at TP1 by varying data rate using push button.
- Observe the I-Channel (TP19) and Q-Channel (TP20).
- Observe the offset output of Q-Channel TP21.
- Observe Carrier Signal i.e., Sine (TP23) and Cosine (TP22).
- Observe I-Channel (TP24) and Q-Channel (TP25) Modulated Signal.

Data Bit	Data Rate	DSO Results
32 Bit	4 KHz	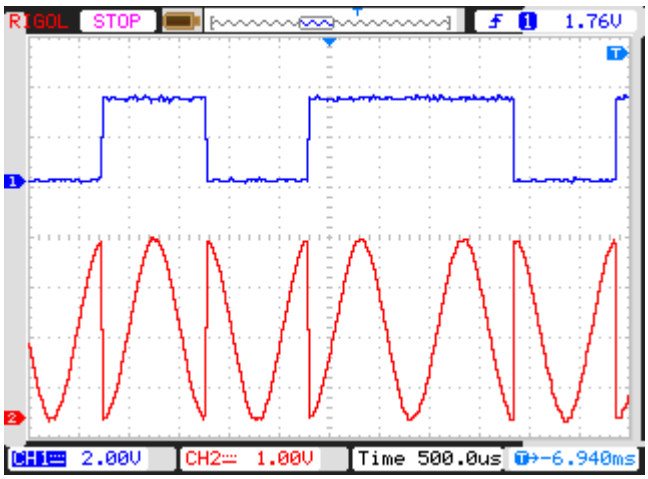 CH1: TP19 CH2: TP24
64 Bit	2 KHz	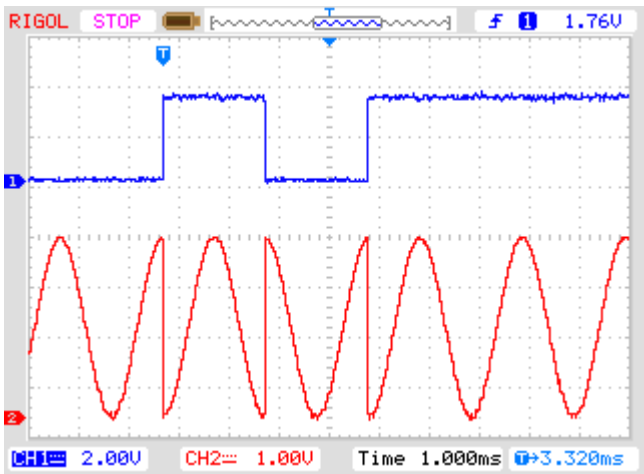 CH1: TP19 CH2: TP24

Scientech 2808

8 Bit	8 KHz	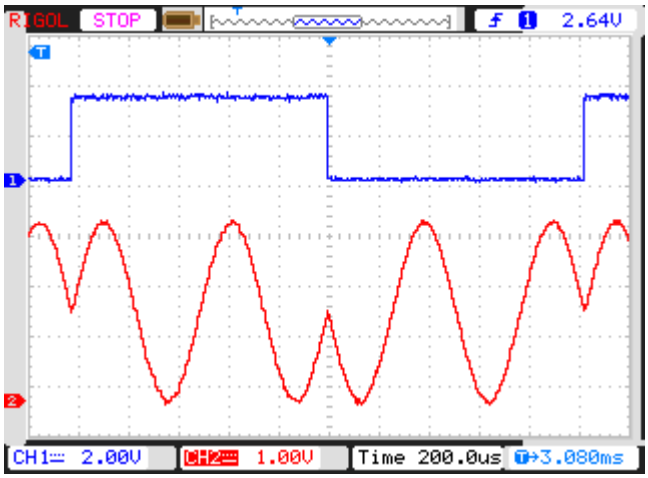 CH1: TP21 CH2: TP25
32 Bit	4 KHz	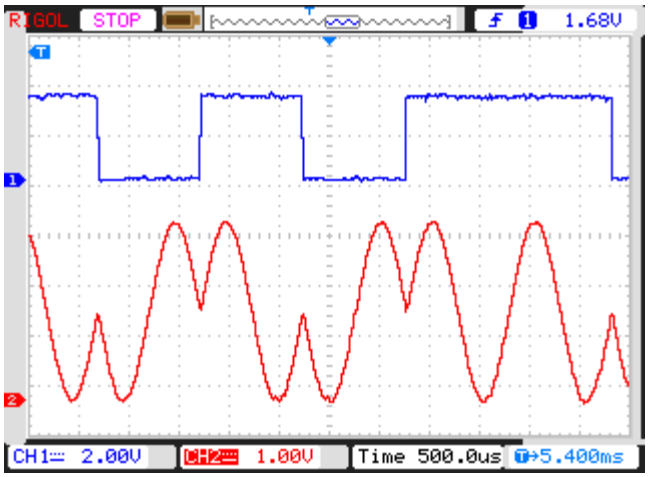 CH1: TP21 CH2: TP25
64 Bit	2 KHz	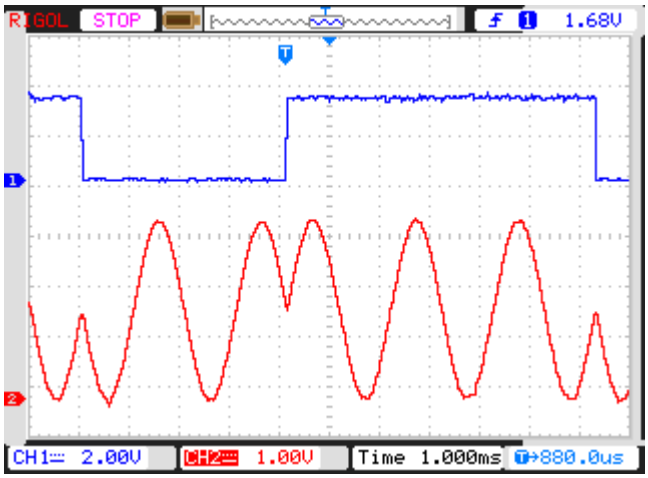 CH1: TP21 CH2: TP25

Experiment 15

Objective:

- Study and analysis of OQPSK Modulation.

Setup:

- TechBook Scientech 2808
- Power Supply
- Oscilloscope/DSO
- Test probe

Connection Diagram:

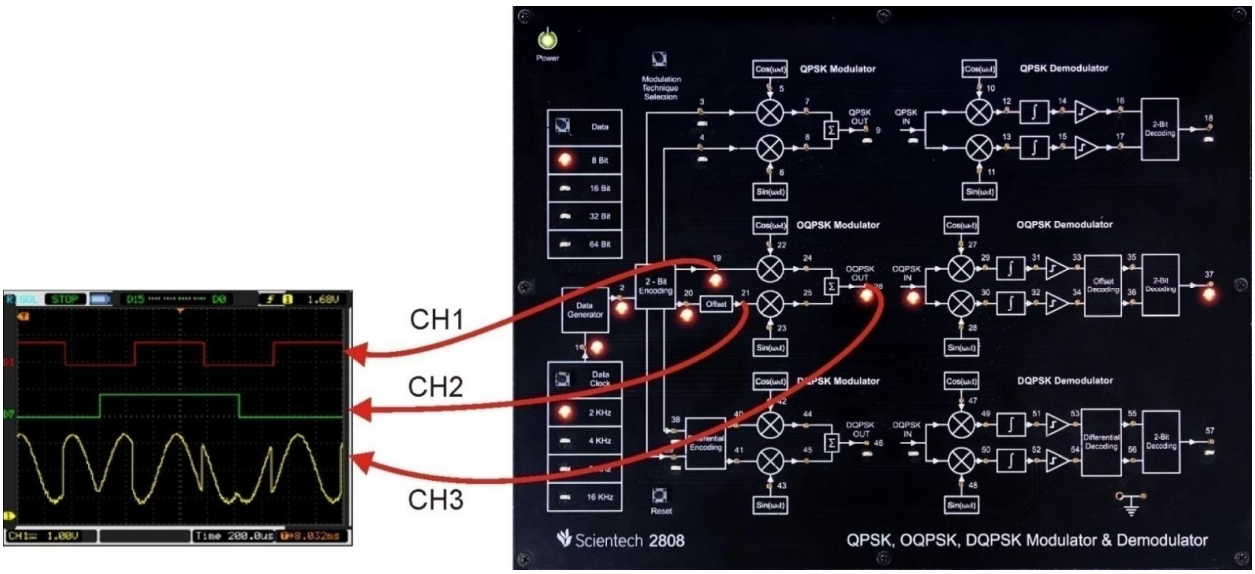

Procedure:

Step 1 : Connect and switch on the Power Supply of Scientech 2808

Step 2 : Select Offset Quadrature Phase Shift Keying Modulator using push button and LEDs of corresponding technique will glow.

Step 3 : Select *bit pattern* using push button i.e. 8 bit, 16 bit, 32 bit and 64 bit. And respective LED will glow. Observe the bit pattern on test point (TP2).

Step 4 : Select *data rate* using push button i.e. 2 KHz, 4 KHz, 8 KHz and 16 KHz. Observe the change in frequency on test point (TP1).

Step 5 : Observe the 2-bit encoding i.e., I-Channel (TP19) and Q-Channel (TP20).

Step 6 : Observe Carrier Signal i.e., Sine (TP23) and Cosine (TP22), Frequency of Carrier signal will change wrt data rate.

Observation:

- Observe the input bit pattern at TP2 by varying bit pattern using respective push button.
- Observe the data rate at TP1 by varying data rate using push button.
- Observe the I-Channel (TP19) and Q-Channel (TP20).
- Observe the offset output of Q-Channel TP21.
- Observe Carrier Signal i.e., Sine (TP23) and Cosine (TP22).
- Observe I-Channel (TP24) and Q-Channel (TP25) Modulated Signal.
- Observe OQPSK Modulated Signal at TP26.

Data Bit	Data Rate	DSO Results
8 Bit	8 KHz	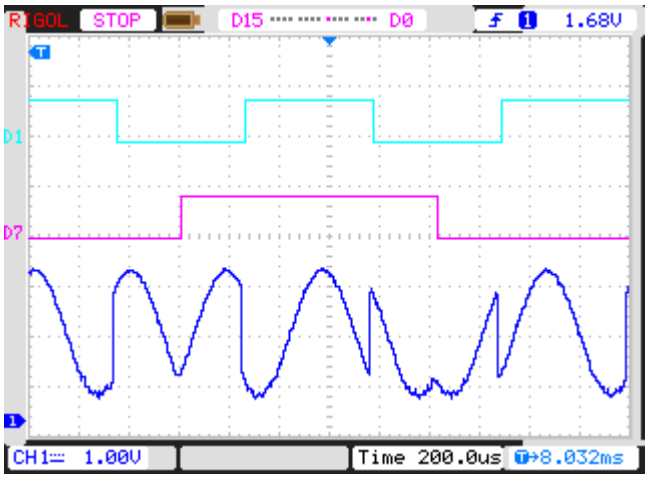 D1: TP19 D7: TP21 CH2: TP20
32 Bit	4 KHz	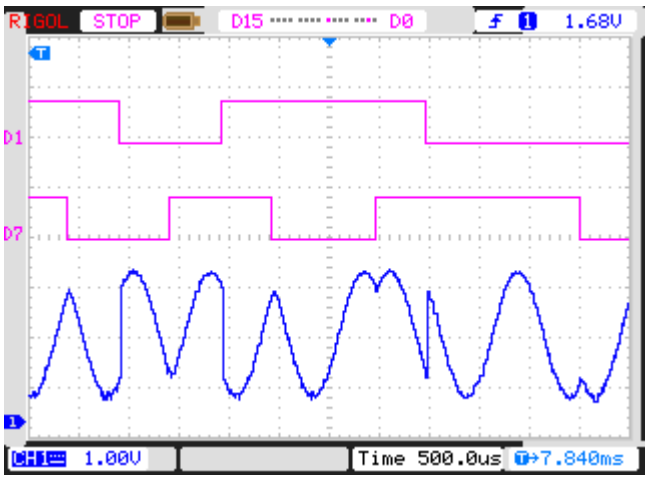 D1: TP19 D7: TP21 CH2: TP20

Scientech 2808

64 Bit	2 KHz	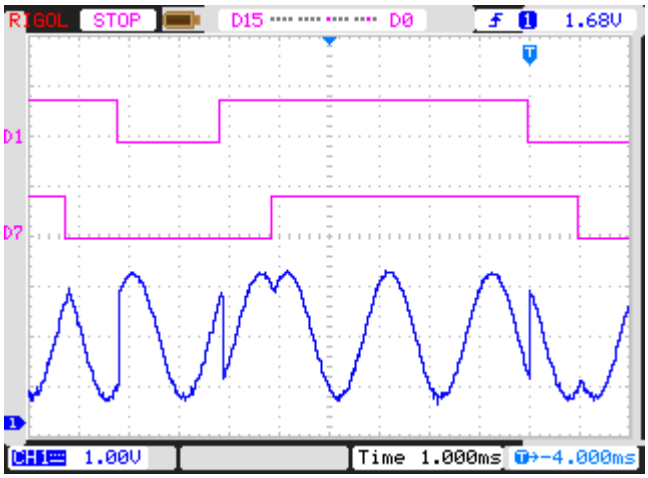 D1: TP19 D7: TP21 CH2: TP20

Experiment 16

Objective:

- Study and analysis of Complex Multiplier Output.

Setup:

- TechBook Scientech 2808
- Power Supply
- Oscilloscope/DSO
- Test probe

Connection Diagram:

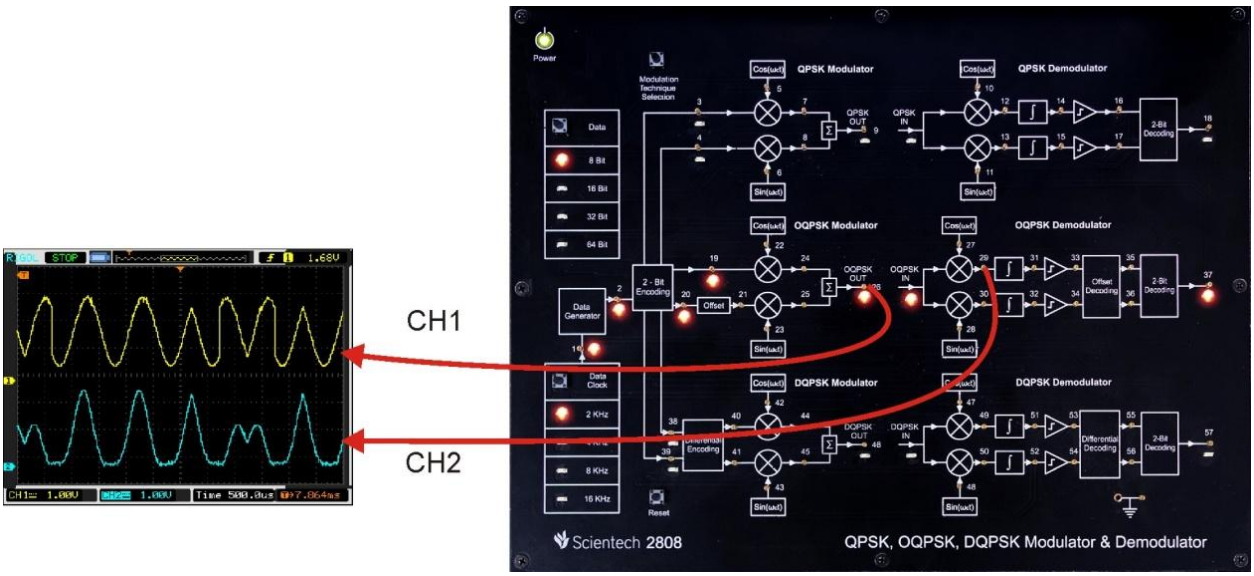

Procedure:

Step 1 : Connect and switch on the Power Supply of Scientech 2808

Step 2 : Select Offset Quadrature Phase Shift Keying Modulator using push button and LEDs of corresponding technique will glow.

Step 3 : Select *bit pattern* using push button i.e. 8 bit, 16 bit, 32 bit and 64 bit. And respective LED will glow. Observe the bit pattern on test point (TP2).

Step 4 : Select *data rate* using push button i.e. 2 KHz, 4KHz, 8 KHz and 16 KHz. Observe the change in frequency on test point (TP1).

Step 5 : Observe the 2-bit encoding i.e., I-Channel (TP19) and Q-Channel (TP20).

Step 6 : Observe Carrier Signal i.e., Sine (TP23) and Cosine (TP22), Frequency of Carrier signal will change wrt data rate.

Observation:

- Observe the input bit pattern at TP2 by varying bit pattern using respective push button.
- Observe the data rate at TP1 by varying data rate using push button.
- Observe the I-Channel (TP19) and Q-Channel (TP20).
- Observe the offset output of Q-Channel TP21.
- Observe Carrier Signal i.e., Sine (TP23) and Cosine (TP22).
- Observe I-Channel (TP24) and Q-Channel (TP25) Modulated Signal.
- Observe OQPSK Modulated Signal at TP26.
- Observe the multiplied Signal of OQPSK and Carrier signal Cosine at TP29 & OQPSK and carrier signal Sine at TP30.

Data Bit	Data Rate	DSO Results
8 Bit	8 KHz	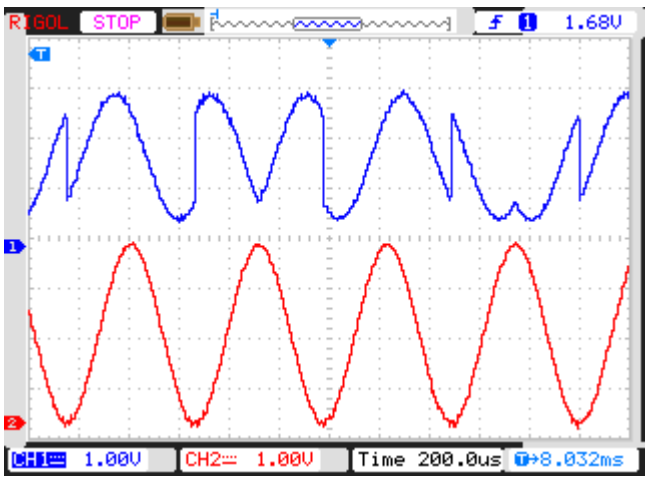 CH1: TP26 CH2: TP27
8 Bit	8 KHz	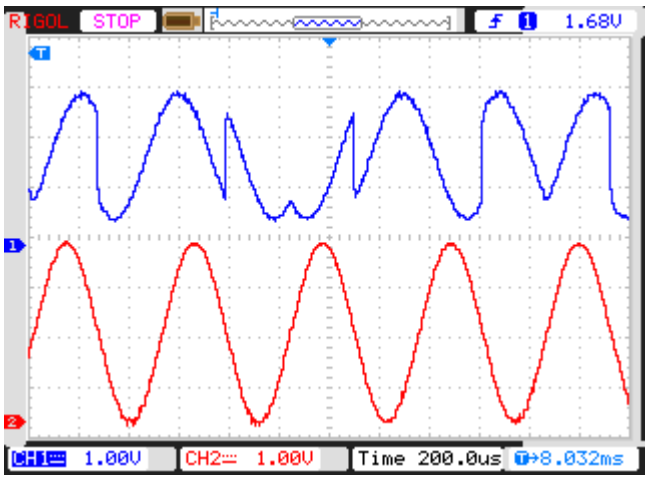

Scientech 2808

		CH1: TP26 CH2: TP28
32 Bit	4 KHz	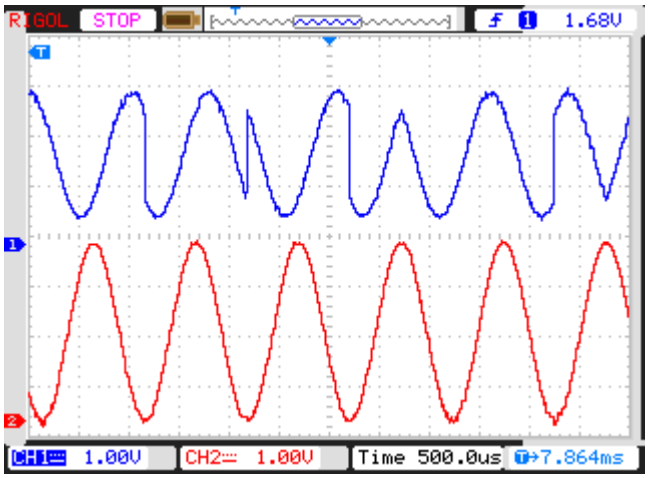 CH1: TP26 CH2: TP27
32 Bit	4 KHz	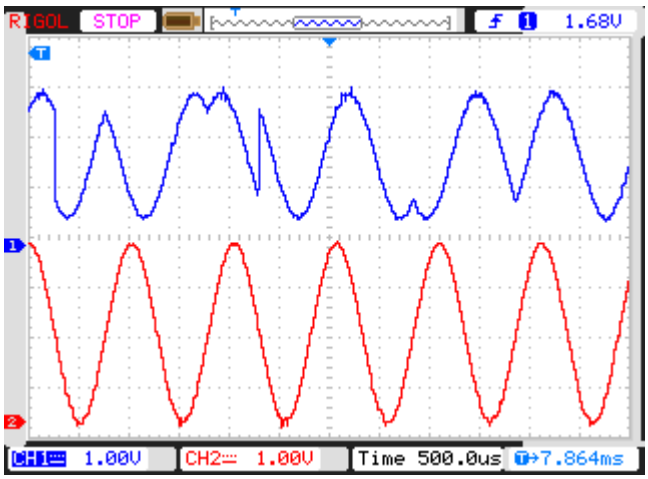 CH1: TP26 CH2: TP28
32 Bit	4 KHz	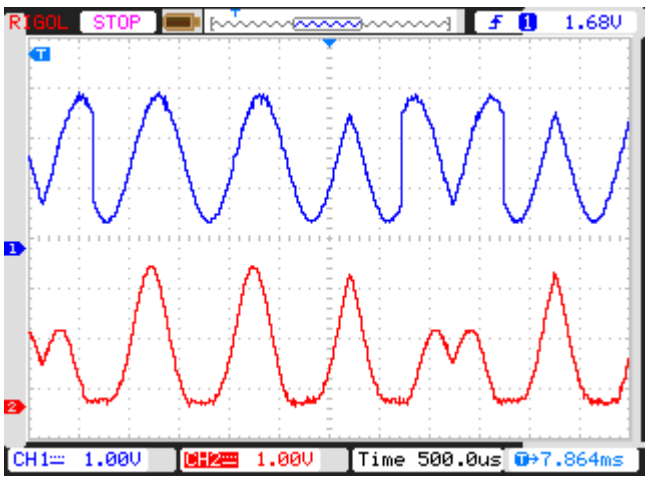 CH1: TP26 CH2: TP29

Scientech 2808

64 Bit	2 KHz	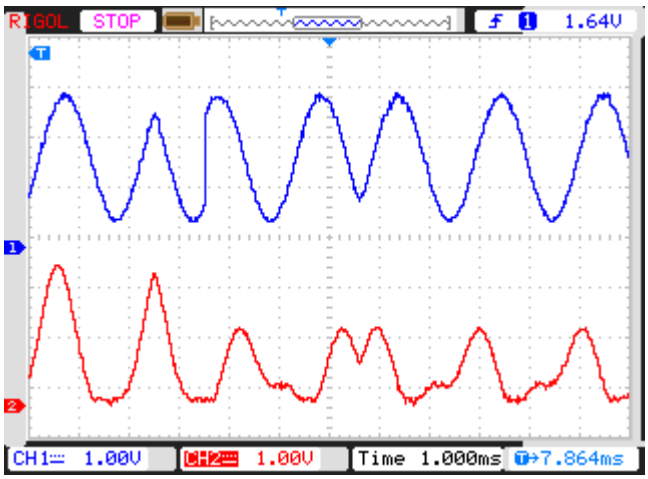 CH1: TP26 CH2: TP29
32 Bit	4 KHz	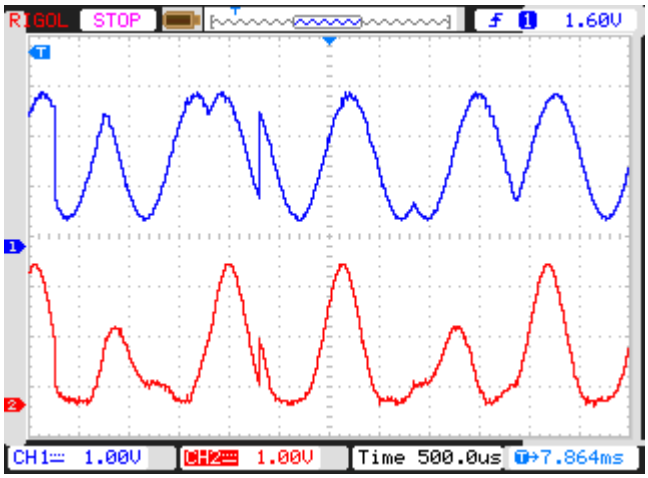 CH1: TP26 CH2: TP30
64 Bit	2 KHz	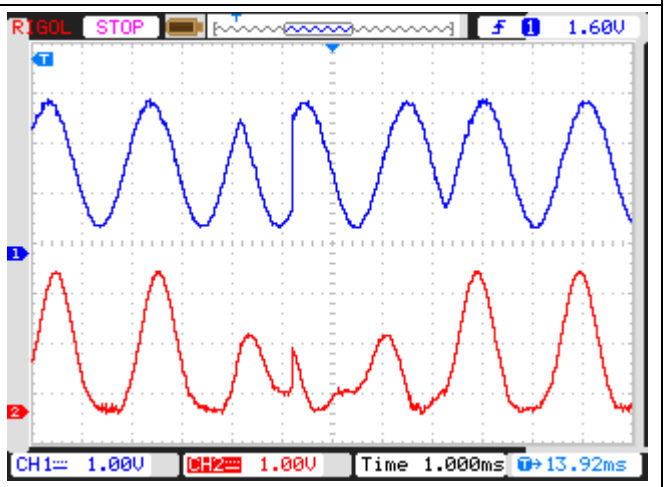 CH1: TP26 CH2: TP30

Experiment 17

Objective:

- Study and analysis of Integrator output.

Setup:

- TechBook Scientech 2808
- Power Supply
- Oscilloscope/DSO
- Test probe

Connection Diagram:

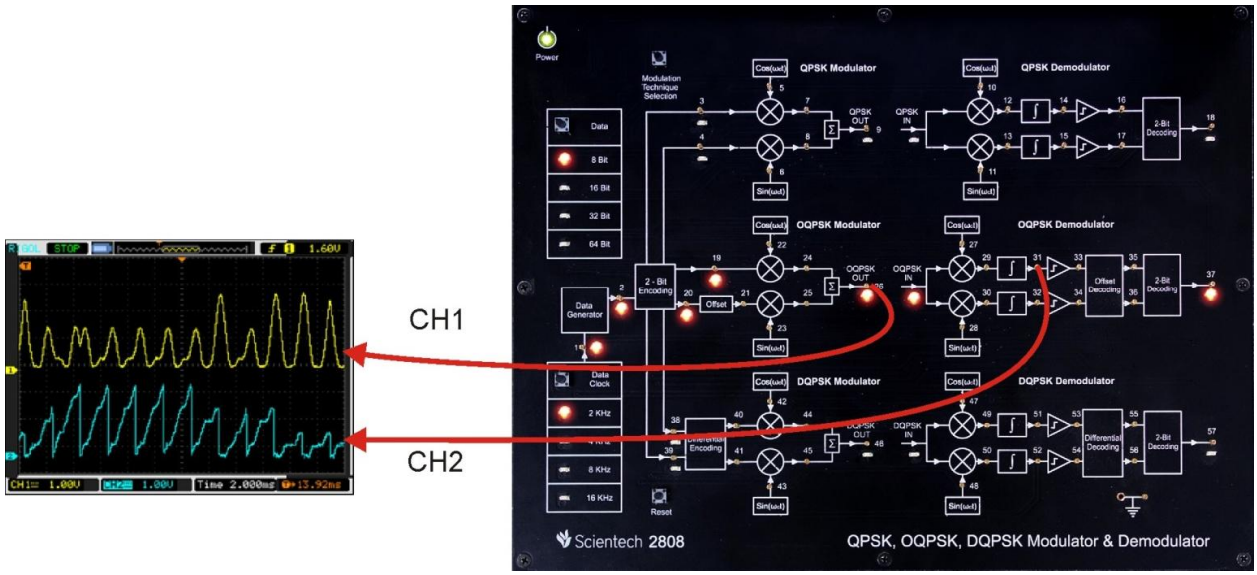

Procedure:

Step 1 : Connect and switch on the Power Supply of Scientech 2808

Step 2 : Select Offset Quadrature Phase Shift Keying Modulator using push button and LEDs of corresponding technique will glow.

Step 3 : Select *bit pattern* using push button i.e. 8 bit, 16 bit, 32 bit and 64 bit. And respective LED will glow. Observe the bit pattern on test point (TP2).

Step 4 : Select *data rate* using push button i.e. 2 KHz, 4KHz, 8 KHz and 16 KHz. Observe the change in frequency on test point (TP1).

Step 5 : Observe the 2-bit encoding i.e., I-Channel (TP19) and Q-Channel (TP20).

Step 6 : Observe Carrier Signal i.e., Sine (TP23) and Cosine (TP22), Frequency of Carrier signal will change wrt data rate.

Observation:

- Observe the input bit pattern at TP2 by varying bit pattern using respective push button.
- Observe the data rate at TP1 by varying data rate using push button.
- Observe the I-Channel (TP19) and Q-Channel (TP20).
- Observe the offset output of Q-Channel TP21.
- Observe Carrier Signal i.e., Sine (TP23) and Cosine (TP22).
- Observe I-Channel (TP24) and Q-Channel (TP25) Modulated Signal.
- Observe OQPSK Modulated Signal at TP26.
- Observe the multiplied Signal of OQPSK and Carrier signal Cosine at TP29 & OQPSK and carrier signal Sine at TP30.
- Observe the integrated output of I-Channel TP31 and Q-Channel TP32.

Data Bit	Data Rate	DSO Results
32 Bit	4 KHz	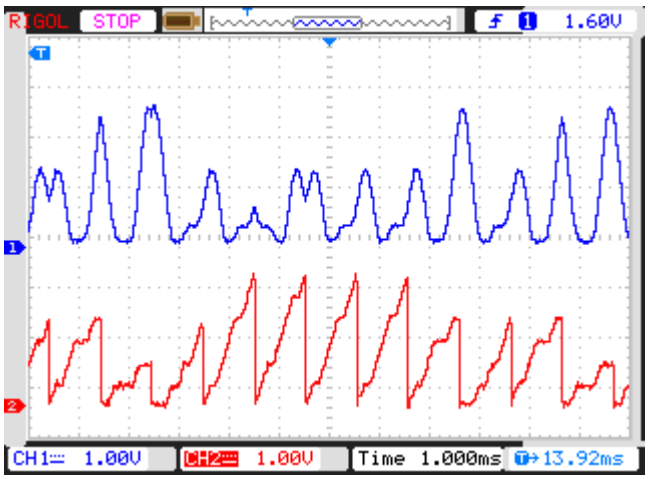 CH1: TP29 CH2: TP31
64 Bit	2 KHz	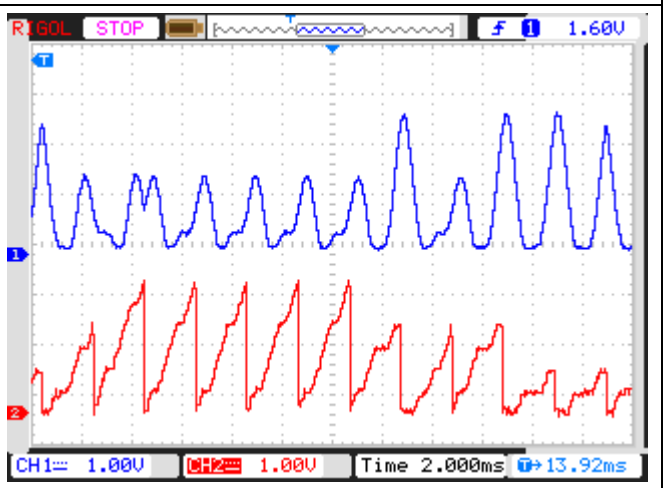

Scientech 2808

		CH1: TP29 CH2: TP31
32 Bit	4 KHz	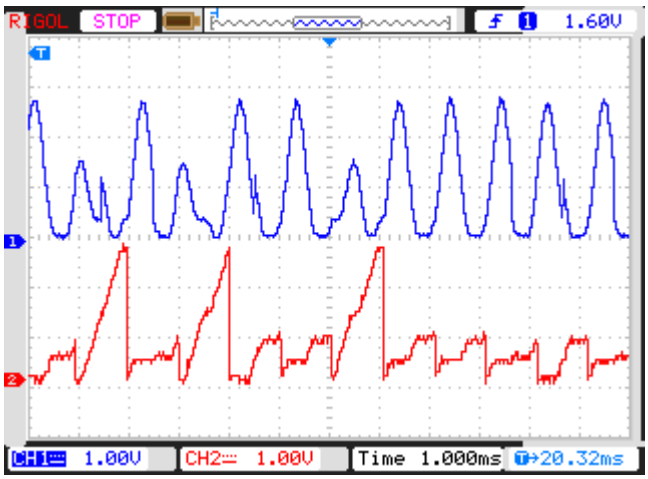 CH1: TP30 CH2: TP32
64 Bit	2 KHz	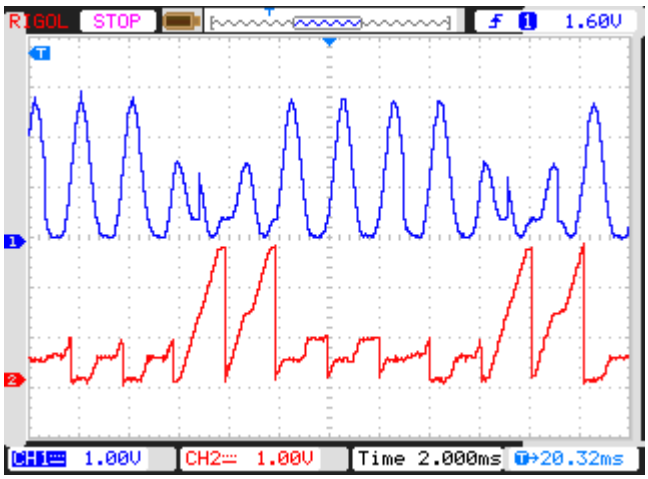 CH1: TP30 CH2: TP32

Experiment 18

Objective:

- Study and analysis of Comparator output.

Setup:

- TechBook Scientech 2808
- Power Supply
- Oscilloscope/DSO
- Test probe

Connection Diagram:

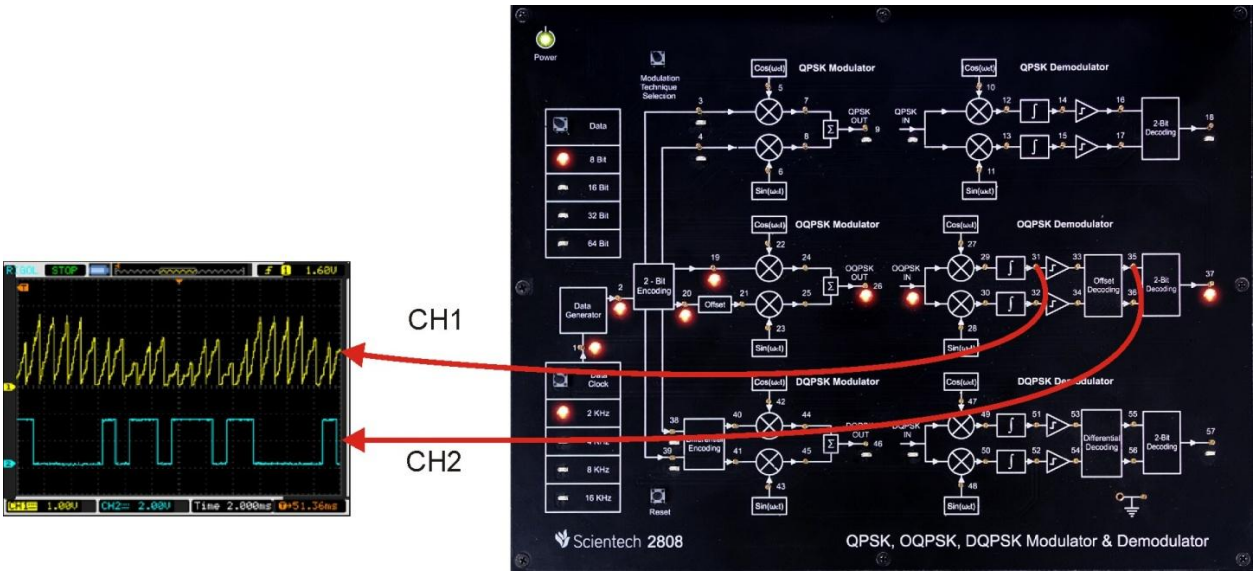

Procedure:

Step 1 : Connect and switch on the Power Supply of Scientech 2808

Step 2 : Select Offset Quadrature Phase Shift Keying Modulator using push button and LEDs of corresponding technique will glow.

Step 3 : Select *bit pattern* using push button i.e. 8 bit, 16 bit, 32 bit and 64 bit. And respective LED will glow. Observe the bit pattern on test point (TP2).

Step 4 : Select *data rate* using push button i.e. 2 KHz, 4KHz, 8 KHz and 16 KHz. Observe the change in frequency on test point (TP1).

Step 5 : Observe the 2-bit encoding i.e., I-Channel (TP19) and Q-Channel (TP20).

Step 6 : Observe Carrier Signal i.e., Sine (TP23) and Cosine (TP22), Frequency of Carrier signal will change wrt data rate.

Observation:

- Observe the input bit pattern at TP2 by varying bit pattern using respective push button.
- Observe the data rate at TP1 by varying data rate using push button.
- Observe the I-Channel (TP19) and Q-Channel (TP20).
- Observe the offset output of Q-Channel TP21.
- Observe Carrier Signal i.e., Sine (TP23) and Cosine (TP22).
- Observe I-Channel (TP24) and Q-Channel (TP25) Modulated Signal.
- Observe OQPSK Modulated Signal at TP26.
- Observe the multiplied Signal of OQPSK and Carrier signal Cosine at TP29 & OQPSK and carrier signal Sine at TP30.
- Observe the integrated output of I-Channel TP31 and Q-Channel TP32.
- Observe the comparator output of I-Channel at TP33 and Q-Channel TP34 that is same as at input with delay.

Data Bit	Data Rate	DSO Results
32 Bit	4 KHz	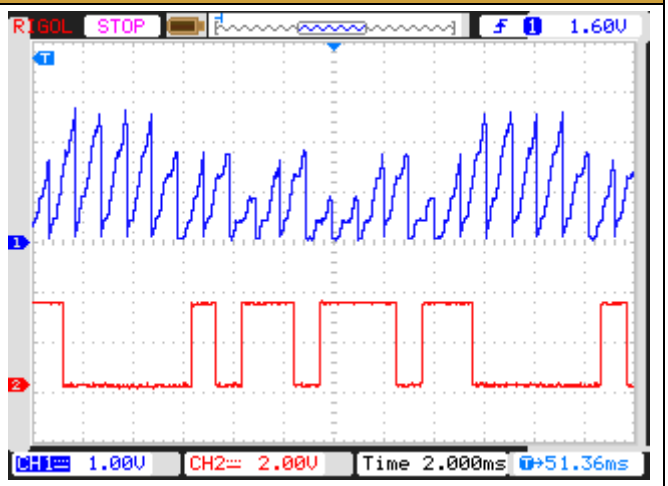 CH1: TP31 CH2: TP33

Scientech 2808

32 Bit	4 KHz	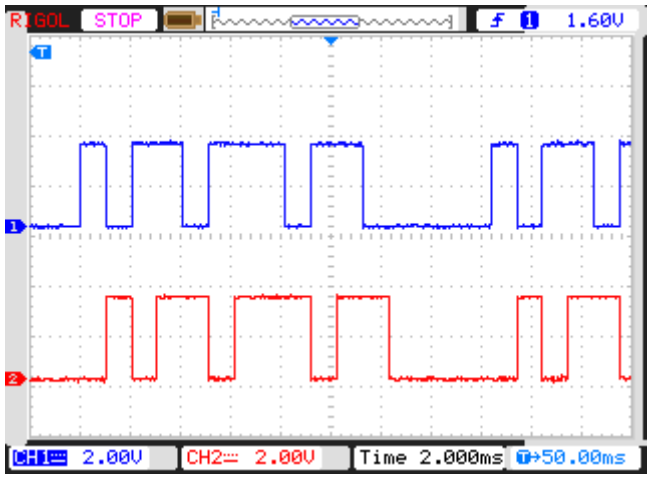 CH1: TP19 CH2: TP33
64 Bit	2 KHz	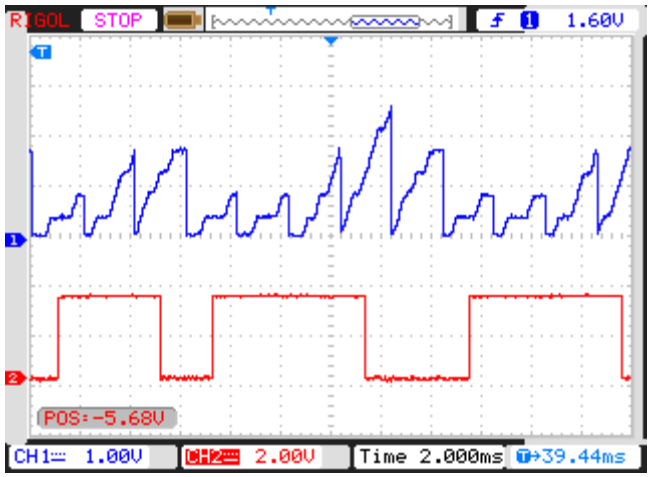 CH1: TP31 CH2: TP33
64 Bit	2 KHz	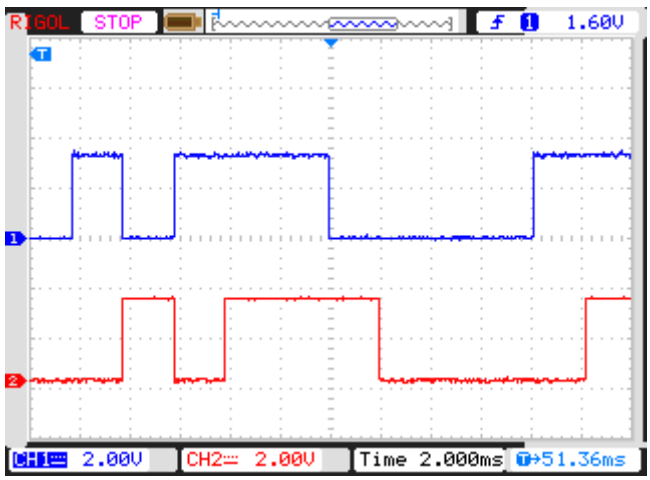 CH1: TP19 CH2: TP33

Scientech 2808

32 Bit	4 KHz	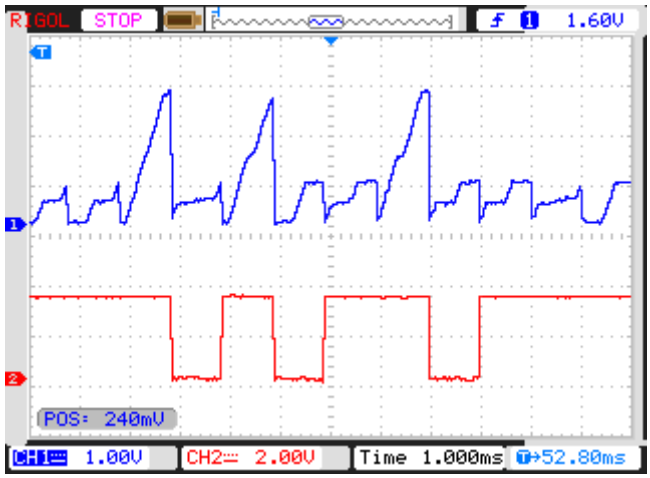 CH1: TP32 CH2: TP34
32 Bit	4 KHz	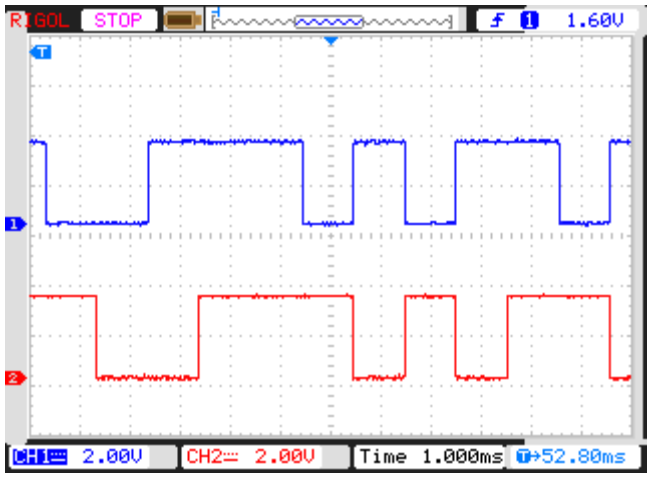 CH1: TP21 CH2: TP34
64 Bit	2 KHz	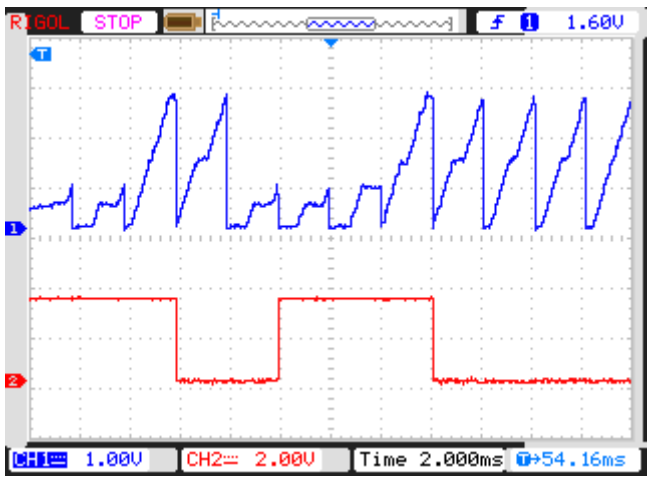 CH1: TP32 CH2: TP34

Scientech 2808

64 Bit	2 KHz	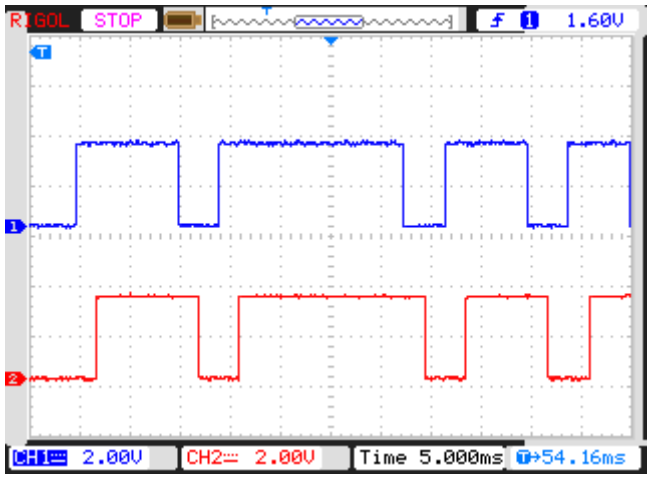 CH1: TP21 CH2: TP34

Experiment 19

Objective:

- Study and analysis of Offset Decoding Output.

Setup:

- TechBook Scientech 2808
- Power Supply
- Oscilloscope/DSO
- Test probe

Connection Diagram:

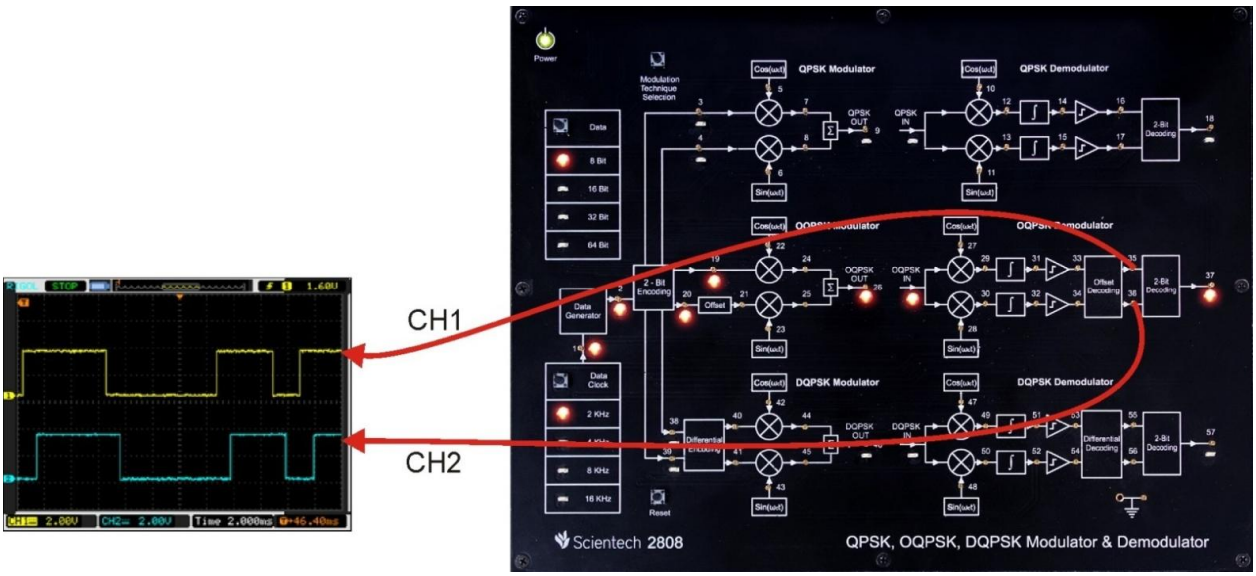

Procedure:

Step 1 : Connect and switch on the Power Supply of Scientech 2808

Step 2 : Select Offset Quadrature Phase Shift Keying Modulator using push button and LEDs of corresponding technique will glow.

Step 3 : Select *bit pattern* using push button i.e. 8 bit, 16 bit, 32 bit and 64 bit. And respective LED will glow. Observe the bit pattern on test point (TP2).

Step 4 : Select *data rate* using push button i.e. 2 KHz, 4KHz, 8 KHz and 16 KHz. Observe the change in frequency on test point (TP1).

Step 5 : Observe the 2-bit encoding i.e., I-Channel (TP19) and Q-Channel (TP20).

Step 6 : Observe Carrier Signal i.e., Sine (TP23) and Cosine (TP22), Frequency of Carrier signal will change wrt data rate.

Observation:

- Observe the input bit pattern at TP2 by varying bit pattern using respective push button.
- Observe the data rate at TP1 by varying data rate using push button.
- Observe the I-Channel (TP19) and Q-Channel (TP20).
- Observe the offset output of Q-Channel TP21.
- Observe Carrier Signal i.e., Sine (TP23) and Cosine (TP22).
- Observe I-Channel (TP24) and Q-Channel (TP25) Modulated Signal.
- Observe OQPSK Modulated Signal at TP26.
- Observe the multiplied Signal of OQPSK and Carrier signal Cosine at TP29 & OQPSK and carrier signal Sine at TP30.
- Observe the integrated output of I-Channel TP31 and Q-Channel TP32.
- Observe the comparator output of I-Channel at TP33 and Q-Channel TP34 that is same as at input with delay.
- Observe the offset decoding output of I-Channel TP35 and Q-Channel TP36.

Data Bit	Data Rate	DSO Results
32 Bit	4 KHz	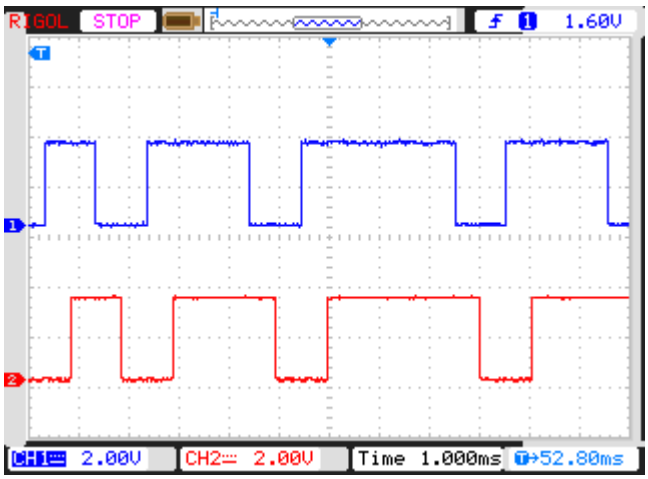 CH1: TP33 CH2: TP35

Scientech 2808

64 Bit	2 KHz	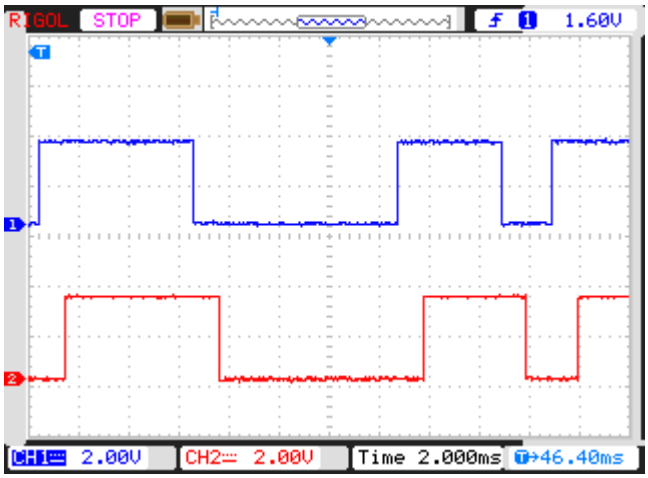 CH1: TP33 CH2: TP35
32 Bit	4 KHz	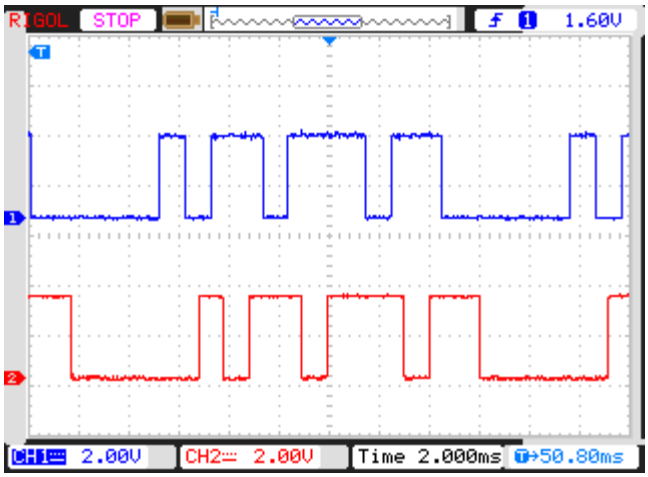 CH1: TP19 CH2: TP35
32 Bit	4 KHz	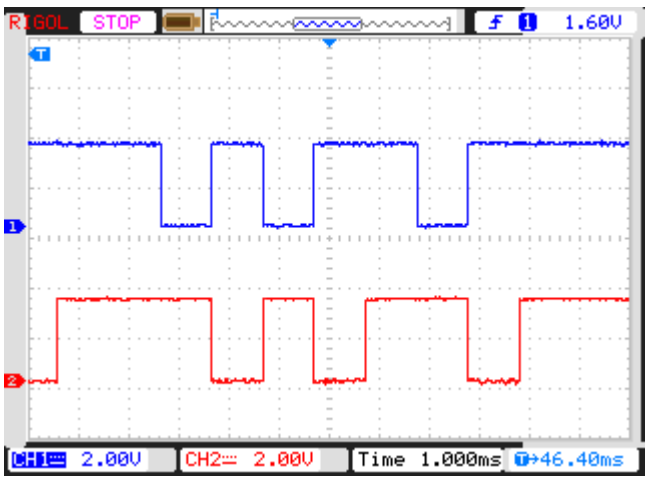 CH1: TP34 CH2: TP36

Scientech 2808

64 Bit	2 KHz	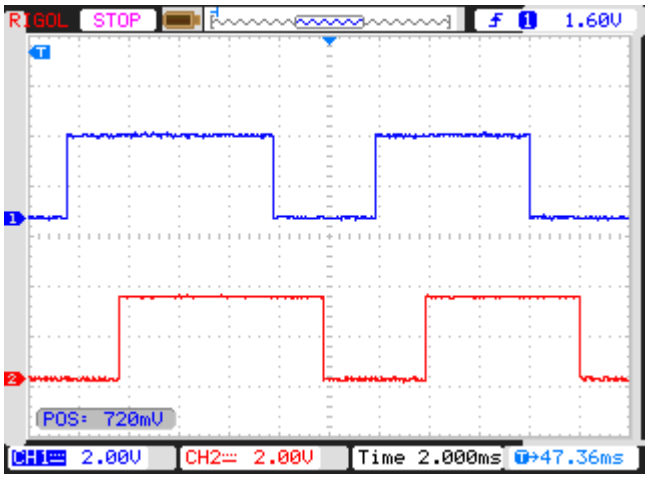 CH1: TP34 CH2: TP36
32 Bit	4 KHz	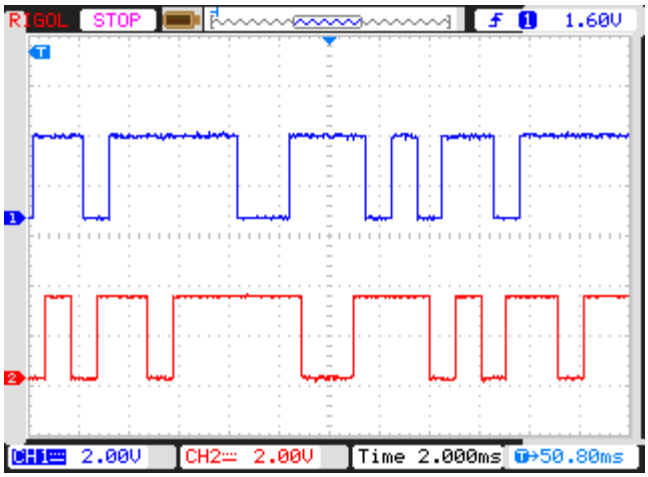 CH1: TP20 CH2: TP36
32 Bit	4 KHz	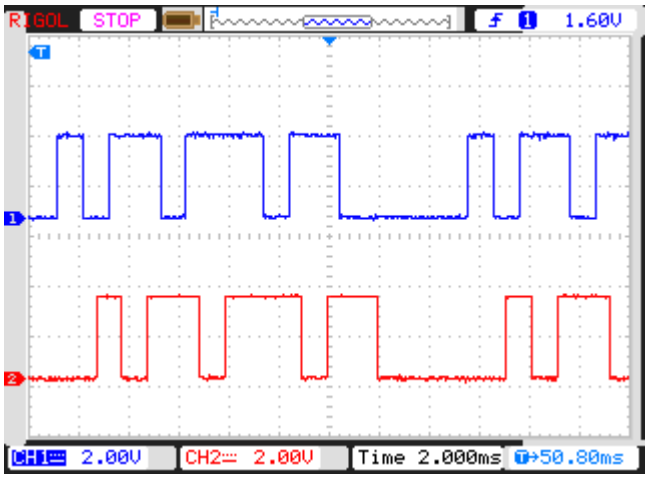 CH1: TP34 CH2: TP36

Experiment 20

Objective:

- Study and analysis of OQPSK Demodulated Output.

Setup:

- TechBook Scientech 2808
- Power Supply
- Oscilloscope/DSO
- Test probe

Connection Diagram:

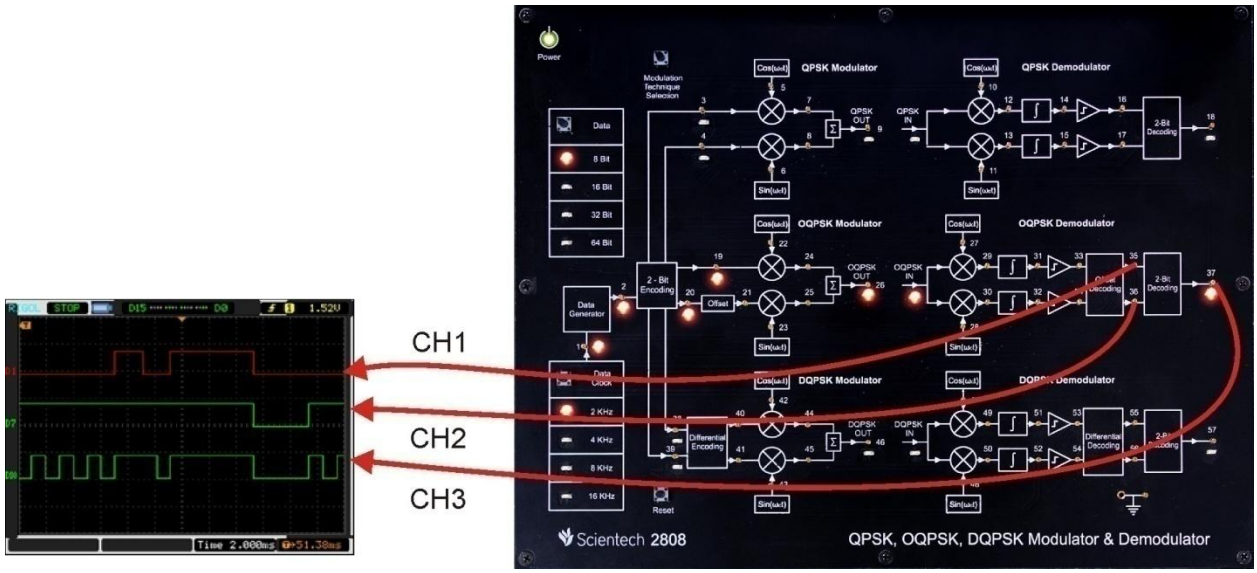

Procedure:

Step 1 : Connect and switch on the Power Supply of Scientech 2808

Step 2 : Select Offset Quadrature Phase Shift Keying Modulator using push button and LEDs of corresponding technique will glow.

Step 3 : Select *bit pattern* using push button i.e. 8 bit, 16 bit, 32 bit and 64 bit. And respective LED will glow. Observe the bit pattern on test point (TP2).

Step 4 : Select *data rate* using push button i.e. 2 KHz, 4KHz, 8 KHz and 16 KHz. Observe the change in frequency on test point (TP1).

Step 5 : Observe the 2-bit encoding i.e., I-Channel (TP19) and Q-Channel (TP20).

Step 6 : Observe Carrier Signal i.e., Sine (TP23) and Cosine (TP22), Frequency of Carrier signal will change wrt data rate.

Observation:

- Observe the input bit pattern at TP2 by varying bit pattern using respective push button.
- Observe the data rate at TP1 by varying data rate using push button.
- Observe the I-Channel (TP19) and Q-Channel (TP20).
- Observe the offset output of Q-Channel TP21.
- Observe Carrier Signal i.e., Sine (TP23) and Cosine (TP22).
- Observe I-Channel (TP24) and Q-Channel (TP25) Modulated Signal.
- Observe OQPSK Modulated Signal at TP26.
- Observe the multiplied Signal of OQPSK and Carrier signal Cosine at TP29 & OQPSK and carrier signal Sine at TP30.
- Observe the integrated output of I-Channel TP31 and Q-Channel TP32.
- Observe the comparator output of I-Channel at TP33 and Q-Channel TP34 that is same as at input with delay.
- Observe the offset decoding output of I-Channel TP35 and Q-Channel TP36.
- Observe the OQPSK Demodulated Signal at TP37.

Data Bit	Data Rate	DSO Results
32 Bit	4 KHz	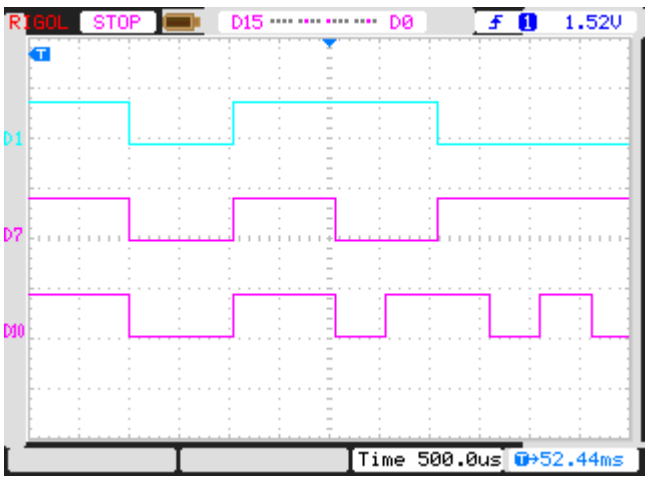 D1: TP35 D7: TP36 D10: TP37

Scientech 2808

64 Bit	2 KHz	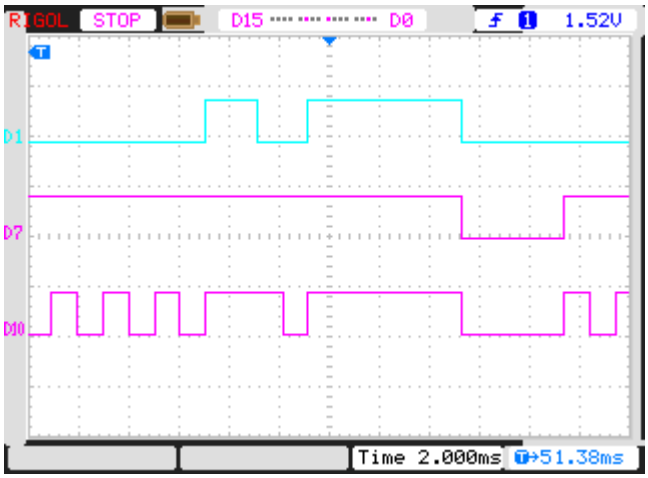 D1: TP35 D7: TP36 D10: TP37
32 Bit	4 KHz	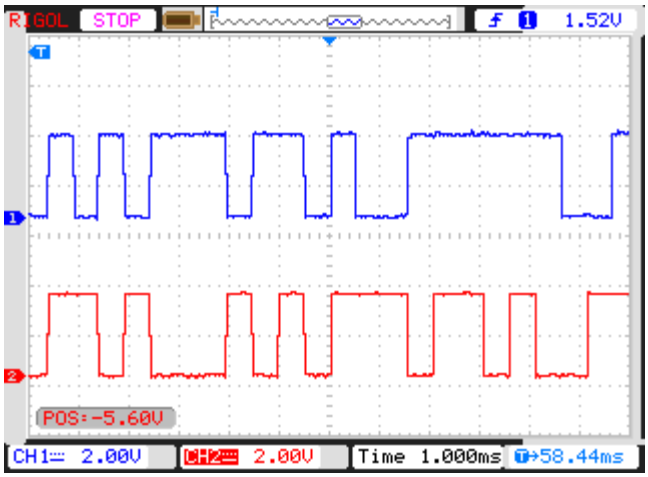 D1: TP2 D7: TP37
64 Bit	2 KHz	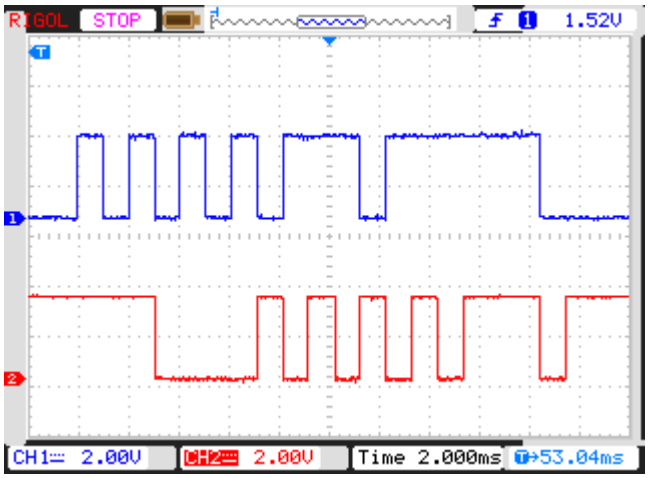 D1: TP2 D7: TP37

Differential Quadrature Phase Shift Keying Modulator

Introduction:

What is Differential Quadrature Phase Shift Keying Modulator and how it works?

Differential Phase Shift Keying (DPSK) is a common form of phase modulation that conveys data by changing the phase of the carrier wave. As mentioned for BPSK and QPSK there is an ambiguity of phase if the constellation is rotated by some effect in the communications channel through which the signal passes. This problem can be overcome by using the data to change rather than set the phase.

For example, in differentially-encoded BPSK a binary '1' may be transmitted by adding 180° to the current phase and a binary '0' by adding 0° to the current phase. In differentially-encoded QPSK, the phase-shifts are 0°, 90°, 180°, -90° corresponding to data '00', '01', '11', '10'.

Differential Quadrature Phase Shift Keying Modulator:

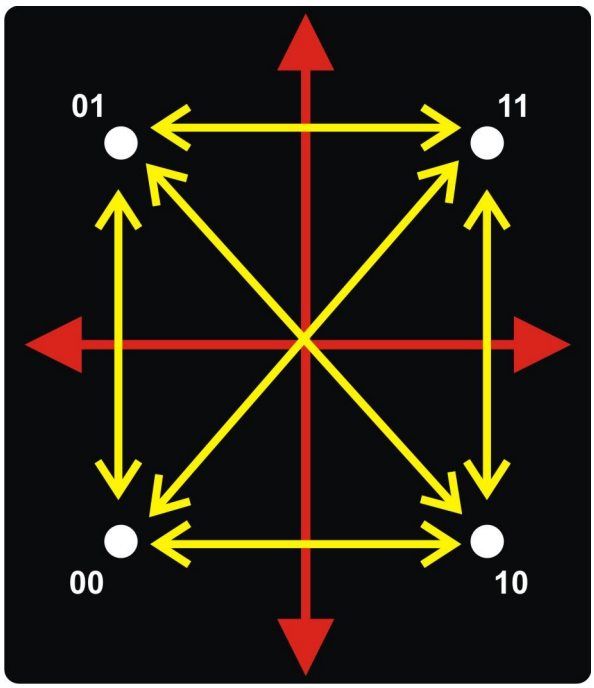

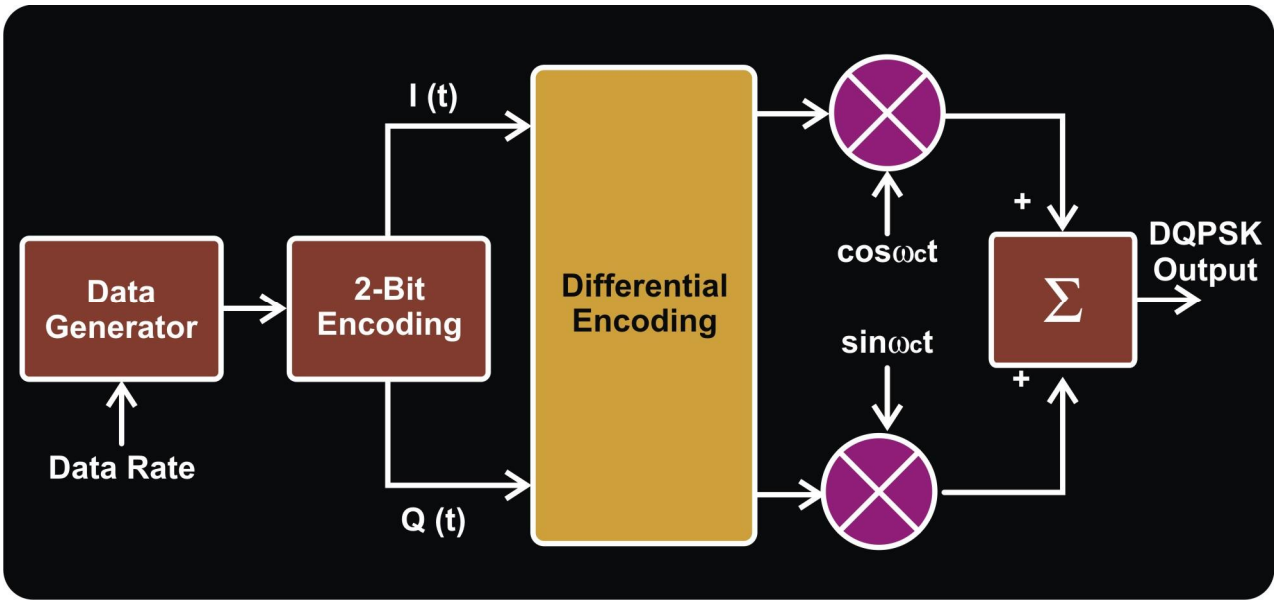

Differential Quadrature Phase Shift Keying Demodulator:

The incoming modulated signal is multiplied with the cosine and the sine signal generated from the NCO. The output of the multiplier contains high $(f_{in} + f_{nco})$ and low $(f_{in} - f_{nco})$ frequency components. Then integrator integrates the gain of signal and then with the help of comparator input signal is received on I and Q channel of demodulator. Then this data form I and Q channel is given to differential decoder the output of differential encoder is given to parallel to serial converter to give original data.

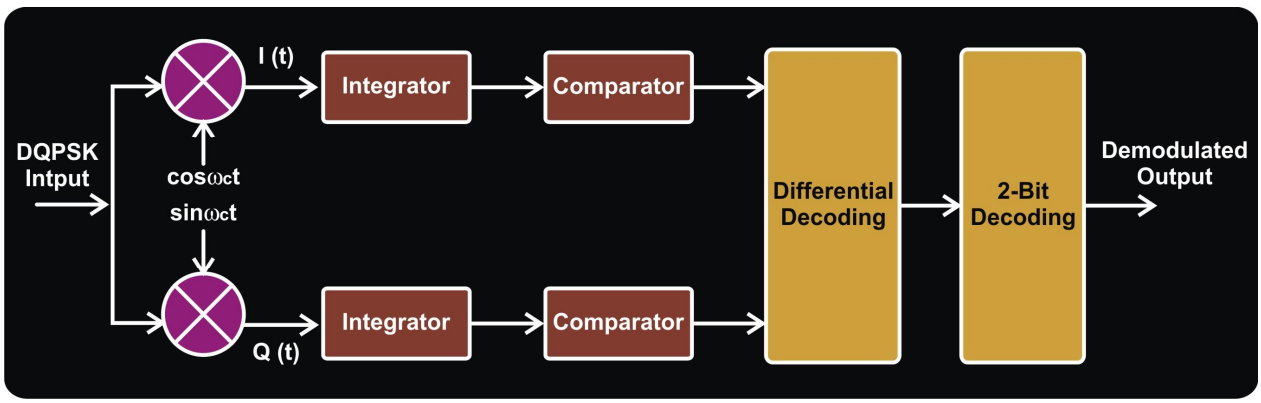

Advantages:

- DQPSK is the only modulation format which allows processing of 40Gb/s data-rate in a 50-GHz channel spacing system

Applications:

- In PMD compensation based on Carrier-Suppressed Return-to-Zero (CSRZ) format.

Experiment 21

Objective:

- Study and analysis of bit pattern generation.
  - 8 bit, 16 bit, 32 bit and 64 bit.
- Observe bit pattern generation at different data rate i.e.
  - 2 KHz, 4 KHz, 8 KHz and 16 KHz.

Setup:

- TechBook Scientech 2808
- Power Supply
- Oscilloscope/DSO
- Test probe

Connection Diagram:

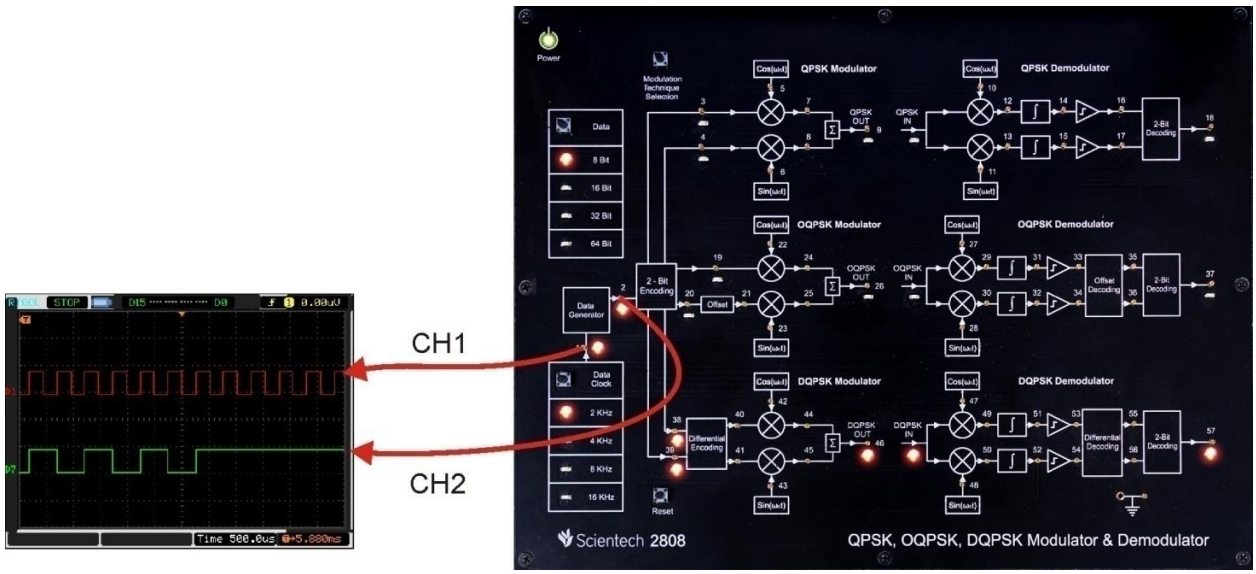

Procedure:

Step 1 : Connect and switch on the Power Supply of Scientech 2808.

Step 2 : Select Differential Quadrature Phase Shift Keying Modulator using push button and LEDs of corresponding technique will glow.

Step 3 : Select *bit pattern* using push button i.e. 8 bit, 16 bit, 32 bit and 64 bit. And respective LED will glow. Observe the bit pattern on test point (TP2).

Step 4 : Select *data rate* using push button i.e. 2 KHz, 4KHz, 8 KHz and 16 KHz. Observe the change in frequency on test point (TP1).

Scientech 2808

Observation:

- Observe the input bit pattern at TP2 by varying bit pattern using respective push button.
- Observe the data rate at TP1 by varying data rate using push button.

Data Bit	Data Rate	DSO Results
16 Bit	4 KHz	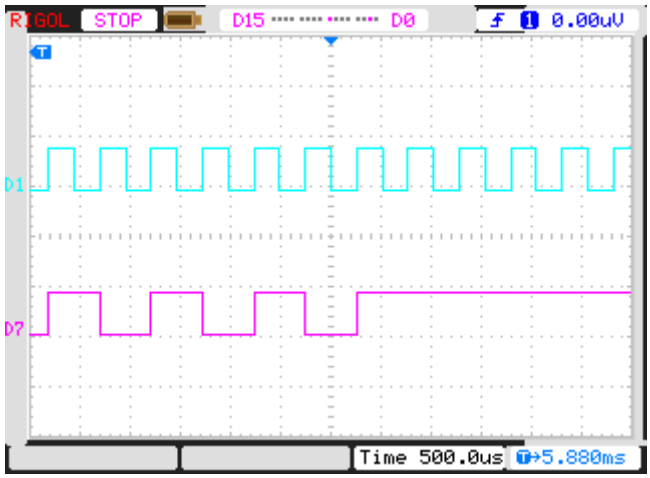 D1: TP1 D7: TP2
32 Bit	2 KHz	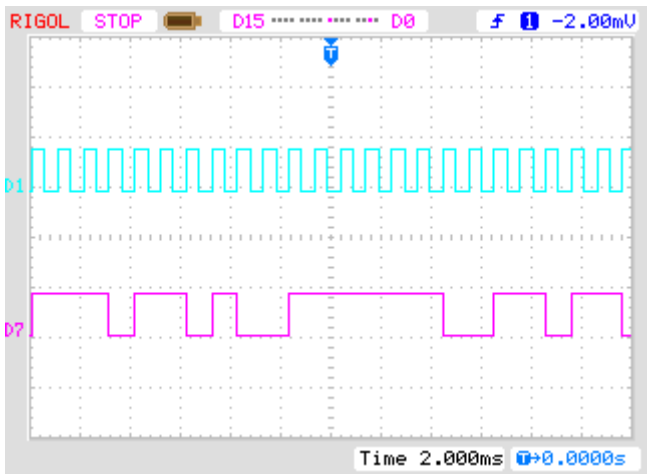 D1: TP1 D7: TP2

Scientech 2808

64 Bit	8 KHz	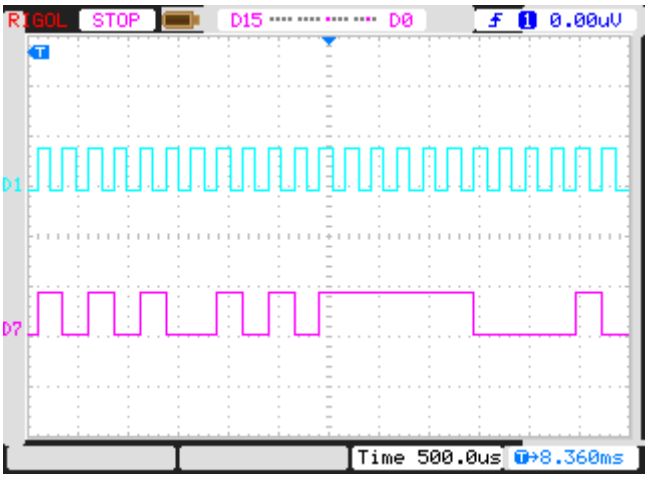 D1: TP1 D7: TP2

Experiment 22

Objective:

- Study and analysis of 2-bit encoding.
  - I-Channel
  - Q-Channel

Setup:

- TechBook Scientech 2808
- Power Supply
- Oscilloscope/DSO
- Test probe

Connection Diagram:

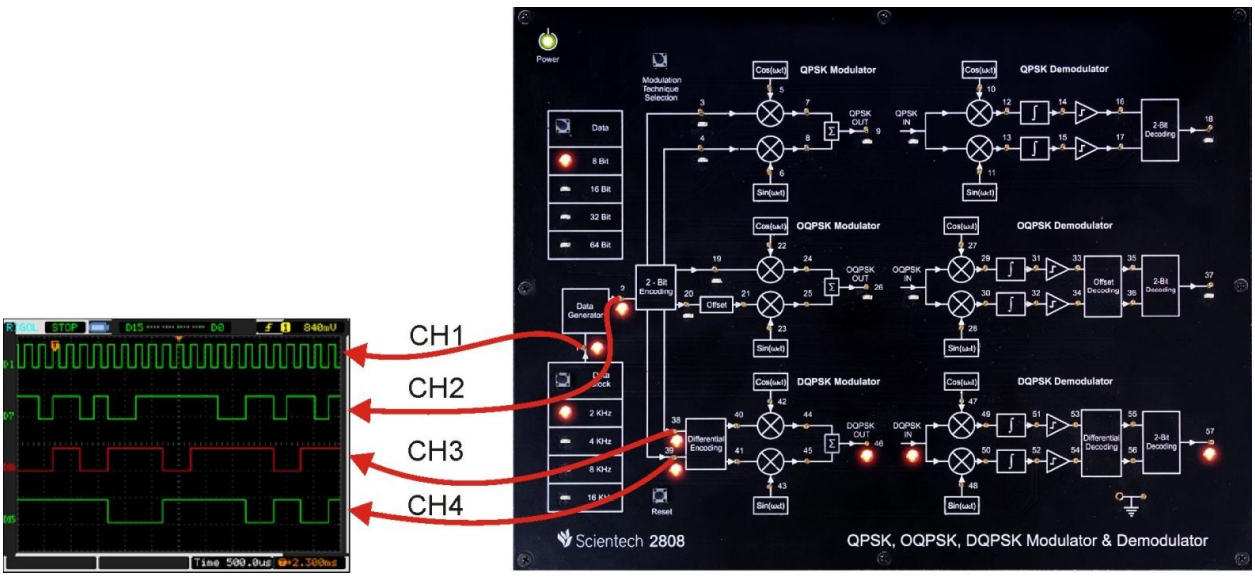

Procedure:

Step 1 : Connect and switch on the Power Supply of Scientech 2808

Step 2 : Select Differential Quadrature Phase Shift Keying Modulator using push button and LEDs of corresponding technique will glow.

Step 3 : Select *bit pattern* using push button i.e. 8 bit, 16 bit, 32 bit and 64 bit. And respective LED will glow. Observe the bit pattern on test point (TP2).

Step 4 : Select *data rate* using push button i.e. 2 KHz, 4KHz, 8 KHz and 16 KHz. Observe the change in frequency on test point (TP1).

Step 5 : Observe the 2-bit encoding i.e., I-Channel (TP38) and Q-Channel (TP39).

Scientech 2808

Observation:

- Observe the input bit pattern at TP2 by varying bit pattern using respective push button.
- Observe the data rate at TP1 by varying data rate using push button.
- Observe the I-Channel (TP38) and Q-Channel (TP39).

Data Bit	Data Rate	DSO Results
8 Bit	8 KHz	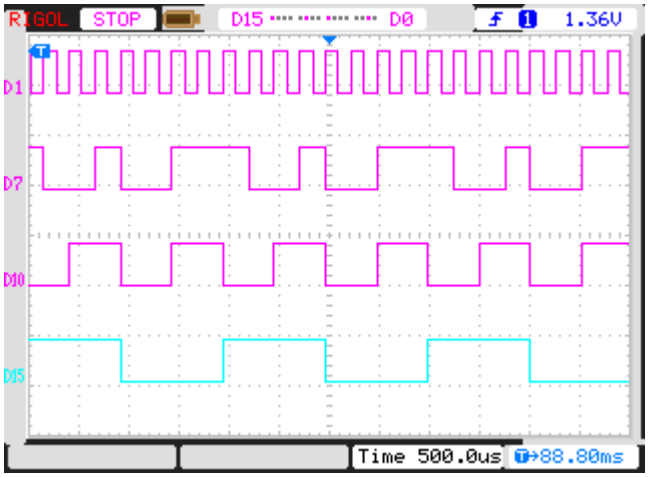 D1: TP1 D7: TP2 D10: TP38 D15: TP39
32 Bit	4 KHz	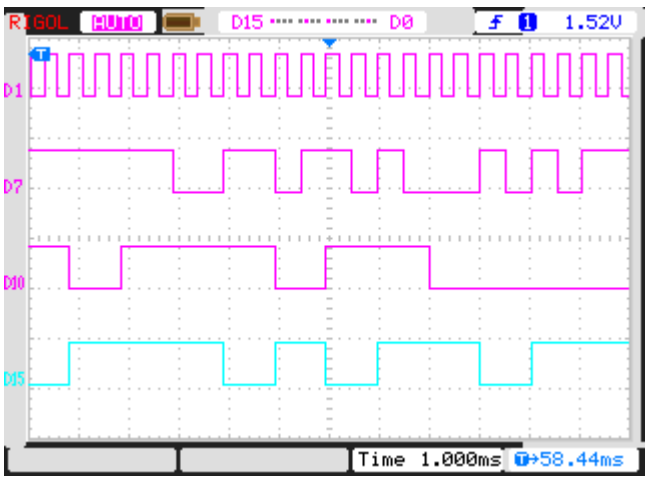 D1: TP1 D7: TP2 D10: TP38 D15: TP39

Scientech 2808

64 Bit	2 KHz	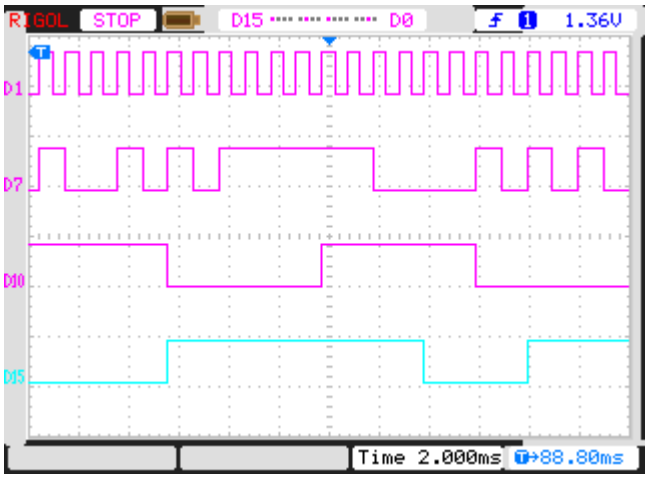 D1: TP1 D7: TP2 D10: TP38 D15: TP39

Experiment 23

Objective:

- Study and analysis of differential encoding of I-Channel and Q-Channel.

Setup:

- TechBook Scientech 2808
- Power Supply
- Oscilloscope/DSO
- Test probe

Connection Diagram:

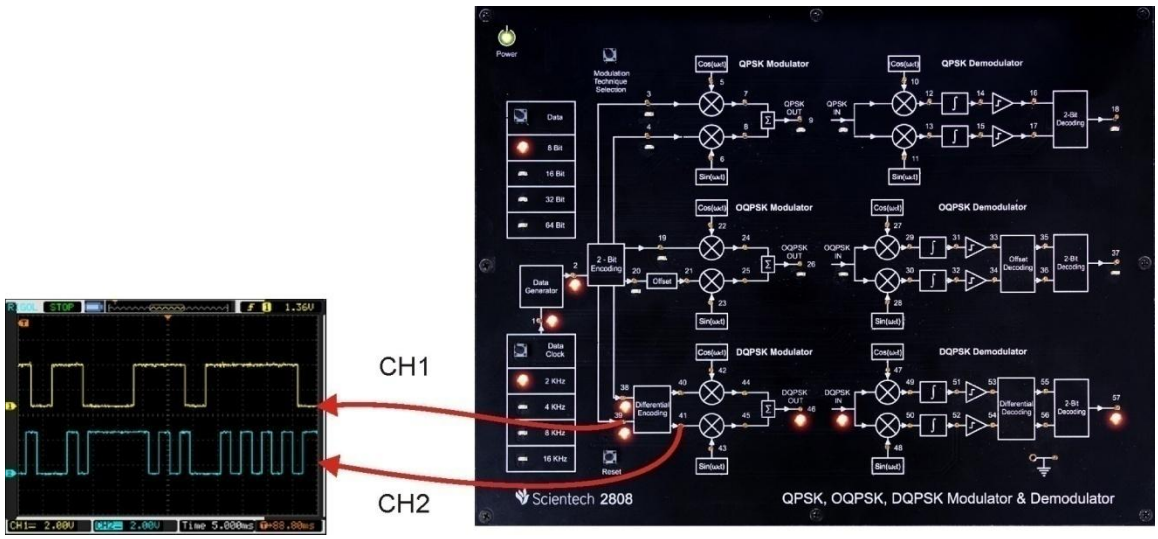

Procedure:

Step 1 : Connect and switch on the Power Supply of Scientech 2808

Step 2 : Select Differential Quadrature Phase Shift Keying Modulator using push button and LEDs of corresponding technique will glow.

Step 3 : Select *bit pattern* using push button i.e. 8 bit, 16 bit, 32 bit and 64 bit. And respective LED will glow. Observe the bit pattern on test point (TP2).

Step 4 : Select *data rate* using push button i.e. 2 KHz, 4KHz, 8 KHz and 16 KHz. Observe the change in frequency on test point (TP1).

Step 5 : Observe the 2-bit encoding i.e., I-Channel (TP38) and Q-Channel (TP39).

Scientech 2808

Observation:

- Observe the input bit pattern at TP2 by varying bit pattern using respective push button.
- Observe the data rate at TP1 by varying data rate using push button.
- Observe the I-Channel (TP38) and Q-Channel (TP39).
- Observe the Differential encoded output of I-Channel at TP40 and Q-Channel TP41.

Data Bit	Data Rate	DSO Results
8 Bit	8 KHz	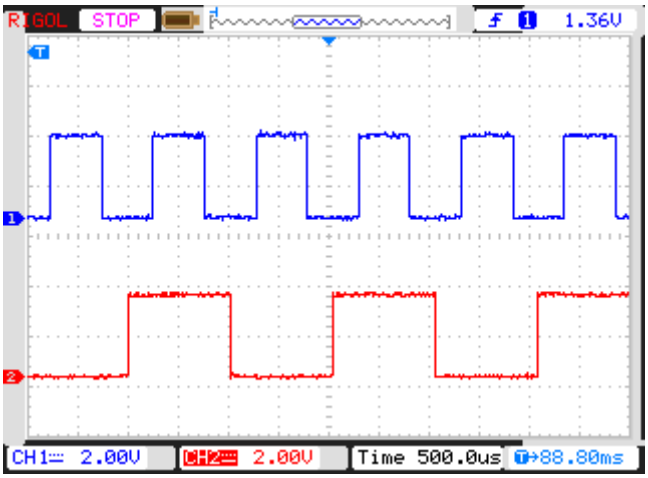 CH1: TP38 CH2: TP40
32 Bit	4 KHz	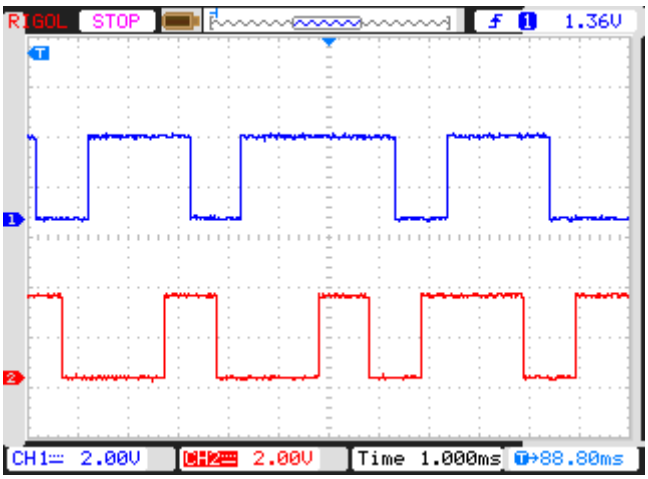 CH1: TP38 CH2: TP40

Scientech 2808

64 Bit	2 KHz	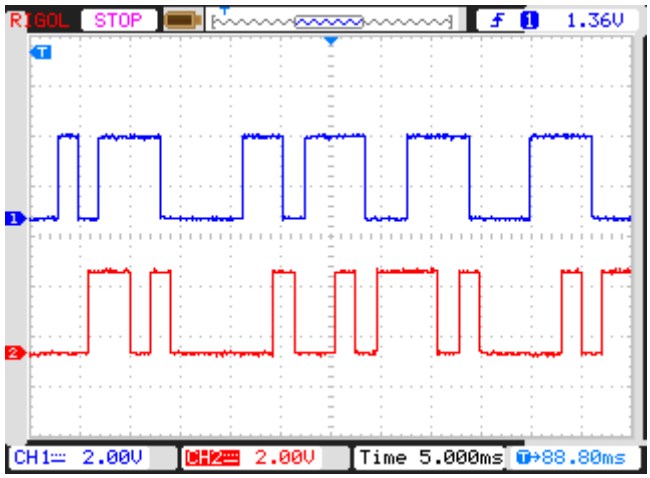 CH1: TP38 CH2: TP40
8 Bit	8 KHz	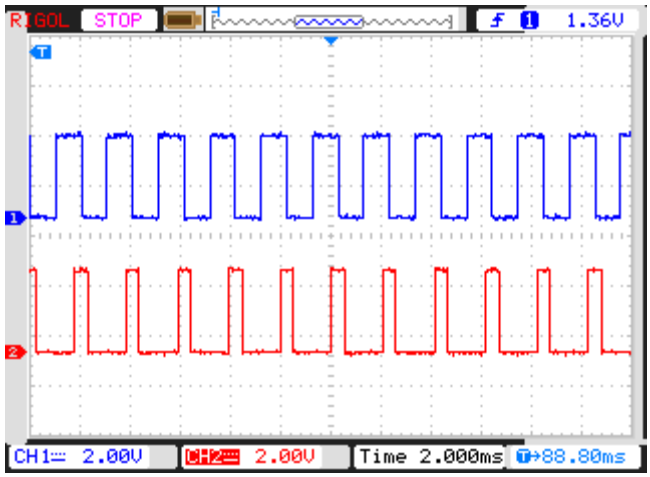 CH1: TP39 CH2: TP41

Scientech 2808

32 Bit	4 KHz	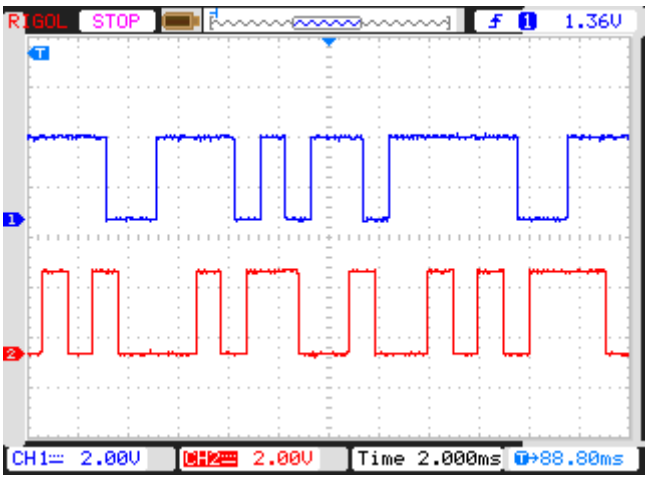 CH1: TP39 CH2: TP41
64 Bit	2 KHz	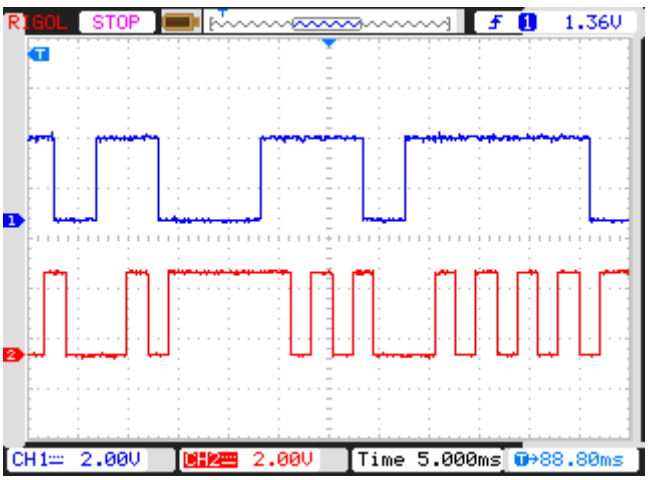 CH1: TP39 CH2: TP41

Experiment 24

Objective:

- Study and analysis of carrier Signal.
  - Cosine
  - Sine

Setup:

- TechBook Scientech 2808
- Power Supply
- Oscilloscope/DSO
- Test probe

Connection Diagram:

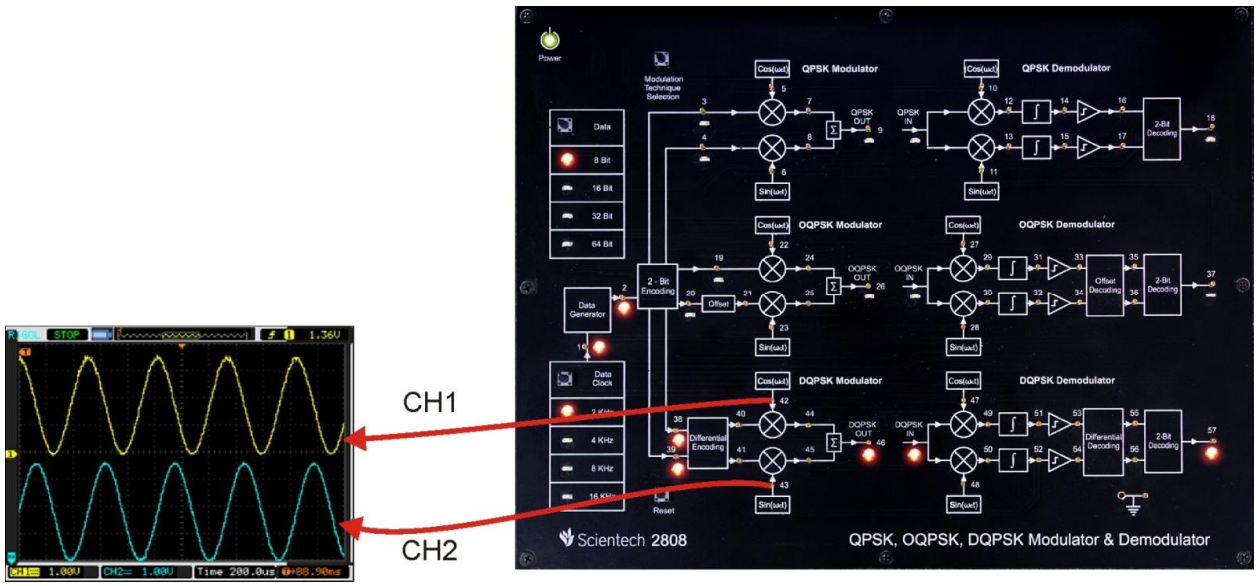

Procedure:

Step 1 : Connect and switch on the Power Supply of Scientech 2808

Step 2 : Select Differential Quadrature Phase Shift Keying Modulator using push button and LEDs of corresponding technique will glow.

Step 3 : Select *bit pattern* using push button i.e. 8 bit, 16 bit, 32 bit and 64 bit. And respective LED will glow. Observe the bit pattern on test point (TP2).

Step 4 : Select *data rate* using push button i.e. 2 KHz, 4KHz, 8 KHz and 16 KHz. Observe the change in frequency on test point (TP1).

Step 5 : Observe the 2-bit encoding i.e., I-Channel (TP38) and Q-Channel (TP39).

Step 6 : Observe Carrier Signal i.e., Sine (TP43) and Cosine (TP42), Frequency of Carrier signal will change wrt data rate.

Observation:

- Observe the input bit pattern at TP2 by varying bit pattern using respective push button.
- Observe the data rate at TP1 by varying data rate using push button.
- Observe the I-Channel (TP38) and Q-Channel (TP39).
- Observe the Differential encoded output of I-Channel at TP40 and Q-Channel TP41.
- Observe Carrier Signal i.e., Sine (TP43) and Cosine (TP42).

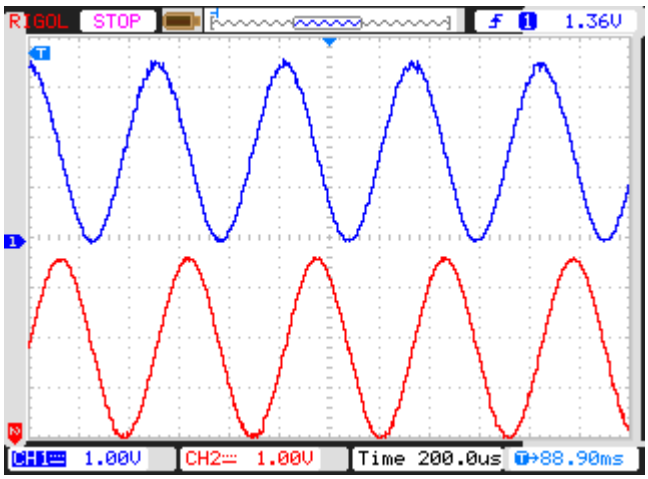

CH1: TP42 CH2: TP43

Experiment 25

Objective:

- Study and analysis of I-Channel and Q-Channel Modulation.

Setup:

- TechBook Scientech 2808
- Power Supply
- Oscilloscope/DSO
- Test probe

Connection Diagram:

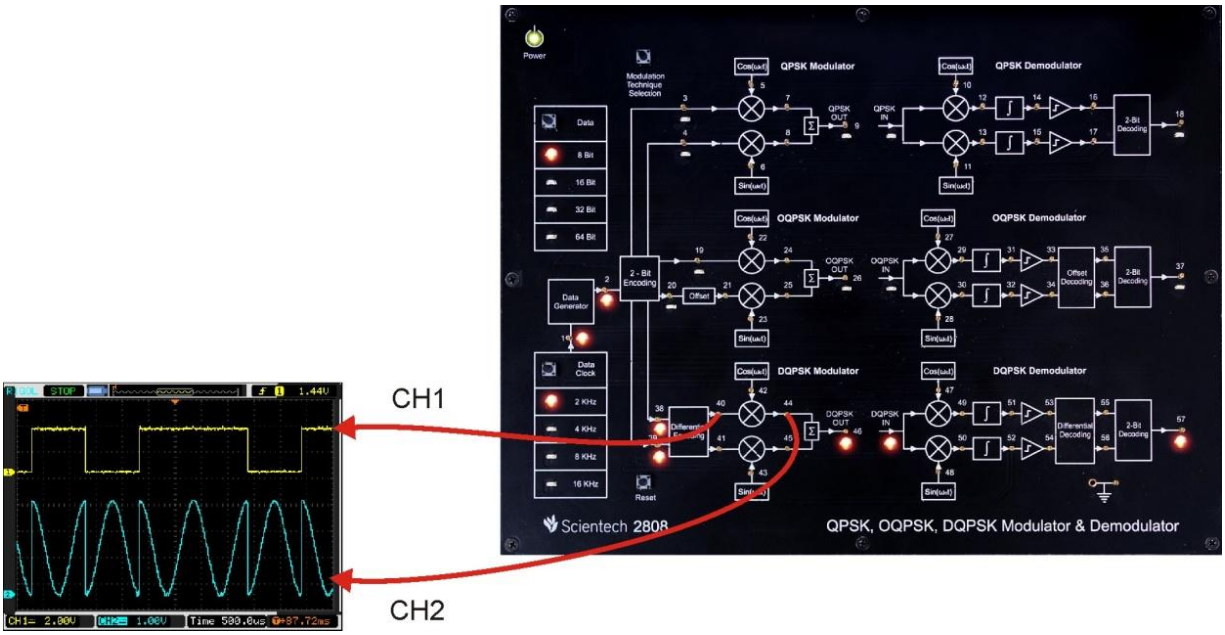

Procedure:

Step 1 : Connect and switch on the Power Supply of Scientech 2808

Step 2 : Select Differential Quadrature Phase Shift Keying Modulator using push button and LEDs of corresponding technique will glow.

Step 3 : Select *bit pattern* using push button i.e. 8 bit, 16 bit, 32 bit and 64 bit. And respective LED will glow. Observe the bit pattern on test point (TP2).

Step 4 : Select *data rate* using push button i.e. 2 KHz, 4KHz, 8 KHz and 16 KHz. Observe the change in frequency on test point (TP1).

Step 5 : Observe the 2-bit encoding i.e., I-Channel (TP38) and Q-Channel (TP39).

Step 6 : Observe Carrier Signal i.e., Sine (TP43) and Cosine (TP42), Frequency of Carrier signal will change wrt data rate.

Scientech 2808

Observation:

- Observe the input bit pattern at TP2 by varying bit pattern using respective push button.
- Observe the data rate at TP1 by varying data rate using push button.
- Observe the I-Channel (TP38) and Q-Channel (TP39).
- Observe the Differential encoded output of I-Channel at TP40 and Q-Channel TP41.
- Observe Carrier Signal i.e., Sine (TP43) and Cosine (TP42).
- Observe I-Channel (TP44) and Q-Channel (TP45) Modulated Signal.

Data Bit	Data Rate	DSO Results
8 Bit	8 KHz	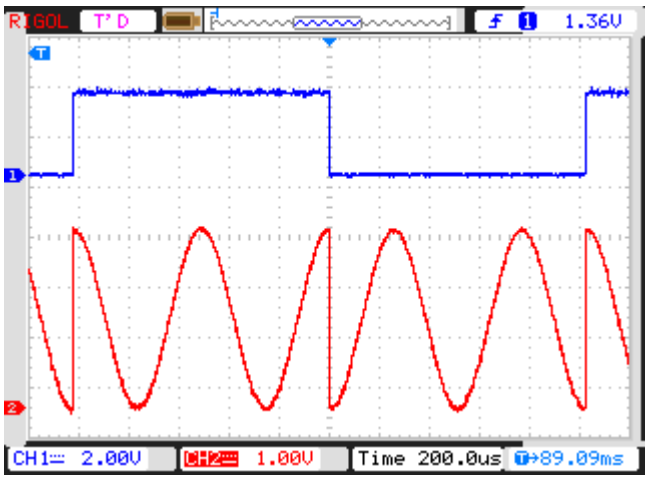 CH1: TP40 CH2: TP44
32 Bit	4 KHz	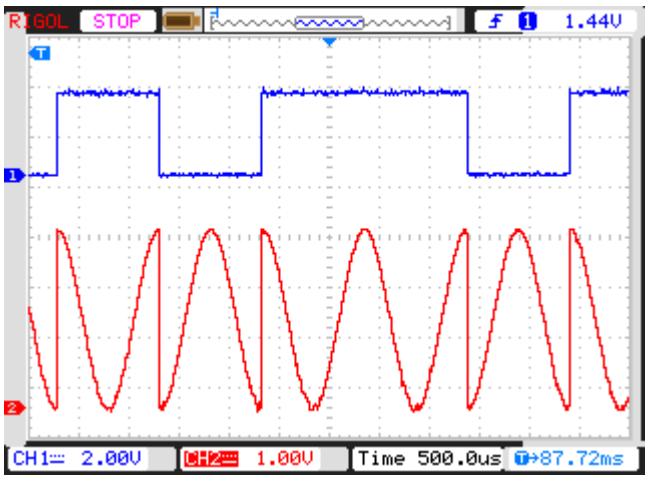 CH1: TP40 CH2: TP44

Scientech 2808

64 Bit	2 KHz	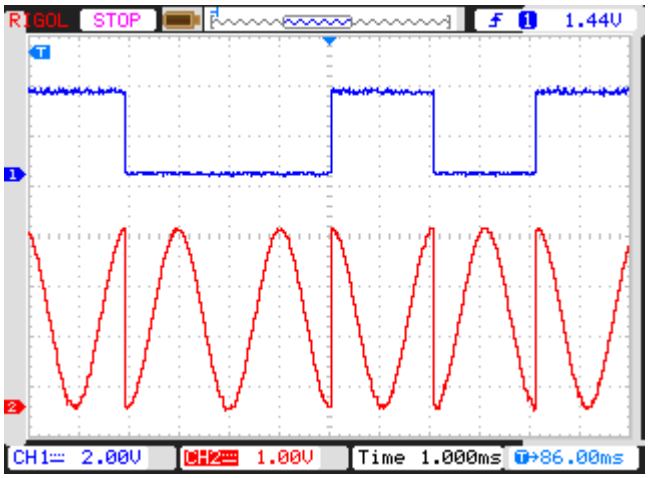 CH1: TP40 CH2: TP44
8 Bit	8 KHz	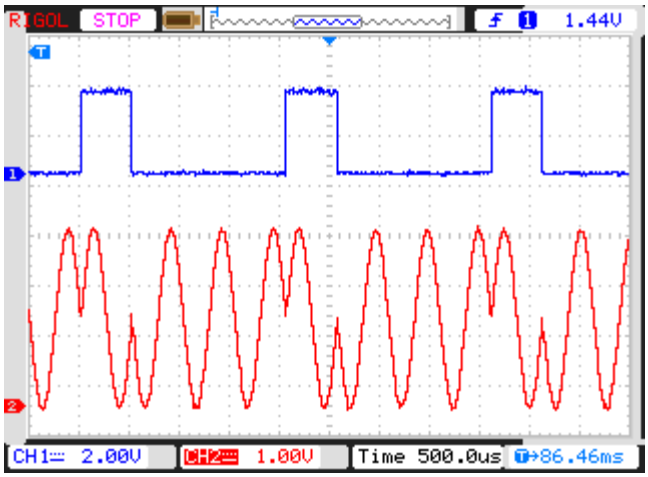 CH1: TP41 CH2: TP45
32 Bit	4 KHz	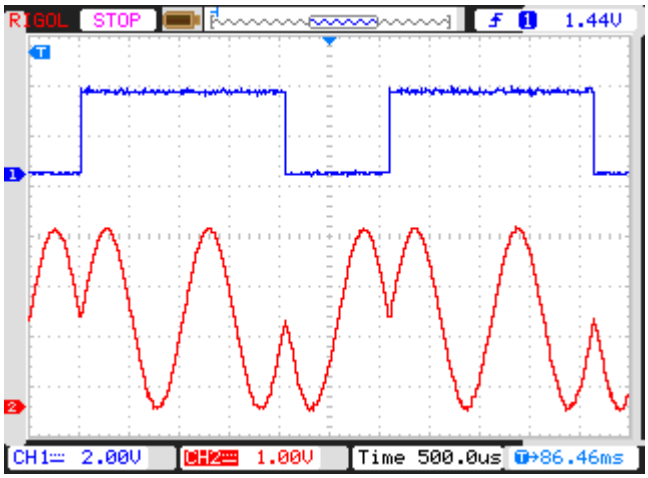 CH1: TP41 CH2: TP45

Scientech 2808

64 Bit	2 KHz	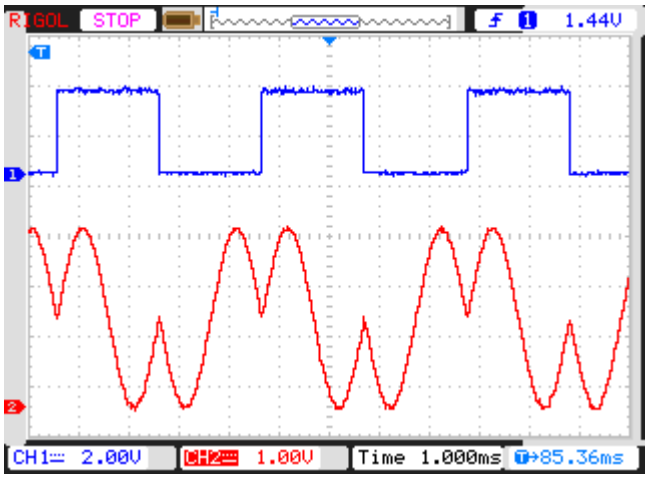 CH1: TP41 CH2: TP45

Experiment 26

Objective:

- Study and analysis of DQPSK Modulation.

Setup:

- TechBook Scientech 2808
- Power Supply
- Oscilloscope/DSO
- Test probe

Connection Diagram:

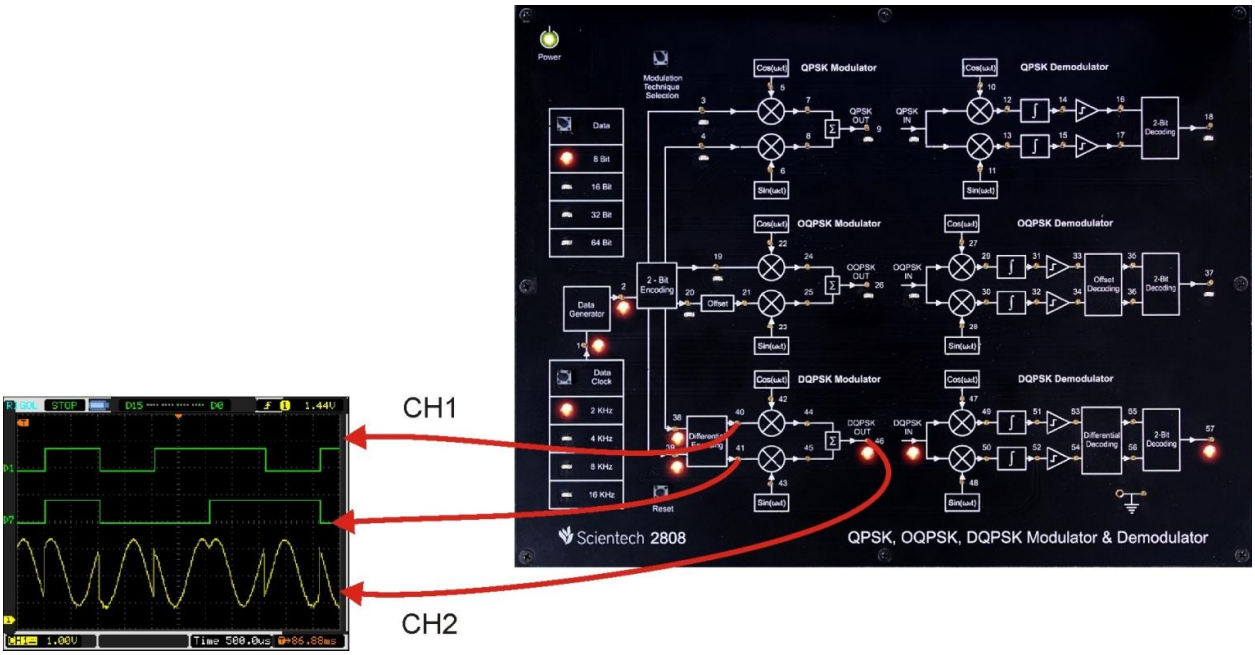

Procedure:

Step 1 : Connect and switch on the Power Supply of Scientech 2808

Step 2 : Select Differential Quadrature Phase Shift Keying Modulator using push button and LEDs of corresponding technique will glow.

Step 3 : Select *bit pattern* using push button i.e. 8 bit, 16 bit, 32 bit and 64 bit. And respective LED will glow. Observe the bit pattern on test point (TP2).

Step 4 : Select *data rate* using push button i.e. 2 KHz, 4KHz, 8 KHz and 16 KHz. Observe the change in frequency on test point (TP1).

Step 5 : Observe the 2-bit encoding i.e., I-Channel (TP38) and Q-Channel (TP39).

Step 6 : Observe Carrier Signal i.e., Sine (TP43) and Cosine (TP42), Frequency of Carrier signal will change wrt data rate.

Observation:

- Observe the input bit pattern at TP2 by varying bit pattern using respective push button.
- Observe the data rate at TP1 by varying data rate using push button.
- Observe the I-Channel (TP38) and Q-Channel (TP39).
- Observe the Differential encoded output of I-Channel at TP40 and Q-Channel TP41.
- Observe Carrier Signal i.e., Sine (TP43) and Cosine (TP42).
- Observe I-Channel (TP44) and Q-Channel (TP45) Modulated Signal.
- Observe DQPSK Modulated Signal at TP46.

Data Bit	Data Rate	DSO Results
8 Bit	8 KHz	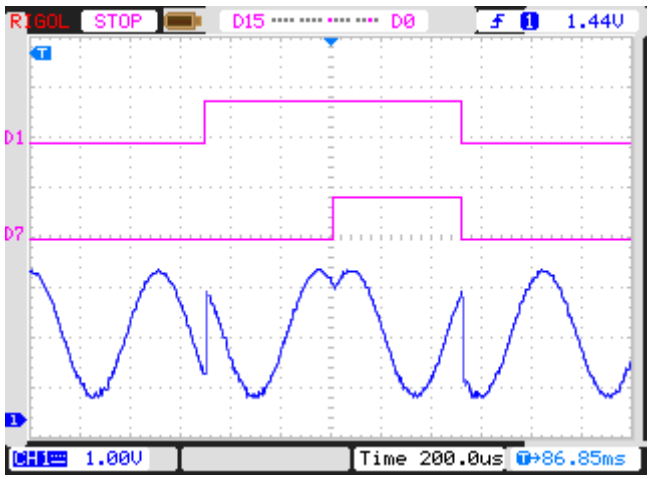 D1: TP40 D7: TP41 CH1:TP46

Scientech 2808

32 Bit	4 KHz	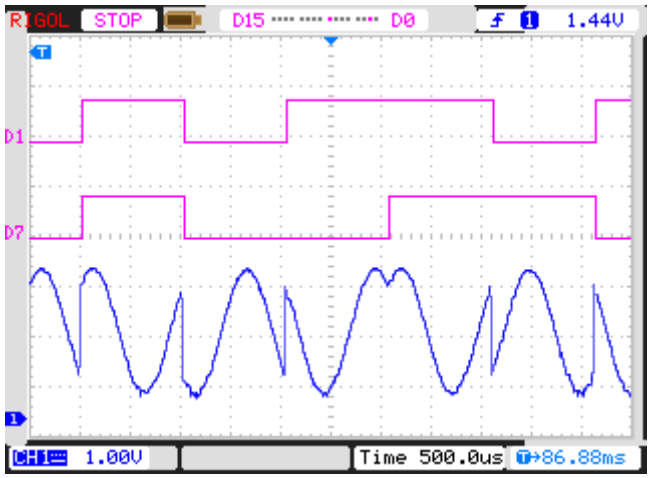 D1: TP40 D7: TP41 CH1:TP46
64 Bit	2 KHz	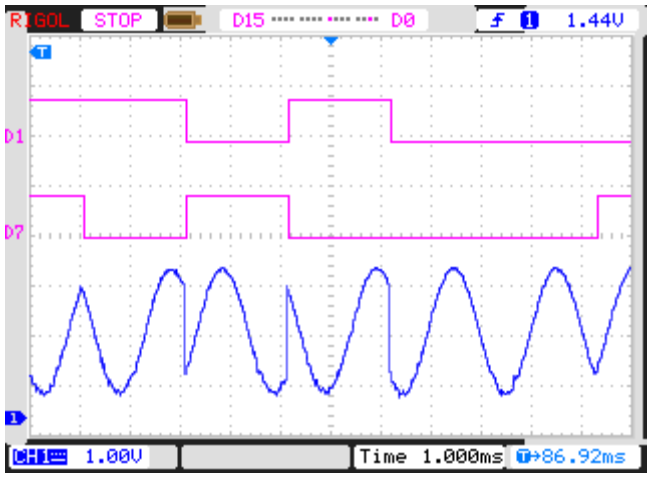 D1: TP40 D7: TP41 CH1:TP46

Experiment 27

Objective:

- Study and analysis of Complex Multiplier output.

Setup:

- TechBook Scientech 2808
- Power Supply
- Oscilloscope/DSO
- Test probe

Connection Diagram:

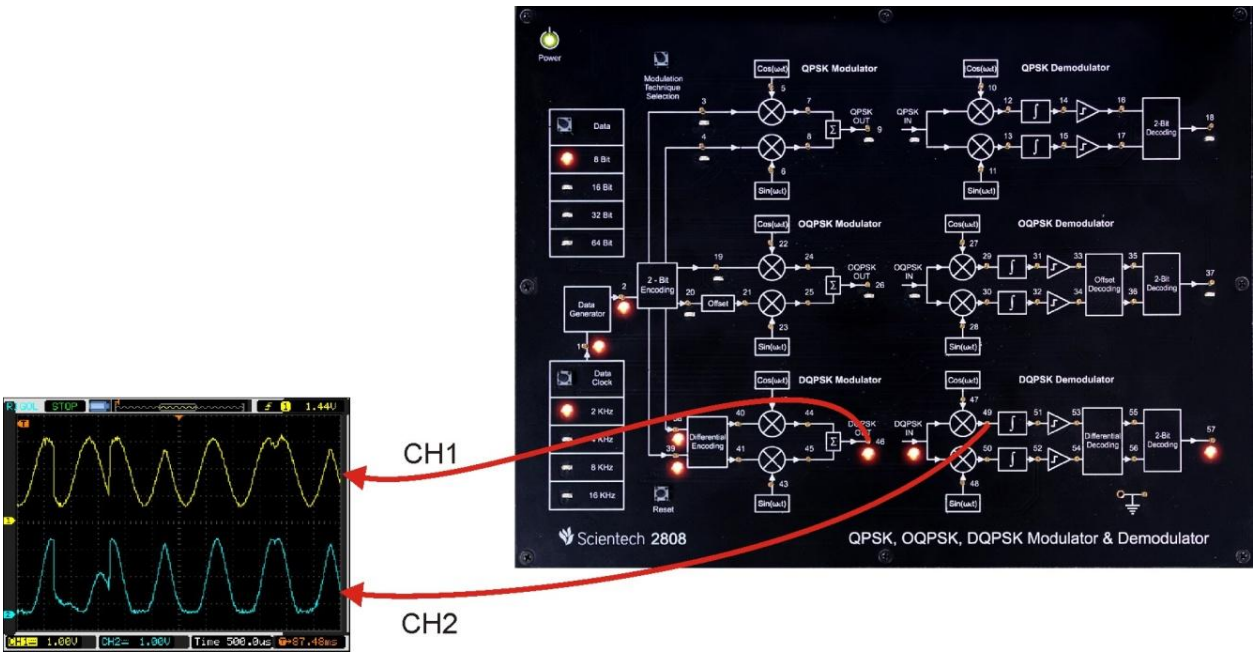

Procedure:

Step 1 : Connect and switch on the Power Supply of Scientech 2808

Step 2 : Select Differential Quadrature Phase Shift Keying Modulator using push button and LEDs of corresponding technique will glow.

Step 3 : Select *bit pattern* using push button i.e. 8 bit, 16 bit, 32 bit and 64 bit. And respective LED will glow. Observe the bit pattern on test point (TP2).

Step 4 : Select *data rate* using push button i.e. 2 KHz, 4KHz, 8 KHz and 16 KHz. Observe the change in frequency on test point (TP1).

Step 5 : Observe the 2-bit encoding i.e., I-Channel (TP38) and Q-Channel (TP39).

Step 6 : Observe Carrier Signal i.e., Sine (TP43) and Cosine (TP42), Frequency of Carrier signal will change wrt data rate.

Observation:

- Observe the input bit pattern at TP2 by varying bit pattern using respective push button.
- Observe the data rate at TP1 by varying data rate using push button.
- Observe the I-Channel (TP38) and Q-Channel (TP39).
- Observe the Differential encoded output of I-Channel at TP40 and Q-Channel TP41.
- Observe Carrier Signal i.e., Sine (TP43) and Cosine (TP42).
- Observe I-Channel (TP44) and Q-Channel (TP45) Modulated Signal.
- Observe OQPSK Modulated Signal at TP46.
- Observe the multiplied Signal of DQPSK modulated signal and carrier signal Cosine at TP49 & DQPSK modulated signal and carrier signal Sine at TP50.

Data Bit	Data Rate	DSO Results
32 Bit	4 KHz	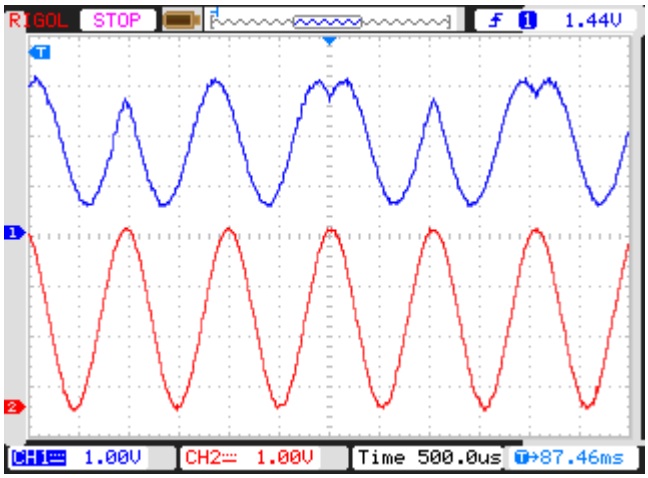 CH1: TP46 CH2:TP47
64 Bit	2 KHz	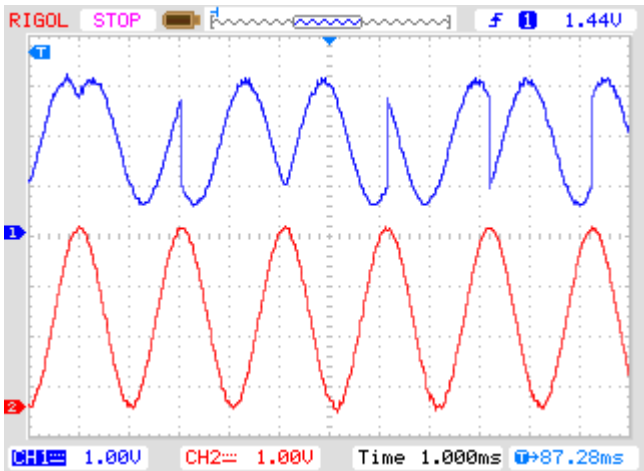 CH1: TP46 CH2:TP47

Scientech 2808

32 Bit	4 KHz	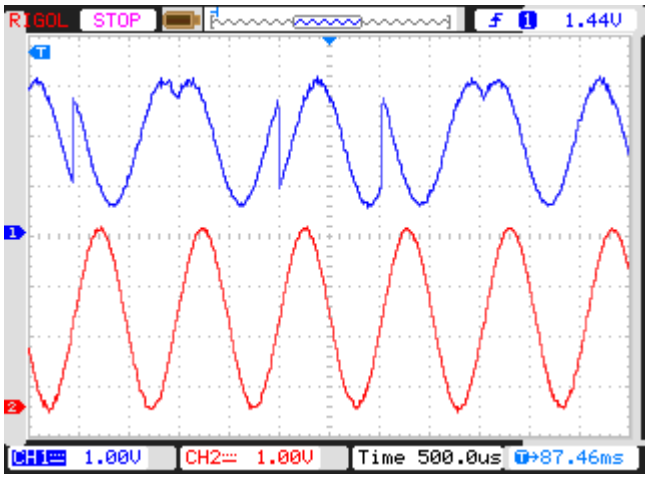 CH1: TP46 CH2:TP48
64 Bit	2 KHz	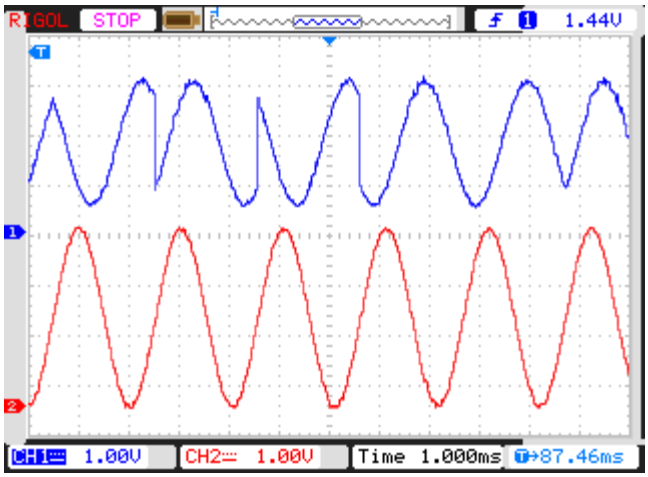 CH1: TP46 CH2:TP48
32 Bit	4 KHz	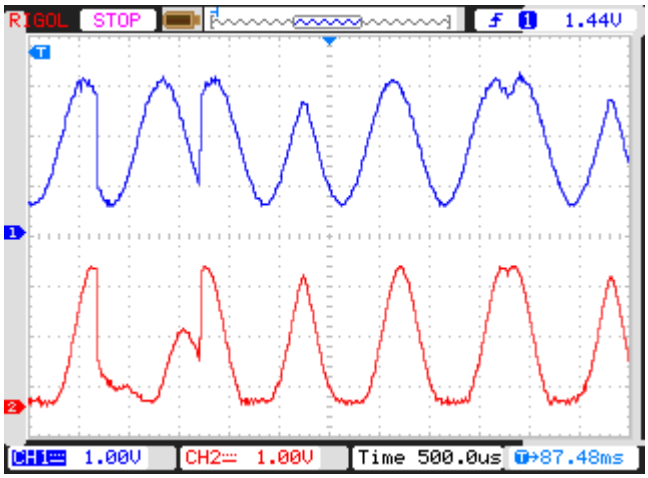 CH1: TP46 CH2:TP49

Scientech 2808

64 Bit	2 KHz	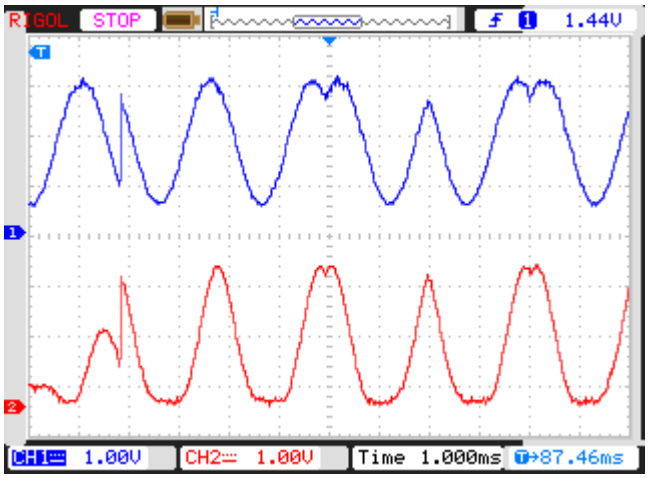 CH1: TP46 CH2:TP49
32 Bit	4 KHz	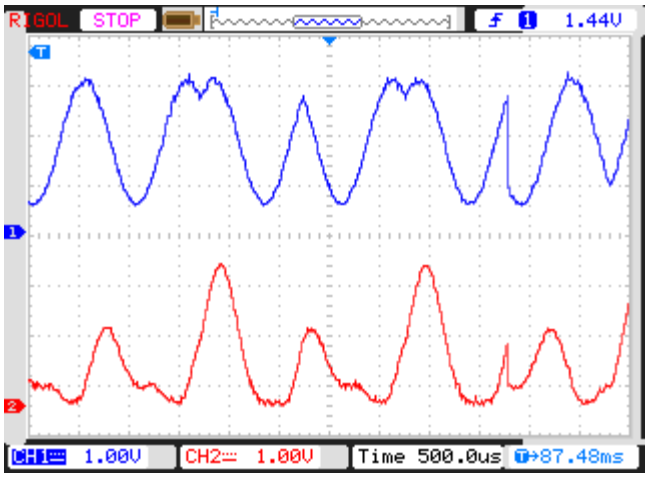 CH1: TP46 CH2:TP50
64 Bit	2 KHz	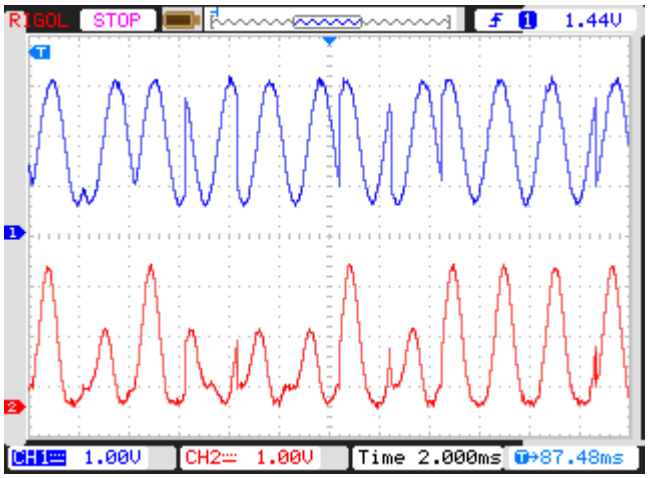 CH1: TP46 CH2:TP50

Scientech 2808

32 Bit	4 KHz	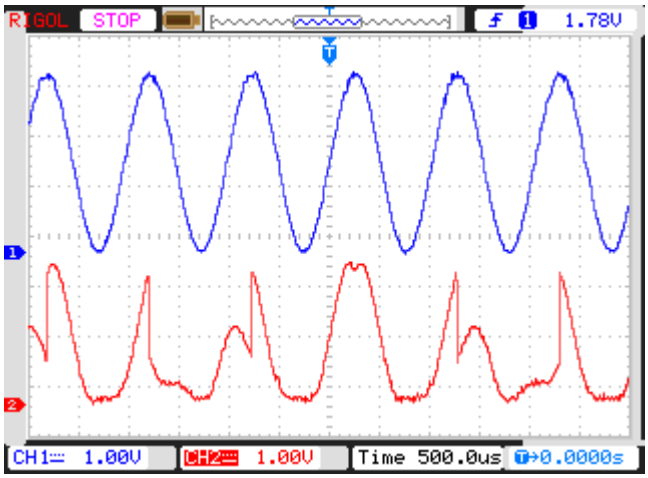 CH1: TP47 CH2:TP49
64 Bit	2 KHz	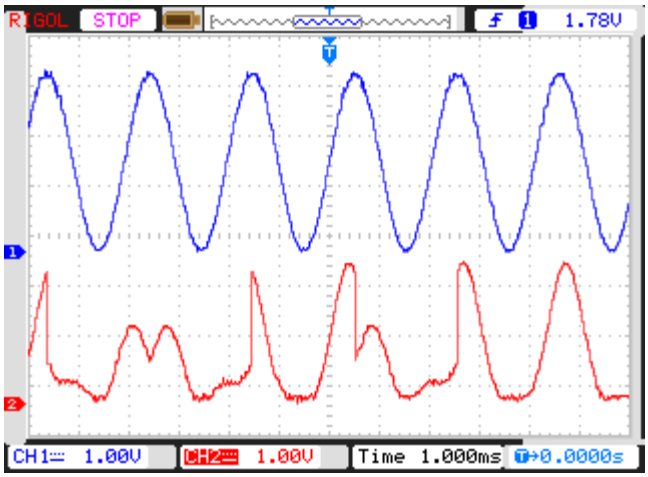 CH1: TP47 CH2:TP49
32 Bit	4 KHz	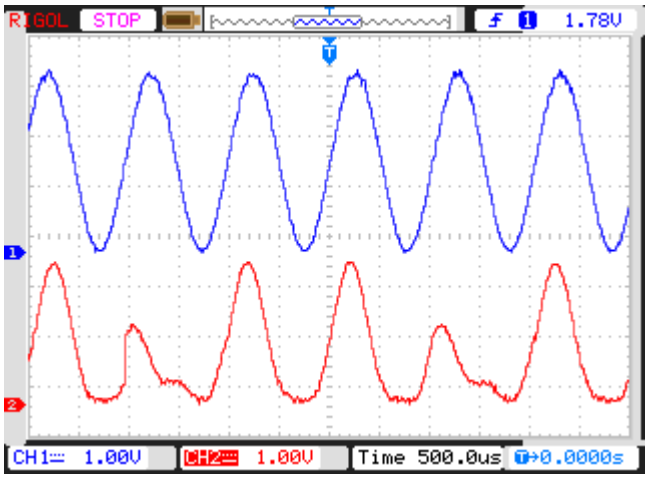 CH1: TP48 CH2:TP50

Scientech 2808

64 Bit	2 KHz	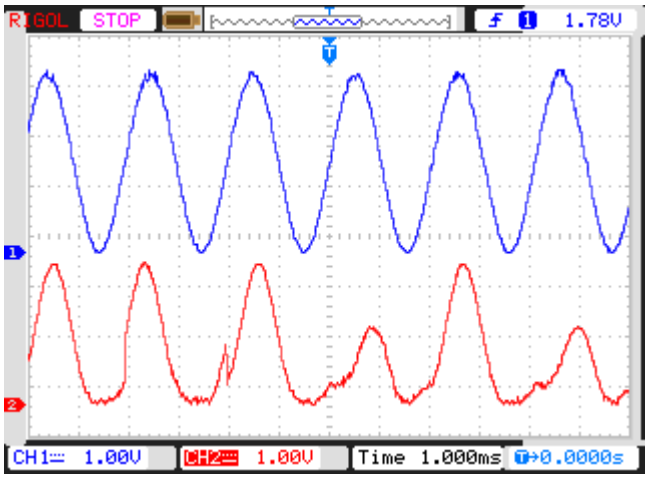 CH1: TP48 CH2:TP50

Experiment 28

Objective:

- Study and analysis of Integrator output.

Setup:

- TechBook Scientech 2808
- Power Supply
- Oscilloscope/DSO
- Test probe

Connection Diagram:

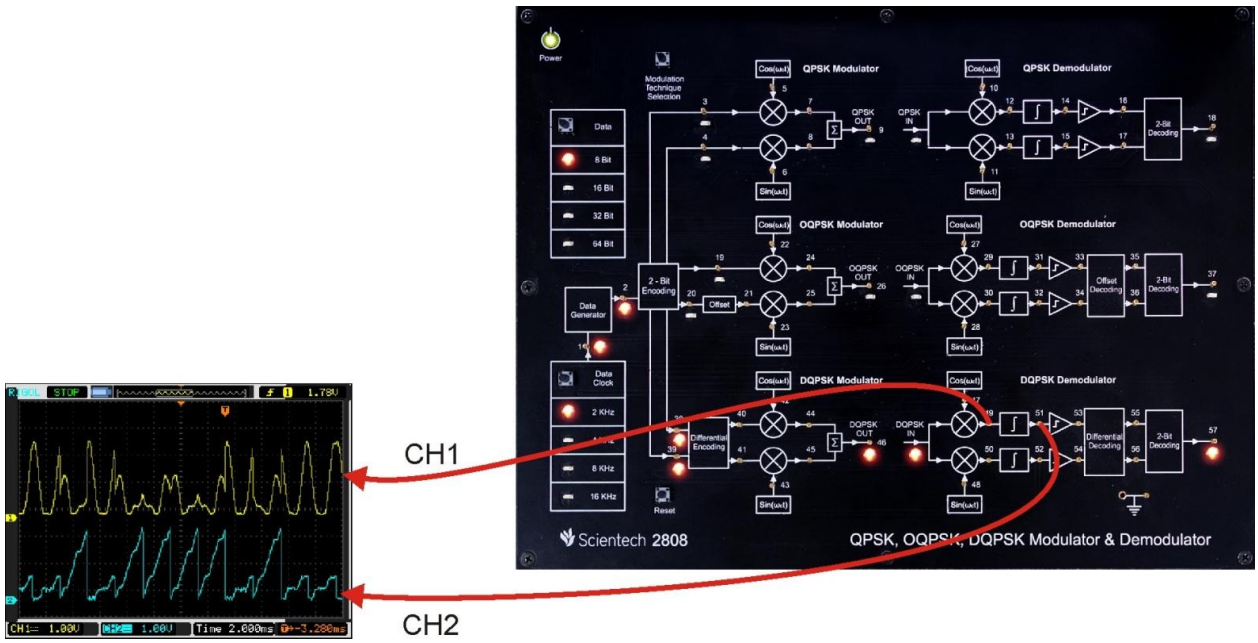

Procedure:

Step 1 : Connect and switch on the Power Supply of Scientech 2808

Step 2 : Select Differential Quadrature Phase Shift Keying Modulator using push button and LEDs of corresponding technique will glow.

Step 3 : Select *bit pattern* using push button i.e. 8 bit, 16 bit, 32 bit and 64 bit. And respective LED will glow. Observe the bit pattern on test point (TP2).

Step 4 : Select *data rate* using push button i.e. 2 KHz, 4KHz, 8 KHz and 16 KHz. Observe the change in frequency on test point (TP1).

Step 5 : Observe the 2-bit encoding i.e., I-Channel (TP38) and Q-Channel (TP39).

Step 6 : Observe Carrier Signal i.e., Sine (TP43) and Cosine (TP42), Frequency of Carrier signal will change wrt data rate.

Observation:

- Observe the input bit pattern at TP2 by varying bit pattern using respective push button.
- Observe the data rate at TP1 by varying data rate using push button.
- Observe the I-Channel (TP38) and Q-Channel (TP39).
- Observe the Differential encoded output of I-Channel at TP40 and Q-Channel TP41.
- Observe Carrier Signal i.e., Sine (TP43) and Cosine (TP42).
- Observe I-Channel (TP44) and Q-Channel (TP45) Modulated Signal.
- Observe OQPSK Modulated Signal at TP46.
- Observe the multiplied Signal of DQPSK modulated signal and carrier signal Cosine at TP49 & DQPSK modulated signal and carrier signal Sine at TP50.
- Observe the integrated output of I-Channel TP51 and Q-Channel TP52.

Data Bit	Data Rate	DSO Results
32 Bit	4 KHz	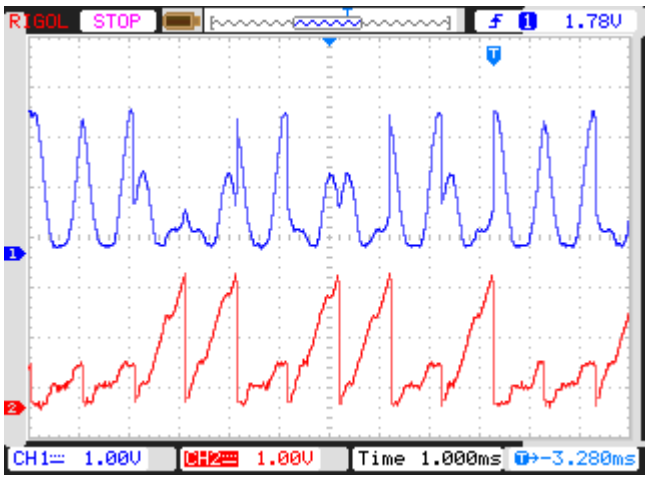 CH1: TP49 CH2:TP51
64 Bit	2 KHz	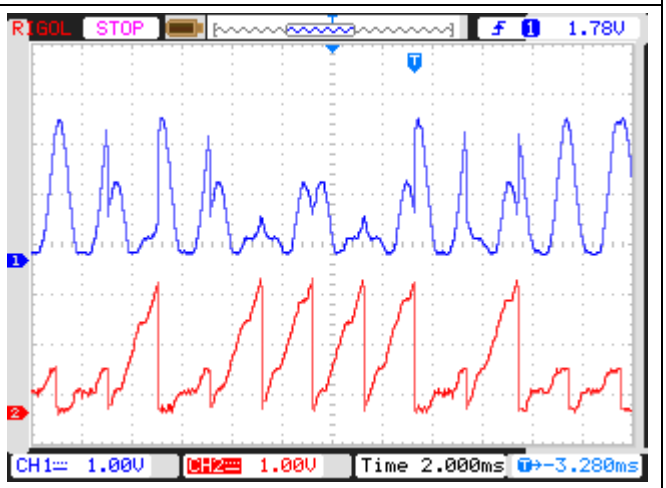

Scientech 2808

		CH1: TP49 CH2:TP51
32 Bit	4 KHz	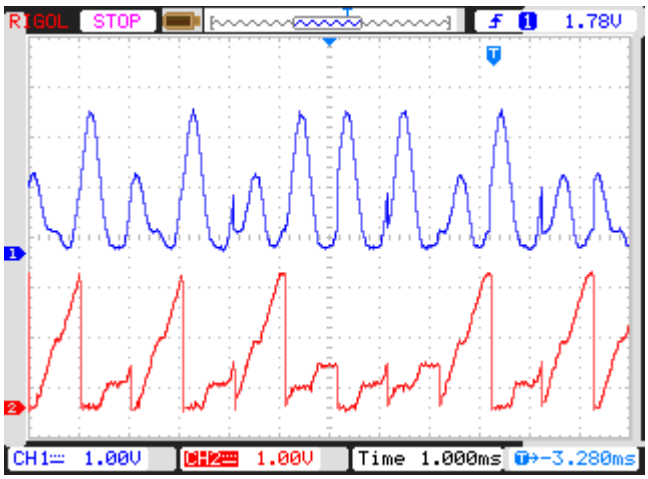 CH1: TP50 CH2:TP52
64 Bit	2 KHz	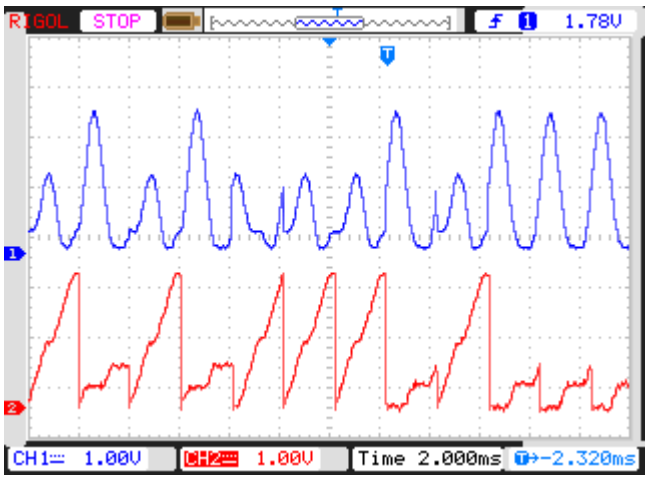 CH1: TP50 CH2:TP52

Experiment 29

Objective:

Study and analysis of Comparator output

Setup:

- TechBook Scientech 2808
- Power Supply
- Oscilloscope/DSO
- Test probe

Connection Diagram:

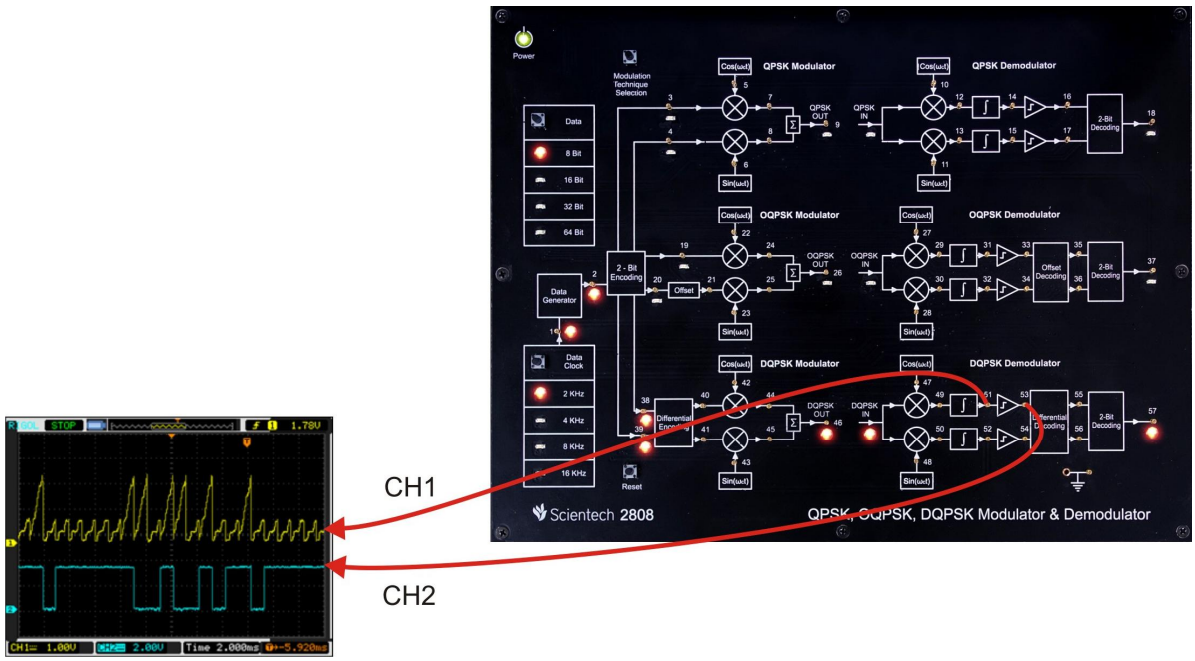

Procedure:

Step 1 : Connect and switch on the Power Supply of Scientech 2808

Step 2 : Select Differential Quadrature Phase Shift Keying Modulator using push button and LEDs of corresponding technique will glow.

Step 3 : Select *bit pattern* using push button i.e. 8 bit, 16 bit, 32 bit and 64 bit. And respective LED will glow. Observe the bit pattern on test point (TP2).

Step 4 : Select *data rate* using push button i.e. 2 KHz, 4KHz, 8 KHz and 16 KHz. Observe the change in frequency on test point (TP1).

Step 5 : Observe the 2-bit encoding i.e., I-Channel (TP38) and Q-Channel (TP39).

Step 6 : Observe Carrier Signal i.e., Sine (TP43) and Cosine (TP42), Frequency of Carrier signal will change wrt data rate.

Observation:

- Observe the input bit pattern at TP2 by varying bit pattern using respective push button.
- Observe the data rate at TP1 by varying data rate using push button.
- Observe the I-Channel (TP38) and Q-Channel (TP39).
- Observe the Differential encoded output of I-Channel at TP40 and Q-Channel TP41.
- Observe Carrier Signal i.e., Sine (TP43) and Cosine (TP42).
- Observe I-Channel (TP44) and Q-Channel (TP45) Modulated Signal.
- Observe OQPSK Modulated Signal at TP46.
- Observe the multiplied Signal of DQPSK modulated signal and carrier signal Cosine at TP49 & DQPSK modulated signal and carrier signal Sine at TP50.
- Observe the integrated output of I-Channel TP51 and Q-Channel TP52.
- Observe the comparator output of I-Channel at TP53 and Q-Channel TP54 that is same as at input with delay.

Data Bit	Data Rate	DSO Results
32 Bit	4 KHz	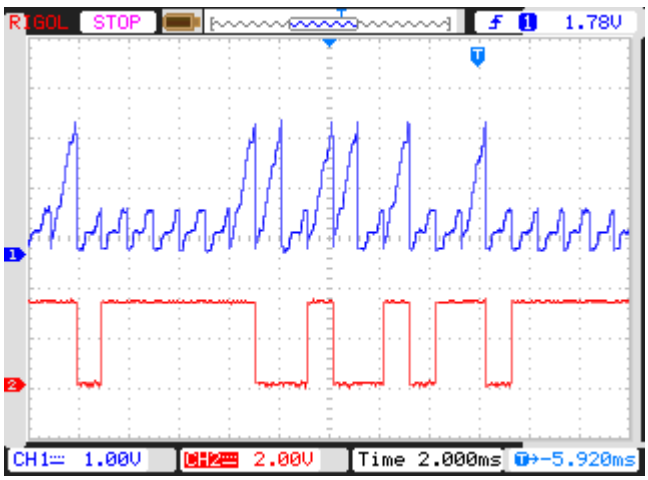 CH1: TP51 CH2:TP53

Scientech 2808

32 Bit	4 KHz	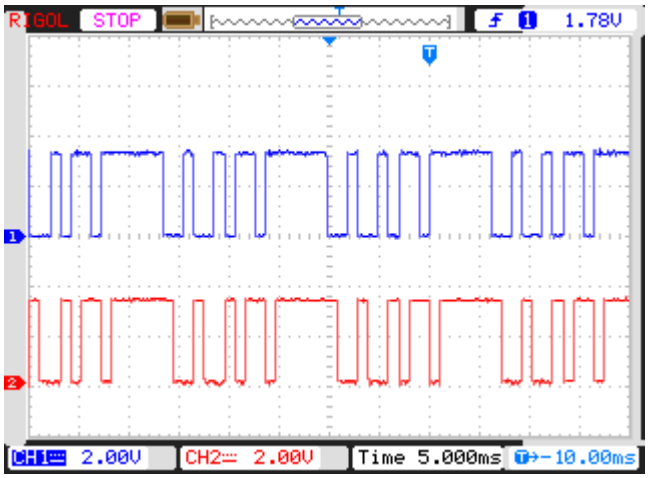 CH1: TP40 CH2:TP53
64 Bit	2 KHz	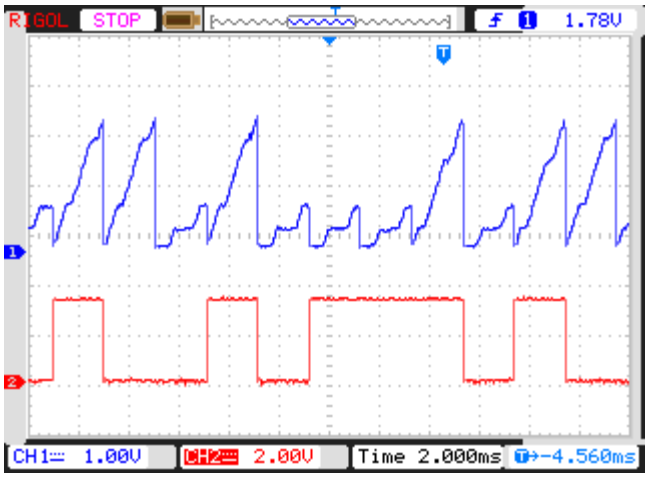 CH1: TP51 CH2:TP53
64 Bit	2 KHz	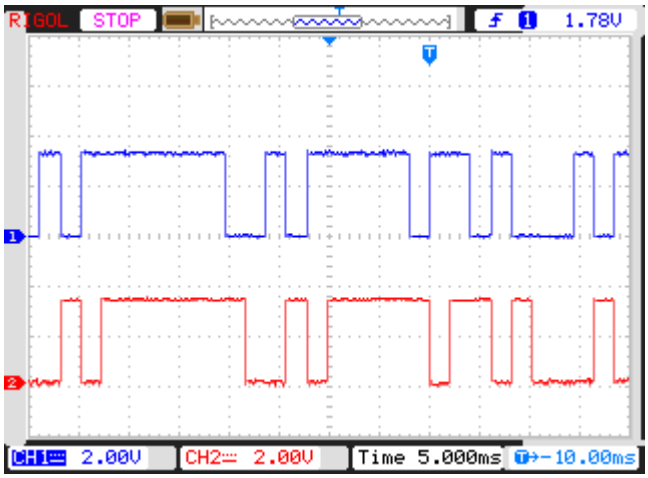 CH1: TP40 CH2:TP53

Scientech 2808

32 Bit	4 KHz	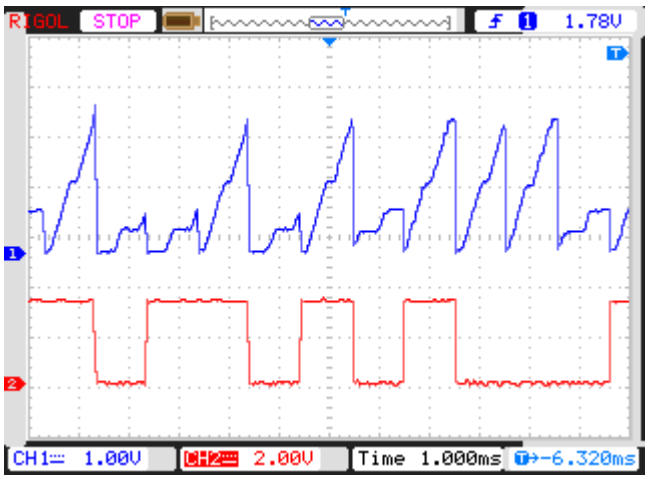 CH1: TP52 CH2:TP54
32 Bit	4 KHz	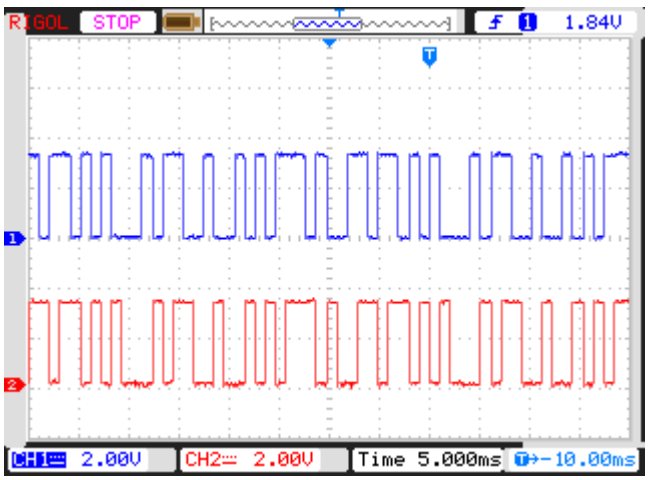 CH1: TP41 CH2:TP54

Scientech 2808

64 Bit	2 KHz	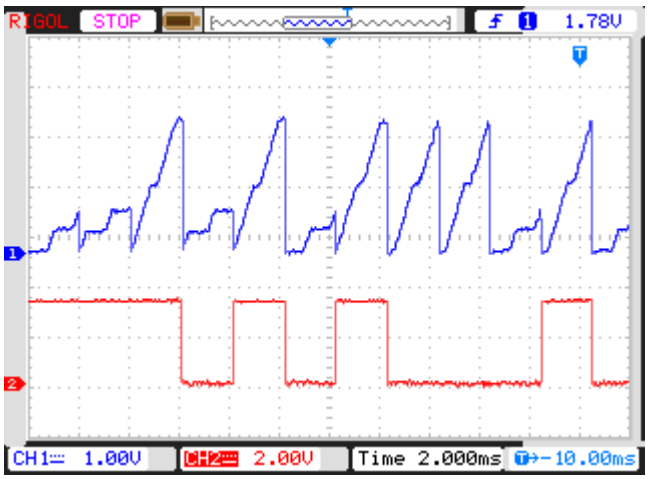 CH1: TP52 CH2:TP54
64 Bit	2 KHz	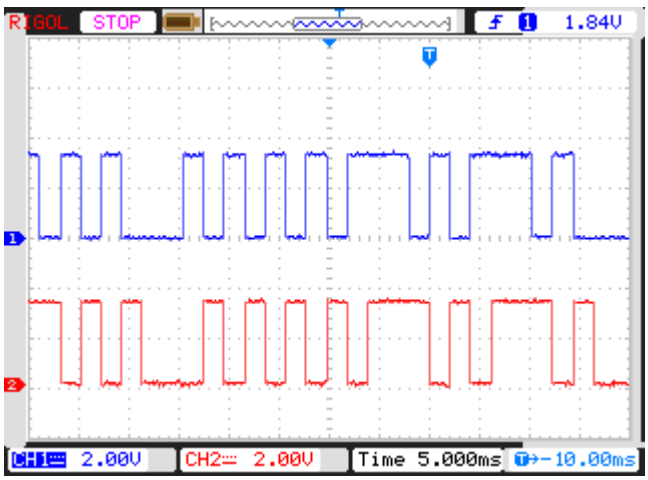 CH1: TP41 CH2:TP54

Experiment 30

Objective:

- Study and analysis of differential Decoding Output.

Setup:

- TechBook Scientech 2808
- Power Supply
- Oscilloscope/DSO
- Test probe

Connection Diagram:

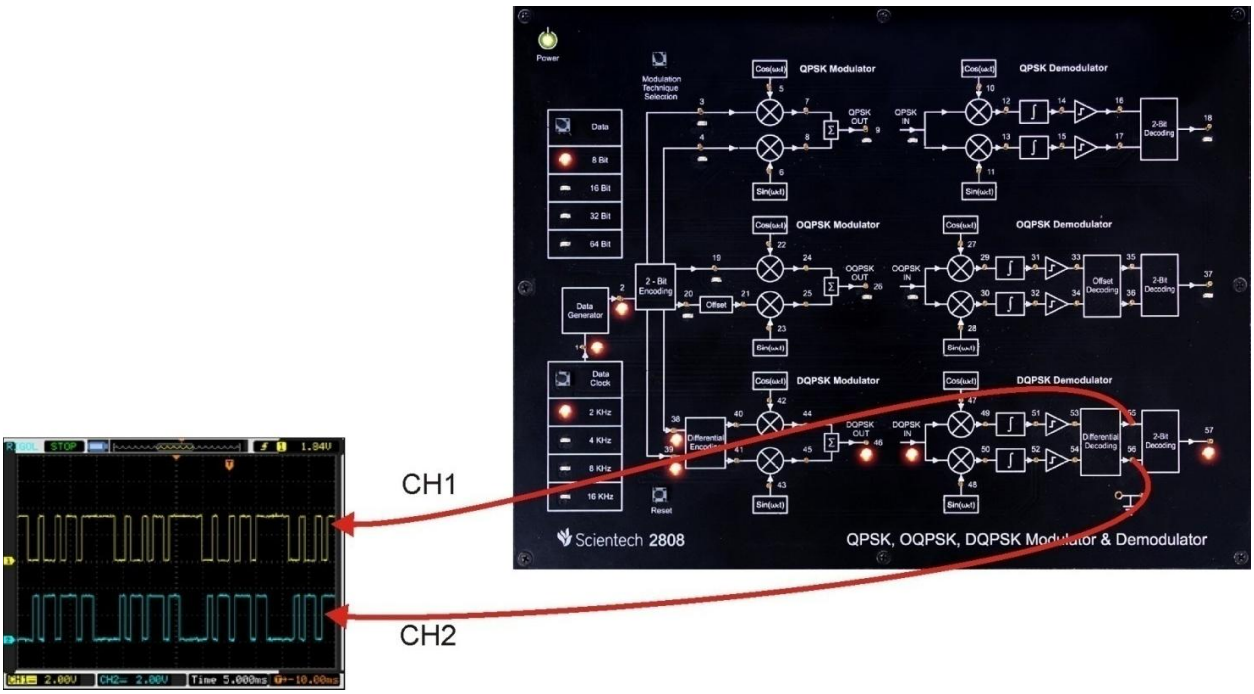

Procedure:

Step 1 : Connect and switch on the Power Supply of Scientech 2808

Step 2 : Select Differential Quadrature Phase Shift Keying Modulator using push button and LEDs of corresponding technique will glow.

Step 3 : Select *bit pattern* using push button i.e. 8 bit, 16 bit, 32 bit and 64 bit. And respective LED will glow. Observe the bit pattern on test point (TP2).

Step 4 : Select *data rate* using push button i.e. 2 KHz, 4KHz, 8 KHz and 16 KHz. Observe the change in frequency on test point (TP1).

Step 5 : Observe the 2-bit encoding i.e., I-Channel (TP38) and Q-Channel (TP39).

Step 6 : Observe Carrier Signal i.e., Sine (TP43) and Cosine (TP42), Frequency of Carrier signal will change wrt data rate.

Observation:

- Observe the input bit pattern at TP2 by varying bit pattern using respective push button.
- Observe the data rate at TP1 by varying data rate using push button.
- Observe the I-Channel (TP38) and Q-Channel (TP39).
- Observe the Differential encoded output of I-Channel at TP40 and Q-Channel TP41.
- Observe Carrier Signal i.e., Sine (TP43) and Cosine (TP42).
- Observe I-Channel (TP44) and Q-Channel (TP45) Modulated Signal.
- Observe OQPSK Modulated Signal at TP46.
- Observe the multiplied Signal of DQPSK modulated signal and carrier signal Cosine at TP49 & DQPSK modulated signal and carrier signal Sine at TP50.
- Observe the integrated output of I-Channel TP51 and Q-Channel TP52.
- Observe the comparator output of I-Channel at TP53 and Q-Channel TP54 that is same as at input with delay.
- Observe the differential decoding output of I-Channel TP55 and Q-Channel TP56.

Data Bit	Data Rate	DSO Results
32 Bit	4 KHz	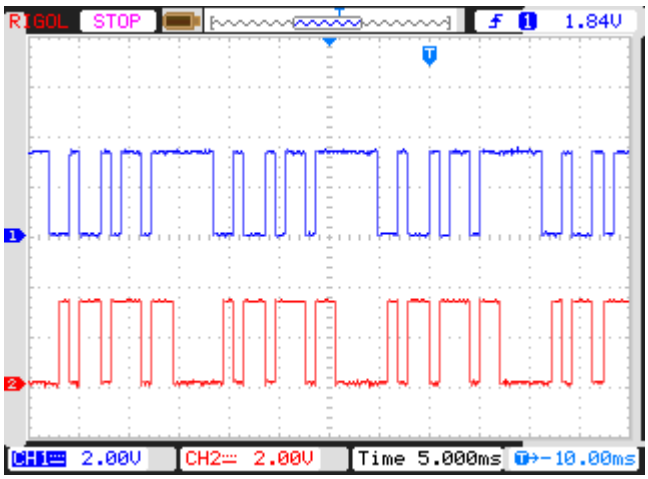 CH1: TP53 CH2:TP55

Scientech 2808

32 Bit	4 KHz	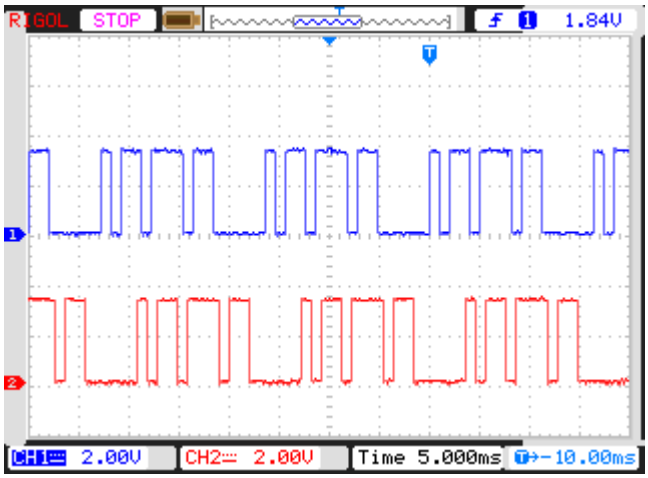 CH1: TP38 CH2:TP55
64 Bit	2 KHz	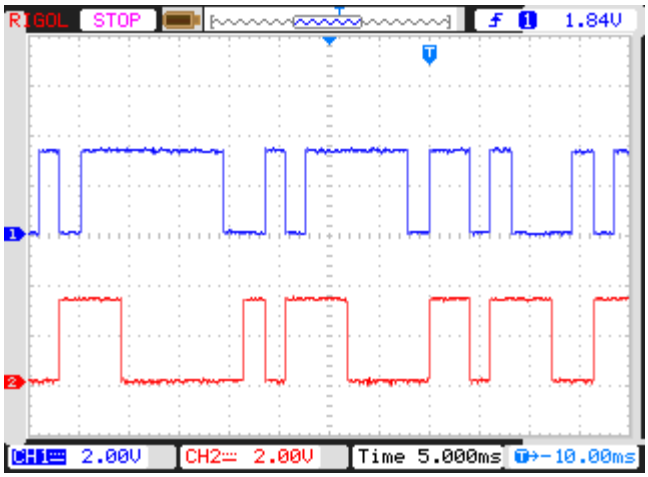 CH1: TP53 CH2:TP55
64 Bit	2 KHz	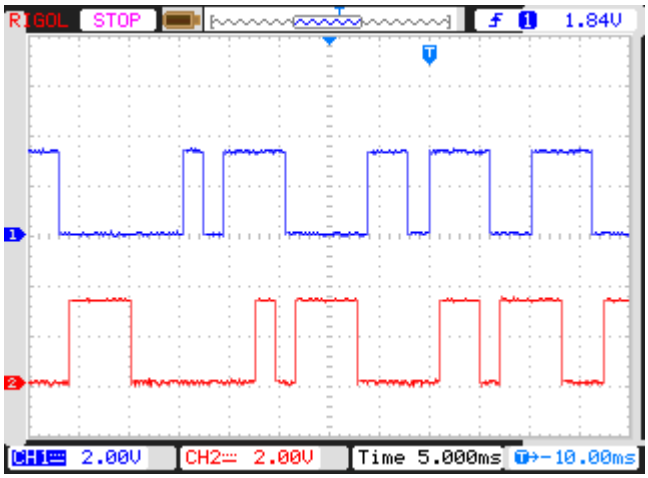 CH1: TP38 CH2:TP55

Scientech 2808

32 Bit	4 KHz	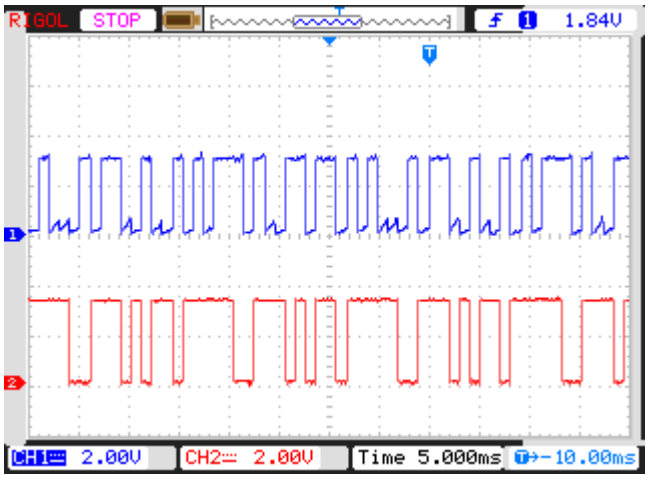 CH1: TP54 CH2:TP56
32 Bit	4 KHz	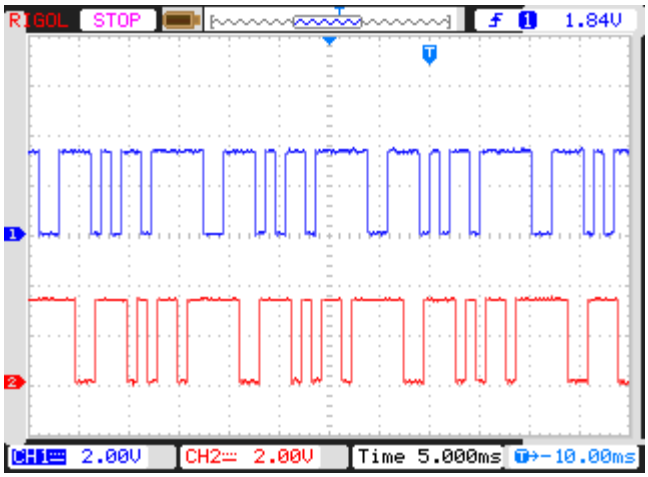 CH1: TP39 CH2:TP56
64 Bit	2 KHz	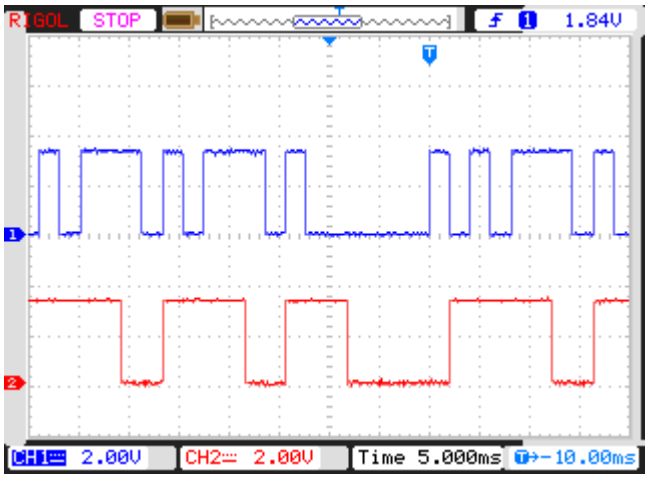 CH1: TP54 CH2:TP56

Scientech 2808

64 Bit	2 KHz	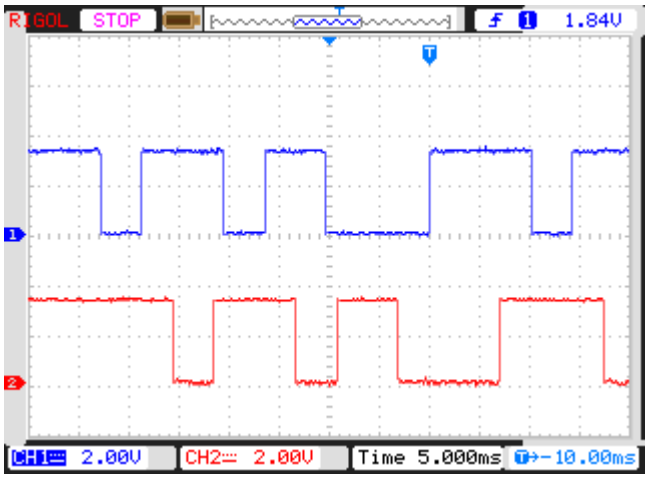 CH1: TP39 CH2:TP56

Experiment 31

Objective:

- Study and analysis of DQPSK Demodulated Output.

Setup:

- TechBook Scientech 2808
- Power Supply
- Oscilloscope/DSO
- Test probe

Connection Diagram:

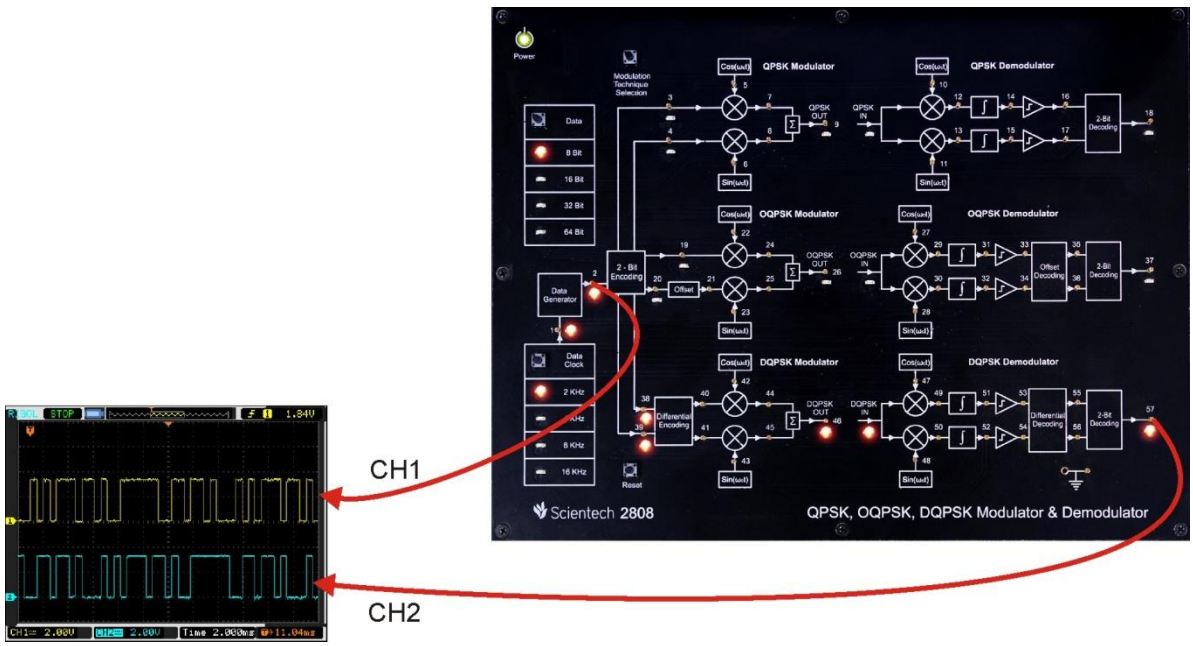

Procedure:

Step 1 : Connect and switch on the Power Supply of Scientech 2808

Step 2 : Select Differential Quadrature Phase Shift Keying Modulator using push button and LEDs of corresponding technique will glow.

Step 3 : Select *bit pattern* using push button i.e. 8 bit, 16 bit, 32 bit and 64 bit. And respective LED will glow. Observe the bit pattern on test point (TP2).

Step 4 : Select *data rate* using push button i.e. 2 KHz, 4KHz, 8 KHz and 16 KHz. Observe the change in frequency on test point (TP1).

Step 5 : Observe the 2-bit encoding i.e., I-Channel (TP38) and Q-Channel (TP39).

Step 6 : Observe Carrier Signal i.e., Sine (TP43) and Cosine (TP42), Frequency of Carrier signal will change wrt data rate.

Observation:

- Observe the input bit pattern at TP2 by varying bit pattern using respective push button.
- Observe the data rate at TP1 by varying data rate using push button.
- Observe the I-Channel (TP38) and Q-Channel (TP39).
- Observe the Differential encoded output of I-Channel at TP40 and Q-Channel TP41.
- Observe Carrier Signal i.e., Sine (TP43) and Cosine (TP42).
- Observe I-Channel (TP44) and Q-Channel (TP45) Modulated Signal.
- Observe OQPSK Modulated Signal at TP46.
- Observe the multiplied Signal of DQPSK modulated signal and carrier signal Cosine at TP49 & DQPSK modulated signal and carrier signal Sine at TP50.
- Observe the integrated output of I-Channel TP51 and Q-Channel TP52.
- Observe the comparator output of I-Channel at TP53 and Q-Channel TP54 that is same as at input with delay.
- Observe the differential decoding output of I-Channel TP55 and Q-Channel TP56.
- Observe the DQPSK Demodulated Signal at TP57.

Data Bit	Data Rate	DSO Results
32 Bit	4 KHz	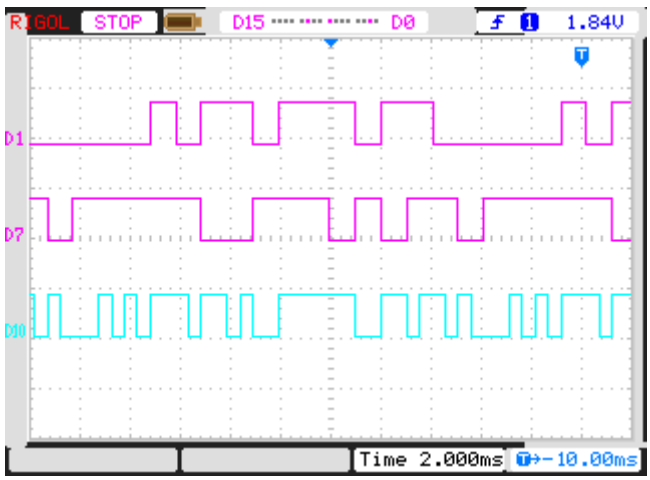 D1: TP55 D7:TP56 D10:TP57

Scientech 2808

32 Bit	4 KHz	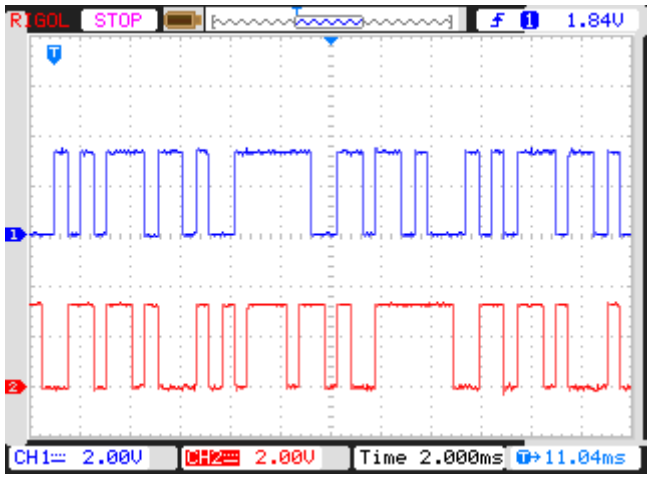 CH1:TP2 CH2:TP57
64 Bit	2 KHz	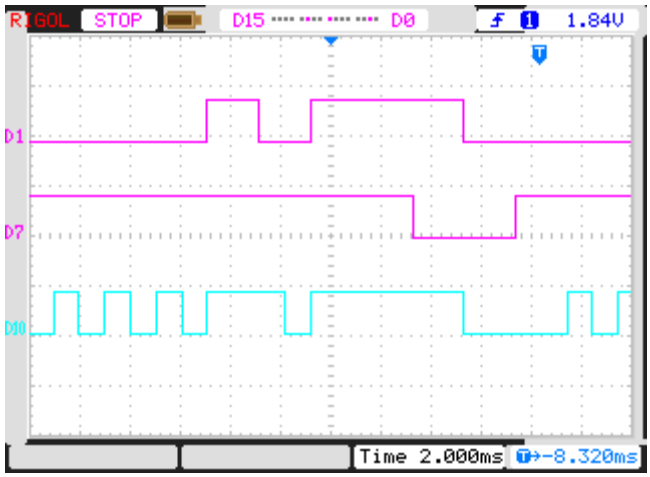 D1: TP55 D7:TP56 D10:TP57
64 Bit	2 KHz	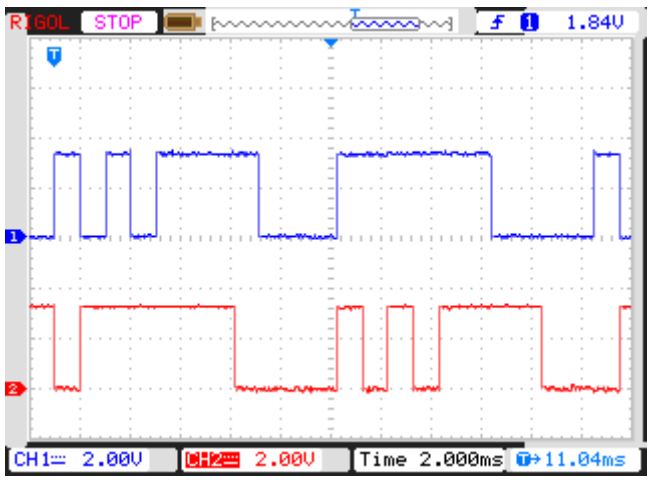 CH1:TP2 CH2:TP57

Case Study: 1

QPSK

Bit Pattern: 32 Bit

Data Rate: 2 kHz

QPSK Modulator:

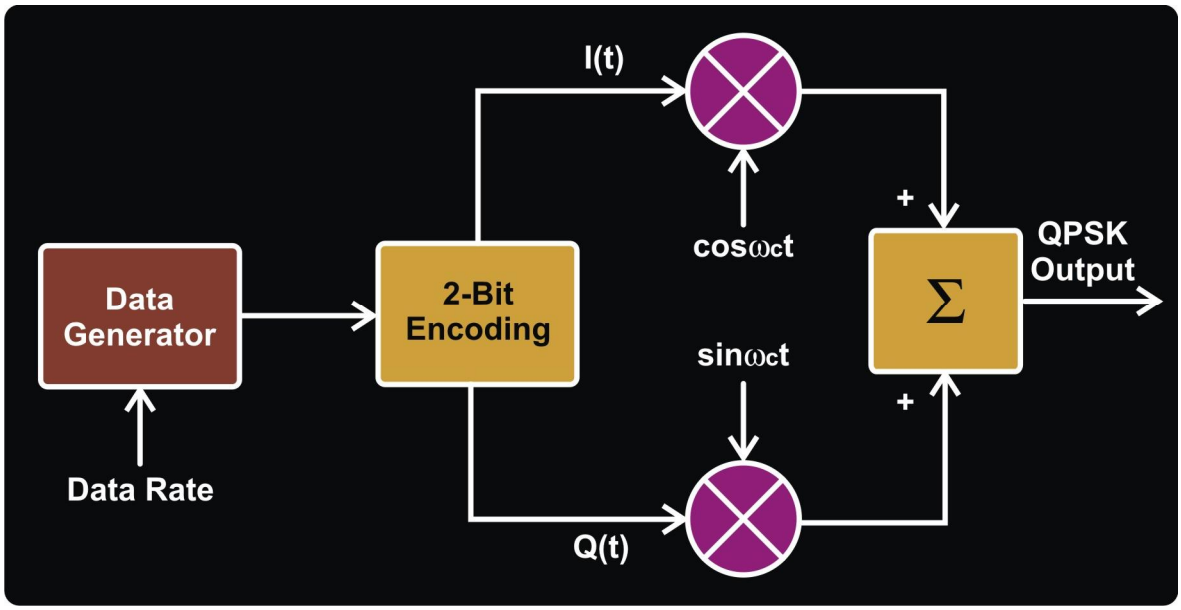

Observations:

Output at TP1 and TP2:

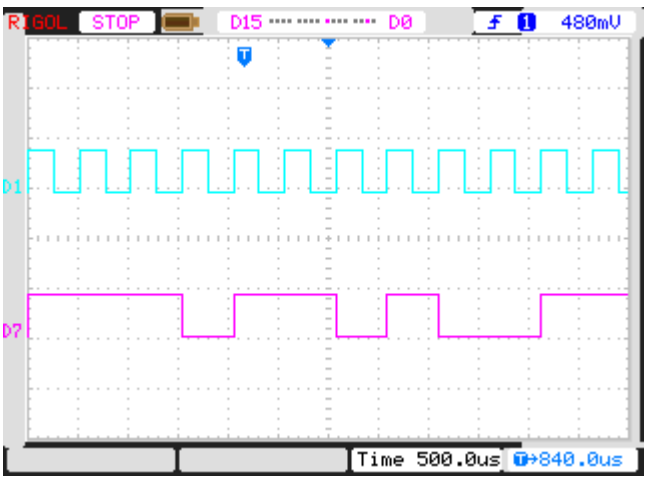

Scientech 2808

Output at TP1, TP2, TP3 & TP4

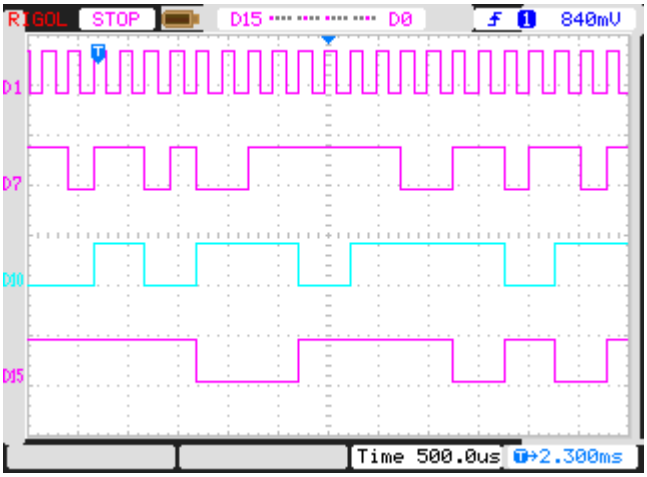

Output at TP5 & TP6:

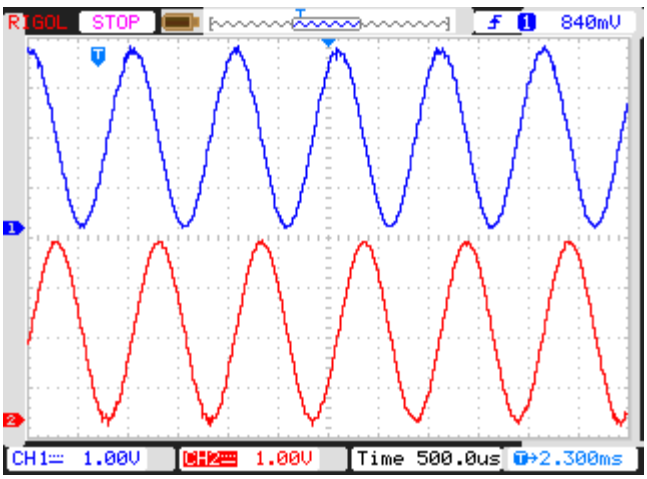

Scientech 2808

Output at TP3 & TP7:

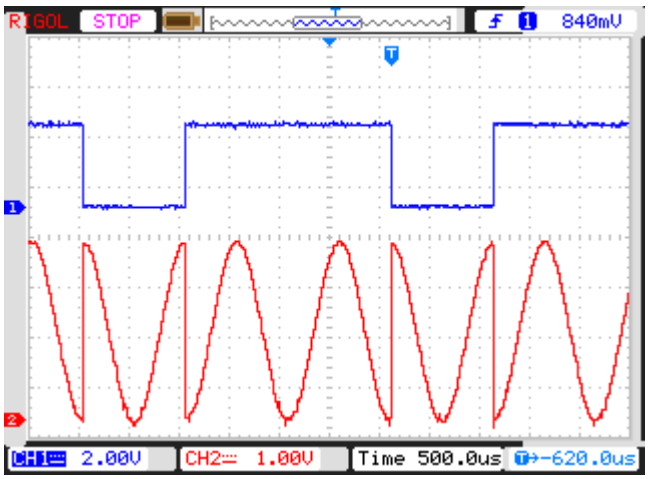

Output at TP4 & TP8:

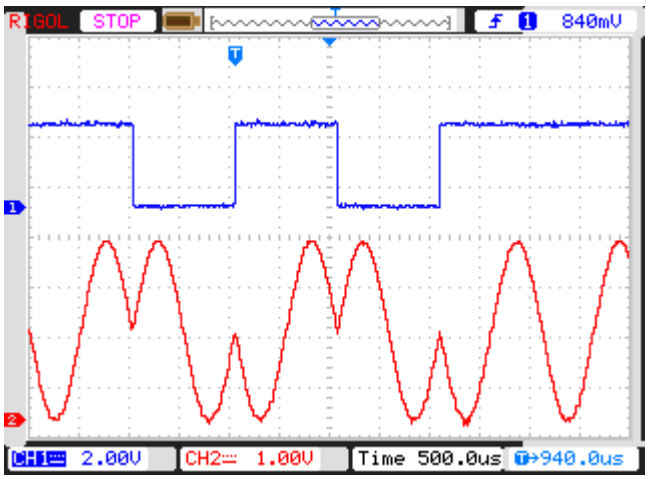

Output at TP3, TP4 & TP9:

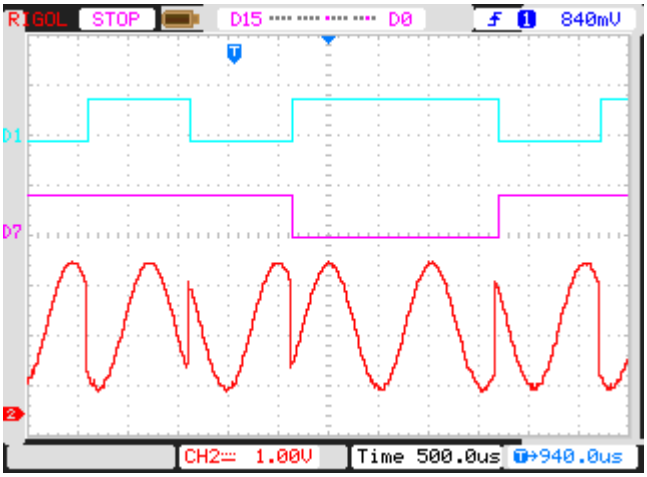

QPSK Demodulator:

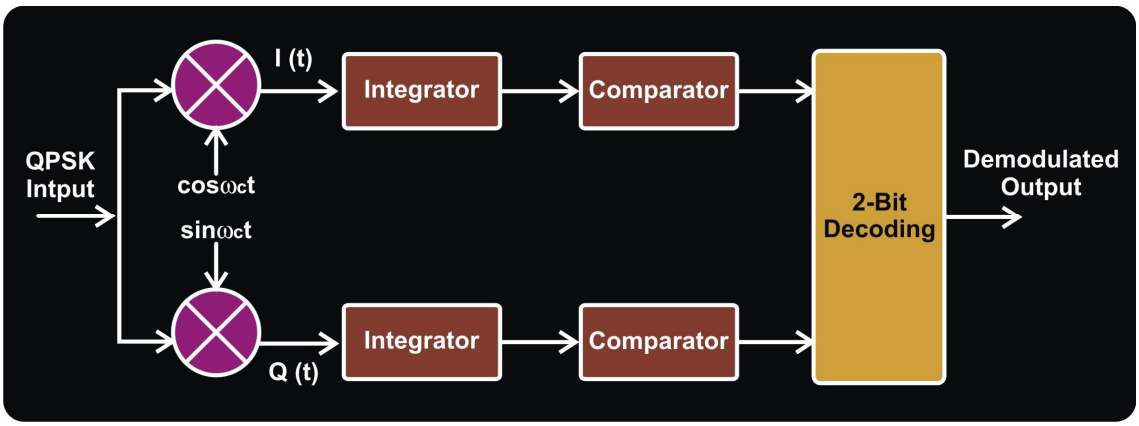

Output at TP10 & TP11:

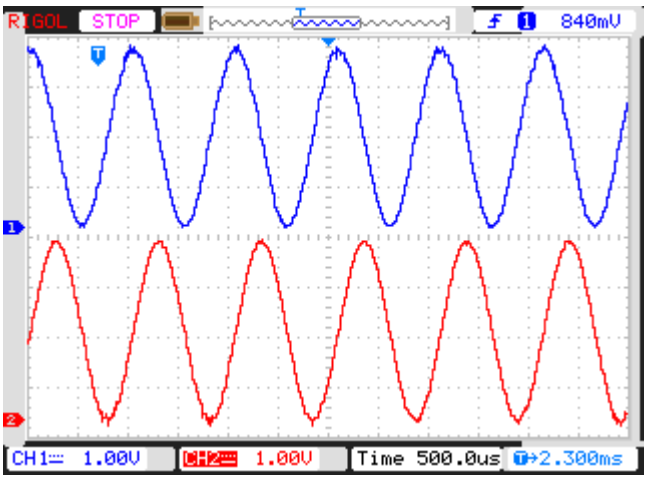

Scientech 2808

Output at TP9 & TP12:

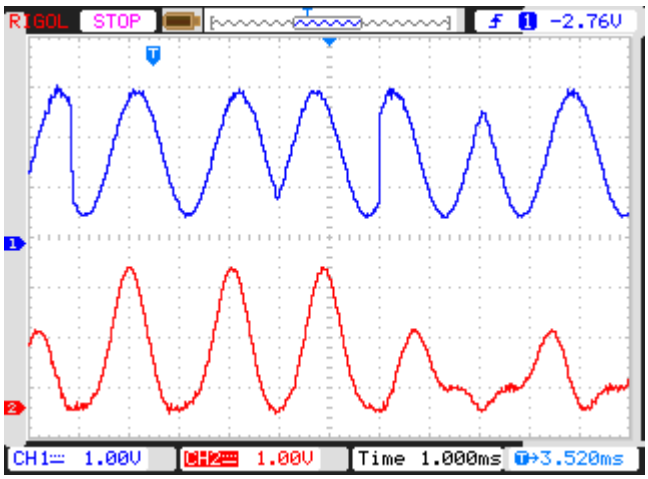

Output at TP9 & TP13:

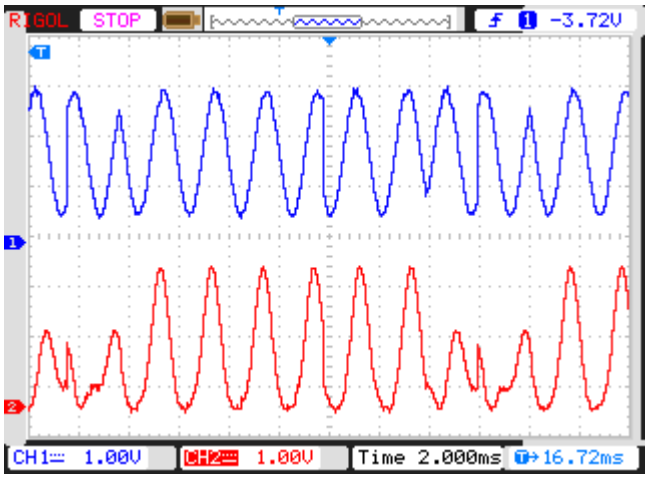

Scientech 2808

Output at TP12 & TP14:

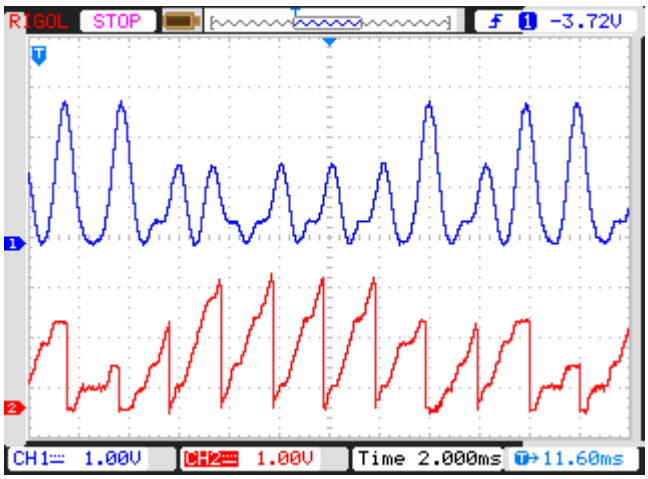

Output at TP13 & TP15:

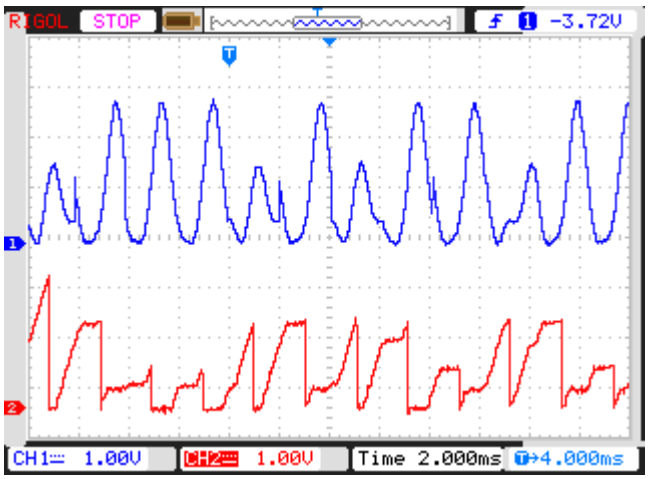

Output at TP14 & TP16:

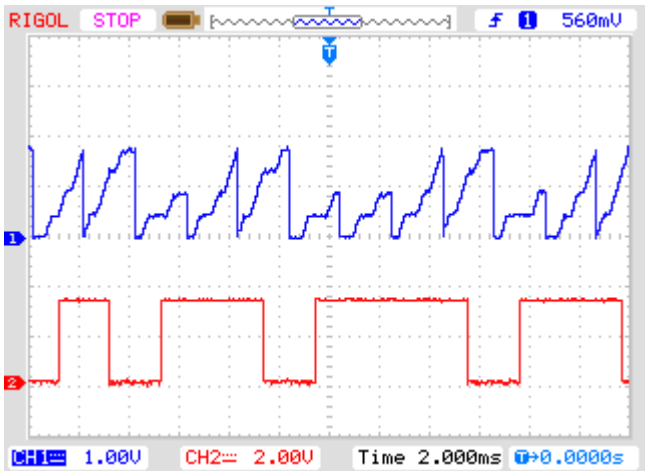

Scientech 2808

Output at TP3 & TP16:

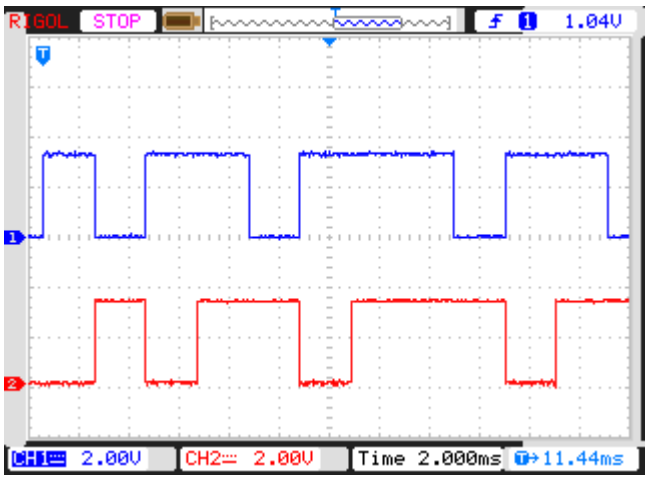

Output at TP15 & TP17:

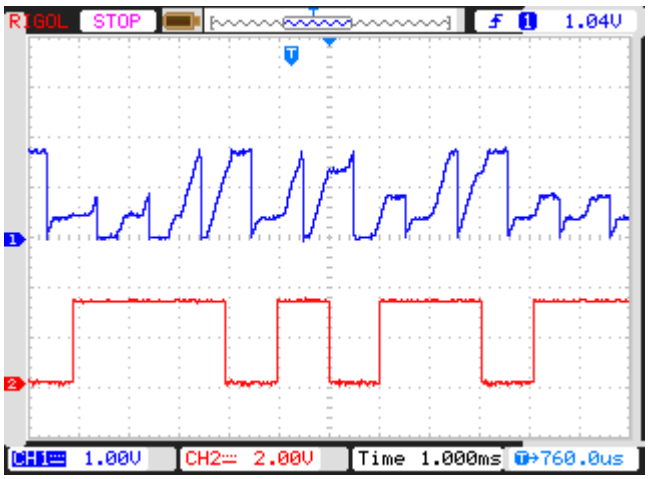

Output at TP4 & TP17:

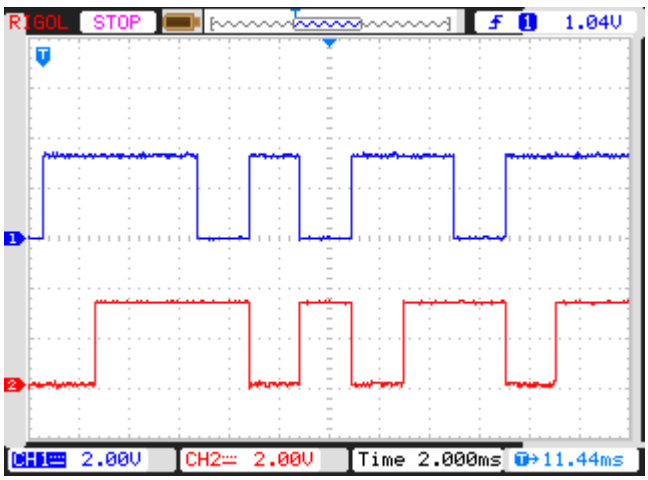

Scientech 2808

Output at TP16, TP17 & TP18:

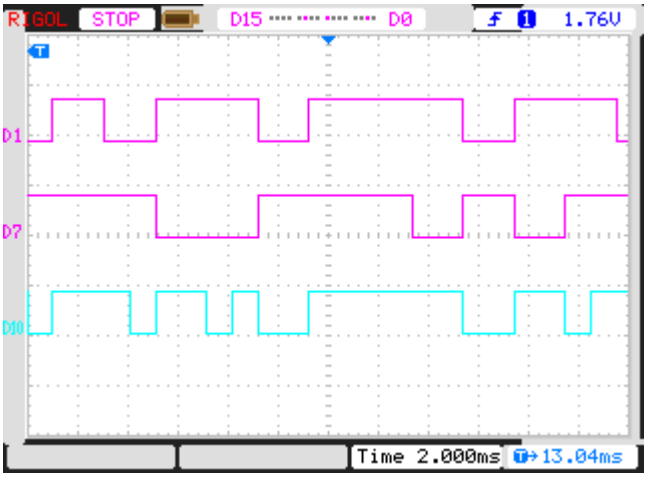

Case Study: 2

DQPSK

Bit Pattern: 64 Bit

Data Rate: 2 kHz

DQPSK Modulator:

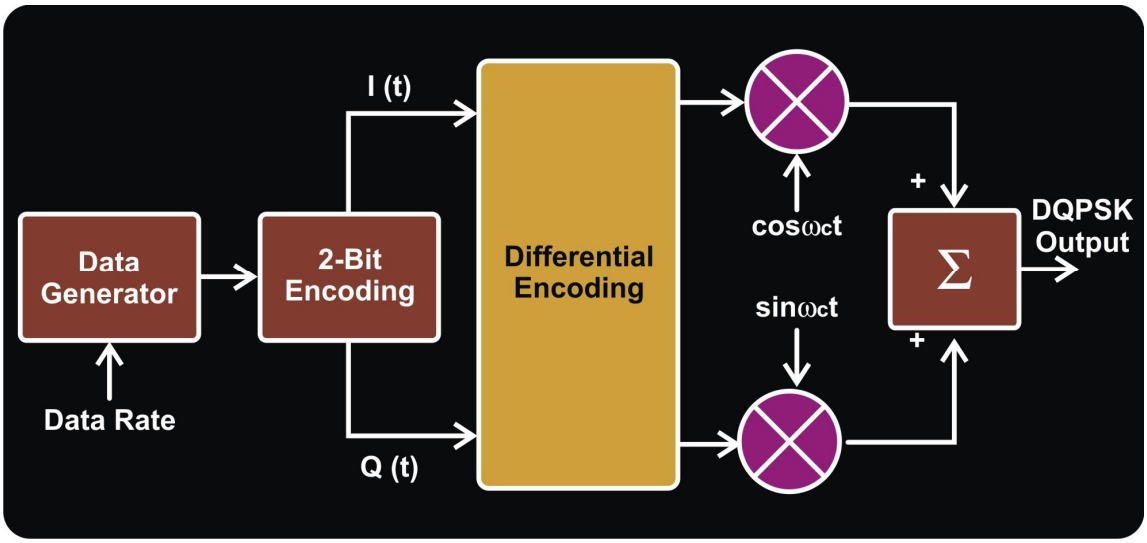

Observations:

Output at TP1 and TP2:

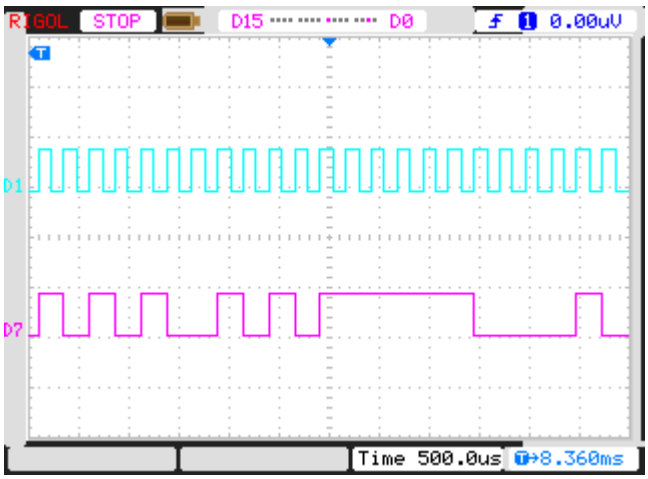

Scientech 2808

Output at TP1, TP2, TP38 & TP39:

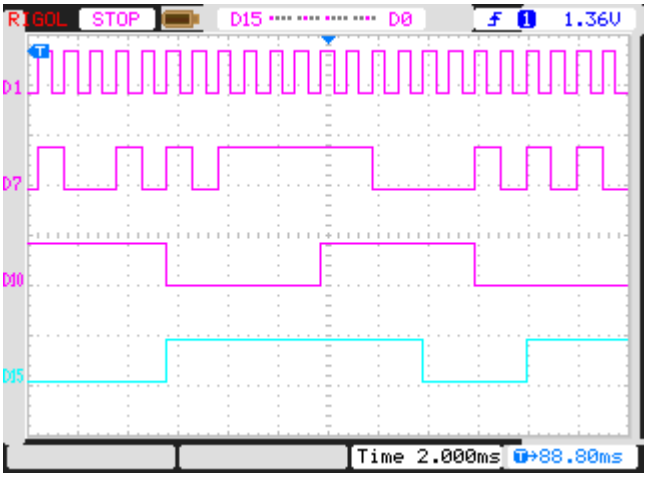

Output at TP38 and TP40:

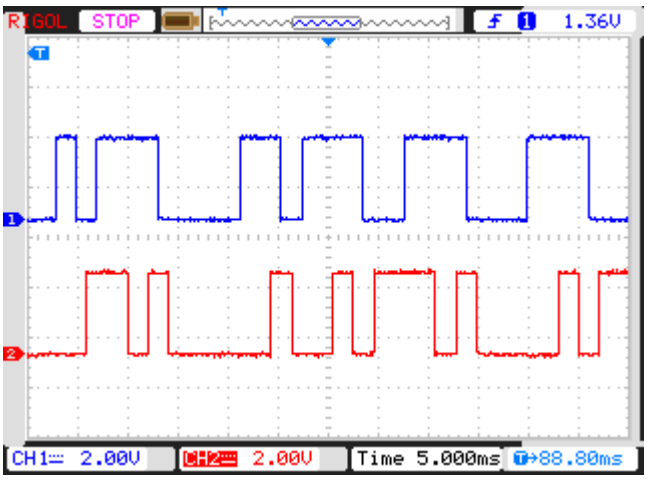

Output at TP39 and TP41:

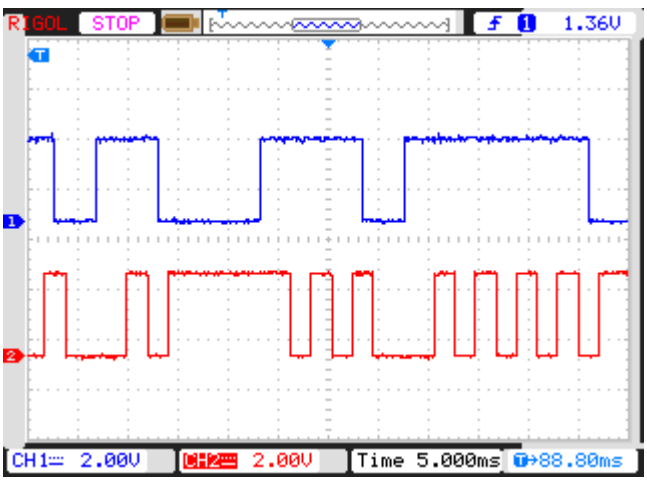

Scientech 2808

Output at TP42 & TP43:

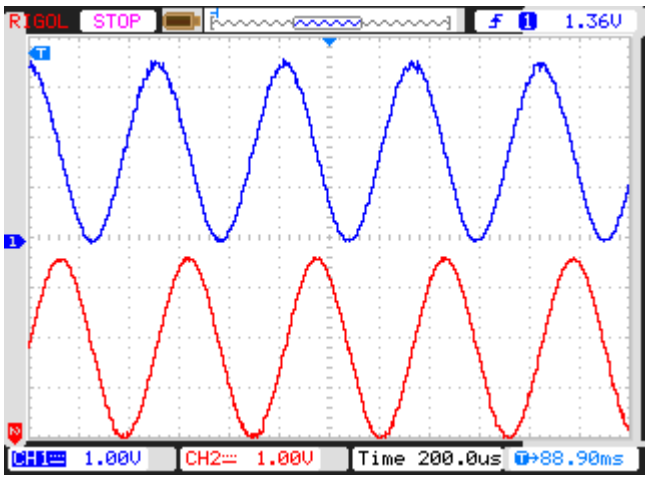

Output at TP40 & TP44:

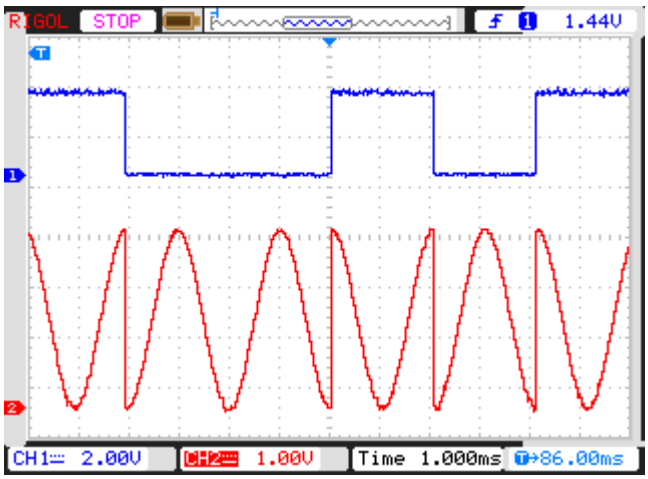

Output at TP41& TP45:

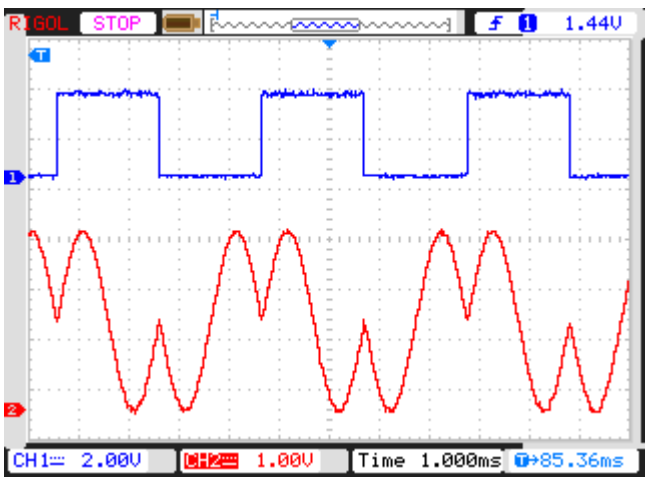

Output at TP40, TP41 & TP46:

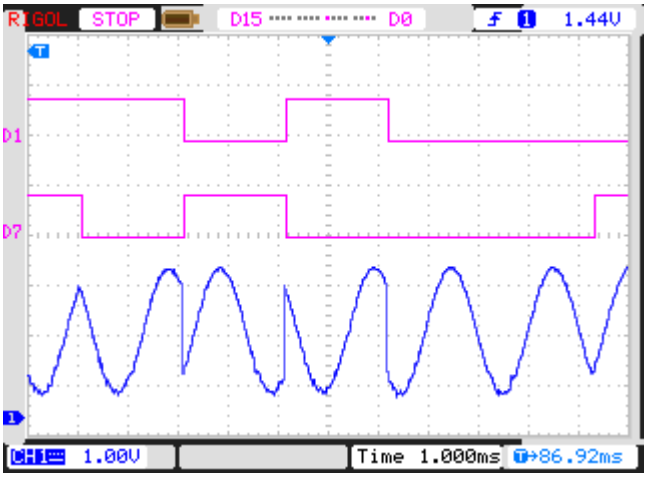

DQPSK Demodulator:

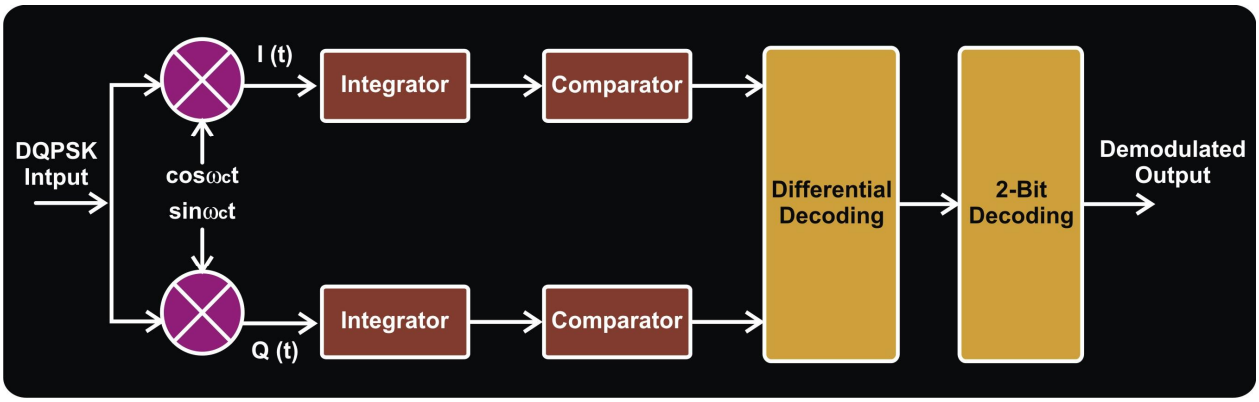

Output at TP47 & TP48:

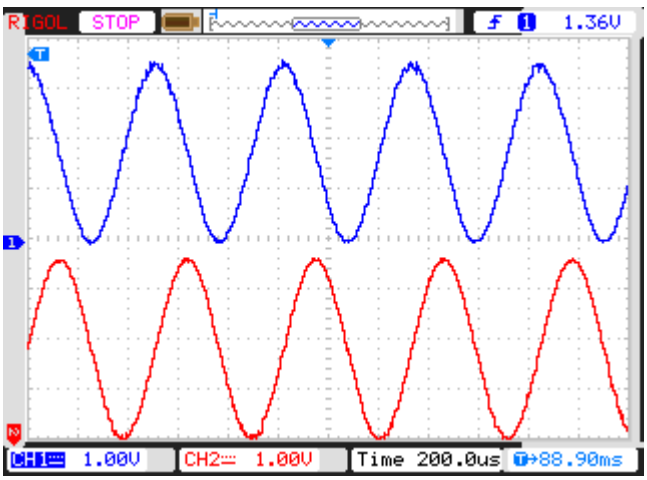

Scientech 2808

Output at TP46 & TP49:

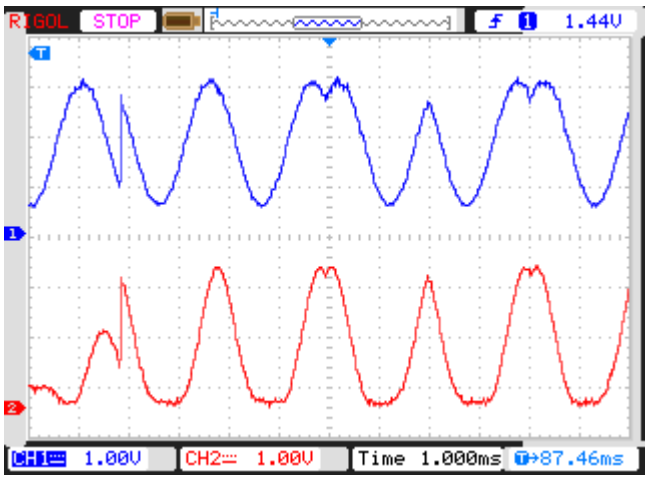

Output at TP46 & TP50:

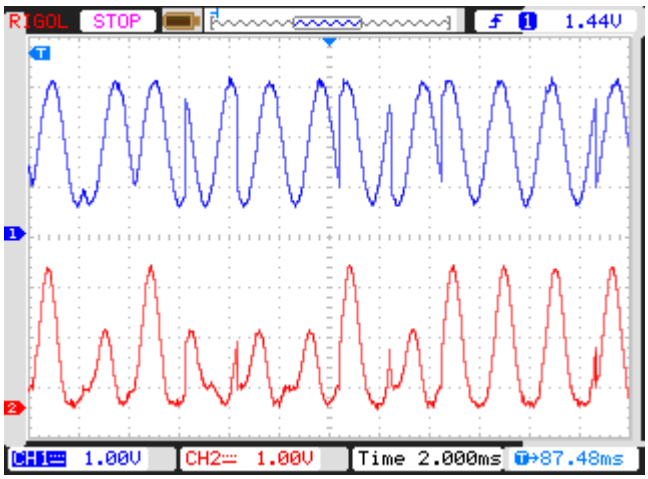

Output at TP49 & TP51:

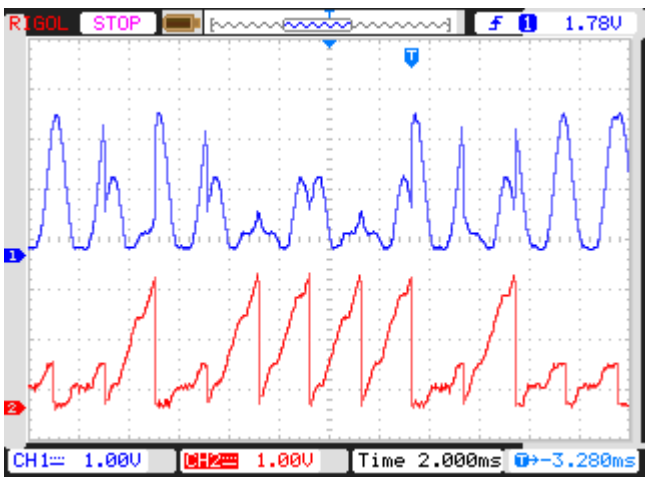

Scientech 2808

Output at TP50 & TP52:

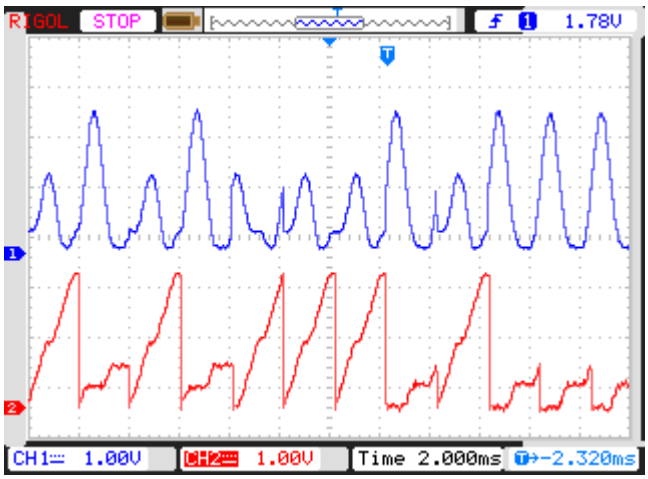

Output at TP51 & TP53:

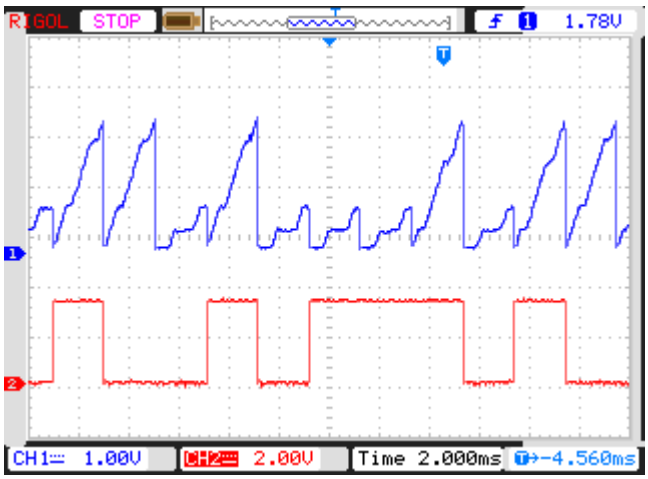

Output at TP40 & TP53:

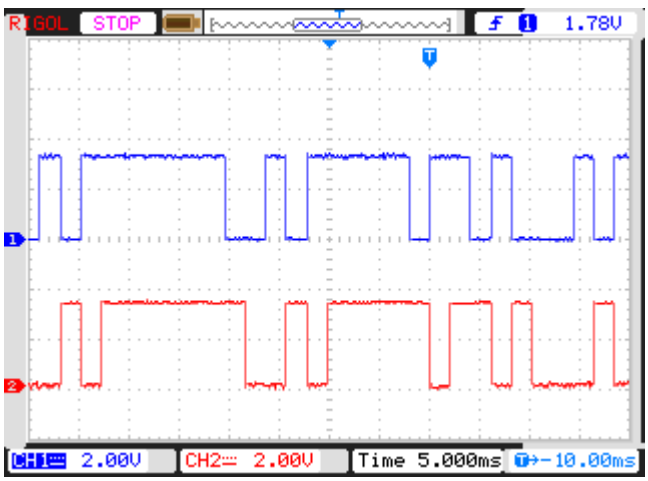

Scientech 2808

Output at TP52 & TP54:

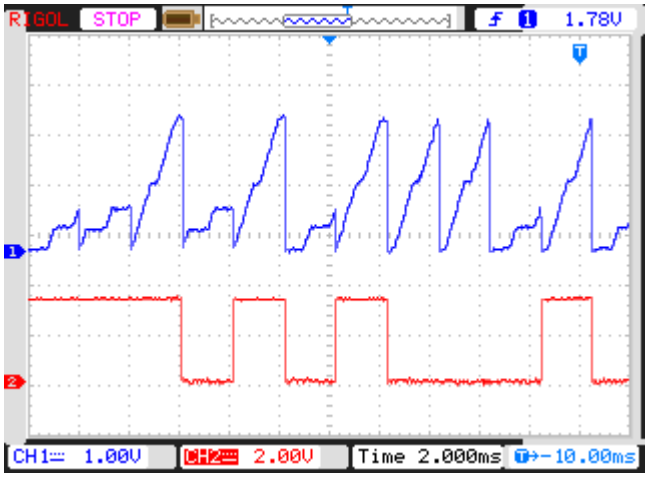

Output at TP41 & TP54:

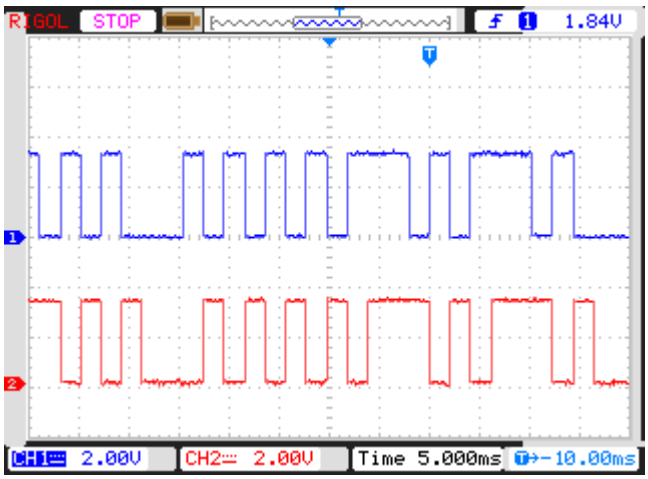

Output at TP53 & TP55:

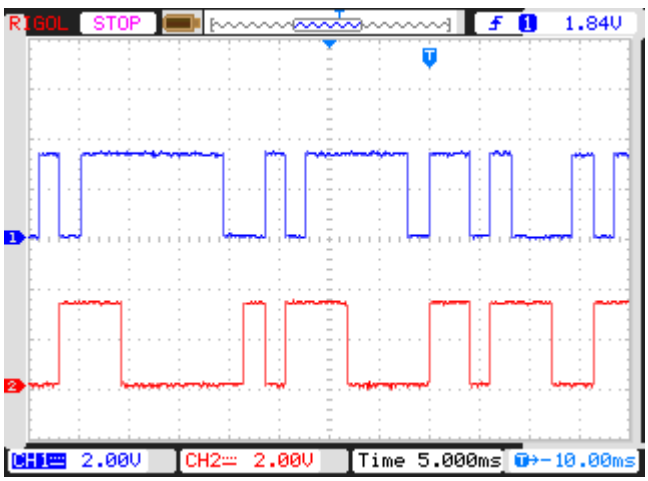

Scientech 2808

Output at TP38 & TP55:

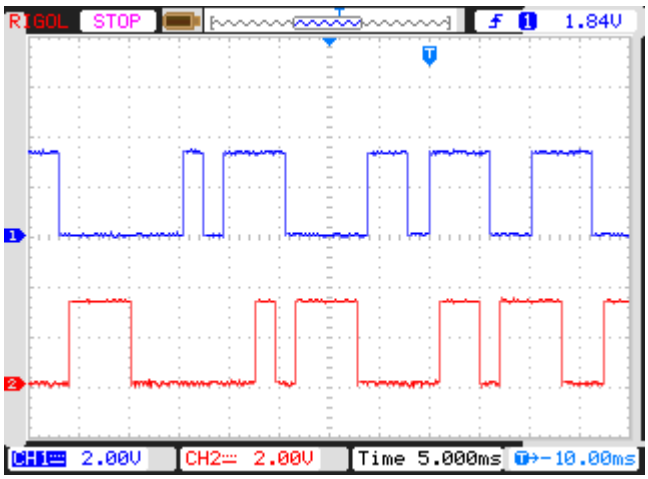

Output at TP54 & TP56:

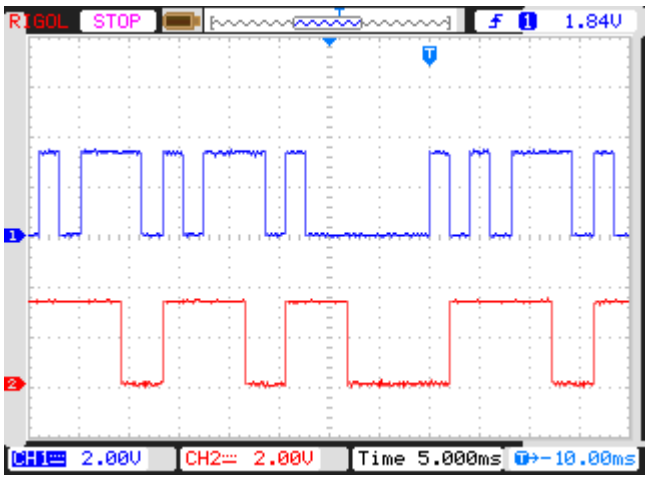

Output at TP39 & TP56:

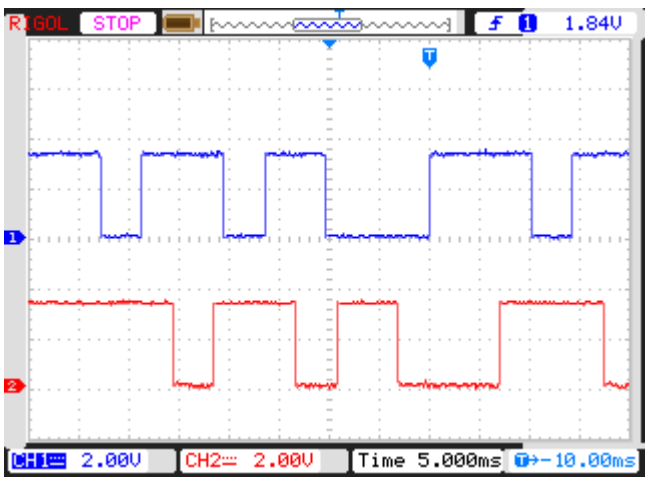

Scientech 2808

Output at TP55, TP56 & TP57:

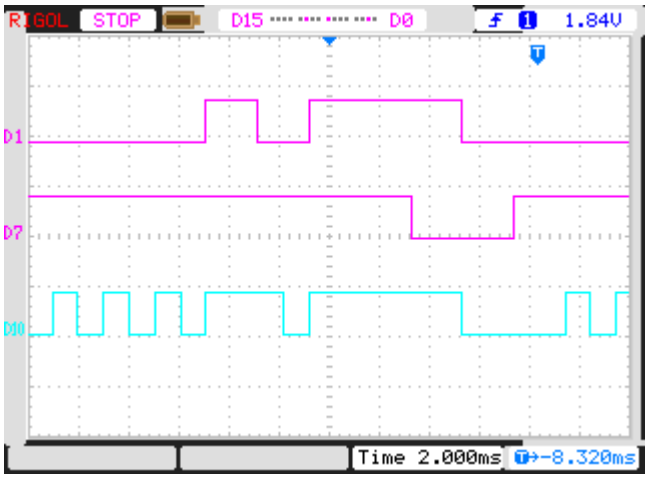

Output at TP2 & TP57:

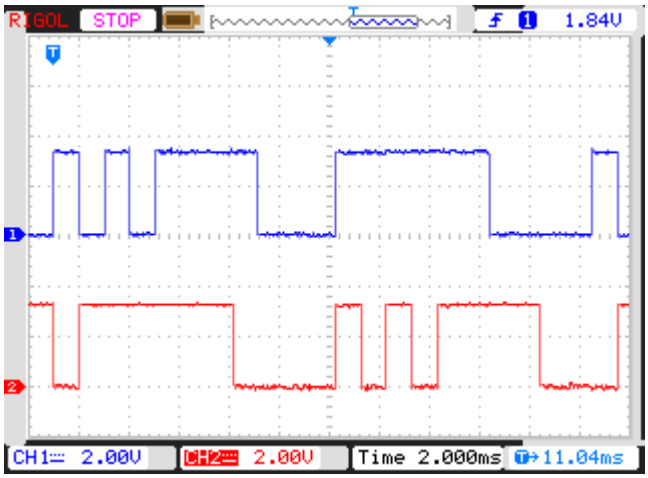

Warranty

1. We guarantee this product against all manufacturing defects for **12 months** from the date of sale by us or through our dealers.
2. The guarantee will become void, if
   a. The product is not operated as per the instruction given in the Learning Material.
   b. The agreed payment terms and other conditions of sale are not followed.
   c. The customer resells the instrument to another party.
   d. Any attempt is made to service and modify the instrument.
3. The non-working of the product is to be communicated to us immediately giving full details of the complaints and defects noticed specifically mentioning the type, serial number of the product and date of purchase etc.
4. The repair work will be carried out, provided the product is dispatched securely packed and insured. The transportation charges shall be borne by the customer.

Hope you enjoyed the Scientech Experience.

List of Accessories

- Mains Cord..... 1 No.