Informatica™

Ultra Messaging (Version 6.16.1)

Operations Guide

Contents

1 Introduction **5**

2 UM Installation **7**

2.1 UM Package Installer . . . 7

2.1.1 Unix Package Installer . . . 8

2.1.2 Windows Package Installer . . . 8

2.1.3 Other Package Installers . . . 8

2.2 Copy UM Runtime Files . . . 9

2.2.1 Copy Unix Runtime Files . . . 9

2.2.2 Copy Windows Runtime Files . . . 10

2.3 Application Installer . . . 10

3 Virtualized Environments **13**

3.1 Physical Network in a Virtualized Environment . . . 13

3.2 Shared Memory Between Containers . . . 13

4 Monitoring **15**

4.1 Monitoring Introduction . . . 15

4.1.1 Network and Host Equipment Monitoring . . . 15

4.1.2 Monitoring UM . . . 16

4.2 Monitoring UM Applications . . . 16

4.2.1 Application Log File . . . 16

4.3 Monitoring UM Daemons . . . 18

4.4 Automatic Monitoring . . . 18

4.4.1 Automatic Monitoring Sample . . . 18

4.5 Centralized Collector . . . 20

4.5.1 Monitoring Collector Service (MCS) . . . 20

4.5.2 User-Developed Collector . . . 22

4.6 Monitoring Formats . . . 22

4.7 Protocol Buffer Format . . . 23

5 Man Pages for MCS **25**

5.1 MCS Man Page . . . 25

5.2 Mcsds Man Page . . . 26

6 MCS Configuration File **29**

6.1 MCS Configuration Elements . . . 29

6.1.1 MCS Element "<um-mcs>" . . . 30

6.1.2 MCS Element "<receiver-transport-opts>" . . . 30

6.1.3 MCS Element "<config-file>" . . . 30

6.1.4 MCS Element "<wildcard-topic>" . . . 31

6.1.5 MCS Element "<topic>" . . . 31

6.1.6 MCS Element "<connector>" . . . 32

6.1.7 MCS Element "<properties-file>" . . . 32

6.1.8 MCS Element "<type>" . . . 32

6.1.9 MCS Element "<daemon>" . . . 33

6.1.10 MCS Element "<pid-file>" . . . 33

6.1.11 MCS Element "<log>" . . . 34

7 Legacy Monitoring **37**

7.1 Self-Monitoring Applications . . . 37

8 Monitoring UM with the lbmmon API **39**

8.1 "lbmmon" API . . . 39

8.1.1 Monitoring Process Flow . . . 40

8.1.2 API Framework Flexibility . . . 41

8.1.3 Creating a Monitoring Source . . . 41

8.1.4 Specifying the Object to Monitor . . . 42

8.1.5 Receiving Monitoring Data . . . 42

8.2 Monitoring Transport Modules . . . 43

8.2.1 The LBM Transport Module . . . 43

8.2.2 The UDP Transport Module . . . 44

8.2.3 The SNMP Transport Module . . . 44

8.3 Monitoring Format Modules . . . 45

8.3.1 The PB Format Module . . . 45

8.3.2 The CSV Format Module . . . 46

9 Startup/Shutdown Procedures **49**

9.1 Topic Resolution . . . 49

9.2 UM Applications . . . 50

9.3 Indications of Possible Application Shutdown . . . 50

9.4 Unicast Topic Resolver (lbmrd) . . . 50

9.5 Running Persistent Stores (umestored) . . . 51

9.5.1 Eliminate Past State . . . 52

9.5.2 Retain Past State . . . 52
9.5.3 Starting a Store . . . 52
9.5.4 Shutting Down a Store . . . 53
9.5.5 Common Startup and Shutdown Issues . . . 53
9.6 DRO (tnwgd) . . . 53
9.6.1 Starting a DRO . . . 54
9.6.2 Restarting a DRO . . . 54
9.7 UM Daemons as Windows Services . . . 54
9.7.1 Install the Windows Service . . . 55
9.7.2 Configure the Daemon . . . 56
9.7.3 Configure the Windows Service . . . 56
9.7.4 Start the Windows Service . . . 58
9.7.5 Remove the Windows Service . . . 58
9.8 UM Analysis Tools . . . 58
9.8.1 Packet Capture Tools . . . 59
9.8.2 Resource Monitors . . . 59
9.8.3 Process Analysis Tools . . . 59
9.8.4 Network Tools . . . 59
9.8.5 UM Tools . . . 60
9.8.6 UM Debug Flags . . . 60

10 Troubleshooting UM Applications 63

10.1 Application Crashes . . . 63
10.1.1 Persistent Store Crashed . . . 63
10.1.2 DRO Crashed . . . 63
10.1.3 Excessive Resource Use . . . 63
10.1.4 Crash on deletion of an object . . . 64
10.1.5 Datagram size mismatches . . . 64
10.2 Assertions . . . 65
10.2.1 Fatal Assertions . . . 65
10.2.2 Non-fatal Assertions . . . 65
10.3 Message Loss . . . 65
10.4 Unrecoverable Loss . . . 67
10.5 High Latency . . . 67
10.6 Deaf Receivers . . . 68
10.7 Persistent Sending Problems . . . 69
10.7.1 Flight Size . . . 69
10.7.2 Persistent Store Connectivity . . . 70

11 Contacting Informatica Support 73

12 UM Log Messages **75**

12.1 UM Core Messages 75

12.2 UM Core API Messages 163

12.3 UM SRS Log Messages 234

12.4 UM Dynamic Routing Log Messages 247

12.5 UM Lbmrd Log Messages 271

12.6 UM Persistent Store Log Messages 272

12.7 UM MCS Log Messages 300

Chapter 1

Introduction

This document gives information and guidance for preparing an application system for deployment, and for operating that system when it is in production.

For policies and procedures related to Ultra Messaging Technical Support, see UM Support.

(C) Copyright 2004,2023 Informatica Inc. All Rights Reserved.

This software and documentation are provided only under a separate license agreement containing restrictions on use and disclosure. No part of this document may be reproduced or transmitted in any form, by any means (electronic, photocopying, recording or otherwise) without prior consent of Informatica LLC.

A current list of Informatica trademarks is available on the web at https://www.informatica.com/trademarks.html.

Portions of this software and/or documentation are subject to copyright held by third parties. Required third party notices are included with the product.

This software is protected by patents as detailed at https://www.informatica.com/legal/patents.html.

The information in this documentation is subject to change without notice. If you find any problems in this documentation, please report them to us in writing at Informatica LLC 2100 Seaport Blvd. Redwood City, CA 94063.

Informatica products are warranted according to the terms and conditions of the agreements under which they are provided.
INFORMATICA LLC PROVIDES THE INFORMATION IN THIS DOCUMENT "AS IS" WITHOUT WARRANTY OF ANY KIND, EXPRESS OR IMPLIED, INCLUDING WITHOUT ANY WARRANTIES OF MERCHANTABILITY, FITNESS FOR A PARTICULAR PURPOSE AND ANY WARRANTY OR CONDITION OF NON-INFRINGEMENT.

This document assumes familiarity with the UM Concepts Guide.

See **UM Glossary** for Ultra Messaging terminology, abbreviations, and acronyms.

Chapter 2

UM Installation

Different versions of UM have some differences in how the files are offered for download. As of 6.11, the following zip files are available for download:

- UMS_*version*.zip - Streaming Edition.
- UMP_*version*.zip - Persistence Edition.
- UMQ_*version*.zip - Queuing Edition.
- UMDRO_*version*.zip - **DRO**.
- UM_*version*_doc.zip - Documentation package.

The first four contain the binary software for that product (all platforms). The last contains HTML and PDF documentation for all UM products and features.

For the binary software, the zip file contains a set of per-platform package installers, and a set of Java jar files. The jar files should be copied to wherever you keep your Java jars. The package installers should be installed as described below.

There are many different ways to install UM on a host, but they can generally be categorized in three groups:

- UM Package Installer from Informatica for the desired products.
- Copy UM Runtime Files to the desired host.
- Application Installer written by the application developer.

2.1 UM Package Installer

Running the UM package installer is typically only done for hosts being prepared for development use. Once an application system is developed, UM is usually installed by the user's own Application Installer.

Note that the **DRO** package installer needs the corresponding version of UM to be already installed and accessible in the current working directory before it can be installed.

2.1.1 Unix Package Installer

A product's Unix Package Installer is an executable file with the file suffix `".sh"`. It is in the form of a `self-extracting archive`, sometimes called a "shell archive".

It is often necessary to set the file permissions to allow execution of the file.

Running the UM Package Installer on a Unix host does nothing more than copy the files under the current working directory. The installer does not perform any other installation actions.

For example, to install the UMQ base product:

```
$ chmod +x UMQ_6.12_Linux-glibc-2.17-x86_64.sh
$ ./UMQ_6.12_Linux-glibc-2.17-x86_64.sh
```

This creates a directory named "UMQ_6.12" which contains all the files and sub-directories needed to develop and test UM-based applications. It does not contain the documentation, which is shipped in its own zip file.

2.1.2 Windows Package Installer

A product's Windows Package Installer is an executable file with the file suffix `".exe"`.

Running the UM Package Installer on a Windows host does the following:

- Copies the files into the proper "Program File" folder, depending on whether the package is 32 or 64 bits.
- Updates the system `"PATH"` environment variable to include UM's `"bin"` folder.
- Optionally installs one or more daemons as Windows Services (see UM Daemons as Windows Services for more information).
- Provides a standard Windows uninstaller which can be run from the normal Windows "Add or Remove Programs" control panel.

To run the installer, simply double-click the package installer icon.

Note that once an application system is developed, UM is usually installed by the user's own Application Installer.

2.1.3 Other Package Installers

Java

The UM Java API is a wrapper around the UM dynamic library (JNI). The jar files are shipped with the package installers, and should be saved wherever you store your jar files.

Note that the Java jar file version must match the underlying UM library version.

Stratus OpenVOS Package

The Stratus OpenVOS package is a self-extracting archive that contains the Ultra Messaging Streaming Edition (UMS) for the Stratus OpenVOS platform.

Ultra Messaging supports Stratus OpenVOS Release 17.0.2aq.

RESTRICTIONS:

The following Ultra Messaging components and features do not run on the Stratus OpenVOS platform:

- Ultra Messaging daemons (tnwgd, ummd, stored, lbmrd, SRS).

- Java API and .NET API.
- UM transports LBT-IPC, LBT-RDMA, or LBT-SMX.
- Accelerated Multicast.
- Persistence.
- Queuing (including ULB).
- Ultra Messaging Desktop Services (UMDS).

HP NonStop Package

The HP NonStop package is a self-extracting archive that contains the Ultra Messaging Persistence Edition (UMP) for the HP NonStop platform.

Ultra Messaging supports HP NonStop Version J06-17.

RESTRICTIONS:

The following components and features do not run on the HP NonStop platform.

- Ultra Messaging daemons (tnwgd, ummd, stored, lbmrd, SRS).
- Java API and .NET API
- UM transports LBT-IPC, LBT-RDMA, or LBT-SMX
- Accelerated Multicast
- Queuing (including ULB).
- Ultra Messaging Desktop Services (UMDS).

2.2 Copy UM Runtime Files

It is generally not necessary to run the UM Package Installer to use UM on a host. For the most part, all you need to do is copy the runtime files to any desired location on your host. In the case of running UM daemons as Windows Services, there are some additional steps necessary; see Copy Windows Runtime Files.

2.2.1 Copy Unix Runtime Files

Informatica generally recommends that UM runtime files be stored in the `"lib"` and `"bin"` sub-directories in the structure that the installer creates. If the brokered queuing feature is used, then the `"broker"` sub-directory should also be included. For example:

```
$ ls ~/UMQ_6.12/Linux-glibc-2.12-x86_64/
bin/  broker/  lib/
```

Notice that the `"include"` sub-directory is missing. Those files are only needed for development, not for production runtime.

For ease of use, users typically include `"lib"` in their library search path (e.g. `"LD_LIBRARY_PATH"` environment variable), and include `"bin"` in their `"PATH"`.

No other specialized installation steps are needed for UM.

Alternatively, the contents of "bin" can be copied to wherever you already store your application executables, and the contents of "lib" can be copied to wherever you store your application dynamic libraries.

2.2.2 Copy Windows Runtime Files

Informatica generally recommends that UM runtime files be stored in the "bin" sub-folder in the structure that the installer creates. If the brokered queuing feature is used, then the "broker" sub-directory should also be included. For example:

```
> dir "c:\Program Files\Informatica\UMQ_6.12\Win2k-x86_64"
... <DIR>   bin
... <DIR>   broker
```

Notice that the "include" and "lib" sub-folders are missing. Those files are only needed for development, not for production runtime.

For ease of use, users typically include "bin" in their "PATH" environment variable.

No other specialized installation steps are needed for UM applications. However, if you want to run one or more UM daemons as Windows Services, then there are some additional steps necessary, described in UM Daemons as Windows Services.

Alternatively, the contents of "bin" can be copied to wherever you already store your application executables.

Note

> If it is desired to uninstall UM that was installed by copying files, UM will not show up in the normal Windows "Add or Remove Programs" control panel. If you have installed UM daemons as Windows Services, then you must manually remove them as Services before deleting the UM runtime files. See Remove the Windows Service.

2.3 Application Installer

UM is intended to be integrated into a user's own application system. Each user decides how his application system is packaged and installed.

UM users typically do not run the UM package installer as part of their application installation procedure. Rather, the UM runtime files are typically packaged with the user's application files.

The requirements for the user's application installation procedure are the same as outlined in Copy UM Runtime Files, and for the most part, consist simply of copying the UM files to the host.

In the case of running UM daemons as Windows Services, there are some additional steps necessary; see Copy Windows Runtime Files.

Chapter 3

Virtualized Environments

UM can be used in virtualized environments. It can be heavy-weight virtualization, as with virtual machines using VMWare or Virtual Box, or it can be lighter-weight containers, as with Docker. Containers can be further enhanced via an orchestration layer, such as Kubernetes or OpenShift.

For the most part, UM does not notice the virtualization. In particular, UM does not currently explicitly integrate with virtualization features. However, we have found that UM performance can be affected by choices made when setting up the virtualization.

3.1 Physical Network in a Virtualized Environment

By default, a virtualized environment typically provides a virtual network interface with an IP address that is different than the physical interface provided by the host. The virtualization software then provides a virtual network to interconnect the virtual interfaces and the physical interface.

However, this virtual network adds overhead to the exchange of message, adding latency and reducing throughput.

Most UM users choose to provide the virtualized environments access to the physical interface(s). For example, with virtual machines, the physical server is typically installed with more than one network interface. Then each VM is given exclusive access to one interface. With Docker, it is more common to simply have each container use the `host` network.

3.2 Shared Memory Between Containers

It is possible to use IPC or SMX transports across containers by using the `-ipc` option.

We do not know of any way to use IPC or SMX across virtual machines on the same physical server.

Chapter 4

Monitoring

For an Ultra Messaging deployment, "monitoring" is the process of overseeing the operation of UM and the resources it uses to determine its health and performance.

Informatica strongly recommends that users of Ultra Messaging actively monitor its operation.

4.1 Monitoring Introduction

Many Ultra Messaging deployments operate without any problem. Why monitor a system that is working fine? Monitoring lets you:

- Evaluate the health of the messaging system.
- Identify inefficiencies that can cause latency and limit capacity.
- Track utilization trends and prevent future overload.
- Provide forensic data to help diagnose system trouble. (If you wait to turn on monitoring until after you have a problem, it's too late.)

UM deployments are often large-scale, loosely-coupled systems, used by many diverse end-user groups who may have little knowledge of each others usage patterns or future plans. Especially when there are resources shared by these groups, it is important to monitor UM's operation and performance characteristics. This can help you avoid problems, and when problems do arise, having monitoring data can be critical to diagnosing the root causes.

At a high level, Informatica strongly recommends:

- Network and Host Equipment Monitoring.
- UM Monitoring.

4.1.1 Network and Host Equipment Monitoring

An effective monitoring strategy should include monitoring of the host and network resources that UM depends on. Informatica requests that you monitor and record data from the following sources:

- Network equipment (switches, routers, firewalls). Includes packet drops at ports and trunks. Often also includes always-running packet capture (for example, `Corvil`).

- Hosts. Includes CPU load, memory usage, hardware errors, and packet drops (kernel and user sockets). Where possible, monitor resource usage per-process.

There are many vendors of monitoring technology that do a good job of recording and visualizing network and host statistics and logged events. Your operations staff should have fast and easy access to this monitoring data. Ideally, your monitoring tools will raise alerts when problems are detected.

Detailed discussion of host and network monitoring is beyond the scope of the Ultra Messaging documentation.

4.1.2 Monitoring UM

Broadly speaking, there are three kinds of UM operational data that should be monitored and recorded:

- UM events. This can be from either user applications or UM daemons (Store, DRO, etc). Events are typically logged and saved to local log files.
- UM library statistical data. This can be from user applications or from UM daemons, and mostly contains information about UM contexts and transports.
- UM Daemon Statistical data. This is daemon-specific operational data (Store, DRO, etc).

4.2 Monitoring UM Applications

These are application programs that you, the UM user, have developed. As you write your code, Informatica requests that all applications do the following:

1. Record all failed API calls with informational string, typically to a log file.
2. Record all non-message events delivered to the application, typically to a log file,
3. Record all asynchronous UM log messages (strings), typically to a log file.
4. Record UM library statistics, typically using UM automatic monitoring.

Items 1-3 typically involve writing to log file on the local host. See Application Log File.

Item 4 typically involves configuring the UM library to publish its statistics to a Centralized Collector. The statistics are sampled and published using UM's Automatic Monitoring feature. (There are alternatives; see Legacy Monitoring.)

Note that Informatica recommends the use of the Monitoring Collector Service (MCS), which is a relatively recent addition to UM. Be aware that the MCS is able to collect stats from all UM versions 5.x and 6.x. It is not necessary to upgrade applications to take advantage of the latest UM monitoring capabilities.

4.2.1 Application Log File

During the design and development of user applications, Informatica requests that users implement the following logging items:

1. The UM library delivers events to the application. Informatica requests that applications log all informational and exceptional events. Logs are classified as to their severity, which is useful for automatic log file scanners to detect potential problems and raise alerts.

- **Informatica requests that logs be written with a time stamp with at least second resolution (preferably millisecond), the log severity level, and the descriptive text of the event being logged.**

Be aware that different threads might need to write logs asynchronously to each other. Your logger code must be thread-safe.

2. Some of UM events represent the delivery of user data messages. These events do not need to be logged. Other events are informational and are delivered during normal operation, like Beginning of Session (BOS). These should be logged because they can be essential to diagnose problems.

   - **Informatica requests that all informational (non-message) events be logged.**

3. Many UM event callbacks can deliver a variety of different event types. For example, a receiver callback can be delivered user data messages, Beginning of Session (BOS) events, etc. The application code typically recognizes those events that it is written to recognize, and ignores the others.

   - **Informatica requests that unrecognized events be logged with their event types.**

4. The UM library can sometimes detect internal conditions that are not associated with deliverable events or API calls. These are delivered to the application with the "logger callback" (**lbm_log()** for C, **LBM.setLogger()** for Java and .NET).

   - **Informatica requests that all logger callbacks be logged.**

5. The application calls UM API functions. Each function can return a failed status. In C, the failure is almost always indicated by a return value of -1. In Java and .NET, the failure is almost always indicated by throwing an exception. In either case, UM provides a text string that describes the failure. See **lbm_errmsg()** for C, the exception's `toString()` method for Java, or the exception's `Message property` for .NET).

   - **Informatica requests that all failed API calls be logged with their descriptive text.**

6. Log files are typically "rolled" (saved off and re-created) on a periodic basis (usually daily), and are kept for some period of time before being purged.

   - **Informatica requests that full logs be retained for at least 1 week.**

7. Recording and saving all this information is necessary to diagnose many user-visible problems. However, errors can be written to the log which are not associated with a user-visible problem. Users should have tools and procedures that alert operators of abnormal logs. This can prevent small problems from becoming big problems.

   - **Informatica requests the use of a log file analysis tool that scans the live log files and reports unusual or exceptional logs and raises alerts that will be noticed by the operations staff.**

   Ideally, log file monitoring would support the following:

   - Archive all log messages for all applications for at least a week, preferably a month.
   - Provide rapid access to operations staff to view the latest log messages from an application.
   - Periodic scans of the log file to detect errors and raise alerts to operations staff.

   There are many third party real-time log file analysis tools available. A discussion of possible tools is beyond the scope of UM documentation.

4.3 Monitoring UM Daemons

Monitoring the UM daemons (Stores, DROs, etc) is similar to monitoring user applications.

For an overview of Informatica monitoring recommendations, see Monitoring.

For most UM daemons, there are three types of monitoring data that should be collected and monitored:

- Log files.
- UM Library Statistics. These are stats for contexts, transports, etc.
- Daemon Statistics. These are stats specific to each daemon (Store, DRO, etc).

Informatica requests that all UM daemons being used in a deployment be monitored for all three types of data.

The different UM daemons have different methods of enabling monitoring. See:

- **Store Monitoring**.
- **DRO Monitoring**.
- **SRS Monitoring**.

4.4 Automatic Monitoring

UM applications and some UM daemons (Store, DRO) make use of the UM library, which maintains a rich set of statistics. The library statistics consists of data about the health and operation of UM contexts, transport sessions, and event queues.

The recommended method for monitoring UM library statistics is the automatic monitoring feature. This should be enabled via configuration options on user applications and also Store daemons. See **Automatic Monitoring Options**. When enabled, a background context will sample and send the monitoring data. Note that a single monitoring context will be created and configured with the monitoring options. For example, if your application has multiple contexts, it is not possible to have different automatic monitoring settings for each context. For more information on monitoring applications with multiple contexts, see `https://knowledge.informatica.com/s/article/151305`.

Enabling the automatic monitoring feature will create a monitoring context that is configured for reduced system resource usage (sockets and memory). This monitoring context periodically wakes up and samples the library statistics in the current process and publishes them. The context is created with the name `"29west_statistics_context"` to simplify configuring the context with an **XML configuration file**.

Informatica recommends setting up a separate **Topic Resolution Domain** for monitoring data. If possible, that TRD should be hosted on a separate network from the main production network (perhaps an administrative "command and control" network). This minimizes the impact of monitoring on application throughput and latency.

To ease the deployment of monitoring data on an alternate network, Informatica recommends not using multicast. Topic resolution should use **Unicast UDP TR** or **TCP TR** (or both), and the monitoring data should be sent via the **tcp transport**.

4.4.1 Automatic Monitoring Sample

Here is an excerpt from a sample application configuration file that shows how the above recommendations implemented:

```
<?xml version="1.0" encoding="UTF-8" ?>
<um-configuration version="1.0">
  <templates>
    ...
    <template name="automonitor">
      <options type="context">
        <option name="monitor_format" default-value="pb"/>
        <option name="monitor_interval" default-value="600"/>
        <option name="monitor_transport" default-value="lbm"/>
      </options>
    </template>
    ...
    <template name="mon_ctx">
      <options type="context">
        <option name="resolver_unicast_daemon" default-value="10.29.3.101:12801"/>
        <option name="default_interface" default-value="10.29.3.0/24"/>
        <option name="mim_incoming_address" default-value="0.0.0.0"/>
        ...
      </options>
      <options type="source">
        <option name="transport" default-value="tcp"/>
      </options>
      ...
    </template>
    ...
  </templates>

  <applications>
    ...
    <application name="myapplication">
      <contexts>
        <context name="mycontext" template="mytemplate,automonitor">
          <sources/>
        </context>
        <context name="29west_statistics_context" template="mon_ctx">
          <sources/>
        </context>
      </contexts>
    </application>
    ...
```

Here is a pair of "flat" configuration files to do the same thing:

myapplication.cfg:

```
context monitor_format pb
context monitor_interval 600
context monitor_transport lbm
context monitor_transport_opts config=mon.cfg
...
```

mon.cfg:

```
context resolver_unicast_daemon 10.29.3.101:12801
context default_interface 10.29.3.0/24
context mim_incoming_address 0.0.0.0
source transport tcp
```

Notes:

1. The **monitor_format (context)** value "pb" selects the protobuf format and is available for the Store in UM version 6.14 and beyond. For applications running on earlier versions, omit **monitor_format (context)** (the format will be "csv"). UM supports a mixture of different versions, with the centralized collector accepting both "csv" and "pb".

2. For applications that use event queues, the corresponding `"event_queue monitor_..."` options should be added.

3. For a list of possible protobuf messages for UM library monitoring, see the "ums_mon.proto" file at **Example ums_mon.proto**.

4. The application context named `"mycontext"` is configured with the `"automonitor"` template, which sets the automatic monitoring options. The **monitor_interval (context)** option enables automatic monitoring and defines the statistics sampling period. In the above example, 600 seconds (10 minutes) is chosen somewhat arbitrarily. Shorter times produce more data, but not much additional benefit. However, UM networks

with many thousands of applications may need a longer interval (perhaps 30 or 60 minutes) to maintain a reasonable load on the network and monitoring data storage.

5. When automatic monitoring is enabled, it creates a context named "29west_statistics_context". It is configured with the "mon_ctx" template, which sets options for the monitoring data TRD. (Alternatively, you can configure the monitoring context using **monitor_transport_opts (context)**.) When possible, Informatica recommends directing monitoring data to an administrative network, separate from the application data network. This prevents monitoring data from interfering with application data latency or throughput. In this example, the monitoring context is configured to use an interface matching `10.29.3.0/24`.

6. The monitoring data is sent out via UM using the TCP transport.

7. These settings were chosen to conform to the recommendations above.

For a full demonstration of monitoring, see: `https://github.com/UltraMessaging/mcs_demo`

4.5 Centralized Collector

Once you have applications and daemons publishing statistics, you need an independent program (the monitoring collector) that subscribes to the statistics and records them for subsequent analysis and display.

UM supports two approaches to centralized monitoring:

- Monitoring Collector Service (MCS). Informatica's monitoring program that collects library and daemon statistics for storage in a database of your choosing.

- User-Developed Collector. Your own centralized monitoring program that collects library and daemon statistics for storage and analysis.

4.5.1 Monitoring Collector Service (MCS)

The MCS is an independent monitoring data collector program. It subscribes to UM library and daemon statistics and writes the data to a database.

MCS requires Java 9 or greater.

The MCS needs to be configured. It has an XML configuration file; see MCS Configuration File. In this configuration file, the MCS Element "<config-file>" references an LBM configuration file. This is used to configure the UM library so that it can subscribe to published monitoring data.

The MCS also needs its database to be created prior to starting it.

See Man Pages for MCS for information on running the MCS.

As of UM 6.14, the MCS supports writing to `SQLite` (the default) or `HDFS (Apache Hadoop)`, selectable by configuration. Note that UM does not ship with a copy of either database software package. The user must install a copy of the desired database on the host where MCS will run.

SQLite

To use SQLite, you must install it yourself on the host where MCS is intended to run. You should have some familiarity with administering the system. SQLite training is beyond the scope of UM documentation.

MCS is written to convert incoming proto buff messages into JSON, and write the JSON to SQLite using SQLite's jdbc driver. This allows flexible querying of the data.

You will find the MCS executable the UM package's "MCS/bin" directory. Also in that directory, you will find the file "ummon_db.sql" which can be used to create the database. For example, enter the following command from the Linux shell:

```
sqlite3 /mcs/mcs.db <$HOME/UMP_6.15/MCS/bin/ummon_db.sql
```

Here is the contents of "ummon_db.sql":

```
PRAGMA foreign_keys=OFF;
BEGIN TRANSACTION;
CREATE TABLE umsmonmsg(message json);
CREATE TABLE umpmonmsg(message json);
CREATE TABLE dromonmsg(message json);
CREATE TABLE srsmonmsg(message json);
COMMIT;
```

To use SQLite, set MCS's XML configuration file's element <connector> to "sqlite". Also set MCS Element "<properties-file>" to a file which contains properties that the MCS's "sqlite" connector expects:

- sqlite_database_path - file path to the SQLite database file. If on Windows, you may use forward slashes or escaped (double) back slashes to separate directories.

Example sqlite properties file:

```
sqlite_database_path=/mcs/ummon.db
```

For a full demonstration of monitoring with the MCS and sqlite, see: https://github.com/UltraMessaging/mcs_demo

Listing best practices for SQLite deployments is beyond the scope of UM documentation. However, this paragraph from https://www.sqlite.org/lockingv3.html did catch our eye:

> SQLite uses POSIX advisory locks to implement locking on Unix. On Windows it uses the LockFile(), LockFileEx(), and UnlockFile() system calls. SQLite assumes that these system calls all work as advertised. If that is not the case, then database corruption can result. One should note that POSIX advisory locking is known to be buggy or even unimplemented on many NFS implementations (including recent versions of Mac OS X) and that there are reports of locking problems for network filesystems under Windows. **Your best defense is to not use SQLite for files on a network filesystem.**

(emphasis ours)

See https://www.sqlite.org/ for full information on SQLite.

HDFS

To use HDFS, you must install it yourself on the host where MCS is intended to run. You should have some familiarity with administering the system. Training you on HDFS's use is beyond the scope of UM documentation.

MCS is written to write the protocol buffers directly to HDFS. This allows flexible querying of the data.

You will find the MCS executable the UM package's "bin" directory, along with the other daemon binaries.

To use HDFS, set MCS Element "<connector>" to "hdfs". Also set MCS Element "<properties-file>" to a file which contains properties that the MCS's "hdfs" connector expects:

- hdfs_core_site_file_path - path name of XML resource file containing read-only configuration defaults for hadoop.
- hdfs_hdfs_site_file_path - path name of XML resource file containing site-specific configuration for a given hadoop installation.

See hadoop documentation for details on the resource files.

Example hdfs properties file:

```
hdfs_core_site_file_path=/mcs/hdfs_core.xml
hdfs_hdfs_site_file_path=/mcs/hdfs_site.xml
```

4.5.2 User-Developed Collector

For UM users have taken either the **Example lbmmon.c** or the **Example lbmmon.java** source file and modified it to create a monitoring application, you may want to enhance your program to take advantage of new capabilities introduced in 6.14. Note that there is also a .NET example: **Example lbmmon.cs**, which is still functional but is no longer being enhanced. Users are requested to write their collector using C/C++ or Java.

Prior to UM version 6.14, different types of published data required different methods for receiving and accessing them. UM library statistics were received using the "lbmmon" library, Store and DRO daemon stats were received as C-style binary data structures, and SRS stats were received as JSON.

Starting with 6.14, library, Store, and DRO stats have been unified with `Google Protocol Buffers`. Starting with 6.15, the SRS joined them in supporting protocol buffers. See Monitoring UM Daemons.

Also, the lbmmon library is enhanced with a "passthrough" mode that gives the monitoring application direct access to the protocol buffer messages. (The SRS daemon statistics are not yet available as protocol buffers.)

The older methods are still functional, but they may not be further enhanced in the future. Informatica recommends migrating to the passthrough mode and the google protocol buffers. To take full advantage of its new capabilities, lbmmon should be run with command-line options:

```
--format=pb --format-opts="passthrough=convert"
```

This allows lbmmon to receive both proto buff formatted data as well as CSV formatted data. CSV data is converted to proto buff before delivery to the monitoring application.

See **Example lbmmon.c** and/or **Example lbmmon.java** for details on using both the new and older lbmmon APIs.

You may notice that **Example lbmmon.java** no longer contains print lines of the individual fields of the monitoring data objects. These accesses were moved into the lbmmon Jar file as displayString() methods for each statistics data object to simplify the example source code. For convenience, those methods' source code has been collected into an example file, **Example displayString.java**.

4.6 Monitoring Formats

The UM library and UM daemons publish their statistics using several different message formats, depending on the type of data being sent. Starting with UM version 6.14, most of those formats are deprecated in favor of a unified message format based on `Google Protocol Buffers`.

The data formats are:

- Protocol Buffers. Option for UM library statistics, and Store, DRO, and SRS daemon statistics. Recommended.
- CSV - comma-separated values. Option for UM library statistics. Deprecated, but retained for backward compatibility.
- Binary C-style data structures. Option for UM daemons Store and DRO daemon statistics. Deprecated, but retained for backward compatibility.
- JSON. Option for SRS daemon statistics. Deprecated, but retained for backward compatibility.

For applications and UM daemons, Informatica recommends protocol buffers. Users of binary or JSON formats are recommended to migrate to protocol buffers.

4.7 Protocol Buffer Format

You can view and use the proto buff definition files at **Example Protocol Files**. Note that most integer fields are defined as "uint64", a 64-bit unsigned value. However, within the UM library, almost all of the integer statistics are maintained as C "unsigned long int" values. Note that different compilers interpret "unsigned long int" in different ways.

Platform	Unsigned Long Size
Linux 64-bit	64 bits
Linux 32-bit	32 bits
Windows 64-bit	32 bits
Windows 32-bit	32 bits

This can make a difference for statistics that increase in value quickly, like **lbm_src_transport_stats_lbtrm_t_stct::bytes_sent**. On platforms where a "long int" is 32 bits, a high-rate transport session running for a few hours can reach that field's maximum value (4,294,967,295) and then "wrap" back to zero.

Also note that a few statistics represent the "minimum value seen", and are initialized to the maximum possible value. For example, **lbm_rcv_transport_stats_lbtrm_t_stct::nak_tx_min** is initialized to the maximum value for "unsigned long int". Thus, GCC on a 32-bit build or the Microsoft compiler will initialize it to 4,294,967,295 (2∗∗32 - 1). GCC on a 64-bit build will initialize it to 18,446,744,073,709,551,615 (2∗∗64 - 1).

To see the underlying data types and descriptions for UM library statistics, look at the C language definitions of the statistics structures. See:

- **lbm_rcv_transport_stats_t_stct**
- **lbm_src_transport_stats_t_stct**
- **lbm_context_stats_t_stct**
- **lbm_event_queue_stats_t_stct**
- **lbm_rcv_topic_stats_t_stct**
- **lbm_wildcard_rcv_stats_t_stct**

Chapter 5

Man Pages for MCS

Monitoring data collection services for UM are provided by MCS.

See Monitoring Collector Service (MCS).

There are two executables for MCS, each with it's own man page:

- MCS Man Page - Unix and Windows command-line interface.
- Mcsds Man Page - Windows Service interface.

Note that these executables are not in the same "bin" directory as the platform native UM executables. Since it is a Java program, it has its own directory sub-tree, "MCS", with sub-directories "bin" and "lib". For example, the UMS version 6.14 MCS executables are under "UMS_6.14/MCS/bin".

However, MCS does use the underlying platform-specific UM library, so your proper paths should be set up.

5.1 MCS Man Page

Unix and Windows command-line interface.

```
Usage: MCS [options] [configfile]
Available options:
  -h, --help                 help
  -p, --property-keys        dump the list of supported property keys to stdout and
      exit
  -v, --validate             validate config file and exit
  -V, --verbose              be verbose about each message
  -x, --xsd                  dump the configuration XSD to stdout and exit
```

Description

The `MCS` command runs the Monitoring Collector Service (MCS). It can be run interactively from a shell or command prompt, or from a script or batch file. (For use as a Windows Service, see Mcsds Man Page.)

Exit Status

The exit status from MCS is 0 for success and some non-zero value for failure.

5.2 Mcsds Man Page

Windows Service interface.

See UM Daemons as Windows Services for general information about UM daemons as Windows Services.

```
Usage: mcsds [options] mcs_cfgfile_name
Available options:
  -h, --help                  display this help and exit
  -l, --service-log=FILE      set a logfile name for the service log.
  -p, --process-log=FILE      set a logfile name for the mcs process output.
  -s, --service=request       Install, remove or add a configuration file.
                              Examples: '-s install' to install the service with no
                                  config file
                                '-s install cfgfile.xml' to install the service
                                    with a configuration file of cfgfile.xml
                                '-s remove' to remove the service
                                '-s config cfg2.xml' to change or add a
                                    configuration file
  -e, --event-log-level       Update/set service logging level.  This is the
      minimum logging
                              level to send to the Windows event log.  Valid values
                                  are:
                                NONE - Send no events
                                INFO
                                WARN - default
                                ERROR
  -E, --env_var_file          update/set the environment Variable File
```

Description

The `mcsds` command has two functions:

- First, it lets the user supply Windows Service operating parameters, which the command saves into the Windows registry. Those operating parameters are subsequently used by the MCS Service. See Configure the Windows Service.
- Second, it provides Windows with the MCS daemon executable to run as a Service.

The **"mcs_cfgfile_name"** parameter specifies the file path for the MCS's XML configuration file. It is supplied in conjunction with the "-s config" option (see below). See MCS Configuration File for configuration details.

The **"-l"** option specifies a "service" log file path, which is saved in the Windows registry and subsequently by the Windows Service. Under normal circumstances, this log file will never be written to. It will be written if the MCS is unsuccessful in starting up as a service. (The normal MCS log file is configured differently, using the <log> element in the configuration file.)

The **"-p"** option specifies a "process" log file path, which is saved in the Windows registry and subsequently by the Windows Service. Under normal circumstances, this log file will never be written to. It will be written if the Java JVM writes to standard out or standard error, of if the MCS is not able to write to its configured log file.

Warning

By default, the MCS's configuration file uses <log type="console">. In this case, normal MCS logs are written to standard out and will be captured in the "process" log file. **This is not recommended as it leads to unbounded growth of the log file.** Users should set <log type="file"> and related attributes to control the log file sizes.

For **"-s install"** see Install the Windows Service.

For **"-s remove"** see Remove the Windows Service.

For **"-s config"** and **"-e"**, see Configure the Windows Service.

The **"-h"** option prints the man page and exits.

Exit Status

The exit status from MCS is 0 for success and some non-zero value for failure.

Attention

Do not use the task manager or the "kill" command to stop a UM daemon running as a Windows service. Use the Windows service control panel to stop the service.

Chapter 6

MCS Configuration File

The MCS configuration file must start with this line:

```
<?xml version="1.0" encoding="UTF-8" ?>
```

After that, the '<**um-mcs**>' element contains the rest of the configuration.

Here is a sample short configuration:

```
<?xml version="1.0" encoding="UTF-8" ?>
<um-mcs version="1.0">
  <daemon>
    <log type="file" frequency="daily" size="10" max-history="10"
         compression="zip">MCS.log</log>
    <pid-file>MCS.pid</pid-file>
  </daemon>
  <connector>
    <type>sqlite</type>
    <properties-file>/mcs/my_sqlite.properties</properties-file>
  </connector>
  <receiver-transport-opts>
    <config-file>/mcs/mcs_transp.cfg</config-file>
  </receiver-transport-opts>
</um-mcs>
```

Here is a sample "mcs_transp.cfg" file:

```
context default_interface "en0"
context resolver_unicast_daemon "en0"->10.1.2.3:12000
source transport tcp
```

This conforms to the Automatic Monitoring Sample.

Here is a sample "my_sqlite.properties" file:

```
sqlite_database_path=/mcs/ummon.db
```

When the daemon monitor is enabled, the first three lbm attribute option settings are recommended.

6.1 MCS Configuration Elements

6.1.1 MCS Element "<um-mcs>"

Container element which holds the MCS configuration. Also defines the version of the configuration format used by the file.

- **Children:** <daemon>, <connector>, <receiver-transport-opts>

XML Attributes:

Attribute	Description	Valid Values	Default Value
version	Version number of user's configuration file.	nonEmptyString	`"1.0"`

Example:

```
<?xml version="1.0" encoding="UTF-8" ?>
<um-mcs version="1.0">
  ...
</um-mcs>
```

6.1.2 MCS Element "<receiver-transport-opts>"

Supplies configuration for the monitoring receiver created by MCS.

- **Cardinality** (number of times element can be supplied): 0 .. 1
- **Parent:** <um-mcs>
- **Children:** <topic>, <wildcard-topic>, <config-file>

Example:

```
<?xml version="1.0" encoding="UTF-8" ?>
<um-mcs version="1.0">
  ...
  <receiver-transport-opts>
    ...
  </receiver-transport-opts>
  ...
</um-mcs>
```

6.1.3 MCS Element "<config-file>"

Supplies a UM configuration file for the monitoring receiver created by MCS.

- **Cardinality** (number of times element can be supplied): 0 .. 1
- **Parent:** <receiver-transport-opts>

Example:

```
<?xml version="1.0" encoding="UTF-8" ?>
<um-mcs version="1.0">
  ...
  <receiver-transport-opts>
    <config-file>mcs_transp.cfg</config-file>
    ...
  </receiver-transport-opts>
  ...
</um-mcs>
```

6.1.4 MCS Element "<wildcard-topic>"

Sets the monitoring receiver to use a wildcard pattern instead of a simple topic to subscribe to statistics data sent by UM components (applications, daemons, etc). If supplied, MCS Element "<topic>" is ignored.

If not supplied, MCS Element "<topic>" is used.

- **Cardinality** (number of times element can be supplied): 0 .. 1
- **Parent:** <receiver-transport-opts>

Example:

```
<?xml version="1.0" encoding="UTF-8" ?>
<um-mcs version="1.0">
  ...
  <receiver-transport-opts>
    <wildcard-topic>My.*Topic</wildcard-topic>
    ...
  </receiver-transport-opts>
  ...
</um-mcs>
```

6.1.5 MCS Element "<topic>"

The topic that the monitoring receiver will subscribe to get statistics data sent by UM components (applications, daemons, etc).

If not supplied, defaults to "/29west/statistics".

- **Cardinality** (number of times element can be supplied): 0 .. 1
- **Parent:** <receiver-transport-opts>

Example:

```
<?xml version="1.0" encoding="UTF-8" ?>
<um-mcs version="1.0">
  ...
  <receiver-transport-opts>
    <topic>MyStatsTopic</topic>
    ...
  </receiver-transport-opts>
  ...
</um-mcs>
```

6.1.6 MCS Element "<connector>"

Configures the connector that MCS should use to write statistics data. A connector is typically an interface to a database.

- **Cardinality** (number of times element can be supplied): 0 .. 1
- **Parent:** <um-mcs>
- **Children:** <type>, <properties-file>

Example:

```
<?xml version="1.0" encoding="UTF-8" ?>
<um-mcs version="1.0">
  ...
  <connector>
    ...
  </connector>
  ...
</um-mcs>
```

6.1.7 MCS Element "<properties-file>"

Specifies a Java properties file to pass to the connector.

See Monitoring Collector Service (MCS).

- **Cardinality** (number of times element can be supplied): 0 .. 1
- **Parent:** <connector>

Example:

```
<?xml version="1.0" encoding="UTF-8" ?>
<um-mcs version="1.0">
  ...
  <connector>
    <properties-file>my_sqlite.properties</properties-file>
    ...
  </connector>
  ...
</um-mcs>
```

6.1.8 MCS Element "<type>"

Defines the connector type to use. Supported types are "sqlite" or "hdfs".

If not supplied, "sqlite" is used.

See Monitoring Collector Service (MCS).

- **Cardinality** (number of times element can be supplied): 0 .. 1
- **Parent:** <connector>

Example:

```
<?xml version="1.0" encoding="UTF-8" ?>
<um-mcs version="1.0">
  ...
  <connector>
    <type>sqlite</type>
    ...
  </connector>
  ...
</um-mcs>
```

6.1.9 MCS Element "<daemon>"

Contains elements which define logging behavior and sets a file name for the service's Process ID.

See child elements for details.

- **Cardinality** (number of times element can be supplied): 0 .. 1
- **Parent:** <um-mcs>
- **Children:** <log>, <pid-file>

Example:

```
<?xml version="1.0" encoding="UTF-8" ?>
<um-mcs version="1.0">
  <daemon>
    ...
  </daemon>
  ...
</um-mcs>
```

6.1.10 MCS Element "<pid-file>"

Supplies the desired name of file in which the MCS writes its Process ID (PID).

- **Cardinality** (number of times element can be supplied): 0 .. 1
- **Parent:** <daemon>

Example: (MCS writes process ID to "mcs_pid.txt" file)

```
<?xml version="1.0" encoding="UTF-8" ?>
<um-mcs version="1.0">
  <daemon>
    <pid-file>mcs_pid.txt</pid-file>
    ...
  </daemon>
  ...
</um-mcs>
```

6.1.11 MCS Element "<log>"

Configures MCS logging behavior. The value contained within the `<log>...</log>` is a file name, but is only used if the "type" attribute is set to "file".

When the `type` attribute is set to `"file"`, the MCS supports "rolling" the log file, which consists a series of files over time so that no one file grows too large.

- **Cardinality** (number of times element can be supplied): 0 .. 1
- **Parent:** <daemon>

XML Attributes:

Attribute	Description	Valid Values	Default Value
type	Where to write log messages.	**"file"** - Write log messages to a file. **"console"** - Write log messages to standard output.	**"console"**
frequency	Time-frame by which to roll the log file.	**"disable"** - Do not roll the log file based on time. **"daily"** - Roll the log file at midnight. **"hourly"** - Roll the log file each hour.	**"disable"**
size	Size (in MB, i.e. 2**20, or 1,048,576) of current log file at which it is rolled. Specify 0 to disable rolling by log file size.	positiveInteger	**"10"** (10,485,760 bytes)
max-history	Number of rolled log files at which the oldest file is deleted when the current log file is rolled.	positiveInteger	**"10"**
compression	Enables compression for rolled log files.	**"none"** - Do not compress log files. **"zip"** - Compress log files using "zip" format. **"gzip"** - Compress log files using "gzip" format.	**"none"**

Example 1: (write log messages to standard out)

```
<?xml version="1.0" encoding="UTF-8" ?>
<um-mcs version="1.0">
  <daemon>
    <log type="console"/>
    ...
  </daemon>
  ...
</um-mcs>
```

Example 2: (write log messages to "mcs.log" file)

```
<?xml version="1.0" encoding="UTF-8" ?>
<um-mcs version="1.0">
  <daemon>
    <log type="file" frequency="daily">mcs.log</log>
    ...
  </daemon>
  ...
</um-mcs>
```

Chapter 7

Legacy Monitoring

Informatica recommends the use of Automatic Monitoring with user applications and daemons, and the use of the Monitoring Collector Service (MCS) to collect and record statistics. However, these features have not always been available (MCS was introduced in UM version 6.14).

Informatica will continue to support these older "legacy" monitoring methods in their current state and functionality. However, as we continue to develop and enhance the monitoring data and their collection and storage, these legacy methods will not always be similarly enhanced. Informatica recommends users of these legacy methods to migrate to automatic monitoring and MCS.

The legacy methods are:

- Self-Monitoring Applications using statistics API.
- "Web monitors" of the **Store** and **DRO** daemons.
- **Binary Daemon Statistics** of the Store and DRO daemons.
- Monitoring UM with the lbmmon API.

7.1 Self-Monitoring Applications

User applications can use the statistics API to sample UM library statistics. The application would typically record the library statistics, along with the applications own statistical data, and possibly raise alarms.

This method is considered "legacy". Informatica recommends users migrate to Automatic Monitoring with user applications and daemons, and Monitoring Collector Service (MCS) to collect and record statistics.

C programs wishing to self-monitor should use the APIs:

- **lbm_context_retrieve_src_transport_stats()** - see **Example lbmmsrc.c**.
- **lbm_context_retrieve_rcv_transport_stats()** - see **Example lbmrcv.c**.
- **lbm_context_retrieve_stats()**.
- **lbm_event_queue_retrieve_stats()**.

Java and .NET programs should use the APIs:

- **LBMContext.getSourceStatistics()**
  - see **Example lbmmsrc.java**.

- **LBMContext.getReceiverStatistics()**
  - see **Example lbmmrcv.java**.
- **LBMContext.getStatistics()**.
- **LBMEventQueue.getStatistics()**.

Chapter 8

Monitoring UM with the lbmmon API

The "lbmmon" library is used in two ways:

- Source: Applications and UM daemons use lbmmon to publish UM statistics.
- Receiver: A monitoring collector uses lbmmon to receive and parse UM statistics.

The lbmmon source APIs are usually not called directly by user applications. Instead, most users configure Automatic Monitoring, which implicitly uses lbmmon's source APIs. The lbmmon receiver APIs are called by the UM Monitoring Collector Service (MCS) or by a User-Developed Collector.

Informatica recommends the use of automatic monitoring and the MCS. This relieves the user from writing to the lbmmon API.

8.1 "lbmmon" API

An application requesting transport monitoring is called a monitor source, and an application accepting statistics is a monitor receiver. These monitoring objects deal only with transport session statistics and should not be confused with UM sources and UM receivers, which deal with UM messages. Statistics for both UM sources and UM receivers can be forwarded by a monitor source application.

Both a monitor source and monitor receiver consist of a monitoring context and control thread and two selectable modules:

- A format module, responsible for serializing and de-serializing the statistics. The proper transmission between monitor source and monitor receiver requires this serialization.
- A transport module that is responsible for sending and receiving statistics data.

You can substitute format and transport modules of your own choosing or creation. UM Monitoring provides the following sample modules:

- LBMMON CSV format module.
- LBMMON PB format module for protocol buffers.
- LBMMON LBM transport module.
- LBMMON SNMP transport module. (but see **deprecation**).
- LBMMON UDP transport module (but see **deprecation**).

To view the source code for all LBMMON transport modules, see LBMMON Example source code.

8.1.1 Monitoring Process Flow

The overall process flow appears in the diagram below.

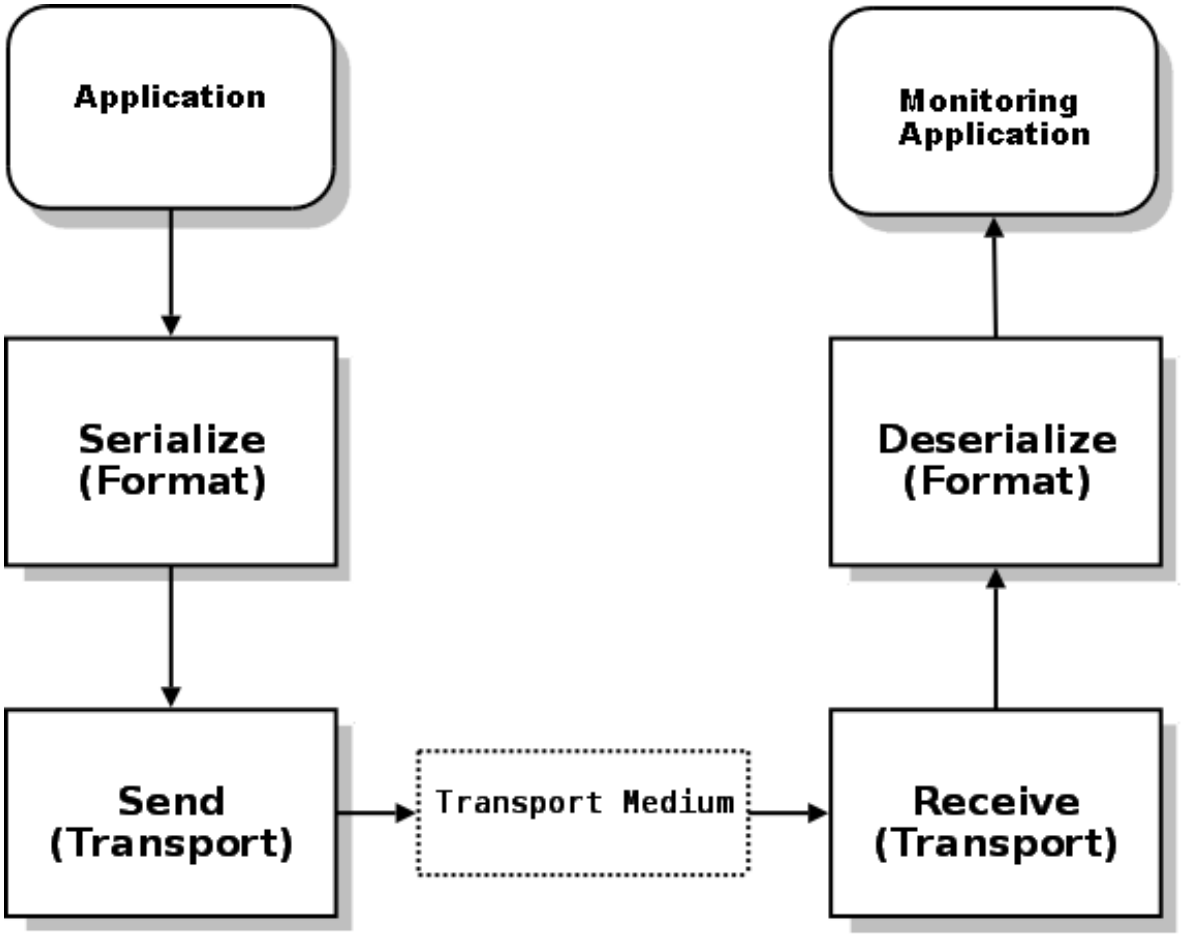

1. Your application creates the monitor source controller, specifying the format and transport modules to use. It also calls lbmmon functions to start monitoring an UM context, UM source or UM receiver.

2. The monitor source controller passes those statistics to the format module serialization function.

3. The monitor source controller passes the resulting serialized data to the transport module send function.

4. The transport module transmits the data over some transport medium (such as a network).

5. The monitor receiver controller transport module receives the serialized data. (Your monitoring application has already created the monitor receiver controller specifying the format and transport modules to use, along with the application callback functions to use upon the receipt of UM source or UM receiver statistics data.)

6. The monitor receiver controller calls the format module's de-serialization function.

7. Finally, the monitor receiver controller passes the statistics to your monitoring application via the specified application callback functions.

Your applications only calls functions in the controller modules, which calls the appropriate functions in the transport and format modules.

8.1.2 API Framework Flexibility

The segregation of UM Monitoring into control, format, and transport modules provides flexibility for monitor receivers in two ways.

- Allows you to use languages for which no UM API or binding exists.
- Allows you to use monitoring products which do not integrate with UM.

As an example, assume you have a Perl application which currently gathers statistics from other network applications (or, you are simply most comfortable working in Perl for such tasks). There is no Perl binding for UM. However, Perl can handle UDP packets very nicely, and can pick apart CSV data easily. By implementing a UDP transport module to be used by the monitor sources, your Perl application can read the UDP packets and process the statistics.

To use the UDP transport module, the lbmmon APIs must be used. The automatic monitoring feature cannot be configured to use the UDP transport module. However, note that the UDP transport module is deprecated.

The following sections present more discussion and sample source code about starting monitor sources, monitor receivers and the LBMMON format and transport modules.

8.1.3 Creating a Monitoring Source

Informatica recommends using Automatic Monitoring instead of creating your own monitoring source.

The following examples demonstrate how to use the UM Monitoring API to enable monitoring in your application.

First, create a monitoring source controller:

```
lbm_context_t * ctx;
lbm_src_t * src;
lbm_rcv_t * rcv;
lbmmon_sctl_t * monctl;

if (lbmmon_sctl_create(&monctl, lbmmon_format_csv_module(), NULL, lbmmon_transport_lbm_module(), NULL) == -
      1)
{
  fprintf(stderr, "lbmmon_sctl_create() failed\n");
  exit(1);
}
```

The above code tacitly assumes that the ctx, src, and rcv variables have been previously assigned via the appropriate UM API calls.

The monitoring source controller object must be passed to subsequent calls to reference a specific source controller. One implication of this is that it is possible to have multiple monitoring source controllers within a single application, each perhaps monitoring a different set of objects.

In the above example, the default CSV format module and default UM transport module are specified via the provided module functions lbmmon_format_csv_module() and lbmmon_transport_lbm_module().

8.1.4 Specifying the Object to Monitor

Once a monitoring source controller is created, the application can monitor a specific context using:

```
if (lbmmon_context_monitor(monctl, ctx, NULL, 10) == -1)
{
  fprintf(stderr, "lbmmon_context_monitor() failed\n");
  exit(1);
}
```

The above example indicates that statistics for all transports on the specified context will be gathered and sent every 10 seconds.

A UM source can be monitored using:

```
if (lbmmon_src_monitor(monctl, src, NULL, 10) == -1)
{
  fprintf(stderr, "lbmmon_src_monitor() failed\n");
  exit(1);
}
```

Finally, an UM receiver can be monitored using:

```
if (lbmmon_rcv_monitor(monctl, rcv, NULL, 10) == -1)
{
  fprintf(stderr, "lbmmon_rcv_monitor() failed\n");
  exit(1);
}
```

The two above examples also request that statistics for all transports on the specified source or receiver be gathered and sent every 10 seconds.

Statistics can also be gathered and sent in an on-demand manner. Passing 0 for the Seconds parameter to **lbmmon_context_monitor()**, **lbmmon_src_monitor()**, or **lbmmon_rcv_monitor()** prevents the automatic gathering and sending of statistics. To trigger the gather/send process, use:

```
lbmmon_sctl_sample(monctl);
```

Such a call will perform a single gather/send action on all monitored objects (contexts, sources, and receivers) which were registered as on-demand.

As part of application cleanup, the created monitoring objects should be destroyed. Each individual object can be de-registered using **lbmmon_context_unmonitor()**, **lbmmon_src_unmonitor()**, or **lbmmon_rcv_unmonitor()**. Finally, the monitoring source controller can be destroyed using:

```
lbmmon_sctl_destroy(monctl);
```

Any objects which are still registered will be automatically de-registered by **lbmmon_sctl_destroy()**.

8.1.5 Receiving Monitoring Data

Informatica recommends using the Monitoring Collector Service (MCS) instead of writing your own collector.

To make use of the statistics, an monitoring collector application must be running that receives the monitor data. This application creates a monitoring receive controller, and specifies callback functions which are called upon the receipt of source or receiver statistics data.

See **Example lbmmon.c** for C code implementing a monitoring receive controller. Or see **Example lbmmon.java** for equivalent Java code.

8.2 Monitoring Transport Modules

The lbmmon library comes with three pre-written transport modules:

- The LBM Transport Module - recommended for applications and daemons at UM version 6.14 and beyond.
- The UDP Transport Module - legacy.
- The SNMP Transport Module - legacy.

For an application or UM daemon to publish its UM statistics, you can choose the desired transport module, typically by configuration (**monitor_transport (context)** and **monitor_transport (event_queue)**).

Each transport module can have options that control its behavior. Those options are supplied via an option string. The exact format of the option string can vary according to the format module being used. The format options string is typically supplied by configuration (**monitor_transport_opts (context)** and **monitor_transport_opts (event_queue)**).

8.2.1 The LBM Transport Module

The LBM transport module publishes statistics using a UM source.

The transport options string is in the form of name/value pairs separated by semicolons. The following name/value pairs are available:

- **config=file_name** specifies a configuration file. This file is processed in a manner similar to **lbm_config()**. However, unlike **lbm_config()**, the current default attributes are not changed. Instead, the options parsed from the configuration file are applied only to the UM objects created by the module.
- **topic=topic_name** specifies the topic name to use for sending and receiving statistics. By default, the topic `/29west/statistics` is used.
- **wctopic=topic_pattern** specifies (for monitor receivers only) a wildcard pattern to be used to receive statistics.
- **context|option_name=option_value** specifies UM a configuration option for the monitoring context.
- **source|option_name=option_value** specifies UM a configuration option for the source used to publish monitoring data.
- **receiver|option_name=option_value** specifies UM a configuration option for the receiver used to subscribe to monitoring data.
- **wildcard_receiver|option_name=option_value** specifies UM a configuration option for the wildcard receiver used to subscribe to monitoring data.

As an example, assume your application needs to use a special configuration file for statistics. The following call allows your application to customize the UM transport module using the configuration file stats.cfg.

```
lbmmon_sctl_t * monctl;
const char * tropt = "config=stats.cfg";

if (lbmmon_sctl_create(&monctl, lbmmon_format_csv_module(), NULL, lbmmon_transport_lbm_module(), tropt) ==
      -1)
{
  fprintf(stderr, "lbmmon_sctl_create() failed\n");
  exit(1);
}
```

If your application also needs to use a specific topic for statistics, the following code specifies that, in addition to the configuration file, the topic StatisticsTopic be used for statistics.

```
lbmmon_sctl_t * monctl;
const char * tropt = "config=stats.cfg;topic=StatisticsTopic";

if (lbmmon_sctl_create(&monctl, lbmmon_format_csv_module(), NULL, lbmmon_transport_lbm_module(),
tropt) == -1)
{
  fprintf(stderr, "lbmmon_sctl_create() failed\n");
  exit(1);
}
```

It is important to use the same topic and configuration for both monitor sources and receivers. Otherwise your applications may send the statistics, but the monitor receiver won't be able to receive them.

To view the source code for the LBM transport module, see **Source code for lbmmontrlbm.c**.

8.2.2 The UDP Transport Module

Starting in UM 6.14, monitoring transports UDP and SNMP are deprecated in favor of LBM. We do not plan to remove existing UDP or SNMP functionality, and will continue to support them in their current states. But we do not plan to enhance UDP or SNMP in the future.

In particular, UDP datagrams are limited in size to 64K bytes, but when a Store daemon is enabled for protocol buffer format, message sizes can exceed that limit. This is not a risk for CSV format.

The UDP transport module publishes statistics using a simple UDP datagram. It can send or receive UDP unicast, UDP broadcast, and UDP multicast.

Note

> To use the UDP transport module, the lbmmon APIs must be used. The automatic monitoring feature cannot be configured to use the UDP transport module.

The transport options string is in the form of name/value pairs separated by semicolons. The following name/value pairs are available:

- **address=dest_ip** specifies the unicast IP address to which statistics are sent via UDP. Applicable to sender only.
- **port=port_num** is the IP port packets are sent to. Defaults to 2933.
- **interface=interface_spec** specifies the network interface over which multicast UDP is sent or received. See **Specifying Interfaces** for formats.
- **mcgroup=ip** is the multicast group on which to send and receive UDP packets.
- **bcaddress=ip** specifies the broadcast address to which UDP packets are sent. Applicable to sender only.
- **ttl=val** specifies the TTL for each multicast UDP packet. Applicable to sender only.

To view the source code for the UDP transport module, see **Source code for lbmmontrudp.c**.

8.2.3 The SNMP Transport Module

Starting in UM 6.14, monitoring transports UDP and SNMP are deprecated in favor of LBM. We do not plan to remove existing UDP or SNMP functionality, and will continue to support them in their current states. But we do not plan to enhance UDP or SNMP in the future.

To take advantage of new monitoring capabilities, Informatica requests that users migrate to the LBM transport.

The SNMP transport module publishes statistics using a UM source, much like The LBM Transport Module. However, for user convenience, some configuration options are hard-coded to be compatible with the UM SNMP agent component.

To view the source code for the SNMP transport module, see **Source code for lbmmontrlbmsnmp.c**.

8.3 Monitoring Format Modules

The lbmmon library comes with two pre-written format modules:

- The PB Format Module - recommended for applications and daemons at UM version 6.14 and beyond.
- The CSV Format Module - legacy.

For an application or UM daemon to publish its UM statistics, you can choose the desired format module. For UM versions prior to 6.14, only CSV was available. For UM 6.14 and beyond, you can choose CSV or PB, typically by configuration (**monitor_format (context)** and **monitor_format (event_queue)**).

A statistics collector subscribes to UM statistics. For UM versions prior to 6.14, only CSV was available. For UM 6.14 and beyond, both are available for use, depending on the format of statistics messages received.

Pre-6.14 collectors (with no knowledge of PB) will work the same as they always have when run with 6.14 and beyond. But they will not process UM statistics arriving in PB format. Informatica recommends updating collector applications to support both formats.

Each format module can have options that control its behavior. Those options are supplied via an option string. The exact format of the option string can vary according to the format module being used. In UM versions 6.14 and beyond, the format options string is typically supplied by configuration (**monitor_format_opts (context)** and **monitor_format_opts (event_queue)**).

8.3.1 The PB Format Module

The PB format module formats UM statistics as `Google Protocol Buffers`.

The format options string is in the form of name/value pairs separated by semicolons. The following name/value pairs are available:

- **passthrough=mode** - used by monitoring receiver.

Where "mode" can be one of three values:

- **off** - The receive controller will deserialize the message for you and deliver via the LBM statistics C structures or Java classes. **This is the default.**
- **on** - the receive controller will pass the received message directly to the callback without any deserializing of either PB or CSV messages. The application must be able to handle either raw CSV messages or protocol buffers.
- **convert** - No deserialization. Protocol buffer messages are passed directly to the application. CSV messages are converted into protocol buffers, which passed directly to the application.

The advantage of "convert" is that the collector can accept both older CSV and newer protocol buffer statistics, but your code can be written to only understand protocol buffers.

For monitoring receivers (collectors), Informatica recommends the PB format module with the "passthrough=convert" format option. This allows the receive controller to correctly process both PB *and* CSV statistics.

To view the source code for the PB format module, see **Source code for lbmmonfmtpb.c**.

8.3.2 The CSV Format Module

Starting in UM 6.14, CSV is deprecated in favor of The PB Format Module. We do not plan to remove existing CSV functionality, and we will continue to support it in its current state. But we do not plan to enhance CSV in the future.

The CSV format module formats UM statistics as simple comma-separated values.

The format options string is in the form of name/value pairs separated by semicolons. The following name/value pairs are available:

- **separator=character**
  specifies a single character to be used as field separator. Defaults to comma.
- **passthrough=mode** - used by monitoring receiver.
  where "mode" is "off", "on", or "convert". Defaults to "off".

To view the source code for the CSV format module, see **Source code for lbmmonfmtcsv.c**.

Chapter 9

Startup/Shutdown Procedures

In a multicast environment, only the applications and monitoring tools need to be started. If using Persistence, the Store daemon (umestored) also needs to be started. Likewise, use of the DRO requires starting the DRO daemon (tnwgd).

In a unicast-only environment, one or more resolver daemons (lbmrd) are typically required. It is recommended that you start the lbmrd before starting the applications.

Informatica recommends that you shutdown applications using UM sources and receivers cleanly, even though UM is able to cope with the ungraceful shutdown and restart of applications and UM daemons.

A failed assertion could lead to immediate application shutdown. If opting to restart a UM client or lbmrd, no other components need be restarted. Failed assertions should be logged with Informatica support.

9.1 Topic Resolution

Topic Resolution (TR) is the process by which subscribers discover a topic's publisher's **transport session** information. The subscriber uses this information to join the source's transport session, which then delivers published messages to the subscriber. With **Multicast UDP TR**, topic resolution does not need to be started or shutdown. But TR does require network resources, and if not configured properly can lead to temporary or permanent **deafness** in receivers, as well as other problems. See **Topic Resolution Overview** for more detailed information.

Applications cannot deliver messages until topic resolution completes. UM monitoring statistics are active before all topics resolve. In a large topic space (e.g. 10,000 topics) topic resolution messages may be 'staggered' or rate controlled, taking potentially several seconds to complete.

For example, 10,000 topics at the default value of 1,000 for **resolver_initial_advertisements_per_second (context)** will take 10 seconds to send out an advertisement for every topic. If all receiving applications have been started first, fully resolving all topics may not take much more than 10 seconds. The rate of topic resolution can also be controlled with the **resolver_initial_advertisement_bps (context)** configuration option. Topic advertisements contain the topic string and approximately 110 bytes overhead. Topic queries from receivers contain no overhead, only the topic string.

Your UM development or administration team should anticipate the time and bandwidth required to resolve all topics when all applications initially start. This team should also establish any restarting restrictions.

Operations staff typically don't have any operational tasks related to topic resolution aside from monitoring hosts' CPU and bandwidth usage.

9.2 UM Applications

Your UM development team should provide you with the application names, resident machines and startup parameters, along with a sequence of application/daemon startups and shutdowns.

The following lists typical application startup errors.

- Lack of resources
- License not configured - LOG Level 3: CRITICAL: LBM license invalid [LBM_LICENSE_FILENAME nor LBM_LICENSE_INFO are set]
- Cannot bind port - lbm_context_create: could not find open TCP server port in range.

  Too many applications may be running using the UM context's configured port range on this machine. This possibility should be escalated to your UM development team.

  Application is possibly already running. It is possible to start more than one instance of the same UM application.
- Invalid network interface name / mask - lbm_config: line 1: no interfaces matching criteria
- Multiple interfaces detected - LOG Level 5: WARNING: Host has multiple multicast-capable interfaces; going to use [en1][10.10.10.102]

This message appears for multi-homed machines. UM is not explicitly configured to use a single interface. This may not cause an issue but requires configuration review by your UM development team.

9.3 Indications of Possible Application Shutdown

A UM application shutdown may not be obvious immediately, especially if you are monitoring scores of applications. The following lists events that may indicate an application has shutdown.

- The Process ID disappears. Consider a method to monitor all process IDs (PIDs).
- You notice the existence of a core dump file on the machine.
- UM statistics appear to reduce in volume or stop flowing.
- In an Application Log, one or more End Of Session (EOS) events signaling the cessation of a transport session. This may indicate a source application may have shut down. Your UM development team must explicitly log LBM_MSG_EOS events. Some EOS events may be delayed for some transports.
- In an Application Log, disconnect events (LBM_SRC_EVENT_DISCONNECT) for unicast transports (if implemented) indicate UM receiver applications have shutdown.

9.4 Unicast Topic Resolver (lbmrd)

If not using multicast topic resolution, one or more instances of lbmrd must be started prior to stating applications. Unicast resolver daemons require an XML configuration file and multiple resolver daemons can be specified by your UM development team for resiliency. For more information on Unicast Topic Resolution, see **Unicast UDP TR**.

Execute the following command on the appropriate machine to start a unicast topic resolver (lbmrd) from command line:

```
lbmrd --interface=ADDR -L daemon_logfile.out -p PORT lbmrd.cfg
```

For more information on the lbmrd command-line, see **Lbmrd Man Page**.

To stop an lbmrd that is running as a Windows service, use the Windows service control panel to stop it. Otherwise, kill the PID. If an lbmrd terminates, you need to restart it.

Observe the lbmrd logfile for errors and warnings

To make the lbmrd a Windows Service, see UM Daemons as Windows Services.

If running multiple lbmrds and an lbmrd in the list becomes inactive, the following message appears in the clients' log files:

```
unicast resolver "<ip>:<port>" went inactive
```

If all unicast resolver daemons become inactive, the following message appears in the clients' log files:

```
No active resolver instances, sending via inactive instance
```

After all topics are resolved, daemons do not strictly need to be running unless you restart applications. Resolver daemons do not cache or persist state and do not require other shutdown maintenance.

9.5 Running Persistent Stores (umestored)

Stores can operate in disk-backed or memory-only mode specified in the Store's XML configuration file. Disk backed Stores are subject to the limitations of the disk hardware. For high performance applications, Informatica recommends solid-state disks local to the physical host running the Store. Those solid-state disks should be optimized for writing and should be dedicated to UM Store usage only (don't share it with other databases or disk-intensive programs).

There are a few scenarios where you need to start a Store:

1. Bringing a whole system up from scratch (applications, Stores, etc.). In this case, you typically want to Eliminate Past State.
2. Restarting a Store after a problem (unplanned shutdown, crash, power outage, etc.). In this case, you typically want to Retain Past State.
3. Restarting a Store after a planned maintenance window. In this case, you might Eliminate Past State or Retain Past State; the choice is yours.

For details on starting a Store, see Starting a Store.

Similarly, there are a few scenarios where you need to shut down a Store:

1. Regular system shutdown, as for a planned maintenance window.
2. A problem is detected and you have decided restarting the Stores will help.

For details on shutting down a Store, see Shutting Down a Store.

When you shut down a Store with the intention of restarting it, or if a Store fails, you should wait to restart for more than the time specified by the **ume_store_activity_timeout (source)** (defaults to 10 seconds). I.e. you should wait for the publishers to time out the old Store instance before you bring up the new instance.

9.5.1 Eliminate Past State

Sometimes when you start a Store, you want to eliminate past state. That is, you don't want any subscribers to recover older messages. For example, if bringing a whole system up from scratch. Or many users do a clean start after every maintenance window.

In this case, you must cleanly restart all publishers, subscribers, and Stores. It is recommended to have every component in the down state simultaneously before restarting any of them. Otherwise you risk having a newly restarted component learning old state from a not-yet-restarted component.

Part of cleanly restarting all Stores is deleting their state and cache files. If you fail to delete the state and cache files from one or more Stores, subscribers might start up and recover (replay) old messages that it had already processed. Or subscribers can be temporarily **deaf** to some set (potentially large) set of newly published messages. Please ensure proper deletion of state and cache files prior to restarting Stores when you intend to eliminate past state.

9.5.2 Retain Past State

Sometimes when you start a Store, you want to retain past state. That is, you want to restart Stores in such a way that applications can pick up where they left off, and recover lost messages if necessary. For example, if restarting a store after a problem.

You should restart the Store with the state and cache files intact. When the Store restarts, it will read and restore the previous state. It will then attempt to recover as many missed messages from the sources, as possible. Then the Store resumes normal operation.

Note that if the cache files are very large, it might take a significant amount of time for the Store to initialize. If this time is objectionable, you may choose a **Limit Initial Restore with Restore-Last**.

There are times where it is not possible to retain the past state. For example, a failure of the disk holding the state and cache files. Or a failure of the Store's host, and the Store is restarted on a new host. In that case, care must be taken to ensure that the applications will properly restore as much of their previous state as possible.

For example, let's say that two Stores out of a three-Store QC group fail and lose their state and cache files. You have no choice but to restart those Stores cleanly, without state and cache. Note that in this example, since only one Store is running (the "stateful" Store), the applications lose quorum and pause their execution until Quorum is restored.

In this dual-failure case, it is important ∗*not*∗ to restart both failed Stores at the same time. To do so could result in applications registering with the two cleaned Stores first, and resetting their own internal states. This could lead to subscriber **deafness**, or replay of previously processed messages.

Instead, you must restart one of the cleaned Stores and allow the applications to register with the clean Store and the stateful Store. Allow some time for the the cleaned Store to collect some state from the applications (typically requires several seconds). Then the other cleaned Store can be restarted.

9.5.3 Starting a Store

Unix users can start a Store with following command from a shell prompt or script:

```
umestored config-file.xml
```

See **Umestored Man Page** for details on the umestored command-line.

Windows users typically install the Store as a Windows service (see UM Daemons as Windows Services). Windows has a control panel for starting services.

Memory-only Stores do not save state in disk files; they always start up without past state.

Disk-based Stores create two types of state files:

- Cache file - contains the actual persisted messages, and can grow to be very large over time. Each cache file created corresponds to a specific publisher source. It is important to ensure that there is enough disk space to record the desired amount of persisted data. See **Topic Option "repository-disk-file-size-limit"**.
- State file - contains information about the current state of each client connection. These files is much smaller.

A Store signals it has completed initialization by logging a message of the form:

```
Store-5688-5546: Store "StoreName" ready to accept registrations
```

If a Store process is configured to have more than one Store instance, this message will be logged for each configured Store instance (see **Store Processes and Instances**).

The time required for a Store to complete initialization depends on the size of the cache file. For very large cache files, the initialization time can become objectionably long. see **Limit Initial Restore with Restore-Last** for a solution.

9.5.4 Shutting Down a Store

If the Store is running as a Windows service, use the Service Manager to stop the Windows service.

Otherwise kill the PID. You can find the PID in the configured PID file; see **UMP Element "<pidfile>"**.

Warning

Do not perform a "forced kill" (in Unix "kill -9"). This can cause corruption of the state and/or cache files.

9.5.5 Common Startup and Shutdown Issues

- Cache and state directories don't exist. It is the user's responsibility to pre-create those directories. See **Store Option "disk-state-directory"** and **Store Option "disk-cache-directory"**.
- Disk space - Cache files contain the actual persisted messages, and can grow to be very large over time. It is important to ensure that there is enough disk space to record the appropriate amount of persisted data. See **Topic Option "repository-disk-file-size-limit"**.
- Configuration error - UM parses a Store's XML configuration file at startup, reporting errors to standard error.
- Configuration error - UM reports other configuration errors the Store's log file.
- Missing license details.

9.6 DRO (tnwgd)

When a DRO starts it discovers all sources and receivers in the topic resolution domains to which it connects. This results in a measurable increase and overall volume of topic resolution traffic and can take some time to complete

depending upon the number of sources, receivers, and topics. The rate limits set on topic resolution also affect the time to resolve all topics.

See also Topic Resolution.

9.6.1 Starting a DRO

Execute the following command on the appropriate machine to start a DRO (tnwgd) from command line:

```
tnwgd config-file.xml
```

Informatica recommends:

- Record tnwgd PID to monitor process presence for failure detection.
- Monitor the tnwgd logfile for errors and warnings.

For more information on the tnwgd command-line, see **Tnwgd Man Page**. To make the DRO a Windows Service, see UM Daemons as Windows Services.

9.6.2 Restarting a DRO

Perform the following procedure to restart a DRO.

1. If the DRO is still running as a Windows service, use the Windows service control panel to stop the process. Otherwise, kill the PID.
2. Wait 20-30 seconds to let timeouts expire. After a restart new proxy sources and receivers must be created on the DRO. Applications will not use the new proxies until the transport timeout setting expires for the old connections. Until this happens, applications may appear to be **deaf** since they are still considering themselves as connected to the "old" DRO proxies. Therefore, do not rapidly restart the DRO.
3. Run the command: tnwgd config-file.xml

9.7 UM Daemons as Windows Services

On the Microsoft Windows platform, the UM daemons can be used either from the command line or as Windows Services.

Attention

> Do not use the task manager or the "kill" command to stop a UM daemon running as a Windows service. Use the Windows service control panel to stop the service. In particular, if the persistent Store is killed non-gracefully, it can leave its files in an inconsistent state.

The UM daemons available as Windows Services are:

Executable File	Description	Service Display Name	Man Page
lbmrds.exe	UDP-based Unicast Topic Resolver	"LBMR Store Daemon"	**man page**
srsds.exe	TCP-based Topic Resolver	"UM Stateful Topic Resolution Service"	**man page**
mcsds.exe	Monitoring Collector Service	"UM Monitoring Collector Service"	man page
storeds.exe	Persistent Store	"UME Store Daemon"	**man page**
tnwgds.exe	Dynamic Router (DRO)	"Ultra Messaging Gateway"	**man page**

Note that the Ultra Messaging Manager daemon (`"ummd"`) is not offered as a Windows Service at this time.

Also note that the UM daemons were not designed to run multiple instances of the service on the same host. See **known limitation 9337**.

As of UM version 6.12 and beyond, the above UM daemons work similarly with respect to running as a Windows Service. See the individual man pages for differences.

For each service, the executable file (e.g. "storeds.exe") is used for two purposes:

- Windows invokes the executable to run the service.
- The user manually invokes the executable to Configure the Windows Service.

That second purpose, configuring the UM Windows Service, consists of running the executable with one or more command-line options to store desired operational parameters into the Windows registry. This makes those parameters available to the service when Windows starts the service.

First, make sure that your UM license key is provided in a way that the service can access it. In particular, if you are using an environment variable to set the license key, it must be a system environment variable, not user.

Once your license key is ready, there are 4 overall steps to running a UM daemon as a Windows Service:

1. Install the Windows Service
2. Configure the Daemon
3. Configure the Windows Service
4. Start the Windows Service

All 4 steps must be completed before the Service can be used.

9.7.1 Install the Windows Service

There are two ways to install a UM daemon as a Windows Service:

- Product package installer.
- Command line.

Product package installer

When installing the product using the package installer, the dialog box titled "Choose Components" provides one or more check boxes for UM daemons to be installed as services. You may check any number of the boxes and proceed with the installation.

Note that for any box *not* checked, the software for that daemon is still copied onto the machine. This allows for installation as a Windows Service at a later time using the Command Line method.

Command line

If a daemon was not installed as a Windows Service from the product's package installer (possibly because the package installer was not used), daemons can be installed at a later time from the command line.

1. Open a Windows Command Prompt, enabling Administrator access. (One way to do this is to right-click on the Command Prompt icon and select "More > Run as administrator".)
2. Run the Service executable with the "-s install" command-line option. For example:

   ```
   umestoreds -s install
   ```

   (Note: **lbmrds** uses upper-case "-S".)

9.7.2 Configure the Daemon

UM daemons are configured via XML configuration files. These files must be created and managed by the user. Each individual daemon needs its own separate XML configuration file.

Informatica recommends developing and testing the daemon configuration files interactively, using the command-line interface of each daemon. Do not run the daemon as a Windows Service until the daemon configuration has been validated and tested. This provides the fastest test cycle while the configuration is being developed and finalized.

The configuration files should be located on the hosts that are intended to run the daemons in files/folders of the user's choosing.

For more information on configuring and running the daemons interactively, see:

Executable File	Description	Configuration Details	Man Page
lbmrds.exe	UDP-based Unicast Topic Resolver	**lbmrd Configuration File**	**man page**
srsds.exe	TCP-based Topic Resolver	**SRS Configuration File**	**man page**
mcsds.exe	Monitoring Collector Service	MCS Configuration File	man page
storeds.exe	Persistent Store	**Configuration Reference for Umestored**	**man page**
tnwgds.exe	Dynamic Router (DRO)	**DRO Configuration Reference**	**man page**

9.7.3 Configure the Windows Service

"Configure the Windows Service" is different from Configure the Daemon. Configuring a UM Service provides Windows-specific operational parameters to the UM Daemon, which are not configurable via the Daemon Configuration. For example, you need to tell the Service where to find the Daemon Configuration file.

At this point, you should have the Daemon XML configuration file(s) prepared and available on the host which is to run the desired daemon(s) (See Configure the Daemon). And you should have tested the configuration using the daemon interactively to verify is correct operation.

Configuring the Service consists of running the Service executable from a Windows Command Prompt with one or more command-line options to store desired operational parameters into the Windows registry. This makes those parameters available to the service when Windows starts the service.

Attention

> You need the Command Prompt window running as Administrator. (One way to do this is to right-click on the Command Prompt icon and select "More > Run as administrator".)

There are several operational parameters that are common across all of the UM Windows Services:

- Setting up the Windows Event Logger
- Setting up the Environment Variables file
- Setting up the Daemon Configuration file
- Service installation or removal

Each Service has additional parameters that are specific to that Service; see each Service's man page:

Executable File	Description	Configuration Details	Man Page
lbmrds.exe	UDP-based Unicast Topic Resolver	**lbmrd Configuration File**	**man page**
srsds.exe	TCP-based Topic Resolver	**SRS Configuration File**	**man page**
mcsds.exe	TCP-based Topic Resolver	MCS Configuration File	man page
storeds.exe	Persistent Store	**Configuration Reference for Umestored**	**man page**
tnwgds.exe	Dynamic Router (DRO)	**DRO Configuration Reference**	**man page**

Daemon Configuration File

The UM daemons require a configuration file. You must configure the Windows Service with the path to the daemon's configuration file. This is done with the `"-s config"` command-line option. For example:

```
umestoreds -s config c:\UM\store_config.xml
```

This saves the file path into the Windows registry. Subsequently, each time the UME Store Windows Service starts, it will read that file to configure the Store daemon. (Note: **lbmrds** uses upper-case "-S".)

Windows Event Logger

The UM daemons write their log messages to their log files. The UM Windows Services have the option of also writing the log messages to the Windows Event Logger.

UM Log messages are categorized into different severity levels: "info", "notice", "warning", "err", "alert", "emerg". By default, the UM Windows Services will write log messages of category "warning" and above to the Windows Event Log.

If desired, the category can be configured with the `"-e"` command-line option. For example:

```
umestoreds -e notice
```

This saves the "notice" category into the Windows registry. Subsequently, each time the UME Store Windows Service starts, it will log message of "notice" and above to the Windows Event Log.

Be aware that setting the severity level below "warning" can result in very many messages being written to the Windows Event Log. Also be aware that messages of *all* severity levels are written to the daemon's log file, independent of the `"-e"` setting.

Environment Variables File

The UM daemons occasionally can have useful features enabled through the use of environment variables. Most of the UM Windows Services allow the use of an optional disk file containing environment variable assignments. Each time the Service starts, that file is read and the environment variables are set for that daemon process. The SRS Windows service does not currently support this.

If desired, the Environment Variable file path can be configured with the `"-E"` command-line option. For example:

```
umestoreds -E c:\UM\store_env.txt
```

This saves the file path into the Windows registry. Subsequently, each time the UME Store Windows Service starts, it will read that file and set its environment variables.

The format of that file is shown by this example:

```
# Environment Variable File for UME Store
LBM_DEBUG_MASK="0xC384"
LBM_DEBUG_FILENAME="c:\temp\store_debug.txt"
```

The quote marks are required.

If you want to stop using an environment variable file, you must remove its entry from the Windows registry with the `"-U"` command-line option. For example:

```
umestoreds -U
```

This removes the environment variable file path from the Windows registry. The next time the UME Store Windows Service starts, it will not set its environment. Note that this operation does *not* remove the environment file.

9.7.4 Start the Windows Service

Windows Services are controlled by the "Services" control panel. See your Windows documentation for information on controlling Windows Services.

9.7.5 Remove the Windows Service

There are two ways to remove the UM daemons as Windows Services:

- Use the Windows uninstaller.
- Manually remove the service using the daemon's executable program.

Windows Uninstaller

If the UM package was installed by the Package Installer, using the normal Windows "Add or Remove Programs" control panel removes the Windows Service, as well as also removing the installed files.

Manual Service Removal

You can remove a UM Windows Service manually using the `"-s remove"` command-line option. For example:

```
umestoreds -s remove
```

This removes the UM Store as a Windows Service. (Note: **lbmrds** uses upper-case "-S".)

Note that this does not uninstall any of the UM software. It only removes the the daemon as a Windows Service.

9.8 UM Analysis Tools

Tools available to analyze UM activity and performance.

9.8.1 Packet Capture Tools

- Wireshark is an open-source network packet analysis tool, for which Informatica provides 'dissectors' describing our packet formats. It is used to open and sift through packet capture files, which can be gathered by a variety of both software and hardware tools.
- Tshark is a command-line version of Wireshark.
- Tcpdump is the primary software method for gathering packet capture data from a specific host. It is available on most Unix-based systems, though generally gathering packet captures with the tool requires super-user permissions.

For more information about Wireshark please visit https://www.wireshark.org/. (The UM plugins are part of the current release.)

9.8.2 Resource Monitors

- Top is a system resource monitor available on Linux/Unix that presents a variety of useful data, such as CPU use (both average and per-CPU), including time spent in user mode, system mode, time processing interrupts, time spent waiting on I/O, etc.
- Microsoft Windows System Resource Manager manages Windows Server 2008 processor and memory usage with built-in or custom resource policies.
- **prstat** is a resource manager for Solaris that provides similar CPU and memory usage information.

9.8.3 Process Analysis Tools

- **pstack** dumps a stack trace for a process (pid). If the process named is part of a thread group, then

  pstack traces all the threads in the group.
- **gcore** generates a core dump for a Solaris, Linux, and HP-UX process. The process continues after core has been dumped. Thus, gcore is especially useful for taking a snapshot of a running process.

9.8.4 Network Tools

- **netstat** provides network statistics for a computer's configured network interfaces. This extensive command-line tool is available on Linux/Unix based systems and Windows operating systems.
- **wget** is a Linux tool that captures content from a web interface, such as a UM daemon web monitor. Its features include recursive download, conversion of links for off-line viewing of local HTML, support for proxies, and more.
- **netsh** is a Windows utility that allows local or remote configuration of network devices such as the interface.

9.8.5 UM Tools

- lbmmoncache is a utility that monitors both source notification and source/receiver statistics. `Contact UM Support` for more information about this utility.
- lbtrreq restarts the topic resolution process. `Contact UM Support` for more information about this utility.

9.8.6 UM Debug Flags

The use of UM debug flags requires the assistance of UM Support. Also refer to the following Knowledge Base articles for more information about using debug flags.

- `Using debug flags`
- `Using debug flags in application code`
- `Using debug flags with daemons`
- `Using debug flags with daemons running as windows services`

Chapter 10

Troubleshooting UM Applications

10.1 Application Crashes

These are common application and daemon liveness issues.

10.1.1 Persistent Store Crashed

Symptom	Cause	Resolution
umestored process (PID) not running or a core file exists		Contact Informatica Support

10.1.2 DRO Crashed

Symptom	Cause	Resolution
tnwgd process (PID) not running or a core file exists		Contact Informatica Support

10.1.3 Excessive Resource Use

Symptom	Cause	Resolution
Excessive CPU usage, often 100%	• Application thread may be deadlocked or spinning. • Heap fragmentation on source (with Smartheap) • Overloaded transports • Improper allocation of transports and applications causing kernel-level copying of messages	Check "no-topic-messages" statistic. Check if SI% (time spent processing system interrupts) is high; if so there may be too many contexts interested in the same transport data Contact Informatica Support

10.1.4 Crash on deletion of an object

Symptom	Cause	Resolution
Application doesn't shutdown well -or- Application crashes during shutdown or the deletion of an object	Improper object deletion	See LBM Deletion Best Practices

10.1.5 Datagram size mismatches

Symptom	Cause	Resolution
Log message: endpoint portal [s] unable to send: datagram size mismatch. transport_XXX_↩ datagram_max_size must be properly configured.	Datagram sizes are inconsistently configured across the system.	Coordinate the maximum datagram size among the following configuration options. • **transport_tcp_datagram↩ _max_size (context)** • **transport_lbtrm_↩ datagram_max_size (context)** • **transport_lbtru_↩ datagram_max_size (context)** • **transport_lbtipc_↩ datagram_max_size (context)** • <**max-datagram**> for the DRO's Peer portal.

10.2 Assertions

UM produces assertions for conditions that are not expected to occur. They are not error conditions and indicate extenuating conditions that we don't handle or don't expect.

10.2.1 Fatal Assertions

Fatal assertions appear for conditions that are not expected to occur and therefore require a shutdown.

`Contact Informatica Support`.

10.2.2 Non-fatal Assertions

Non-fatal assertions occur for unexpected conditions but do not require shutdown. Normal operation may continue.

`Contact Informatica Support`.

10.3 Message Loss

UM can recover message loss automatically but any recurring loss situation should be investigated and resolved.

Symptom

The receiving application monitoring statistic, lost, reports the number of datagrams detected as lost.

In addition, NAKing activity also indicates message loss, however, you could turn NAKing off. (If you are concerned about message loss, however, you should not turn it off.) Your source application monitoring statistics show values for **naks_rcved** or **nak_pckets_rcved**. Receiving application monitoring statistics show values for **naks_sent** or **nak_pckets_sent**.

Cause

Message loss in source-paced transports (LBT-RM, LBT-RU) can occur due to the following.

- Slow or overloaded receiver applications drop packets because, for example, the CPU can't service network interrupts or UDP socket buffers.
- An overloaded network infrastructure drops packets because of, for example, switch buffer overflows or NIC ring buffer overflows.
- A network component fails.

The following diagram depicts possible locations of message loss.

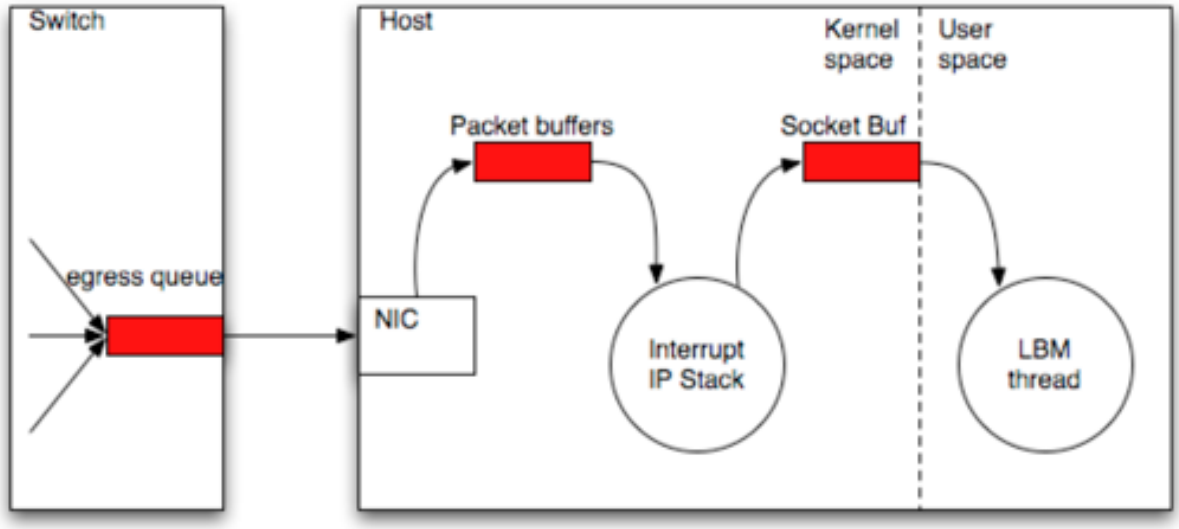

Resolution

Select the appropriate command from the table below to diagnose UDP socket buffer or NIC ring buffer loss.

Platform	Buffer	Command	Result
Linux	UDP socket buffer	netstat -s	Look for the UDP field, packet receive errors
Linux	NIC ring buffer	ifconfig eth0	Look for RX packets ... overruns
Windows (7 and beyond)	UDP socket buffer	netstat -s	Look for the UDP field, packet receive errors
Solaris	UDP socket buffer	kstat | grep udpInOverflows	Look for the UDP field, packet receive errors
Solaris	NIC ring buffer	kstat -n bge0 | grep norcvbuf	Look for RX packets ... overruns
Network component	—	Refer to the components documentation.	—

Use the following table if you find loss with any of the above actions.

If you find loss in	And the loss	Resolution
UDP socket buffer	occurs in small bursts	Increase the UDP buffer size.
UDP socket buffer	Is constant	Escalate the issue to your UM development team.
NIC ring buffer	—	Maximize the NIC's receive descriptors. If this doesn't reduce the loss, escalate the issue to your UM development team.
A network component	—	Escalate the issue to your network team or UM development team.

If you do not find loss in any buffers or network components, `contact Informatica Support`.

Note: Microsoft Windows prior to version 7 does not report buffer loss accurately. If you believe you are experiencing UDP socket buffer overflows, you can try increasing the UDP buffer size. If you believe you are experiencing NIC

ring buffer overflows, contact your NIC vendor for assistance.

10.4 Unrecoverable Loss

Unrecoverable message loss refers to messages that have not been delivered and are not available for retransmission.

Symptom	Cause	Resolution
Monitoring statistics, unrecovered_txw > zero	Unrecovered messages have been removed from the source's transmission and cannot be retransmitted.	Identify the source of the loss using Message Loss. -or- Contact Informatica Support.
Monitoring statistics, unrecovered_tmo > zero	Identify the source of the loss using Message Loss. -or- Contact Informatica Support.	
Unrecovered messages that were not recovered before the NAK generation interval expired.	Application log messages: LBM_↩MSG_UNRECOVERABLE_LOSS or LBM_MSG_UNRECOVERAB↩LE_LOSS_BURST	Identify the source of the loss using Message Loss. -or- Contact Informatica Support.

Either of the two causes mentioned above for unrecovered_txw or unrecovered_tmo.

See also LBT-RM reports unrecoverable loss. What should I do?

10.5 High Latency

High latency can appear as latency spikes or just slow recovery processes such as Late Join.

Symptom	Cause	Resolution
Latency spikes	Two most common causes: • Misconfigured implicit batching settings. • Message Loss	1. Check implicit batching settings. If you desire the lowest latency at all times - which can bring a penalty of higher CPU utilization and increased probability for receivers to experience UDP buffer overflows - set implicit_batching↩ _minimum_lengthh to 1. The same effect can be achieved by using the LBM_MSG_FLUSH flag inside the **lbm_src_send()** call. 2. Check for loss in receiver statistics. If loss is occurring, refer to "Message Loss" on page 68. If these scenarios are not the problem, contact Informatica Support.
Slow Late Join operation	—	Contact Informatica Support

10.6 Deaf Receivers

Receiver **deafness** is a general term that means a subscriber is not getting messages, even though the publisher is sending messages. Awareness of this condition can come from many sources, such as business people complaining that they are not receiving expected data or from your own monitoring of statistics, application logs or the liveness of processes.

Use the following table to help detect topic or receiver deafness.

Symptom	Cause	Resolution
All transport monitoring statistics stop "ticking".	When statistics for the affected transports stop increasing, it indicates an application has stopped publishing data for some reason. As a result the receivers of that data will go deaf.	Restart the sending applications or contact Informatica Support
LBT-RM or LBT-RU source monitoring statistics, msgs_sent and bytes_sent stop increasing	Indicates a source or sources has gone off-line, resulting in receiver deafness.	Restart the sending applications or contact Informatica Support
LBT-RM or LBT-RU receiver monitoring statistics, msgs_rcvd and bytes_rcvd stop increasing	Indicates a receiver or receivers have gone off-line.	Restart the receiving applications or contact Informatica Support

Symptom	Cause	Resolution
LBT-RU or TCP source monitoring statistics, num_clients change in unusual ways.	LBT-RU and TCP sources are able to track the number of connected clients. Unusual changes to the number of connected LBT-RU or TCP clients can indicate a problem. For example, clients dropping off during trading hours, or rapid changes in the number of clients.	Restart the sending and/or receiving applications or contact Informatica Support
End of Session (EOS) messages appear in applications logs.	When activity intervals expire, UM issues EOS messages to receiving applications. These appear in the application logs.	Restart the receiving applications or contact Informatica Support
The lbmrd Process ID (PID) disappears on either a sending or receiving machine(s).	Topic resolution has stopped. May not result in immediate topic deafness if topic resolution has already been completed, but may result in deafness if a new source or receiver comes up.	If the receiving context's monitoring statistic tr_rcv_unresolved_topics is zero, all topics are resolved and this may not be a problem. Either restart the receiving applications or contact Informatica Support

Deaf Receivers with the UM Gateway

After a receiver-side gateway is shutdown and restarted, receivers will be deaf to any forwarded traffic until EOS is triggered.

Deaf Wildcard Receivers

Symptom	Cause	Resolution
Wildcard receivers are not receiving messages.	—	• Be sure the **resolver_cache (context)** is enabled (set to 1, which is the default. • Be sure wildcard queries are enabled by setting **resolver_query_minimum_interval (wildcard_receiver)** is set to the default of 50 ms.

10.7 Persistent Sending Problems

UM sources sending from a persistence application can encounter problems with flight size or the persistent store.

10.7.1 Flight Size

A blocked source due to flight size limitations is not a visible problem unless the operator can see all data flows through the system.

Symptom	Cause	Resolution
Monitoring statistics show a lower level of activity for a Persistence application than expected.	Source not sending because it is blocked by flight size	• Increase flight size by increasing the allowable number of messages in flight with the configuration option, **ume_flight_size (source)**. • Slow down sources. • Contact Informatica Support

10.7.2 Persistent Store Connectivity

Symptom	Cause	Resolution
Store log contains message, LBM_↩ SRC_EVENT_UME_STORE_ UNR↩ ESPONSIVE	Unresponsive store	The receiver can track the inability to complete registration by correlating the receipt of a new source notification with a LBM_MSG_UME_REG↩ ISTRATION_COMPLETE_EX event. The new source notification is defined by the option receiver **resolver_↩ source_notification_function (context)**. A timer should be set to log a message or trigger an alarm if the completion message is not received after multiple seconds. To match the source in the callback to the completion event, a string comparison should be used on the lbm_msg->source field. The timer for each source should be canceled when its registration complete event is received.
The source can detect a loss of quorum by checking the error string passed in for the event LBM_SRC_↩ EVENT_UME_STORE_UNRESPO↩ NSIVE. The string will contain "(quorum lost)".	Lost quorum (EUMENOREG)	Restart the affected persistent Stores.

Chapter 11

Contacting Informatica Support

You cannot open a ticket by sending email to "support@informatica.com".

For policies, procedures, and tips related to Ultra Messaging Technical Support, see UM Support.

Chapter 12

UM Log Messages

Note that the UMDS product's messages have been removed from this document. See the *UMDS User Guide* for UMDS-specific log messages.

12.1 UM Core Messages

Core-10055-131: could not allocate lu bytes [s:d]	The system was not able to allocate the amount of memory requested.	If the amount requested was particularly large, the problem may be a misconfiguration; however if the amount requested was relatively small, the physical memory on the machine may be over committed; try moving some applications to another machine.
Core-10055-2986: INFO: Smart Source "%s" Late Join not set, but UME store specified. Setting Late Join.	Late Join must be enabled with UME stores. Late Join will be automatically enabled if not set.	To prevent this message set Late Join.
Core-10055-2991: INFO: Smart Source "%s" specified ume_retention_size_limit; ignoring option.	Smart Sources preallocate all buffers so no buffer limit control is required.	To prevent this message do not specify ume_retention_size_limit.
Core-10055-2992: INFO: Smart Source "%s" specified retransmit_retention_size_limit; ignoring option.	Smart Sources preallocate all buffers so no buffer limit control is required.	To prevent this message do not specify retransmit_retention_size_limit.
Core-10055-2993: INFO: Smart Source "%s" specified ume_retention_size_threshold; ignoring option.	Smart Sources preallocate all buffers so no buffer release control is required.	To prevent this message do not specify ume_retention_size_threshold.
Core-10055-2994: INFO: Smart Source "%s" specified retransmit_retention_size_threshold; ignoring option.	Smart Sources preallocate all buffers so no buffer release control is required.	To prevent this message do not specify retransmit_retention_size_threshold.
Core-10055-2995: INFO: Smart Source "%s" specified ume_sri_flush_sri_request_response; ignoring option.	Smart Sources do not use the implicit batch buffer so no SRI record control is required.	To prevent this message do not specify ume_sri_flush_sri_request_response.

Core-10055-2996: INFO: Smart Source "%s" specified ume_sri_↩ immediate_sri_request_response; ignoring option.	Smart Sources do not allow control over how quickly a source responds to a receiver's request for an SRI record.	To prevent this message do not specify ume_sri_immediate_sri_↩ request_response.
Core-10055-2997: INFO: Smart Source "%s" specified ume_sri↩ _request_response_latency; ignoring option.	Smart Sources do not allow control over how long a source waits before sending an SRI packet in response to a request from a receiver.	To prevent this message do not specify ume_sri_request_↩ response_latency.
Core-10055-2998: INFO: Smart Source "%s" specified retransmit↩ _retention_age_threshold; ignoring option.	Smart Sources do not allow the user to set the retransmit retention age threshold.	To prevent this message do not specify the retransmit_retention_↩ age_threshold.
Core-10055-3038: inflight went negative - resetting to 0	A call to decrement the number of inflight messages found the value to be negative.	Nothing, it is forcibly set to 0 in this case.
Core-10055-3170: WARNING: received ACK with out-of-bounds StoreID u/u	A UMP Source received an acknowledgment packet with a store that is not within the range of Store IDs.	This should not happen and is not a serious condition.
Core-10055-3171: WARNING: received ACK from non-active store u	UMP received ACK from non-active store.	This is not a serious condition unless it happens frequently and messaging is affected
Core-10055-3172: WARNING↩ : received stability sACK without StoreID set	UMP received stability ACK or N↩ ACK without StoreID set.	This is not a serious condition unless it happens frequently and messaging is affected.
Core-10055-3175: smart source "%s" received ACK with unknown type x	The smart source received an ACK with an unknown type.	This is not a serious condition unless it happens frequently and messaging is affected.
Core-10055-666: inflight bytes would be negative, resetting to 0	A call to decrement the number of inflight bytes would set it to be negative.	Nothing, it is forcibly set to 0 in this case.
Core-10138-100: unable to schedule EOF handling timer: s	EOFs are handled asyncronously via a scheduled timer. An error occurred while trying to schedule this timer. The internals of UM will continue to operate as though the transport in question still exists.	
Core-10138-110: can not send unicast immediate messages to transport threads. Source s:u.	Transport threads are not equipped to receive unicast immediate messages.	Stop sending unicast immediate messages to transport threads' request ports.
Core-10138-51: xsp returned from transport mapping callback was created on a different context - choosing default	When an xsp object is created, a user created context is passed in. The returned xsp can only be used with that context.	
Core-10160-5564: INFO: Smart Source "%s" set transport_lbtru_↩ use_session_id to 0; setting back to 1 as only allowed value.	Smart Sources do not allow the user to clear the use session ID attribute.	To prevent this message do not set transport_lbtru_use_session↩ _id to 0.
Core-10162-10: LBMC CNTL S↩ SF ULB creq header size incorrect. Dropping. Origin: s:d.	The Source Side Filtering U↩ LB Connection Request message header contains an incorrect size.	Check the source (IP:Port) for possible version mismatch or service attack.

Core-10162-1: Source Side Filtering ULB request from [s] but this receiver does not have ordered_↩ delivery configured to -1 so source side filtering will not be enabled and this receiver will get all messages.	The user configured "transport_↩ source_side_filtering_behavior ulb" but the receiver did not configure "ordered_delivery -1" so source side filtering can't be done.	Source Side Filtering of ULB is only valid between ULB sources and ULB receivers who have ordered↩ _delivery configured to -1.
Core-10162-2: Source Side Filtering ULB request from [s] but response port set to zero. No source side filtering from this source so this receiver will get all messages.	The receiver is registering Source Side Filtering interest but the source response port is zero. The interest will not arrive at the source and therefore this receiver will get all messages.	This occurs when the source disables binding of the request port. See request_tcp_bind_request_↩ port configuration option.
Core-10164-1: LBMR Topic Resolution Remote Domain Route packet malformed (contains Domain ID 0). Dropping. Origin: s:d	LBMR Data received contain invalid data.	Check the source (IP:Port) for possible version mismatch or service attack.
Core-10178-1: lbm_timer_expire↩ : Exceeded d timer expirations in one iteration	UM encountered a condition where the specified number of timers were expiring at the same time. This is undesirable and indicates a CPU burst usage. To prevent starvation of network processing, some timers are deferred for processing and network processing is resumed. All timers are eventually processed with a minor delay - this is acceptable behaviour. If this message occurs frequently, contact Informatica support for further guidance.	Examine the configuration of this process to determine if there are timers likely to coincide in their expirations or if there are many sources created very quickly. If there are, it is suggested that the timers or source creation are staggered.
Core-10190-1: unable to schedule duplicate regids check timer: s	When new UMP delivery controllers are created, UM checks other UMP delivery controllers for duplicates. This is handled asyncronously via a scheduled timer. An error occurred while trying to schedule this timer.	
Core-10190-6: ume_proactive_↩ keepalive_interval can't be 0 for X↩ SP context. Setting to default d.	Proactive keepalive in XSP context can not be disabled. ume↩ _proactive_keepalive_interval was set to the default value.	Set the receiver's ume_proactive↩ _keepalive_interval to a non zero value that is less than the store's keepalive-interval.
Core-10190-7: unable to schedule preg response handling timer: s	Preg Response in the receiver is handled asyncronously via a scheduled timer. An error occurred while trying to schedule this timer.	
Core-10327-10: WARNING↩ : Topic [s] joining session [s] which exists and uses a different transport_lbtru_send_naks [d] than requested [d].	After a receiver has created a transport session, a subsequent receiver joining the same transport session cannot configure a different transport_lbtru_send_naks setting.	
Core-10383-1: WARNING↩ : multiple_receive_maximum↩ _datagrams config could not be implemented due to buffer allocation failure	The multiple_receive_maximum↩ _datagrams configuration option could not be implemented, because a buffer could not be allocated	The physical memory on the machine may be over committed; try moving some applications to another machine.

Core-10383-2: WARNING↩ : multiple_receive_maximum_↩ datagrams or transport_lbtrm_↩ source_timestamp specified but recvmmsg is NOT supported	The multiple_receive_maximum↩ _datagrams configuration option could not be implemented, because recvmmsg is NOT supported	The recvmmsg() is available as of Linux 2.6.32 and glibc 2.12.
Core-10383-3: WARNING: Turning off multiple_receive_maximum↩ _datagrams and/or transport↩ _lbtrm_source_timestamp functionality for socket because OS returned ENOSYS for recvmmsg()	The multiple_receive_maximum_↩ datagrams configuration option will not be used for this socket because recvmmsg is NOT supported	The OS returned ENOSYS after calling recvmmsg() which indicates that the functionality is not implemented
Core-10383-4: WARNING↩ : recvmmsg OS error	An error occurred using the recvmmsg() functionality (enabled by setting the multiple↩ _receive_maximum_datagrams configuration) to retrieve data.	Please use the operating system's error code and description to further understand the circumstances of the error
Core-10403-01: SRS Controller Connection (p) is unable to request a stream of data from the Server (s:u)	SRS Controller is unable to request a data stream from the server.	Make sure the server is running.
Core-10403-02: SRS Controller Connection (p) received an invalid message from the SRS Server; dropping (s:u)	Received an invalid message payload from the Server.	Check to make sure the correct server is running and the correct port is configured.
Core-10403-04: SRS Controller (p) SID (0xx) for ContextID (u) is unable to connect to any configured Server	The SRS Controller is unable to connect to any configured Server.	Check to make sure the server is running and the correct port is configured.
Core-10403-05: SRS Controller Connection (p) SID (0xx) is unable to send the initial registration request to the Server (s:u) Local Addr (s:u)	The SRS Controller is unable to send the initial connection request to the Server.	Check to make sure the correct server is running and the correct port is configured.
Core-10403-06: SRS Controller Connection (p) is unable to send data to the Server (s:u)	SRS Controller is unable to send data to the server.	Make sure the server is running.
Core-10403-07: SRS Controller (p) is unable to stop the communications thread	SRS Controller got an error trying to stop the communications thread upon shutdown.	Make sure the server is running.
Core-10403-08: SRS Controller Connection (p) SID (0xx) received the initial connection from the Server (s:u) Local Addr (s:u) for ContextID (u)	The SRS Controller got a connection from the Server.	This is informational only and no action is required.
Core-10403-09: SRS Controller Connection (p) is unable to request more data on the stream from the Server (s:u)	SRS Controller is unable to request more data on the data stream from the server.	Make sure the server is running.
Core-10403-120: resolver_service entry (s:u) already exist. Skipping but continuing.	The lbm_context_attr_setopt/str↩ _setopt() detected duplicate resolver_service entries. The duplicate entries will be skipped.	Check the config file or code (if config set via code) for duplicate resolver_service entries. Also check if **lbm_config()** is loaded multiple times with the same resolver_service entries

Core-10403-150: Context (p) created with ContextID (u) and ContextName [s]	A Context was created with the given Context ID and name.	This is informational only and no action is required.
Core-10403-151: Reactor Only Context (p) created with ContextID (u) and ContextName [s]	A Reactor Only Context was created with the given Context ID and name.	This is informational only and no action is required.
Core-10403-200: LBM SRS CTLR (p) received a log msg from RSock library (Level d: s)	SRS Controller got a log message from the RSock library.	Check the RSock message for more information.
Core-10403-20: SRS Controller (p) could not format source string on source create; src(s) error(s)	SRS Controller got an error when formating the source string on a source create	Refer to the error message included at the end of this message.
Core-10403-21: SRS Controller Connection (p) could not parse the source string from the Server (s:u). Source(s) Error(s)	SRS Controller got an error trying parse the source string from the server.	Make sure the server is running and is the correct version. Also make sure no other processes are sending messages on this IP:Port.
Core-10403-22: SRS Controller Connection (p) received a suspicious topic (s) from the Server (s↩ :u).	SRS Controller got a suspicious topic from the server.	Make sure the server is running and is the correct version. Also make sure no other processes are sending messages on this IP:Port.
Core-10403-23: SRS Controller Connection (p) received a suspicious source (s) from the Server (s:u).	SRS Controller got a suspicious source from the server.	Make sure the server is running and is the correct version. Also make sure no other processes are sending messages on this IP:Port.
Core-10403-24: SRS Controller Connection (p) could not parse the data from the Server (s:u).	SRS Controller could not parse the data from the server.	Make sure the server is running and is the correct version. Also make sure no other processes are sending messages on this IP:Port.
Core-10403-25: SRS Controller Connection (p) received an invalid Message ID (d) from the Server (s:u).	SRS Controller received an invalid Message ID from the server.	Make sure the server is running and is the correct version. Also make sure no other processes are sending messages on this IP:Port.
Core-10403-31: SRS Controller Connection (p) could not parse the registration response message from the Server (s:u).	SRS Controller could not parse the registration response message from the server.	Make sure the server is running and is the correct version. Also make sure no other processes are sending messages on this IP:Port.
Core-10403-32: Domain ID (d) from SRS (p) is different from existing Domain ID (d)	The SRS delivered a Domain ID that does not match the existing (known) Domain ID.	A Domain ID configuration mismatch has been detected and needs to be repaired.
Core-10403-34: Domain ID discovered via SRS Controller (p); context resides in Domain ID u.	Log message indicates a Domain ID discovery.	This is not an error.
Core-10483-1: WARNING↩ : UMP receiver Low sequence number[0xx] is greater than the High sequence number [0xx] + 1. Setting to high + 1. Receiver will join the live stream and no messages will be recovered.	The receiver's low sequence number is larger than the high sequence number + 1. This indicates a persisted receiver state which is out of sequence and this can occur on rare occasions; for example, when the umestored persistent files are wiped in a staggered sequence or when the application had explicitly acknowledged a higher sequence than it received.	To prevent deafness, the low sequence number will be set to the high sequence number + 1. If possible, Applications should audit for missing messages and perform any recovery actions needed
Core-10489-10: lbm_winevlog_↩ setup(): Unable to Register Event Source: s	Windows error registering event source	Contact Informatica Support.

Core-10489-1: <s> is an invalid value for Windows event log level. Defaulting to WARN	The value for the LBM service windows event log level was not recognized. The default WARN was assigned.	Valid values are ERROR, WARN, INFO and NONE. Please specify one of the valid values.
Core-10489-4: lbm_winevlog_↩setup() CreateThread error: s	Unable to create Windows Thread.	Contact Informatica Support.
Core-10489-5: lbm_winevlog_↩setup() CreateMutex error: s	Unable to create Windows mutex	Contact Informatica Support.
Core-10489-6: lbm_winevlog_↩setup() error creating TL queue: s	Unable to create two-lock queue	Contact Informatica Support.
Core-10528-3: The smart source p will fragment messages when the send message length plus configured message headers [d bytes] exceeds the transport's maximum datagram size [d bytes]	The configured smart_src_max_↩message_length plus LBM and application specified message headers exceeded the transport's datagram maximum size.	The smart source will fragment messages when the send message length plus headers exceeds the transport's maximum message length.
Core-10552-1: INFO: SRI request count exceeded maximum attempts. Retrying.	Exceeded the maximum number of requests for a Store Record Information (SRI).	Typically resolves itself after a store restart completes. Increase ume↩_sri_request_maximum and ume↩_sri_request_interval configuration option to reduce log message frequency
Core-10654-02: SRS Controller Connection (p) SID (0xx) got a disconnect from the Server (s:u) Local Addr (s:u)	The SRS Controller got a disconnect from the Server.	Check to make sure the correct server is running and the correct port is configured.
Core-10654-1: unicast resolver s↩:u went inactive after having previously been active	The process received no communications from the LBMRD at the specified ip:port within the resolver_unicast_activity_timeout and is marked as inactive after previously being active.	If the LBMRD is running properly, increasing the resolver_unicast_↩activity_timeout to account for possible network congestion or an overloaded LBMRD can resolve this issue.
Core-10668-01: The context application_data configuration option is deprecated and may have no effect in the future.	The application_data configuration option is deprecated.	Using this configuration option is not recommended.
Core-10668-02: The source application_data configuration option is deprecated and may have no effect in the future.	The application_data configuration option is deprecated.	Using this configuration option is not recommended.
Core-10668-03: The receiver application_data configuration option is deprecated and may have no effect in the future.	The application_data configuration option is deprecated.	Using this configuration option is not recommended.
Core-10668-04: The wildcard_↩receiver application_data configuration option is deprecated and may have no effect in the future.	The application_data configuration option is deprecated.	Using this configuration option is not recommended.
Core-10668-05: The event_queue application_data configuration option is deprecated and may have no effect in the future.	The application_data configuration option is deprecated.	Using this configuration option is not recommended.
Core-10668-06: The hfx application_data configuration option is deprecated and may have no effect in the future.	The application_data configuration option is deprecated.	Using this configuration option is not recommended.

Core-10686-1: problem detected in config file: s at line d (s) error is s	An error was detected while processing a line in the configuration file.	UM executes a case insensitive comparison for an exact match of configuration options. Check for correct spelling and proper use of underscore characters.
Core-10686-2: problem detected in config file: s at line d (s) error is s	An error was detected while processing a line in the configuration file.	UM executes a case insensitive comparison for an exact match of configuration options. Check for correct spelling and proper use of underscore characters.
Core-10686-3: problem detected in config file: s at line d (s) error is s	An error was detected while processing a line in the configuration file.	UM executes a case insensitive comparison for an exact match of configuration options. Check for correct spelling and proper use of underscore characters.
Core-10720-1: SRS Controller (p) node(p) is in inconsistent state for topic(s) with domain_id(d).	SRS Controller receiver info record and receiver delete record are in an inconsistent state	Contact Informatica support.
Core-10720-2: SRS Controller Connection (p) received a suspicious topic (s) with domain_id(d) from the Server (s:u).	SRS Controller got a suspicious topic from the server.	Make sure the server is running and is the correct version. Also make sure no other processes are sending messages on this IP:Port.
Core-10720-3: SRS Controller Connection (p) received a suspicious topic (s) domain_id(d) from the Server (s:u).	SRS Controller got a suspicious topic from the server.	Make sure the server is running and is the correct version. Also make sure no other processes are sending messages on this IP:Port.
Core-10720-4: SRS Controller (p) node(p) is in inconsistent state for topic(s) with OTID[s].	SRS Controller Source info and Source delete record are in an inconsistent state	Contact Informatica support.
Core-10720-5: SRS Controller Connection (p) received a suspicious receiver info message from the Server (s:u).	SRS Controller Should only receive receiver info message for tnwgd.	Reach out to informatica customer support
Core-10720-6: SRS Controller Connection (p) received a suspicious receiver end message from the Server (s:u).	SRS Controller Should only receive receiver end message for tnwgd.	Reach out to informatica customer support
Core-10722-1: SRS Controller (p) node(p) is in inconsistent state for pattern(s) with domain_id(d).	SRS Controller pattern info record and pattern delete record are in an inconsistent state	Contact Informatica support.
Core-10722-2: SRS Controller Connection (p) received a suspicious pattern info message from the Server (s:u).	SRS Controller Should only receive pattern info message for tnwgd.	Reach out to informatica customer support
Core-10722-3: SRS Controller Connection (p) received a suspicious pattern (s) with domain_id(d) from the Server (s:u).	SRS Controller got a suspicious pattern from the server.	Make sure the server is running and is the correct version. Also make sure no other processes are sending messages on this IP:Port.
Core-10722-4: SRS Controller Connection (p) received a suspicious pattern end message from the Server (s:u).	SRS Controller Should only receive pattern end message for tnwgd.	Reach out to informatica customer support
Core-10722-5: SRS Controller Connection (p) received a suspicious pattern(s) domain_id(d) from the Server (s:u).	SRS Controller got a suspicious pattern from the server.	Make sure the server is running and is the correct version. Also make sure no other processes are sending messages on this IP:Port.

Core-10779-01: SRS Controller (p) does not support d Resolver Service hosts configured: changing to d	More than the maximum number of Resolver Service hosts has been configured. Limiting to the maximum allowed.	Check and repair configuration settings.
Core-10779-02: SRS Controller Connection (p) SID (0xx) is unable to initiate connection to the Server (s:u) Local Addr (s:u)	The SRS Controller is unable to initiate the initial connection request to the Server.	Check to make sure the correct server is running and the correct port is configured.
Core-10781-1: unable to schedule interest update handling timer: ctx[p] s	Interest update is handled asyncronously via a scheduled timer. An error occurred while trying to schedule this timer.	Please contact Informatica support.
Core-10794-1: epoll_ctl s error: (d) OP (d) FD (d) events (0xx) message (s)	The fd_management_type is set to epoll and file descriptor registration returned an error.	Check error returned and contact Informatica support if this warning occurs frequently.
Core-10824-1: malformed Application Header, dropping application data.	LBM received a message with applications headers but there was not enough data to support application headers.	This packet is suspicious.
Core-10824-2: malformed Application Header, dropping application data. (s:u)	LBM received a message with applications headers but there was not enough data to support application headers.	This packet is suspicious. Please check the source of the data.
Core-10960-01: SRS Remote Domain Route packet malformed (contains Domain ID 0). Dropping. Origin: s:u Route: s:u	SRS Data received contains invalid Domain ID.	Check the source (IP:Port) for possible version mismatch or service attack.
Core-10960-02: SRS Remote Domain Route End packet malformed (contains Domain ID 0). Dropping. Origin: s:u Route: s:u	SRS Data received contains invalid Domain ID.	Check the source (IP:Port) for possible version mismatch or service attack.
Core-10960-100: unable to schedule interest update handling timer: ctx[p] s	Route info is handled asyncronously via a scheduled timer. An error occurred while trying to schedule this timer.	Please contact Informatica support.
Core-10960-200: Duplicate context name 's' detected. Origin↩ : DomainID u addr s:d	A named context has detected another context advertising the same name via the SRS.	Advertised context names (E.↩ g. store names) must be unique across topic resolution domains. Check the configuration to ensure only one store or named context with a given name is operational at any given time. The UM DomainID, IP address, and port of the advertised duplicate context name are given.
Core-10960-201: Error processing SRS Context Name flags x. Ignoring. Origin: s:d	An SRS Context Name packet was ignored because it could not be parsed, or the application failed to allocate memory.	Investigate the listed IP and port for an application generating spurious traffic.
Core-10995-113: [LBMMON] Format module Store deserialize function returned d, s	A store statistics message was unable to be parsed.	Contact Informatica support.
Core-10995-115: [LBMMON] Failed to retrieve umestore stats, error d, s	LBMMON failed to retrieve stats from a store for reporting.	Contact Informatica support.

Core-10995-116: [LBMMON] Error d returned from transport module send function, s	Failed to send a store statistics packet.	Contact Informatica support.
Core-10995-117: s	Failed to send a store statistics packet due to size limitation.	Specify store filter and/or select options to reduce the size/scope of the statistics message and try again.
Core-10995-123: [LBMMON] Format module Gateway deserialize function returned d, s	A gateway statistics message was unable to be parsed.	Contact Informatica support.
Core-10995-125: [LBMMON] Failed to retrieve gateway stats, error d, s	LBMMON failed to retrieve stats from a gateway for reporting.	Contact Informatica support.
Core-10995-126: [LBMMON] Error d returned from transport module send function, s	Failed to send a gateway statistics packet.	Contact Informatica support.
Core-10995-127: [LBMMON] Error d returned from format module gateway serialize function, s	Failed to format a gateway statistics packet.	Contact Informatica support.
Core-10995-128: [LBMMON] Failed to free memory used for gateway stats, error d, s	LBMMON failed to free memory used for gateway stats.	Contact Informatica support.
Core-10995-140: [LBMMON] Topic[s] Source[s], Beginning of Transport Session	LBMMON has received a Beginning of Transport Session message.	This message for informational purposes only and can be ignored.
Core-10995-141: [LBMMON] Topic[s] Source[s], End of Transport Session	LBMMON has received a Beginning of Transport Session message.	This message for informational purposes only and can be ignored.
Core-10995-142: [LBMMON] Topic[s] Source[s] Unrecoverable Loss at SQN[u]	A message was declared unrecoverably lost by LBMMON's receiver's underlying delivery controller.	Identify the source of the loss or Contact Informatica Support.
Core-10995-143: [LBMMON] Topic[s] Source[s] Unrecoverable Loss Burst at SQN[u]	A burst of messages were declared unrecoverably lost by LBMMON's receiver's underlying delivery controller.	Identify the source of the loss or Contact Informatica Support.
Core-10995-27: [LBMMON] Error d returned from format module source serialize function, s	Failed to convert a CSV source transport statistics packet to PB format.	Contact Informatica support.
Core-10995-28: [LBMMON] Error d returned from format module receiver serialize function, s	Failed to convert a CSV receiver transport statistics packet to PB format.	Contact Informatica support.
Core-10995-29: [LBMMON] Error d returned from format module event queue serialize function, s	Failed to convert a CSV event queue statistics message to PB format.	Contact Informatica support.
Core-10995-30: [LBMMON] Error d returned from format module context serialize function, s	Failed to convert a CSV context statistics message to PB format.	Contact Informatica support.
Core-10995-31: [LBMMON] Error d returned from format module receiver topic serialize function, s	Failed to convert a CSV receiver topic statistics message to PB format.	Contact Informatica support.
Core-10995-321: [LBMMON] Immediate messaging target: s	A request port was opened with the IP address and port specified.	This is informational only and no action is required.
Core-10995-32: [LBMMON] Error d returned from format module wildcard receiver serialize function, s	Failed to convert a CSV wildcard receiver statistics message to PB format.	Contact Informatica support.

Core-10995-413: [LBMMON] An SRS statistics message was received but LBMMON_RCTL_PA↩ SSTHROUGH_CALLBACK not defined. SRS statistics require passthrough.	An SRS statistics message was received but LBMMON_RCTL_PA↩ SSTHROUGH_CALLBACK not defined.	Set option LBMMON_RCTL_PA↩ SSTHROUGH_CALLBACK in the LBMMON receiver controller.
Core-10995-432: [LBMMON] Invalid control message: s	An invalid LBMMON control message was received.	Contact Informatica support.
Core-11087-1: ume_flight_size set to greater than 1,000,000 (d). This may result in delays creating internal structures.	The value of ume_flight_size has been set to greater than 1,000,000. This may cause large source create times initializing internal structures.	The ume_flight_size value is rather large. A smaller flight size is recommended.
Core-11087-2: ume_flight_size set to greater than 1,000,000 (d). This may result in delays creating internal structures.	The value of ume_flight_size has been set to greater than 1,000,000. This may cause large source create times initializing internal structures.	The ume_flight_size value is rather large. A smaller flight size is recommended.
Core-11187-1: Error parsing line d attribute name 's' - ignoring.	The default-value attribute for this option was invalid for this platform.	If the XML config is being used for different versions of UM and/or different platforms, and the default-value is valid on other installations of UM, then this message may be ignored. Otherwise, check your configuration for invalid default-value.
Core-11187-2: Default value 's' invalid: s.	The LBM error message and message number associated with Core-11187-1.	Refer to the error message number to help correct the problem.
Core-11416-3: NAK cutoff - disabling sending NAKs	A call was made to set the NAK cutoff switch to disable sending naks	Nothing needs to be done, this is an informational message
Core-11416-4: NAK cutoff - enabling sending NAKs	A call was made to set the NAK cutoff switch to enable sending naks	Nothing needs to be done, this is an informational message
Core-11416-5: Invalid flags value x	A call was made to set the NAK cutoff switch with an invalid flags value	See the API guide for correct values
Core-3398-1: Socket close timed out before receive buffer drain complete. lu bytes discarded from source (s).	Socket close timedout, but receive buffer has not been drained fully yet. On this close socket you may see connection resets.	
Core-3398-2: Error received while calling wincompport_recv (s) from source (s)	The Windows completion port call to recv returned an error.	Look up the WSA error and take appropriate action.
Core-5402-1: Hot-failover receiver ignoring mismatched sequence number size	A hot failover receiver dropped a message that had a sequence number size different than what it was expecting.	Ensure that all hot failover sources on the same topic are sending using the same sequence number size
Core-5455-1: epoll_ctl: EPOLL_↩ CTL_DEL returned: errno:d:s	If errno is EBADF or ENOENT, File descriptor is closed before lbm_↩ cancel_fd call	
Core-5455-2: lbm_fd_cancel epoll_ctl: epoll_op: d returned errno:d:s	If errno is EBADF or ENOENT, file desc is closed before lbm_cancel↩ _fd_call	

Core-5480-1: OTR Initiated for [s][s]	OTR has been initiated either for the first time on this source, or it has been at least a log_alert_↩ cooldown's length of time since the last log alert.	
Core-5480-2: OTR Repeated for [s][s] (u times)	OTR has been ongoing for this source.	
Core-5480-3: no response received to late join initiation request - skipping late join	The receiver was unable to get a response from a source claiming to provide late join.	Contact Informatica support.
Core-5480-45: message delivery failed: persrc ctlr p perrcv ctlr p sqn x	Internal error attempting to process recovered data.	Contact Informatica support
Core-5480-46: rxr ctlr p request failed recovering sqns x - x from perrcv ctlr p	Internal error attempting to initiate recovery of data.	Contact Informatica support.
Core-5480-47: mtt register failed↩ : (u) [s]	Internal error while attempting to process a command on an mtt transport thread.	Contact Informatica support.
Core-5554-2: rsp_ctl received unknown message from peer s:d with info flags=[x,x]	A TCP peer received an unknown control message.	Refer to the peer's IP:Port for the source of the control message.
Core-5626-1: s: Option s is not recognized - ignoring.	The option name was not recognized.	If the XML config is being used for different versions of UM, and the option is valid on versions of UM other than the current application, then this message may be ignored. Otherwise, check your configuration for invalid option names.
Core-5626-2: s: error parsing default value - ignoring.	The default-value attribute for this option was invalid for this platform.	If the XML config is being used for different versions of UM and/or different platforms, and the default-value is valid on other installations of UM, then this message may be ignored. Otherwise, check your configuration for invalid default-value.
Core-5626-3: s: error parsing default value 's': s	The default-value attribute for this option was not in the correct format.	Use the format appropriate for the specific option.
Core-5626-4: s: error parsing rule value - ignoring.	The rule value supplied was invalid for this platform.	If the XML config is being used for different versions of UM and/or different platforms, and the rule value is valid on other installations of UM, then this message may be ignored. Otherwise, check your configuration for invalid values.
Core-5626-5: s: error parsing rule value 's': s	The rule value was not in the correct format.	Use the format appropriate for the specific option.
Core-5626-6: s: error parsing rule value - ignoring.	The rule value supplied was invalid for this platform.	If the XML config is being used for different versions of UM and/or different platforms, and the rule value is valid on other installations of UM, then this message may be ignored. Otherwise, check your configuration for invalid values.

Core-5626-7: s: error parsing rule value 's': s	The rule value was not in the correct format.	Use the format appropriate for the specific option.
Core-5688-1279: WARNING: TCP session exists and uses a different transport_session_maximum_buffer [d] than requested [d].	Once a source has created a transport session a subsequent source joining the same transport session cannot configure a different transport_session_maximum_buffer setting. Please refer to UMS Objects section of the Design Concepts in the documentation.	
Core-5688-1280: WARNING: TCP session exists and uses a different transport_tcp_multiple_receiver_behavior [d] than requested [d].	Once a source has created a transport session a subsequent source joining the same transport session cannot configure a different transport_tcp_multiple_behavior setting. Please refer to UMS Objects section of the Design Concepts in the documentation.	
Core-5688-1281: WARNING: TCP session exists and uses a different transport_source_side_filtering_behavior [d] than requested [d].	Once a source has created a transport session a subsequent source joining the same transport session cannot configure a different transport_source_side_filtering_behavior setting. Please refer to UMS Objects section of the Design Concepts in the documentation.	
Core-5688-1284: WARNING: LBT-RM session for multicast address s exists and uses a different transport_lbtrm_tgsz [d] than requested [d].	Once a source has created a transport session a subsequent source joining the same transport session cannot configure a different transport_lbtrm_tgsz setting. Please refer to UMS Objects section of the Design Concepts in the documentation.	
Core-5688-1285: WARNING: LBT-RM session for multicast address s exists and uses a different transport_lbtrm_ignore_interval [d] than requested [d].	Once a source has created a transport session a subsequent source joining the same transport session cannot configure a different transport_lbtrm_ignore_interval setting. Please refer to UMS Objects section of the Design Concepts in the documentation.	
Core-5688-1286: WARNING: LBT-RM session for multicast address s exists and uses a different transport_lbtrm_sm_minimum_interval [d] than requested [d].	Once a source has created a transport session a subsequent source joining the same transport session cannot configure a different transport_lbtrm_sm_minimum_interval setting. Please refer to UMS Objects section of the Design Concepts in the documentation.	

Core-5688-1287: WARNING: LBT-RM session for multicast address s exists and uses a different transport_lbtrm_sm_maximum_interval [d] than requested [d].	Once a source has created a transport session a subsequent source joining the same transport session cannot configure a different transport_lbtrm_maximum_interval setting. Please refer to UMS Objects section of the Design Concepts in the documentation.	
Core-5688-1288: WARNING: LBT-RM session for multicast address s exists and uses a different transport_lbtrm_transmission_window_size [d] than requested [d].	Once a source has created a transport session a subsequent source joining the same transport session cannot configure a different transport_lbtrm_transmission_window_size setting. Please refer to UMS Objects section of the Design Concepts in the documentation.	
Core-5688-1289: WARNING: LBT-RM session for multicast address s exists and uses a different transport_lbtrm_transmission_window_size [d] than requested [d].	Once a source has created a transport session a subsequent source joining the same transport session cannot configure a different transport_lbtrm_transmission_window_size setting. Please refer to UMS Objects section of the Design Concepts in the documentation.	
Core-5688-1290: WARNING: LBT-RM session for multicast address s exists and uses a different transport_lbtrm_coalesce_threshold [d] than requested [d].	Once a source has created a transport session a subsequent source joining the same transport session cannot configure a different transport_lbtrm_coalesce_threshold setting. Please refer to UMS Objects section of the Design Concepts in the documentation.	
Core-5688-1291: WARNING: LBT-RU session exists and uses a different transport_lbtru_client_map_size [d] than requested [d].	Once a source has created a transport session a subsequent source joining the same transport session cannot configure a different transport_lbtru_client_map_size setting. Please refer to UMS Objects section of the Design Concepts in the documentation.	
Core-5688-1292: WARNING: LBT-RU session exists and uses a different transport_lbtru_transmission_window_size [d] than requested [d].	Once a source has created a transport session a subsequent source joining the same transport session cannot configure a different transport_lbtru_transmission_window_size setting. Please refer to UMS Objects section of the Design Concepts in the documentation.	

Core-5688-1293: WARNING: LBT-RU session exists and uses a different transport_lbtru_transmission↩ _window_limit [d] than requested [d].	Once a source has created a transport session a subsequent source joining the same transport session cannot configure a different transport_lbtru_transmission↩ _window_limit setting. Please refer to UMS Objects section of the Design Concepts in the documentation.	
Core-5688-1294: WARNING: LBT-RU session exists and uses a different transport_lbtru_ignore_interval [d] than requested [d].	Once a source has created a transport session a subsequent source joining the same transport session cannot configure a different transport_lbtru_ignore_interval setting. Please refer to UMS Objects section of the Design Concepts in the documentation.	
Core-5688-1295: WARNING: LBT-RU session exists and uses a different transport_lbtru_sm_minimum↩ _interval [d] than requested [d].	Once a source has created a transport session a subsequent source joining the same transport session cannot configure a different transport_lbtru_sm_minimum↩ _interval setting. Please refer to UMS Objects section of the Design Concepts in the documentation.	
Core-5688-1296: WARNING↩ : LBT-RU session exists and uses a different transport_lbtru↩ _sm_maximum_interval [d] than requested [d].	Once a source has created a transport session a subsequent source joining the same transport session cannot configure a different transport_lbtru_sm_maximum↩ _interval setting. Please refer to UMS Objects section of the Design Concepts in the documentation.	
Core-5688-1297: WARNING: LBT-RU session exists and uses a different transport_lbtru_client_activity↩ _timeout [d] than requested [d].	Once a source has created a transport session a subsequent source joining the same transport session cannot configure a different transport_lbtru_client_activity↩ _timeout setting. Please refer to UMS Objects section of the Design Concepts in the documentation.	
Core-5688-1298: WARNING: LBT-RU session exists and uses a different transport_lbtru_coalesce_↩ threshold [d] than requested [d].	Once a source has created a transport session a subsequent source joining the same transport session cannot configure a different transport_lbtru_coalesce_↩ threshold setting. Please refer to UMS Objects section of the Design Concepts in the documentation.	

Core-5688-1299: WARNING: LBT-RU session exists and uses a different transport_source_↩side_filtering_behavior [d] than requested [d].	Once a source has created a transport session a subsequent source joining the same transport session cannot configure a different transport_lbtru_source_side_↩filtering_behavior setting. Please refer to UMS Objects section of the Design Concepts in the documentation.	
Core-5688-1302: WARNING: LBT-IPC session exists and uses a different transport_lbtipc_sm_interval [d] than requested [d].	Once a source has created a transport session a subsequent source joining the same transport session cannot configure a different transport_lbtipc_sm_interval setting. Please refer to UMS Objects section of the Design Concepts in the documentation.	
Core-5688-1303: WARNING: LBT-IPC session exists and uses a different transport_lbtipc_↩transmission_window_size [d] than requested [d].	Once a source has created a transport session a subsequent source joining the same transport session cannot configure a different transport_lbtipc_transmission↩_window_size setting. Please refer to UMS Objects section of the Design Concepts in the documentation.	
Core-5688-1305: WARNING: Host has multiple RDMA-capable interfaces; going to use [s][s].	As UMS initializes, it scans for R↩MDA capable interfaces in the system. If more than one is found and a specific interface has not be configured, UMS uses the first one found.	Use "transport_lbtrdma_interface" to specify the desired RDMA interface.
Core-5688-13: could not allocate lu bytes [s:d]	The system was not able to allocate the amount of memory requested.	If the amount requested was particularly large, the problem may be a misconfiguration; however if the amount requested was relatively small, the physical memory on the machine may be over committed; try moving some applications to another machine.
Core-5688-14: could not reallocate u bytes [s:d]	The system was not able to allocate the amount of memory requested.	If the amount requested was particularly large, the problem may be a misconfiguration; however if the amount requested was relatively small, the physical memory on the machine may be over committed; try moving some applications to another machine.
Core-5688-1793: WARNING: Requested receiver attributes will be ignored, previous receiver for topic [s] has already defined the attributes.	Indicates a programming error where a receiver topic lookup was performed using different receiver attributes. In this case the original attributes are used.	

Core-5688-1795: WARNING: transport_lbtru_activity_timeout [d] is less than transport_lbtru_↩ nak_generation_interval [d], this can result in silent data loss if loss occurs within the activity timeout interval prior to the end of the transport session.	If the transport_lbtru_activity_↩ timeout is less than the transport↩ _lbtru_nak_generation_interval it is possible that a receiver can tear down the transport session before it was able to send a NAK for a lossed message. When this happens the message is unrecoverable.	
Core-5688-1797: LBT-RU client s.u sent unknown CREQ request x	UMS received a unicast message with an invalid message type. The message is dropped.	Contact Informatica support if this message occurs frequently or if using only one version of Ultra Messsaging software.
Core-5688-1798: LBMD EV version incorrect (u). Dropping.	UMS daemon received a message with an invalid version number. The message is dropped.	Contact Informatica support if this message occurs frequently or if using only one version of Ultra Messsaging software.
Core-5688-1799: LBMD EV type not support (u). Dropping.	UMS daemon received a message with an invalid message type. The message is dropped.	Contact Informatica support if this message occurs frequently or if using only one version of Ultra Messsaging software.
Core-5688-17: could not allocate u bytes for string dup [s:d]	The system was not able to allocate the amount of memory required for string duplication.	The physical memory on the machine may be over committed; try moving some applications to another machine.
Core-5688-1800: LBMD EV source type support (u). Dropping.	UMS daemon received a message from an unknown type of source. The message is dropped.	Contact Informatica support if this message occurs frequently or if using only one version of Ultra Messsaging software.
Core-5688-1801: LBMD EV unknown next header x, ignoring header.	UMS daemon received a message with a header that was not recognized. This header will be ignored, but the rest of the message will be processed. This is potentially due to a newer version of software sending messages and is not harmful.	Contact Informatica support if this message occurs frequently or if using only one version of Ultra Messsaging.
Core-5688-1802: LBMD EV unknown next header x, dropping message.	UMS daemon received a message with an invalid message type. The message is dropped.	Contact Informatica support if this message occurs frequently or if using only one version of Ultra Messsaging.
Core-5688-1804: HF message receiver function returned -1	An error occurred processing a message received by a hot failover receiver. The message was discarded.	If this occurs frequently, contact Informatica support.
Core-5688-1807: LBM_DEB↩ UG_MAXSIZE is greater than 4,294,967,295. Limiting to max.	Maximum rollover file size is capped at 4,294,967,295 (LBM_↩ DEBUG_LOG_ROLLOVER_SIZ↩ E_MAX)	Set LBM_DEBUG_MAXSIZE and/or the parameter for **lbm_↩ debugfile_maxsize()** to a lesser value to avoid this warning
Core-5688-1811: FATAL: WSA startup error - d	FATAL: Error in starting Windows Socket. The specific Windows Sockets Error Code is returned in the error message.	

Core-5688-1833: WARNING: Host has multiple multicast-capable interfaces; going to use [s][s].	This warning occurs if the host machine has multiple multicast-capable interfaces detected, and the context attributes do not specify an interface (via the resolver_↩ multicast_interface option). In this situation the first interface found is used.	
Core-5688-1836: CRITICAL: DBL support requested, but s not found. Ensure s is in the search path to enable DBL support.	This error results when dbl acceleration is specified through context configuration, but we are unable to locate the dbl shared library.	Try adding /opt/dbl/lib/ to your LD↩ _LIBRARY_PATH or the dbl.dll location to your PATH on Windows.
Core-5688-1841: default thread stack size is perhaps too small, u bytes.	The IPC receiver has created a thread for internal processing and the default stack size is too small. The size of the default stack size is dumped and will then be set to a larger size automatically.	
Core-5688-1842: reset thread stack size to u bytes.	The IPC receiver has created a thread for internal processing and the default stack size is too small and is reallocated. This message reports the new size of the stack.	
Core-5688-1847: default thread stack size is perhaps too small, u bytes.	The IPC receiver has created a thread for internal processing and the default stack size is too small. The size of the default stack size is dumped and will then be set to a larger size automatically.	
Core-5688-1848: reset thread stack size to u bytes.	The IPC receiver has created a thread for internal processing and the default stack size is too small and is reallocated. This message reports the new size of the stack.	
Core-5688-1864: dbl thread join↩ : WFSO res=d, GLE=d	An error occurred while waiting for the DBL thread to terminate.	Contact Informatica support.
Core-5688-1865: lbm_context_↩ delete: WFSO res=d, GLE=d	Error waiting for context thread to cleanly exit.	Contact Informatica support.
Core-5688-1866: lbm_context_↩ delete: I/O leakage: global_↩ pending_io=d	Small memory leak occurred, probably due to race condition in Windows.	Ignore, unless this happens many times per hour.
Core-5688-1879: timer returned error u [s]	UMS encountered an error expiring timers while processing events.	Contact Informatica support.
Core-5688-1880: wait returned error u [s]	UMS encountered an error processing an event on a file descriptor. The event is dropped.	Contact Informatica support.
Core-5688-1881: handle events returned error u [s]	The operating system returned error while processing a File Descriptor	The associated CoreApi log message should provide further information.
Core-5688-1883: timer returned error u [s]	UMS encountered an error expiring timers while processing events.	Contact Informatica support.
Core-5688-1888: timer returned error u [s]	UMS encountered an error expiring timers while processing events.	Contact Informatica support.
Core-5688-1889: wait returned error u [s]	UMS encountered an error processing an event on a file descriptor. The event is dropped.	Contact Informatica support.

Core-5688-1890: handle events returned error u [s]	Socket returned error while waiting for context deletion.	Ignore, unless this happens many times per hour.
Core-5688-1892: timer returned error u [s]	UMS encountered an error expiring timers while processing events.	Contact Informatica support.
Core-5688-261: LBT-RDMA: Client Connection: failed to register client	A client has joined the LBT-RDMA transport but an error occurred trying to add the client to the client map.	
Core-5688-262: LBT-RDMA: Client Disconnect: failed to remove client	A client has left the LBT-RDMA transport but an error occurred trying to remove the client to the client map.	
Core-5688-263: LBT-RDMA: VMS connection failed event (s)	A connection failed event has been received from the VRT library (formerly VMS library). Please refer to the description given.	
Core-5688-264: LBT-RDMA: unknown VMS connection event ID: d (s)	A connection event has been received from the VRT library (formerly VMS library) but the event is not understood. Please refer to the event ID and description given.	
Core-5688-265: LBT-RDMA: VMS Memory error event: (s)	A memory error event has been received from the VRT library (formerly VMS library). Please refer to the description given.	
Core-5688-266: LBT-RDMA: VMS Generic library event: (s)	A generic event has been received from the VRT library (formerly VMS library). Please refer to the description given.	
Core-5688-267: LBT-RDMA: VMS unknown library event: d (s)	An event was received from the VRT library (formerly VMS library) that is not understood. Please refer to the event ID and description given.	
Core-5688-270: LBT-RDMA: unknown VMS log level: d (s)	A log event was received from the VRT library (formerly VMS library) that is not understood. Please refer to the event ID and description given.	
Core-5688-271: LBT-RDMA: VMS transport event received but not expected: d (s)	A transport event was received from the VRT library (formerly VMS library) that is not expected. Please refer to the event ID and description given.	
Core-5688-272: LBT-RDMA: VMS fabric event received but not expected: d (s)	A fabric event was received from the VRT library (formerly VMS library) that is not expected. Please refer to the event ID and description given.	
Core-5688-273: LBT-RDMA: VMS unknown event class received: d (s)	An event was received from the VRT library (formerly VMS library) that is not understood. Please refer to the event ID and description given.	

Core-5688-276: lbtrdma_txw_↩ open: failed to subscribe to VMS store (0xx:s:u)	An error occurred when trying to join the LBT-RDMA transport given. This could occur if the Topic Advertisement is stale and the transport has already been deleted.	
Core-5688-277: lbtrdma_init: Problem loading VMS libraray	The VRT library (formerly VMS library) required for LBT-RDMA can not be loaded.	Verify correct installation.
Core-5688-278: lbtrdma_init: Can not initialize the VMS libary (d)	The VRT library (formerly VMS library) required for LBT-RDMA reported an initialization error (given).	Verify correct installation.
Core-5688-279: lbtrdma_init: Can not initialize VMS client (d)	The VRT library (formerly VMS library) required for LBT-RDMA reported a client initialization error (given).	Verify correct installation.
Core-5688-27: WARNING: s config variable s is deprecated. Use s instead.	Configuration option is deprecated and has been replaced, Informatica suggests the config option that can be used instead.	
Core-5688-280: lbtrdma_init: Can not initialize VMS server (d)	The VRT library (formerly VMS library) required for LBT-RDMA reported a server initialization error (given).	Verify correct installation.
Core-5688-281: lbtrdma_init: Can not register VMS event handler (d)	The VRT library (formerly VMS library) required for LBT-RDMA reported the given error when registering an event callback function.	Verify correct installation.
Core-5688-282: lbm_transport_↩ lbtrdma_ctlr_delete: WFSO res=d, GLE=d	The LBT-RDMA receiver thread failed to shutdown during context delete. Refer to the return status and OS error code given.	
Core-5688-283: default thread stack size is perhaps too small, u bytes.	The IPC receiver has created a thread for internal processing and the default stack size is too small. The size of the default stack size is dumped and will then be set to a larger size automatically.	
Core-5688-284: reset thread stack size to u bytes.	The IPC receiver has created a thread for internal processing and the default stack size is too small and is reallocated. This message reports the new size of the stack.	
Core-5688-285: LBT-RDMA Error: Creating Receiver Thread (d)	An error was returned when trying to create the LBT-RDMA recevier thread. Please refer to the OS error number given.	
Core-5688-286: CRITICAL: LBM license invalid [s]	Critical: The UMS license could not be validated. Contact Informatica support to verify the license.	
Core-5688-287: WARNING: LBM license warning [s]	Warning: The UMS license could not be validated. Contact Informatica support to verify the license.	

Core-5688-288: CRITICAL: LBM not licensed	Critical: The UMS license could not be validated. Check the correct license is being specified. Contact Informatica support to verify the license.	
Core-5688-28: WARNING: s config variable s is deprecated. Has no effect.	Configuration option is deprecated and has no effect, UMS will ignore the config options and continue operation.	
Core-5688-2947: default thread stack size is perhaps too small, u bytes.	The Datagram Acceleration receiver has created a thread for internal processing and the default stack size is too small. The size of the default stack size is dumped and will then be set to a larger size automatically.	
Core-5688-2948: reset thread stack size to u bytes.	The Datagram Acceleration receiver has created a thread for internal processing and the default stack size is too small and is reallocated. This message reports the new size of the stack.	
Core-5688-2950: NOTICE: could not drain Datagram Acceleration socket on exit. (Read d datagrams) Proceeding with cleanup.	During shutdown, the Datagram Acceleration thread closes all open sockets and then drains all user-space buffers.	No action necessary.
Core-5688-2951: WARNING: Datagram Acceleration enabled, but transport LBT-RM datagram max size d > d. Packet larger than MTU will be dropped.	Datagram Acceleration does not support fragmentation. Ultra Messaging displays this warning if the datagram_max_size is greater than 9000 bytes, which is the maximum frame size supported by Datagram Acceleration.	To guarantee that no datagrams are dropped for being too large, instruct UMS to fragment messages itself using the specified attribute.
Core-5688-2952: NOTICE: Datagram Acceleration enabled, but transport LBT-RM datagram max size d > d. Packets larger than M↩ TU will be dropped.	Datagram Acceleration does not support fragmentation. Ultra Messaging displays this warning if the datagram_max_size is greater than 1500 bytes, which is the standard frame size supported by Datagram Acceleration.	To guarantee that no datagrams are dropped for being too large, instruct UMS to fragment messages itself using the specified attribute.
Core-5688-2953: WARNING: Datagram Acceleration enabled, but transport LBT-RU datagram max size d > d. Packet larger than MTU will be dropped.	Datagram Acceleration does not support fragmentation. Ultra Messaging displays this warning if the datagram_max_size is greater than 9000 bytes, which is the maximum frame size supported by Datagram Acceleration.	To guarantee that no datagrams are dropped for being too large, instruct UMS to fragment messages itself using the specified attribute.
Core-5688-2954: NOTICE: Datagram Acceleration enabled, but transport LBT-RU datagram max size d > d. Packets larger than M↩ TU will be dropped.	Datagram Acceleration does not support fragmentation. Ultra Messaging displays this warning if the datagram_max_size is greater than 1500 bytes, which is the standard frame size supported by Datagram Acceleration.	To guarantee that no datagrams are dropped for being too large, instruct UMS to fragment messages itself using the specified attribute.

Core-5688-2955: WARNING: Datagram Acceleration enabled, but resolver datagram max size d > d. Packet larger than MTU will be dropped.	Datagram Acceleration does not support fragmentation. Ultra Messaging displays this warning if the datagram_max_size is greater than 9000 bytes, which is the maximum frame size supported by Datagram Acceleration.	To guarantee that no datagrams are dropped for being too large, instruct UMS to fragment messages itself using the specified attribute.
Core-5688-2956: NOTICE: Datagram Acceleration enabled, but resolver datagram max size d > d. Packets larger than MTU will be dropped.	Datagram Acceleration does not support fragmentation. Ultra Messaging displays this warning if the datagram_max_size is greater than 1500 bytes, which is the standard frame size supported by Datagram Acceleration.	To guarantee that no datagrams are dropped for being too large, instruct UMS to fragment messages itself using the specified attribute.
Core-5688-2959: WARNING: deleting Datagram Acceleration device returned d	The DBL device could not be closed cleanly. DBL currently does not return failure from the specified function, but the log message is included in case future versions return failure.	
Core-5688-2972: LBT-RDMA↩ : Source Paced, wakeup not expected	The LBT-RDMA transport is source paced and no rate limiter is implemented. Therefore, a wake-up event should not occur.	Contact Informatica support.
Core-5688-3096: Unable to create dctlr entry: s	This generally means memory couldn't be allocated. The error message included should specify the exact error condition.	
Core-5688-3101: NOTICE: UME receiver has ordered_delivery set to 0 and ume_explicit_ack_only set to 1.	This notice is issued when a U↩ MP receiver controller is created and is intended to warn of a potentially undesireable configuration setting. The UMP store considers an explicit ACK for any sequence number as an implicit ACK for all prior sequence numbers. Turning off ordered_delivery in combination with explicit ACKs has the potential to acknowledge messages which have not yet been received by the application.	
Core-5688-3102: NOTICE: UME group index u/u invalid, will set all group indices to 0	UMP has received an updated topic advertisement with an inconsistent UMP store group index. UMP recovers by "flattening" the stores into a single group.	
Core-5688-3103: NOTICE: UME store has out-of-range group index u, setting to 0.	UMP has received an updated topic advertisement specifying a store with a group index which is greater than the number of advertised store groups. UMP recovers by setting the group index for the store in question to zero.	

Core-5688-3104: NOTICE: setting compatibility (UME <= 1.2) mode for UME receiver. Extended events will not be delivered.	The UMP receiver controller creation logic has detected a receiver utilizing an older style (UMP version <= 1.2) registration callback function and turns off delivery of any extended UMP registration events.	
Core-5688-3105: Receiver Session ID specified. Specified RegID will be ignored	The system has detected that both a receiver Session ID and a receiver Reg ID have been specified either in the configuration file, via the configuration API or the RegID specification callback.	Specify only one of the Session ID or Reg ID.
Core-5688-3106: NOTICE: UME group index u/u invalid, will set all group indices to 0	UMP has received an updated topic advertisement with an inconsistent UMP store group index. UMP recovers by "flattening" the stores into a single group.	
Core-5688-3107: NOTICE: UME store has out-of-range group index u, setting to 0.	UMP has received an updated topic advertisement specifying a store with a group index which is greater than the number of advertised store groups. UMP recovers by setting the group index for the store in question to zero.	
Core-5688-3108: Receiver Session ID specified. Specified RegID will be ignored	The system has detected that both a receiver Session ID and a receiver Reg ID have been specified either in the configuration file, via the configuration API or the RegID specification callback.	Specify only one of the Session ID or Reg ID.
Core-5688-3115: NOTICE: UME receiver recovery low sequence number set beyond high sequence number + 1. Setting to high + 1. No recovery requested.	The receiver's low sequence number has been set beyond high sequence number + 1	This warning message indicates that this setting is unsupported and will be adjusted so that the receiver joins the live stream
Core-5688-3117: WARNING: received PREG RESP with out-of-bounds StoreID	A registration response message was received from a store but the store ID in the message was invalid. The response is discarded.	
Core-5688-3118: WARNING: received PREG RESP with unused StoreID	A registration response message was received from a store, but the source is not registered to that store.	Check the source log for more information. Source may have restarted
Core-5688-3122: NOTICE: 1.2 U↩ME store in use, turning off ACK to source	For compatability, UMP will automatically turn off sending ACKs to sources when a V1.x UMP store is used.	
Core-5688-3156: NOTICE: setting compatibility (UME <= 1.2) mode for UME source. Extended events will not be delivered.	UMP will tell you when it is setting compatibility to UMP <= 1.2 mode for UMP sources. When this setting is in effect, no extended events will not be delivered.	

Core-5688-3157: NOTICE: ume↩ _message_stability_notification not set. Setting for compatibility.	UMP will automatically set the ume_message_stability_↩ notification configuration option if it is not specified. Check the configuration guide for more information.	
Core-5688-3160: WARNING: UME source for topic "%s" store state ignored (not in initial state)	UME source is not in the expected state (initial state) when registration is in progress. No sequence number adjustment will be performed in this case.	
Core-5688-3165: WARNING: received keepalive without StoreID set	A UMP Source received a keep alive packet from a store without a Store ID in the packet.	
Core-5688-3166: WARNING: received keepalive with out-of-bounds StoreID u/u	A UMP Source received a keep alive packet from a store that has an out of range Store ID.	
Core-5688-3167: WARNING: received keepalive from non-active store u	A UMP Source received a keep alive packet from a non registered store. This may happen if a source did not successfully register with the particular store in question.	
Core-5688-3168: WARNING: received keepalive from store u with incorrect RegID u	A UMP Source received a keep alive packet from a store that has an invalid register ID.	

Core-5688-3169: NOTICE: store u:s:u reports it has not received TIR. Possible misconfiguration?	The UMP store reported it has not yet received a TIR (topic advertisement) for a topic which already has one or more registered sources.UMP registration happens via a different mechanism than topic resolution, and is sometimes a bit faster. Registration allows the source to begin sending, but the store does not actually begin listening for messages until it receives a topic advertisement from the source and sets up receivers for the appropriate topics.In that brief interval, the store will send these notices to the source, just in case you actually did forget to configure the store to listen to the correct topic resolution channel.Once the store receives a topic resolution advertisement and begins listening to the topic, the store will perform a Late Join recovery if the source has already started sending, and should be able to catch up unless you have changed your source's transmission window to a small value (by default, a source keeps 24 MB of data for retransmission).Our recommended delay before sending should prevent you from seeing this notice most of the time, but you may occasionally see it during store failover.	
Core-5688-3170: WARNING: received ACK with out-of-bounds StoreID u/u	A UMP Source received an acknowledgment packet with a store that is not within the range of Store IDs. This should not happen and is not a serious condition.	
Core-5688-3171: WARNING: received ACK from non-active store u	UMP received ACK from non-active store, this is not a serious condition unless it happens frequently and messaging is affected.	
Core-5688-3172: WARNING: received stability sACK without StoreID set	UMP received stability ACK or NACK without StoreID set, this is not a serious condition unless it happens frequently and messaging is affected.	
Core-5688-3173: source "%s" received CDELV without ACK ID set	Source received a delivery confirmation without the required identifier for the receiver.	This may indicate corrupted packets, check the system for network errors.
Core-5688-3178: WARNING: too many UME stores specified for topic resolution (max u)	Too many stores were specified when creating a source.	Reduce the number of stores in the ume_store configuration option.
Core-5688-3185: WARNING: too many UME store groups specified for topic resolution (max u)	Too many store groups were specified when creating a source.	Reduce the number of store groups in the ume_store_group configuration option.

Core-5688-3193: WARNING: too many UME stores specified for topic resolution (max u)	Too many stores were specified when creating a source.	Reduce the number of stores in the ume_store configuration option.
Core-5688-3203: INFO: OTR enabled but receiver is joining source with late join disabled	A receiver with OTR enabled is joining a source without late join.	The receiver will not be able to recover any lost messages from this source. To enable loss recovery, enable late join at the source.
Core-5688-3228: WARNING↩ : socket reuseaddr and socket exclusiveaddr set at the same time	The configuration options ∗↩ _tcp_reuseaddr and ∗_tcp_↩ exclusiveaddr (Windows only) can not be used at the same time.	Check configuration option settings.
Core-5688-3234: WARNING: could not create TCP connection socket: s	An error was returned from the OS while trying to create a socket (T↩ CP). Refer to the OS error number and message given after the U↩ MS message "could not create T↩ CP connection socket".	
Core-5688-3236: WARNING: could not set nonblock on TCP connection socket: s	An error was returned from the OS while trying to set the O_NONBL↩ OCK and O_NDELAY flags on the socket. Refer to the OS error number and message given after the UMS message "could not set nonblock on TCP connection socket".	
Core-5688-3238: WARNING: could not set nonblock on TCP connection socket: s	An error was returned from the OS while trying to set the O_NONBL↩ OCK and O_NDELAY flags on the socket. Refer to the OS error number and message given after the UMS message "could not set nonblock on TCP connection socket".	
Core-5688-3240: WARNING: could not bind, port d, on TCP connection socket: s	An error was returned from the OS while trying to bind the socket to the given port. Refer to the OS error number and message given after the UMS message "could not bind, port xxxxx, on TCP connection socket".	
Core-5688-3244: WARNING: could not set SO_KEEPALIVE on TCP connection socket: s	SO_KEEPALIVE was requested on the receiver end of TCP connection, but was not able to be set on the socket. This could be because the OS is not Windows or Linux, or because there was an error in the OS system call to set the socket options.	
Core-5688-3245: WARNING↩ : could not connect on TCP connection socket: s	An error was returned from the OS while trying to connect to the socket. Refer to the OS error number and message given after the UMS message "could not connect on TCP connection socket".	
Core-5688-3247: WARNING↩ : could not connect on TCP connection socket: s	An error was returned from the OS while trying to connect to the socket. Refer to the OS error number and message given after the UMS message "could not connect on TCP connection socket".	

Core-5688-3263: WARNING: could not set SO_REUSEADDR on multicast receive socket: s	An error was returned from the OS while trying to set the socket option SO_REUSEADDR per the ∗_tcp↩ _reuseaddr configuration parameter. Refer to the OS error number and message given after the U↩ MS message "could not set SO_↩ REUSEADDR on multicast receive socket".	
Core-5688-3265: WARNING: could not set SO_REUSEPORT on multicast receive socket: s	An error was returned from the OS while trying to set the socket option SO_REUSEPORT per the ∗_tcp↩ _reuseaddr configuration parameter. Refer to the OS error number and message given after the U↩ MS message "could not set SO_↩ REUSEPORT on multicast receive socket".	
Core-5688-3267: WARNING: could not bind, (port = d, multicast group = s), on multicast receive socket: s	An error occurred while trying to bind to the requested ip and port. The last part of this message contains the OS error code and associated text.	Consult your OS documentation for resolutions based on the error code.
Core-5688-3269: WARNING: could not IP_ADD_MEMBERSHIP on multicast receive socket: s	An error was returned from the OS while trying to set the socket option IP_ADD_MEMBERSHIP. Refer to the OS error number and message given after the UMS message "could not IP_ADD_MEMBERSH↩ IP on multicast receive socket".	
Core-5688-3271: WARNING: could not set nonblock on multicast receive socket: s	An error was returned from the OS while trying to set the O_NONBL↩ OCK and O_NDELAY flags on the socket. Refer to the OS error number and message given after the UMS message "could not set nonblock on multicast receive socket".	
Core-5688-3272: WARNING: could not set nonblock on multicast receive socket: s	An error was returned from the OS while trying to set the O_NONBL↩ OCK and O_NDELAY flags on the socket. Refer to the OS error number and message given after the UMS message "could not set nonblock on multicast receive socket".	
Core-5688-3273: WARNING: could not set multicast SO_RCV↩ BUF to requested value u	An error was returned from the OS while trying to set the socket option SO_RCVBUF per the ∗↩ _receiver_socket_buffer configuration parameter. The requested buffer size has not been set.	See the Configuration Guide for instructions about changing the OS limits.
Core-5688-3274: INFO: mcast rcv could only get SO_RCVBUF u (desired u)	The OS has set the socket option SO_RCVBUF but not to the value specified per the ∗_receiver_↩ socket_buffer configuration parameter. The actual and desired values are given in the message.	See the Configuration Guide for instructions about changing the OS limits.

Core-5688-3284: WARNING↩ : could not getaddress on dbl unicast rcv socket: s	An error occurred while creating a DBL socket, which may prevent the receiver from proceeding.	Contact Informatica support.
Core-5688-3289: WARNING: could not set unicast SO_RCVBUF to requested value u	An error was returned from the OS while trying to set the socket option SO_RCVBUF per the ∗↩ _receiver_socket_buffer configuration parameter. The requested buffer size has not been set.	See the Configuration Guide for instructions about changing the OS limits.
Core-5688-3290: INFO: unicast rcv could only get SO_RCVBUF u (desired u)		Increase the maximum send buffer size allowed by your OS. See the Configuration Guide for instructions about changing the OS limits.
Core-5688-3292: WARNING: could not find open unicast port in range [d-d] on dbl unicast bidir socket: s	Could not bind a port in the specified range. The range may need to be expanded or moved to a range where less ports are in use.	
Core-5688-3294: WARNING↩ : could not bind, port d, on dbl unicast bidir socket: s	An error occurred while creating a DBL socket, which may prevent the receiver from proceeding.	Contact Informatica support.
Core-5688-3296: WARNING↩ : could not getaddress on dbl unicast bidir socket: s	An error occurred while creating a DBL socket, which may prevent the receiver from proceeding.	Contact Informatica support.
Core-5688-3298: WARNING↩ : could not create unicast bidir socket: s	An error was returned from the OS while trying to create a socket (U↩ DP). Refer to the OS error number and message given after the UMS message "could not create unicast bidir socket".	
Core-5688-3300: WARNING: could not find open unicast port in range [d-d] on unicast bidir socket: s	There are no ports available in the given range. Use ∗_port_↩ low and/or ∗_port_high configuration parameters to specify a different range of ports to use.	
Core-5688-3302: WARNING: could not bind, port d, on unicast bidir socket: s	An error was returned from the OS while trying to bind the socket to the given port. Refer to the OS error number and message given after the UMS message "could not bind, port xxxxx, on unicast bidir socket".	
Core-5688-3304: WARNING: could not getsockname on unicast bidir socket: s	An error was returned from the OS while trying to get the socket name. Refer to the OS error number and message given after the UMS message "could not getsockname on unicast bidir socket".	
Core-5688-3306: WARNING: could not set nonblock on unicast bidir socket: s	An error was returned from the OS while trying to set the O_NONBL↩ OCK and O_NDELAY flags on the socket. Refer to the OS error number and message given after the UMS message "could not set nonblock on unicast bidir socket".	

Core-5688-3307: WARNING: could not set nonblock on unicast bidir socket: s	An error was returned from the OS while trying to set the O_NONBL↩ OCK and O_NDELAY flags on the socket. Refer to the OS error number and message given after the UMS message "could not set nonblock on unicast bidir socket".	
Core-5688-3308: WARNING: could not set bidir SO_RCVBUF to requested value u	An error was returned from the OS while trying to set the socket option SO_RCVBUF per the ∗↩ _receiver_socket_buffer configuration parameter. The requested buffer size has not been set.	See the Configuration Guide for instructions about changing the OS limits.
Core-5688-3309: INFO: ucast bidir could only get SO_RCVBUF u (desired u)	The OS has set the socket option SO_RCVBUF but not to the value specified per the ∗_receiver_↩ socket_buffer configuration parameter. The actual and desired values are given in the message.	See the Configuration Guide for instructions about changing the OS limits.
Core-5688-3330: lbm_socket_↩ send: msg dropped (EWOULDB↩ LOCK): adjust rate limit or buffers	The combination of the ∗_data_↩ rate_limit and ∗_rate_interval configuration parameters are used to determine the amount of data that will be sent at each interval. If that amount exceeds the configured ∗↩ _socket_buffer setting, each interval may experience an EWOUL↩ DBLOCK status from the OS due to the fact that the data does not fit into the OS buffer allocated.	If this message occurs often, review configuration option settings.
Core-5688-3331: lbm_socket_↩ send: msg dropped (EWOULDB↩ LOCK): adjust rate limit or buffers	The combination of the ∗_data_↩ rate_limit and ∗_rate_interval configuration parameters are used to determine the amount of data that will be sent at each interval. If that amount exceeds the configured ∗↩ _socket_buffer setting, each interval may experience an EWOUL↩ DBLOCK status from the OS due to the fact that the data does not fit into the OS buffer allocated.	If this message occurs often, review configuration option settings.
Core-5688-3335: lbm_socket_↩ sendb: msg dropped (EWOULD↩ BLOCK): adjust rate limit or buffers	The combination of the ∗_data_↩ rate_limit and ∗_rate_interval configuration parameters are used to determine the amount of data that will be sent at each interval. If that amount exceeds the configured ∗↩ _socket_buffer setting, each interval may experience an EWOUL↩ DBLOCK status from the OS due to the fact that the data does not fit into the OS buffer allocated.	If this message occurs often, review configuration option settings.

Core-5688-3336: lbm_socket_↩ sendb: msg dropped (EWOULD↩ BLOCK): adjust rate limit or buffers	The combination of the ∗_data_↩ rate_limit and ∗_rate_interval configuration parameters are used to determine the amount of data that will be sent at each interval. If that amount exceeds the configured ∗↩ _socket_buffer setting, each interval may experience an EWOUL↩ DBLOCK status from the OS due to the fact that the data does not fit into the OS buffer allocated.	If this message occurs often, review configuration option settings.
Core-5688-3340: lbm_socket_↩ sendtob: msg dropped (EWO↩ ULDBLOCK): adjust rate limit or buffers	The combination of the ∗_data_↩ rate_limit and ∗_rate_interval configuration parameters are used to determine the amount of data that will be sent at each interval. If that amount exceeds the configured ∗↩ _socket_buffer setting, each interval may experience an EWOUL↩ DBLOCK status from the OS due to the fact that the data does not fit into the OS buffer allocated.	If this message occurs often, review configuration option settings.
Core-5688-3341: lbm_socket_↩ sendtob: msg dropped (EWO↩ ULDBLOCK): adjust rate limit or buffers	The combination of the ∗_data_↩ rate_limit and ∗_rate_interval configuration parameters are used to determine the amount of data that will be sent at each interval. If that amount exceeds the configured ∗↩ _socket_buffer setting, each interval may experience an EWOUL↩ DBLOCK status from the OS due to the fact that the data does not fit into the OS buffer allocated.	If this message occurs often, review configuration option settings.
Core-5688-3345: lbm_socket_↩ sendbv: msg dropped (EWOULD↩ BLOCK): adjust rate limit or buffers	The combination of the ∗_data_↩ rate_limit and ∗_rate_interval configuration parameters are used to determine the amount of data that will be sent at each interval. If that amount exceeds the configured ∗↩ _socket_buffer setting, each interval may experience an EWOUL↩ DBLOCK status from the OS due to the fact that the data does not fit into the OS buffer allocated.	If this message occurs often, review configuration option settings.
Core-5688-3346: lbm_socket_↩ sendbv: msg dropped (EWOULD↩ BLOCK): adjust rate limit or buffers	The combination of the ∗_data_↩ rate_limit and ∗_rate_interval configuration parameters are used to determine the amount of data that will be sent at each interval. If that amount exceeds the configured ∗↩ _socket_buffer setting, each interval may experience an EWOUL↩ DBLOCK status from the OS due to the fact that the data does not fit into the OS buffer allocated.	If this message occurs often, review configuration option settings.

Core-5688-3351: lbm_socket_↩ sendtobv: msg dropped (EWO↩ ULDBLOCK): adjust rate limit or buffers	The combination of the ∗_data_↩ rate_limit and ∗_rate_interval configuration parameters are used to determine the amount of data that will be sent at each interval. If that amount exceeds the configured ∗↩ _socket_buffer setting, each interval may experience an EWOUL↩ DBLOCK status from the OS due to the fact that the data does not fit into the OS buffer allocated.	If this message occurs often, review configuration option settings.
Core-5688-3352: lbm_socket_↩ sendtobv: msg dropped (EWO↩ ULDBLOCK): adjust rate limit or buffers	The combination of the ∗_data_↩ rate_limit and ∗_rate_interval configuration parameters are used to determine the amount of data that will be sent at each interval. If that amount exceeds the configured ∗↩ _socket_buffer setting, each interval may experience an EWOUL↩ DBLOCK status from the OS due to the fact that the data does not fit into the OS buffer allocated.	If this message occurs often, review configuration option settings.
Core-5688-3365: NOTICE: wincport comp routine, invalid op	I/O operation completed on deleted connection.	Ignore unless this occurs many times per hour.
Core-5688-3368: NOTICE: WSA↩ SendTo error [send_pending d]: s	I/O operation could not be started due to socket error.	Ignore unless this occurs many times per hour.
Core-5688-3370: WARNING: lbm_sock_delete acc_conn has unknown optype d	An unexpected I/O operation was received while deleting a connection. Only occurs when using Windows completion ports.	Contact Informatica support if this message occurs frequently.
Core-5688-3375: unicast resolver s:u went inactive	The process received no communications from the LBMRD at the specified ip:port within the resolver_unicast_activity_timeout and is marked as inactive.	If the LBMRD is running properly, increasing the resolver_unicast_↩ activity_timeout to account for possible network congestion or an overloaded LBMRD can resolve this issue.
Core-5688-3377: LBMR Version 0xx incorrect (s:d len d). [s]. Dropping.	An LBMR packet was droppped because its version was invalid.	Investigate the listed IP and port for an application generating spurious traffic.
Core-5688-3378: LBMR packet malformed. Dropping. Origin: s↩ :d	An LBMR packet was droppped because its length did not match the length of the data received.	Investigate the listed IP and port for an application generating spurious traffic.
Core-5688-3379: LBMR optlen malformed. Dropping packet. Origin: s:d	An LBMR packet was droppped because its length did not match the length of the data received.	Investigate the listed IP and port for an application generating spurious traffic.
Core-5688-3380: LBMR optlen total_len malformed. Dropping packet. Origin: s:d	An LBMR packet was droppped because its length did not match the length of the data received.	Investigate the listed IP and port for an application generating spurious traffic.
Core-5688-3383: LBMR option invalid type [u]. Dropping packet. Origin: s:d	An LBMR packet was droppped because of an invalid option type.	Investigate the listed IP and port for an application generating spurious traffic.
Core-5688-3384: LBMR Type 0xx incorrect (s:d len d). [s]. Dropping.	An LBMR packet was droppped due to an invalid type.	Investigate the listed IP and port for an application generating spurious traffic.
Core-5688-3385: LBMR Topic Query Record malformed. Dropping remainder. Origin: s:d	An LBMR packet was droppped because it could not be parsed.	Investigate the listed IP and port for an application generating spurious traffic.

Core-5688-3386: LBMR Topic Info Record malformed. Dropping remainder. Origin: s:d	An LBMR packet was droppped because it could not be parsed.	Investigate the listed IP and port for an application generating spurious traffic.
Core-5688-3387: LBMR Extended Type 0xx incorrect (s:d len d). [s]. Dropping.	LBM resolver has encountered an unknown extended type and dropped the packet. Each type is reported only once per resolver.	Can be caused by mixed versions sharing a topic resolution address or malformed/forged packets.
Core-5688-3388: LBMR Topic Info Record Option not Length. Dropping remainder.	UMS encountered a mismatch in the length of a received message and its headers, determining the rest of the message to be invalid. The remainder of the message is dropped.	Contact Informatica support if this message occurs frequently.
Core-5688-3389: LBMR Topic Info Record Length Option not correct size. Dropping remainder.	UMS encountered a mismatch in the length of a received message and its headers, determining the rest of the message to be invalid. The remainder of the message is dropped.	Contact Informatica support if this message occurs frequently.
Core-5688-3390: LBMR Topic Info Record Total Length not large enough. Dropping remainder.	UMS encountered a mismatch in the length of a received message and its headers, determining the rest of the message to be invalid. The remainder of the message is dropped.	Contact Informatica support if this message occurs frequently.
Core-5688-3391: LBMR Topic Info Record UME Option not correct size. Dropping remainder.	UMS encountered a mismatch in the length of a received message and its headers, determining the rest of the message to be invalid. The remainder of the message is dropped.	Contact Informatica support if this message occurs frequently.
Core-5688-3392: LBMR Topic Info Record Late Join Option not correct size. Dropping remainder.	UMS encountered a mismatch in the length of a received message and its headers, determining the rest of the message to be invalid. The remainder of the message is dropped.	Contact Informatica support if this message occurs frequently.
Core-5688-3393: LBMR Topic Info Record UME Store Option not correct size. Dropping remainder.	UMS encountered a mismatch in the length of a received message and its headers, determining the rest of the message to be invalid. The remainder of the message is dropped.	Contact Informatica support if this message occurs frequently.
Core-5688-3394: LBMR Topic Info Record UME Store Group Option not correct size. Dropping remainder.	UMS encountered a mismatch in the length of a received message and its headers, determining the rest of the message to be invalid. The remainder of the message is dropped.	Contact Informatica support if this message occurs frequently.
Core-5688-3397: LBMR Topic Info Record Option not understood and does not have ignore. Dropping remainder.	UMS received a message with a header that was not recognized. This header and the rest of the message will be ignored. This is potentially due to a newer version of software sending messages and is not harmful.	Contact Informatica support if this message occurs frequently or if using only one version of Ultra Messaging.

Core-5688-3398: LBMR Topic Info Record Option length incongruent. Dropping remainder.	UMS encountered a mismatch in the length of a received message and its headers, determining the rest of the message to be invalid. The remainder of the message is dropped.	Contact Informatica support if this message occurs frequently.
Core-5688-3400: LBMR Topic Mgmt Record Length not correct size. Dropping remainder.	UMS encountered a mismatch in the length of a received message and its headers, determining the rest of the message to be invalid. The remainder of the message is dropped.	Contact Informatica support if this message occurs frequently.
Core-5688-3401: WARNING: could not undefine topic from topic map when deleting	Warning: UMS could not remove a topic from topic map.	Contact Informatica support if this message occurs frequently.
Core-5688-3402: LBMR WC TQR pcre_compile [s] malformed [d][s]. Dropping.	UMS detected a malformed PC↩ RE pattern for a wild card receiver, it will drop the Topic Query Response.	Contact Informatica support if this message occurs frequently or if topic resolution appears to be failing.
Core-5688-3403: LBMR WC TQR regcomp [s] malformed [s]. Dropping.	In topic resolution process, UMS detected a malformed registration complete signal for a wild card receiver, it will drop the Topic Query Response.	Contact Informatica support if this message occurs frequently or if topic resolution appears to be failing.
Core-5688-3404: LBMR WC TQR Type 0xx [s] not understood. Dropping.	In topic resolution process, UMS detected a malformed type for a wild card receiver, it will drop the Topic Query Response.	Contact Informatica support if this message occurs frequently or if topic resolution appears to be failing.
Core-5688-3405: LBMR WC TQR pcre_exec [s][s][d] error d	UMS detected a malformed PCRE pattern for a wild card receiver during topic resolution. It will drop the Topic Query Response. This is not a serious condition unless it happens frequently and the resolution process is affected.	
Core-5688-3415: message receiver function returned -1	An error occurred processing a message received by a receiver. The receiver's delivery controller was unable to pass the message to the application. The message was discarded.	Contact Informatica support if this message occurs frequently.
Core-5688-3426: WARNING↩ : Topic [s] joining session [s] which exists and uses a different transport_lbtrm_nak_backoff_↩ interval [d] than requested [d].	After a receiver has created a transport session, a subsequent receiver joining the same transport session cannot configure a different transport_lbtrm_nak_backoff↩ _interval setting.	
Core-5688-3427: WARNING↩ : Topic [s] joining session [s] which exists and uses a different transport_lbtrm_nak_suppress_↩ interval [d] than requested [d].	After a receiver has created a transport session, a subsequent receiver joining the same transport session cannot configure a different transport_lbtrm_nak_↩ suppress_interval setting.	

Core-5688-3428: WARNING↩ : Topic [s] joining session [s] which exists and uses a different transport_lbtrm_nak_generation↩ _interval [d] than requested [d].	After a receiver has created a transport session, a subsequent receiver joining the same transport session cannot configure a different transport_lbtrm_nak_↩ generation_interval setting.	
Core-5688-3429: WARNING↩ : Topic [s] joining session [s] which exists and uses a different transport_lbtrm_preactivity_↩ timeout [d] than requested [d].	After a receiver has created a transport session, a subsequent receiver joining the same transport session cannot configure a different transport_lbtrm_preactivity↩ _timeout setting.	
Core-5688-3430: WARNING↩ : Topic [s] joining session [s] which exists and uses a different transport_lbtrm_activity_timeout [d] than requested [d].	After a receiver has created a transport session, a subsequent receiver joining the same transport session cannot configure a different transport_lbtrm_activity↩ _timeout setting.	
Core-5688-3431: WARNING↩ : Topic [s] joining session [s] which exists and uses a different transport_lbtrm_send_naks [d] than requested [d].	After a receiver has created a transport session, a subsequent receiver joining the same transport session cannot configure a different transport_lbtrm_send_naks setting.	
Core-5688-3432: WARNING↩ : Topic [s] joining session [s] which exists and uses a different transport_lbtru_nak_backoff_↩ interval [d] than requested [d].	After a receiver has created a transport session, a subsequent receiver joining the same transport session cannot configure a different transport_lbtru_nak_backoff_↩ interval setting.	
Core-5688-3433: WARNING↩ : Topic [s] joining session [s] which exists and uses a different transport_lbtru_nak_suppress_↩ interval [d] than requested [d].	After a receiver has created a transport session, a subsequent receiver joining the same transport session cannot configure a different transport_lbtru_nak_↩ suppress_interval setting.	
Core-5688-3434: WARNING↩ : Topic [s] joining session [s] which exists and uses a different transport_lbtru_nak_generation_↩ interval [d] than requested [d].	After a receiver has created a transport session, a subsequent receiver joining the same transport session cannot configure a different transport_lbtru_nak_↩ generation_interval setting.	
Core-5688-3435: WARNING↩ : Topic [s] joining session [s] which exists and uses a different transport_lbtru_activity_timeout [d] than requested [d].	After a receiver has created a transport session, a subsequent receiver joining the same transport session cannot configure a different transport_lbtru_activity_↩ timeout setting.	
Core-5688-3439: WARNING↩ : Topic [s] joining session [s] which exists and uses a different transport_lbtipc_activity_timeout [d] than requested [d].	After a receiver has created a transport session, a subsequent receiver joining the same transport session cannot configure a different transport_lbtipc_activity↩ _timeout setting.	

Core-5688-3541: PCRE exec [s][s][d] error d	An error occurred while trying to match the pattern listed in the first bracketed expression. The topic string attempting to be matched is supplied as the second bracketed expression, and its length is supplied as the third bracketed expression. The error that occurred was internal to PCRE, and the error code is listed in the PCRE documentation for return values of pcre_exec.	
Core-5688-3546: LBMR WC TQR pcre_compile [s] malformed [d][s]. Dropping.	UMS detected a malformed PC↩RE pattern for a wild card receiver, it will drop the Topic Query Response.	Contact Informatica support if this message occurs frequently or if topic resolution appears to be failing.
Core-5688-3547: LBMR WC TQR regcomp [s] malformed [s]. Dropping.	In topic resolution process, UMS detected a malformed registration complete signal for a wild card receiver, it will drop the Topic Query Response.	Contact Informatica support if this message occurs frequently or if topic resolution appears to be failing.
Core-5688-3548: LBMR WC TQR Type 0xx [s] not understood. Dropping.	In topic resolution process, UMS detected a malformed type for a wild card receiver, it will drop the Topic Query Response.	Contact Informatica support if this message occurs frequently or if topic resolution appears to be failing.
Core-5688-3549: LBMR WC Cache pcre_exec [s][s][d] error d	An error occurred while trying to match the pattern listed in the first bracketed expression. The topic string attempting to be matched is supplied as the second bracketed expression, and its length is supplied as the third bracketed expression. The error that occurred was internal to PCRE, and the error code is listed in the PCRE documentation for return values of pcre_exec.	
Core-5688-3555: wildcard message receiver function returned -1	The callback configured for wildcard receiver messages returned -1 while processing an immediate message.	
Core-5688-3691: Sending request with request port binding disabled.	An lbm request is being sent, but the request port used to receive responses is disabled via the request_tcp_bind_request_port (context) configuration option. See the documentation for this configuration option for more information.	
Core-5688-3698: Response for request query index u received. No request known.	A response was received that does not correspond to an existing request. This usually indicates that the responder took too long to respond, and the requestor had already deleted the request object when the response was received.	

Core-5688-3701: Response for request query index u received. No request known.	A response was received that does not correspond to an existing request. This usually indicates that the responder took too long to respond, and the requestor had already deleted the request object when the response was received.	
Core-5688-3702: WARNING: deletion timeout from s:u while sending response or UIM	A response or a unicast immediate message was still being sent when the corresponding TCP connection closed.	Contact Informatica support.
Core-5688-3723: Sending unicast immediate request with request port binding disabled.	An lbm request is being sent via unicast immediate messaging, but the request port used to receive responses is disabled via the request_tcp_bind_request_port (context) configuration option.	See the Ultra Messaging Configuration Guide.
Core-5688-3762: unknown fd_to↩ _be action d	Internal error while handling socket; probable memory corruption.	Contact Informatica support.
Core-5688-3773: epoll_ctl: Tried to register a bad file descriptor	The fd_management_type is set to epoll and either the user tried to register a non-socket file descriptor or a socket that was registered unexpectedly became invalid between creating the file descriptor and registering it. Linux's epoll currently only supports socket file descriptors, and not normal files or other file descriptor types.	Contact Informatica support if this warning occurs frequently.
Core-5688-3774: epoll_ctl: Tried to perform an operation on a socket that is already closed	The fd_management_type is set to epoll and file descriptor registration was attempted for a socket that was already closed. This can sometimes happen if a socket is closed immediately after it is created, but before it is registered.	Contact Informatica support if this warning occurs frequently.
Core-5688-3777: s:d: sock=p, sock->sock=p, handle=p, io_↩ pending=d, op_recv=p, op_acc_↩ conn=p	Pre-assert data: a message which contains selected internal state information useful for diagnosing the cause of certain failed assertions. Does not occur during normal operation.	
Core-5688-3781: s:d: sock=p, sock->sock=p, handle=p, io_↩ pending=d, op_recv=p, op_acc_↩ conn=p	Pre-assert data: a message which contains selected internal state information useful for diagnosing the cause of certain failed assertions. Does not occur during normal operation.	
Core-5688-3782: s:d: sock=p, sock->sock=p, handle=p, io_↩ pending=d, op_recv=p, op_acc_↩ conn=p	Pre-assert data: a message which contains selected internal state information useful for diagnosing the cause of certain failed assertions. Does not occur during normal operation.	

Core-5688-3786: s:d: sock=p, sock->sock=p, handle=p, io_↩ pending=d, op_recv=p, op_acc_↩ conn=p	Pre-assert data: a message which contains selected internal state information useful for diagnosing the cause of certain failed assertions. Does not occur during normal operation.	
Core-5688-3793: s:d: sock=p, sock->sock=p, handle=p, io_↩ pending=d, op_recv=p, op_acc_↩ conn=p	Pre-assert data: a message which contains selected internal state information useful for diagnosing the cause of certain failed assertions. Does not occur during normal operation.	
Core-5688-3794: s:d: sock=p, sock->sock=p, handle=p, io_↩ pending=d, op_recv=p, op_acc_↩ conn=p	Pre-assert data: a message which contains selected internal state information useful for diagnosing the cause of certain failed assertions. Does not occur during normal operation.	
Core-5688-3804: kevent fatal error: (d) s	When using the kqueue file descriptor management type on Mac OS X, an unexpected error was returned from the kevent system call. This could be caused by a variety of reasons, including being out of memory, or trying to register an invalid file descriptor, or accessing memory incorrectly.	
Core-5688-3805: mapentry->writecb was NULL	A registered file descriptor had a write or connect event, but the registered callback was NULL. This should never happen, and indicates possible application memory corruption.	
Core-5688-3806: Dropping cancelled write or connect event on handle d	A write or connect event occurred on the indicated file descriptor (handle), but the user's registered write or connect event callback was cancelled immediately before the event happened.	
Core-5688-3807: mapentry->readcb was NULL	A registered file descriptor had a read, accept, or close event, but the registered callback was NULL. This can happen if the file descriptor had a write or connect event at about the same time, and the read, accept, or close event callback was cancelled for that file descriptor within its write or connect event callback. This warning is usually harmless, but may indicate improper application design.	

Core-5688-3808: Dropping cancelled read, accept, or close event on handle d	A read, accept, or close event occurred on the indicated file descriptor (handle), but the user's registered read, accept, or close event callback was cancelled immediately before the event happened.	
Core-5688-3809: mapentry->exceptcb was NULL	A registered file descriptor had an exception event, but the registered exception callback was NULL. This can happen if the file descriptor had a write, connect, read, accept, or close event at about the same time, and the file descriptor's exception callback was cancelled within any of its other callbacks. This warning is usually harmless, but may indicate improper application design.	
Core-5688-3810: Dropping cancelled except event on handle d	An exception event occurred on the indicated file descriptor (handle), but the user's registered exception event callback was cancelled immediately before the event happened.	
Core-5688-3811: mapentry->writecb was NULL	A registered file descriptor had a write or connect event, but the registered callback was NULL. This should never happen, and indicates possible application memory corruption.	
Core-5688-3812: Dropping cancelled write or connect event on handle d	A write or connect event occurred on the indicated file descriptor (handle), but the user's registered write or connect event callback was cancelled immediately before the event happened.	
Core-5688-3813: mapentry->readcb was NULL	A registered file descriptor had a read, accept, or close event, but the registered callback was NULL. This can happen if the file descriptor had a write or connect event at about the same time, and the read, accept, or close event callback was cancelled for that file descriptor within its write or connect event callback. This warning is usually harmless, but may indicate improper application design.	

Core-5688-3815: mapentry->exceptcb was NULL	A registered file descriptor had an exception event, but the registered exception callback was NULL. This can happen if the file descriptor had a write, connect, read, accept, or close event at about the same time, and the file descriptor's exception callback was cancelled within any of its other callbacks. This warning is usually harmless, but may indicate improper application design.	
Core-5688-3816: Dropping cancelled except event on handle d	An exception event occurred on the indicated file descriptor (handle), but the user's registered exception event callback was cancelled immediately before the event happened.	
Core-5688-3817: mapentry->writecb was NULL	A registered file descriptor had a write or connect event, but the registered callback was NULL. This should never happen, and indicates possible application memory corruption.	
Core-5688-3818: Dropping cancelled write or connect event on handle d	A write or connect event occurred on the indicated file descriptor (handle), but the user's registered write or connect event callback was cancelled immediately before the event happened.	
Core-5688-3819: mapentry->readcb was NULL	A registered file descriptor had a read, accept, or close event, but the registered callback was NULL. This can happen if the file descriptor had a write or connect event at about the same time, and the read, accept, or close event callback was cancelled for that file descriptor within its write or connect event callback. This warning is usually harmless, but may indicate improper application design.	
Core-5688-3820: Dropping cancelled read, accept, or close event on handle d	A read, accept, or close event occurred on the indicated file descriptor (handle), but the user's registered read, accept, or close event callback was cancelled immediately before the event happened.	

Core-5688-3821: mapentry->exceptcb was NULL	A registered file descriptor had an exception event, but the registered exception callback was NULL. This can happen if the file descriptor had a write, connect, read, accept, or close event at about the same time, and the file descriptor's exception callback was cancelled within any of its other callbacks. This warning is usually harmless, but may indicate improper application design.	
Core-5688-3822: Dropping cancelled except event on handle d	An exception event occurred on the indicated file descriptor (handle), but the user's registered exception event callback was cancelled immediately before the event happened.	
Core-5688-3823: mapentry->writecb was NULL	A registered file descriptor had a write or connect event, but the registered callback was NULL. This should never happen, and indicates possible application memory corruption.	
Core-5688-3824: Dropping cancelled write or connect event on handle d	A write or connect event occurred on the indicated file descriptor (handle), but the user's registered write or connect event callback was cancelled immediately before the event happened.	
Core-5688-3825: mapentry->readcb was NULL	A registered file descriptor had a read, accept, or close event, but the registered callback was NULL. This can happen if the file descriptor had a write or connect event at about the same time, and the read, accept, or close event callback was cancelled for that file descriptor within its write or connect event callback. This warning is usually harmless, but may indicate improper application design.	
Core-5688-3826: Dropping cancelled read, accept, or close event on handle d	A read, accept, or close event occurred on the indicated file descriptor (handle), but the user's registered read, accept, or close event callback was cancelled immediately before the event happened.	

Core-5688-3827: mapentry->exceptcb was NULL	A registered file descriptor had an exception event, but the registered exception callback was NULL. This can happen if the file descriptor had a write, connect, read, accept, or close event at about the same time, and the file descriptor's exception callback was cancelled within any of its other callbacks. This warning is usually harmless, but may indicate improper application design.	
Core-5688-3828: Dropping cancelled except event on handle d	An exception event occurred on the indicated file descriptor (handle), but the user's registered exception event callback was cancelled immediately before the event happened.	
Core-5688-3831: mapentry->writecb was NULL	A registered file descriptor had a write or connect event, but the registered callback was NULL. This should never happen, and indicates possible application memory corruption.	
Core-5688-3832: Dropping cancelled write or connect event on handle d	A write or connect event occurred on the indicated file descriptor (handle), but the user's registered write or connect event callback was cancelled immediately before the event happened.	
Core-5688-3833: mapentry->readcb was NULL	A registered file descriptor had a read, accept, or close event, but the registered callback was NULL. This can happen if the file descriptor had a write or connect event at about the same time, and the read, accept, or close event callback was cancelled for that file descriptor within its write or connect event callback. This warning is usually harmless, but may indicate improper application design.	
Core-5688-3835: mapentry->exceptcb was NULL	A registered file descriptor had an exception event, but the registered exception callback was NULL. This can happen if the file descriptor had a write, connect, read, accept, or close event at about the same time, and the file descriptor's exception callback was cancelled within any of its other callbacks. This warning is usually harmless, but may indicate improper application design.	

Core-5688-3836: Dropping cancelled except event on handle d	An exception event occurred on the indicated file descriptor (handle), but the user's registered exception event callback was cancelled immediately before the event happened.	
Core-5688-3838: NOTICE: wincport p results [d] (d,d,p,p) op x	Internal error handling descriptors; probable timing race condition.	Contact Informatica support.
Core-5688-3847: NOTICE: wincport p line d WSA err d, s (peer s) (op x)	A Windows Completion port operation ended with a failure.	Examine the reported WSA Error code and take the appropriate action.
Core-5688-3849: lbm_fd_handle↩_events line d: wincport recv err (s) from peer (s)	The Windows completion port call to recv returned an error.	Look up the WSA error and take appropriate action.
Core-5688-3864: NOTICE: wincport p results [d] (d,d,p,p) op x	Internal error handling descriptors; probable timing race condition.	Contact Informatica support.
Core-5688-3883: mapentry->exceptcb was NULL	A registered file descriptor had an exception event, but the registered exception callback was NULL. This can happen if the file descriptor had a write, connect, read, accept, or close event at about the same time, and the file descriptor's exception callback was cancelled within any of its other callbacks. This warning is usually harmless, but may indicate improper application design.	
Core-5688-3884: Dropping cancelled except event on handle d	An exception event occurred on the indicated file descriptor (handle), but the user's registered exception event callback was cancelled immediately before the event happened.	
Core-5688-3885: mapentry->writecb was NULL	A registered file descriptor had a write or connect event, but the registered callback was NULL. This should never happen, and indicates possible application memory corruption.	
Core-5688-3886: Dropping cancelled write or connect event on handle d	A write or connect event occurred on the indicated file descriptor (handle), but the user's registered write or connect event callback was cancelled immediately before the event happened.	
Core-5688-3887: mapentry->readcb was NULL	A registered file descriptor had a read, accept, or close event, but the registered callback was NULL. This can happen if the file descriptor had a write or connect event at about the same time, and the read, accept, or close event callback was cancelled for that file descriptor within its write or connect event callback. This warning is usually harmless, but may indicate improper application design.	

Core-5688-3888: Dropping cancelled read, accept, or close event on handle d	A read, accept, or close event occurred on the indicated file descriptor (handle), but the user's registered read, accept, or close event callback was cancelled immediately before the event happened.	
Core-5688-3889: kevent returned event with unknown or unsupported filter type	kevent returned a file descriptor with a filter type that was not E↩VFILT_READ or EVFILT_WRITE (such as EVFILT_SIGNAL, EVF↩ILT_PROC, etc.). UMS does not register any file descriptors for any filters other than EVFILT_READ or EVFILT_WRITE, so this is very unusual and might indicate memory corruption.	
Core-5688-3890: handle events returned error u [s]	Socket returned error while waiting for context deletion.	Ignore, unless this occurs many times per hour.
Core-5688-3896: wildcard message receiver function returned -1	The callback configured for wildcard receiver messages returned -1 while processing an immediate message.	
Core-5688-3897: wildcard message receiver function returned -1	The callback configured for wildcard receiver messages returned -1 while processing an immediate message.	
Core-5688-390: event dispatch - unknown event type (d)	The event dispatch loop encountered an unexpected event type. This is probably due to an unexpected network event occurring.	Check that the network is stable. Contact Informatica support if this message occurs frequently.
Core-5688-3919: Sending multicast immediate request with request port binding disabled.	An lbm request is being sent via multicast immediate messaging, but the request port used to receive responses is disabled via the request_tcp_bind_request_port (context) configuration option. See the documentation for this configuration option for more information.	
Core-5688-3927: New unfragged message in TCP buffer before first message is complete.	With transport_tcp_multiple_↩receiver_behavior set to bounded↩_latency or source_paced and old messages are being removed to make room for new messages, the first (oldest) message is fragmented but is incomplete. Processing will continue anyway.	
Core-5688-3928: New message in TCP buffer before first message is complete.	With transport_tcp_multiple_↩receiver_behavior set to bounded↩_latency or source_paced and old messages are being removed to make room for new messages, the first (oldest) message is fragmented but is incomplete. Processing will continue anyway.	

Core-5688-3929: No more messages in TCP buffer before old message is complete.	With transport_tcp_multiple_receiver_behavior set to bounded_latency or source_paced and old messages are being removed to make room for new messages, the message being removed is fragmented and only a portion of it could be found and removed. Processing will continue anyway.	
Core-5688-3930: New unfragged message in TCP buffer before old fragged message is complete.	With transport_tcp_multiple_receiver_behavior set to bounded_latency or source_paced and old messages are being removed to make room for new messages, the message being removed is fragmented and only a portion of it could be found and removed. Processing will continue anyway.	
Core-5688-3931: New message in TCP buffer before old message is complete.	With transport_tcp_multiple_receiver_behavior set to bounded_latency or source_paced and old messages are being removed to make room for new messages, the message being removed is fragmented and only a portion of it could be found and removed. Processing will continue anyway.	
Core-5688-3986: PCRE exec [s][s][d] error d	An error occurred while trying to match the pattern listed in the first bracketed expression. The topic string attempting to be matched is supplied as the second bracketed expression, and its length is supplied as the third bracketed expression. The error that occurred was internal to PCRE, and the error code is listed in the PCRE documentation for return values of pcre_exec.	
Core-5688-4099: multiple interfaces match criteria - will use [s][s]	This warning occurs if an interface is specified by name for any of the *_interface options, and multiple interfaces on the host match the supplied name. In this case the first matching interface will be used.	Specify interfaces such that only a single interface is matched.
Core-5688-4100: multiple interfaces match criteria - will use [s][s]	This warning occurs if an interface is specified by name for any of the *_interface options, and multiple interfaces on the host match the supplied name. In this case the first matching interface will be used.	Specify interfaces such that only a single interface is matched.
Core-5688-4103: multiple interfaces match criteria - will use [s][s]	This warning occurs if an interface is specified by name for any of the *_interface options, and multiple interfaces on the host match the supplied name. In this case the first matching interface will be used.	Specify interfaces such that only a single interface is matched.

Core-5688-4104: multiple interfaces match criteria - will use [s][s]	This warning occurs if an interface is specified by name for any of the ∗_interface options, and multiple interfaces on the host match the supplied name. In this case the first matching interface will be used.	Specify interfaces such that only a single interface is matched.
Core-5688-4106: WARNING: could not scan IPv4 interfaces.	As UMS initializes, it scans all the network cards in the system. This scan either failed due to a lack of available resources. For example, this might be because there are no network cards that are active or the system has run out of sockets.	Check the system availability of network resources. Contact Informatica support if all resources appear to be available.
Core-5688-4107: WARNING: could not find a multicast capable, non-loopback interface.	As UMS initializes, it scans all the network cards in the system. If no network card is listed as supporting multicast capabilities, Ultra Messaging generates this warning.	Check network card capabilities and configuration.
Core-5688-4108: WARNING: using first broadcast capable interface instead.	As UMS initializes, it scans all the network cards in the system. No multicast capable card was found, but a broadcast capable card was found. The first broadcast capable card will be used.	Check network card configuration if you expect one of the network cards to be multicast capable.
Core-5688-410: failed to allocate hypertopic callback vector of u bytes [s:d]	There was a memory allocation failure while creating the vector of callbacks associated with a received message destined for a HyperTopic receiver. This means that a message will not be delivered to some subset of registered HyperTopic receivers.	
Core-5688-428: INFO: realloced max rate controller srcs to u	This occurs when a lbtru source has a larger than expected number of clients (10∗number of transports configured). This may be expected, in which case this can be ignored. It could also indicate a misconfiguration.	Verify that the number of clients for the source in question is correct.
Core-5688-429: WARNING: realloced max rate controller srcs to u	This occurs when a lbtru source has a larger than expected number of clients (10∗number of transports configured). This may be expected, in which case this can be ignored. It could also indicate a misconfiguration.	Verify that the number of clients for the source in question is correct.
Core-5688-434: received read indication on daemon connection - unknown socket	This message is used for internal purpose.	Contact Informatica support.
Core-5688-436: daemon control data received in unknown state d	This message is used for internal purpose.	Contact Informatica support.
Core-5688-438: daemon control data received in unknown state d	This message is used for internal purpose.	Contact Informatica support.
Core-5688-439: invalid action response on control channel [s]	This message is used for internal purpose.	Contact Informatica support.
Core-5688-440: invalid topicname on control channel [s]	This message is used for internal purpose.	Contact Informatica support.

Core-5688-441: invalid action response on control channel [s]	This message is used for internal purpose.	Contact Informatica support.
Core-5688-446: lbmc_handle_msg returned -1.	This message usually indicates that Ultra Messaging cannot get the memory required to process incoming messages.	Check with your system administrator for possible reasons that Ultra Messaging is not able to get sufficient memory. Contact Informatica support if this message keeps occurring.
Core-5688-447: LBMC datagram malformed. d d Dropping remainder. Origin: s:d	UM received a message with the length field is less than lbm header size.	Contact Informatica support if this message occurs frequently.
Core-5688-448: LBMC datagram malformed, msglen 0. Dropping. Origin: s:d	UMS received a message with the length field set to 0. The message will be dropped.	Contact Informatica support if this message occurs frequently.
Core-5688-449: LBMC datagram malformed. d d Dropping remainder. Origin: s:d	A datagram's actual and expected length do not match. If using UM routers, this difference might occur if there is a mismatch in the configured values for configuration option transport_∗_datagram_max↩_size settings at different portals. It is also possible that this datagram may have come from a non-Ultra-Messaging application.	If using the UM router, check configuration to ensure that values for transport_∗_datagram_max_↩size options match across portals. Otherwise, check network for other non-UM applications.
Core-5688-450: LBMC version incorrect (u). Dropping. Origin: s:d.	The LBMC version value in the received message is either corrupted or not supported by the UM product receiving messages.	Find the LBMC version value of the received message in the log line starting with Core-5688-450 and check if it is supported in the product you are using.
Core-5688-451: LBMC type not supported (u). Dropping. Origin↩: s:d.	A non-UM formatted message was sent to a port that UM is listening to. This has been seen when UM and non-UM applications have overlapping port ranges, or a network security port scanner. This can happen to TCP sources or the context's request port.	Reconfigure UM and/or the non-↩UM applications to have non-overlapping port ranges, or exclude the UM host from the port scanner.
Core-5688-538: NOTICE: Source "%s" retention_size_limit less than max message size. Will retain at least 1 message.	The source retention_size_limit has been configured to be less than the maximum message size of 65536 bytes. It will still retain at least 1 message.	Set the retention_size_limit to be equal to or greater than the max message size
Core-5688-539: NOTICE: Source "%s" has no retention settings (1 message retained max)	Only 1 message will be retained max due to default retention settings at the Source.	
Core-5688-542: received ACK for unknown source from s:d	UMS received ACK for unknown source. This is not a serious problem but indicates that there is a mismatch between this process and another.	Check the system for other abnormal behavior, such as applications restarting.

Core-5688-587: WARNING↩ : transport_lbtrm_activity_timeout [d] is less than transport_lbtrm↩ _nak_generation_interval [d], this can result in silent data loss if loss occurs within the activity timeout interval prior to the end of the transport session.	If the transport_lbtrm_activity_↩ timeout is less than the transport↩ _lbtrm_nak_generation_interval it is possible that a receiver can tear down the transport session before it was able to send a NAK for a lossed message. When this happens the message is unrecoverable.	
Core-5688-58: loading default config file failed: s	Loading the config file specified with the LBM_DEFAULT_C↩ ONFIG_FILE environment variable failed, due to either a missing file, inappropriate access privileges, or an error in the config file itself.	
Core-5688-593: IPC Error: Creating Receiver Signal Semaphore	An error occurred when an IPC receiver attempted to allocate a shared signaling semaphore. This could be caused by a permission error or no more resources. Please refer to the documentation for lbtipc_resource_manager.	
Core-5688-594: IPC Error: Initializing Receiver Signal Semaphore (d)	An error occurred when an I↩ PC receiver attempted to initialize a shared signaling semaphore. Please refer to the OS error number given.	
Core-5688-595: IPC Error: Creating Receiver Monitor Semaphore	An error occurred when an I↩ PC receiver attempted to allocate a shared monitoring semaphore. This could be caused by a permission error or no more resources. Please refer to the documentation for lbtipc_resource_manager.	
Core-5688-596: IPC Error: Initializing Receiver Monitor Semaphore (d)	An error occurred when an I↩ PC receiver attempted to initialize a shared monitoring semaphore. Please refer to the OS error number given.	
Core-5688-597: IPC Error: Initializing Receiver Monitor Semaphore (d)	An error occurred when an I↩ PC receiver attempted to initialize a shared monitoring semaphore. Please refer to the OS error number given.	
Core-5688-598: IPC Error: Creating Shared Event (d) (s)	An IPC receiver could not create a shared Event. This could be caused by a permission error or the resource already exists. Please refer to the OS error number and resource name given.	
Core-5688-599: IPC Error: Creating Receiver Monitor Mutex (d) (s)	An IPC receiver could not create a shared monitoring Mutex. This could be caused by a permission error or the resource already exists. Please refer to the OS error number and resource name given.	

Core-5688-600: IPC Error: Getting Receiver Monitor Mutex (d) (s)	An IPC receiver could not acquire the shared monitoring Mutex. This could be caused by a permission error. Please refer to the OS error number and resource name given.	
Core-5688-601: lbtipc_rcv_↩create: can not obtain transport information	An IPC receiver is attempting to join an IPC transport but can not obtain the transport information from the IPC shared memory buffer. This could happen if the IPC transport has been deleted before the receiver has joined.	
Core-5688-602: IPC Error: Joining transport; no more free receiver slots	An IPC receiver is attempting to join an IPC transport that has no more free slots for receivers. Please adjust the "transport_↩lbtipc_maximum_receivers_per_↩transport" configuration attribute.	
Core-5688-603: default thread stack size is perhaps too small, u bytes.	The IPC receiver has created a thread for internal processing and the default stack size is too small. The size of the default stack size is dumped and will then be set to a larger size automatically.	
Core-5688-604: reset thread stack size to u bytes.	The IPC receiver has created a thread for internal processing and the default stack size is too small and is reallocated. This message reports the new size of the stack.	
Core-5688-605: IPC Error: Creating Receiver Thread (d)	An error occurred when the IPC receiver attempted to create a thread for internal processing. Please refer to the OS error number given.	
Core-5688-614: LBT-IPC: failed to open shared memory s (d)	The IPC shared memory region could not be opened for reading. This could occur if a receiver attempts to join an IPC transport after the source has been deleted. Please reference the OS error number given.	
Core-5688-615: LBT-IPC: failed to map shared memory s (d)	An error occurred trying to map a pointer to the IPC shared memory region. Please refer to the OS error number given.	
Core-5688-617: LBT-IPC: failed to map shared memory s (d)	An error occurred trying to map a pointer to the IPC shared memory region. Please refer to the OS error number given.	
Core-5688-618: LBT-IPC: can not open shared semaphore (d)	The shared semaphore used to ensure mutual exclusion while accessing IPC shared resources could not be opened. This could occur if a receiver attempts to join an IPC transport after the source has been deleted. Please refer to the OS error number given.	

Core-5688-619: LBT-IPC: failed to open shared memory s (d)	The IPC shared memory region could not be opened for reading. This could occur if a receiver attempts to join an IPC transport after the source has been deleted. Please reference the OS error number given.	
Core-5688-620: LBT-IPC: failed to map shared memory s (d)	An error occurred trying to map a pointer to the IPC shared memory region. Please refer to the OS error number given.	
Core-5688-622: LBT-IPC: failed to map shared memory s (d)	An error occurred trying to map a pointer to the IPC shared memory region. Please refer to the OS error number given.	
Core-5688-624: LBT-IPC: locking problem detected in lbtipc_txw_↩rcvr_node_alloc (d)	An error occurred with the shared object used to ensure mutual exclusion when accessing IPC shared resources. Please refer to the OS error number given.	
Core-5688-625: LBT-IPC: locking problem detected in lbtipc_txw_↩rcvr_node_alloc (d)	An error occurred with the shared object used to ensure mutual exclusion when accessing IPC shared resources. Please refer to the OS error number given.	
Core-5688-626: LBT-IPC: locking problem detected in lbtipc_txw_↩rcvr_node_alloc (d)	An error occurred with the shared object used to ensure mutual exclusion when accessing IPC shared resources. Please refer to the OS error number given.	
Core-5688-627: LBT-IPC: locking problem detected in lbtipc_txw_↩rcvr_node_alloc (d)	An error occurred with the shared object used to ensure mutual exclusion when accessing IPC shared resources. Please refer to the OS error number given.	
Core-5688-628: lbm_transport_↩lbtipc_ctlr_delete: WFSO res=d, GLE=d	The WaitForSingleObject() Windows call return an error while waiting for the IPC Receiver thread to exit. Refer to the response and OS error number given.	
Core-5688-630: LBTIPC: error mapping (initial) resource registry (d)	An error occurred when attempting to map memory to the registry file. The registry is used to store IPC shared objects that are in use. The OS error number is given.	
Core-5688-632: LBTIPC: error initializing registry semaphore (d)	The semaphore used to ensure mutual exclusion while accessing the registry could not be initialized. The registry is used to store IPC shared objects that are in use. Refer to the documentation for lbtipc↩_resource_manager.	
Core-5688-633: LBTIPC: error opening resource registry (d)	An error occurred when attempting to open or map memory to the registry file. The OS error number is given.	

Core-5688-635: LBTIPC: resource registry version mismatch: use lbtipc_resource_manager to clean-up and delete registry.	An IPC registry file existed, and contained the wrong version.	For this to happen, a registry file with incorrect version information would have to be deliberately put in place. 3.5 and post3.5 use different naming schemes for registries, so this can't happen due to version mismatch.
Core-5688-636: LBTIPC: error re-mapping resource registry (entries: d) (d)	An error occurred when attempting to re-map memory to the registry file. The registry is used to store IPC shared objects that are in use. The size in entries and OS error number is given.	
Core-5688-637: LBTIPC: error opening/recreating registry semaphore (d)	The semaphore used to ensure mutual exclusion while accessing the registry could not be created. The registry is used to store IPC shared objects that are in use. The OS error number is given.	
Core-5688-638: LBTIPC: error reinitializing registry semaphore (d)	The semaphore used to ensure mutual exclusion while accessing the registry could not be initialized. The registry is used to store IPC shared objects that are in use. The OS error number is given.	
Core-5688-639: LBTIPC: error re-creating resource registry (d)	The registry used to store IPC shared objects that are in use could not be created. The OS error number is given.	
Core-5688-640: LBTIPC: error in re-sizing resource registry (d)	The registry used to store IPC shared objects that are in use could not be re-sized (expanded). The OS error number is given.	
Core-5688-641: LBTIPC: error re-mapping resource registry (d)	An error occurred when attempting to re-map memory to the registry file (file expansion). The registry is used to store IPC shared objects that are in use. The OS error number is given.	
Core-5688-642: LBTIPC: No free semaphores could be found	A free semaphore required for the LBT-IPC transport could not be found. Refer to the documentation for lbtipc_resource_manager.	
Core-5688-644: LBTIPC: error opening semaphore (d)	A free semaphore allocated for the LBT-IPC transport could not be opened. The OS error number is given.	
Core-5688-645: LBTIPC: error freeing semaphore; key 0xx not found	A semaphore allocated for the L↩ BT-IPC transport could not be freed due to an invalid internal key.	Contact Informatica support.
Core-5688-646: LBT-IPC unexpected send error	An attempt was made to transfer a message or message fragment to the IPC shared memory buffer but that operation failed. This is cause by a failure with trying to obtain the lock for the shared memory buffer.	

Core-5688-647: LBT-IPC failed to start stalled timer	The IPC source is blocked waiting for a receiver but received an error trying to start the block check timer.	
Core-5688-648: LBT-IPC failed to start stalled timer	The IPC source is blocked waiting for a receiver but received an error trying to start the block check timer.	
Core-5688-649: LBT-IPC unexpected send error	An attempt was made to transfer a message or message fragment to the IPC shared memory buffer but that operation failed. This is cause by a failure with trying to obtain the lock for the shared memory buffer.	
Core-5688-650: LBT-IPC unexpected send error	An attempt was made to transfer a message or message fragment to the IPC shared memory buffer but that operation failed. This is cause by a failure with trying to obtain the lock for the shared memory buffer.	
Core-5688-651: LBT-IPC Problem Opening Signal Semaphore (d)	The IPC source has received a connection request from an IPC receiver and has failed to open the shared signaling semaphore. This could happen if the connection request is old and the receiver was already deleted or the source does not have permission to open the object. Please reference the OS error number given.	
Core-5688-652: LBT-IPC Problem Opening Event (d)	The IPC source has received a connection request from an IPC receiver and has failed to open the shared Event. This could happen if the connection request is old and the receiver was already deleted or the source does not have permission to open the object. Please reference the OS error number given.	
Core-5688-653: LBT-IPC Problem Opening Monitor Semaphore (d)	The IPC source has received a connection request from an IPC receiver but has failed to open the Monitoring Semaphore. This could happen if the connection request is old and the receiver was already deleted or the source does not have permission to open the object. Please reference the OS error number given.	
Core-5688-654: LBT-IPC Problem Opening Monitor Mutex (d) (s)	The IPC source has received a connection request from an IPC receiver but has failed to open the Monitoring Mutex. This could happen if the connection request is old and the receiver was already deleted or the source does not have permission to open the object. Please reference the OS error number and object name given.	

Core-5688-692: topic level retransmission request index, u, not found	A unicast immediate message was requested for retransmission, but the message is no longer required. This is because the message was already received due a previous retransmission request or because the request has already timed out.	
Core-5688-694: received retransmit request for unknown source on a thread/context without a topic resolver.	UMS received retransmit request for unknown source. This is not a serious problem but indicates that there is a mismatch between this process and another.	Check the system for other abnormal behavior, such as applications restarting.
Core-5688-696: received retransmit request for unknown source[u] from ip:port[s:d]	UMS received retransmit request for unknown source. This is not a serious problem but indicates that there is a mismatch between this process and another.	Check the system for other abnormal behavior, such as applications restarting.
Core-5688-697: received lji request for unknown source on a thread/context without a topic resolver in ctx[p] from ip:port[s:d] for topic[u]	A context without a resolver module has received an Late-Join Initiation REQ.This is not a serious problem but indicates that there is a mismatch between this process and another.	Check the system for other abnormal behavior, such as applications restarting.
Core-5688-699: received lji request for unknown source: from ip:port[s:d] for topic[u]	UMS received Late Join Request message for unknown source. The source transport and topic indices are not mapped to this context. This may indicate that a source had been deleted, or there is a mismatch between this process and another.	Check the system for port re-use on application restart and similar behavior.
Core-5688-701: received PREG response for unknown source.	Each topic created and registered by a UMP context has a unique topic index. The UMP registration response handler for this context has received a response for a topic index not contained in the collection of sources currently being processed by the context. This is not a serious condition unless it continues to occur frequently and sources being handled by the context are not being successfully registered.	
Core-5688-702: received PREG response for unknown source.	Each topic created and registered by a UMP context has a unique topic index. The UMP registration response handler for this context has received a response for a topic index not contained in the collection of sources currently being processed by the context. This is not a serious condition unless it continues to occur frequently and sources being handled by the context are not being successfully registered.	

Core-5688-703: received PREG response for unknown receiver.	Each topic created and registered by a UMP context has a unique topic index. The UMP registration response handler for this context has received a response for a topic index not contained in the collection of receivers currently being processed by the context. This is not a serious condition unless it continues to occur frequently and receivers being handled by the context are not being successfully registered.	
Core-5688-705: received UME Keepalive with unknown type x	UMP received keepalive signal which the type cannot be determined. This is not a serious problem unless it happens frequently.	
Core-5867-19: Message selector parser error [s]	An error was encountered parsing the message selector set for a receiver	Ensure the receiver has a valid message selector
Core-5867-20: Message selector parser error [Unterminated string s]	An error was encountered parsing the message selector set for a receiver	Ensure the receiver has a valid message selector
Core-5867-21: Message selector parser error [Invalid character 'c']	An error was encountered parsing the message selector set for a receiver	Ensure the receiver has a valid message selector
Core-5867-22: Message selector parser error [Error compiling pattern s at offset d: err s]	An error was encountered parsing the message selector set for a receiver	Ensure the receiver has a valid message selector
Core-5867-23: Message selector parser error [Error compiling pattern s at offset d: err s]	An error was encountered parsing the message selector set for a receiver	Ensure the receiver has a valid message selector
Core-5872-1: LBMR Topic Info Record Total Length too large. Dropping remainder.	This error is logged if the options portion of the received TIR packet would overflow the stack-allocated buffer.	This error indicates that packets with erroneous length fields are being received by UM. This could be due to applications sending to the incorrect IP and port, or by a malicious attack.
Core-5872-2: LBMR Queue Info Record Total Length too large. Dropping remainder.	This error is logged if the options portion of the received QIR packet would overflow the stack-allocated buffer.	This error indicates that packets with erroneous length fields are being received by UM. This could be due to applications sending to the incorrect IP and port, or by a malicious attack.
Core-5894-1: lbm_timer_expire↩ : Exceeded d timer expirations in one iteration	UM encountered a condition where the specified number of timers were expiring at the same time. This is undesirable and indicates a CPU burst usage. To prevent starvation of network processing, some timers are deferred for processing and network processing is resumed. All timers are eventually processed with a minor delay - this is acceptable behaviour. If this message occurs frequently, contact Informatica support for further guidance.	Examine the configuration of this process to determine if there are timers likely to coincide in their expirations or if there are many sources created very quickly. If there are, it is suggested that the timers or source creation are staggered.

Core-5894-2: lbm_timer_expire↩ : Exceeded d timer expirations in one iteration	UM encountered a condition where the specified number of timers were expiring at the same time. This is undesirable and indicates a CPU burst usage. To prevent starvation of network processing, some timers are deferred for processing and network processing is resumed. All timers are eventually processed with a minor delay - this is acceptable behaviour. If this message occurs frequently, contact Informatica support for further guidance.	Examine the configuration of this process to determine if there are timers likely to coincide in their expirations or if there are many sources created very quickly. If there are, it is suggested that the timers or source creation are staggered.
Core-5927-1: Couldn't establish immediate message channel for destination s:d	A connection could not be established to send a unicast message.	Check the logs for previous messages indicating the actual cause, usually a socket error of some kind.
Core-5935-1: LBMC header with malformed length field. Dropping. Origin: s:d	An LBMC header was received with a malformed length field.	Check the originating IP and port for applications sending malformed data.
Core-5935-2: LBMC header with malformed length field. Dropping. Origin: s:d	An LBMC header was received with a malformed length field.	Check the originating IP and port for applications sending malformed data.
Core-5935-3: LBMC header with malformed length field. Dropping. Origin: s:d	An LBMC header was received with a malformed length field.	Check the originating IP and port for applications sending malformed data.
Core-5935-4: LBMC header with malformed length field. Dropping. Origin: s:d	An LBMC header was received with a malformed length field.	Check the originating IP and port for applications sending malformed data.
Core-5935-5: LBMC header with malformed length field. Dropping. Origin: s:d	An LBMC header was received with a malformed length field.	Check the originating IP and port for applications sending malformed data.
Core-5935-6: LBMC header with malformed length field. Dropping. Origin: s:d	An LBMC header was received with a malformed length field.	Check the originating IP and port for applications sending malformed data.
Core-5936-1: LBMR optlen total↩ _len malformed. Dropping packet. Origin: s:d	A topic resolution message was received with a length field that did not match the data received.	Inspect the originating IP and Port for applications sending malformed topic resolution messages.
Core-5937-1: Invalid 0-length L↩ BMR option. Dropping packet. Origin: s:d	An LBMR packet was droppped because of a 0-length option field.	Investigate the listed IP and port for an application generating spurious traffic.
Core-5937-2: LBMR Topic Query Record malformed. Dropping remainder. Origin: s:d	An LBMR packet was droppped because it could not be parsed.	Investigate the listed IP and port for an application generating spurious traffic.
Core-5937-3: LBMR Topic Info Record malformed. Dropping remainder. Origin: s:d	An LBMR packet was droppped because it could not be parsed.	Investigate the listed IP and port for an application generating spurious traffic.
Core-5937-4: LBMR Topic Management Record malformed. Dropping remainder. Origin: s:d	An LBMR packet was droppped because it could not be parsed.	Investigate the listed IP and port for an application generating spurious traffic.
Core-5937-5: LBMR Topic Management Record malformed. Dropping remainder. Origin: s:d	An LBMR packet was droppped because it could not be parsed.	Investigate the listed IP and port for an application generating spurious traffic.

Core-5937-6: LBMR Topic Info Record option length invalid. Dropping Remainder.	UMS encountered a malformed L↩ BMR packet and discarded it.	
Core-5937-7: LBMR Queue Info Record option length invalid. Dropping remainder.	A QIR packet was received that contained a 0-length option record.	
Core-5938-1: Header size is incorrect for header type. Dropping. Origin: s:d.	A malformed LBMC header was received.	Check the originating IP and port for an application sending incorrectly formed packets.
Core-5938-2: Header size is incorrect for header type. Dropping. Origin: s:d.	A malformed LBMC header was received.	Check the originating IP and port for an application sending incorrectly formed packets.
Core-5938-3: Received lbmc message with incorrect header length. Dropping. Origin: s:d.	A malformed LBMC header was received.	Check the originating IP and port for an application sending incorrectly formed packets.
Core-5957-1: s: XInclude processing failed.	There was error processing XML includes.	Check your XML configuration file syntax.
Core-5957-2: XInclude processing failed.	There was error processing XML includes.	Check your XML configuration file syntax.
Core-5957-3: s: Error removing xml:base attribute	There was error processing XML includes.	Check your XML configuration file syntax, or contact Informatica support.
Core-5957-4: Error removing xml↩ :base attribute	There was error processing XML includes.	Check your XML configuration file syntax, or contact Informatica support.
Core-5975-50: LBMC Route Info Neighbor header size incorrect. Dropping. Origin: s:d.	Route Info message header contains incorrect size.	Check source (IP:Port) for possible version mismatch or service attack.
Core-5988-1: Attempting to Respond to a Request from s with port set to zero.	A response is being generated but the response port is zero so the data will not be delivered to the requester.	This occurs when the requester disables binding of the request port. See request_tcp_bind_↩ request_port configuration option.
Core-5988-2: Source Side Filtering request from [s] but response port set to zero. No messages will be received from this source.	The receiver is registering Source Side Filtering interest but the source response port is zero. The interest will not arrive at the source and therefore will not send this receiver any messages.	This occurs when the source disables binding of the request port. See request_tcp_bind_request_↩ port configuration option.
Core-5988-3: Topic Advertisement [s] contains UME Store info from s but port is set to zero. Ignoring invalid UME Store Info.	A Topic Advertisement was received with UME Information but the store port was zero. The UME Information is being ignored.	This occurs when the Source or Store disables binding of the request port. See request↩ _tcp_bind_request_port configuration option.
Core-5988-4: Topic Advertisement [s] contains UME Source Info from s but port is set to zero. Ignoring invalid UME Source Info.	A Topic Advertisement was received with UME Information but the source port was zero. The UME Information is being ignored.	This occurs when the Source or Store disables binding of the request port. See request↩ _tcp_bind_request_port configuration option.
Core-5988-5: Topic Advertisement [s] contains Late Join from s but port is set to zero. Ignoring invalid Late Join setup.	A Topic Advertisement was received with Late Join Information but the source port was zero. The Late Join Information is being ignored.	This occurs when the Source disables binding of the request port. See request_tcp_bind_request_↩ port configuration option.

Core-5988-6: Topic Advertisement [s] contains UME Store Info from s but port is set to zero. Ignoring invalid UME Store Info.	A Topic Advertisement was received with UME Information but the store port was zero. The UME Information is being ignored.	This occurs when the Source or Store disables binding of the request port. See request↩_tcp_bind_request_port configuration option.
Core-5988-7: Topic Advertisement [s] contains ULB Info from s but port is set to zero. Ignoring invalid ULB Info.	A Topic Advertisement was received with ULB Information but the source port was zero. The UME Information is being ignored.	This occurs when the Source disables binding of the request port. See request_tcp_bind_request_↩port configuration option.
Core-5990-1: UMQ command failed because the REQUIR↩ED queue authentication failed.. cmd_type=0xx	warning the user credential is not correct for authentication purpose	
Core-6020-6: inflight bytes would be negative, resetting to 0	A call to decrement the number of inflight bytes would set it to be negative.	Nothing, it is forcibly set to 0 in this case.
Core-6020-7: inflight bytes would be negative, resetting to 0	Amount of bytes being decremented would cause inflight bytes to be negative	Current flight size could be incorrect due to unknown reasons, use the set flight size API to reset values
Core-6033-12: [LBMMON] Invalid statistics packet received	An invalid statistics packet was received.	Contact Informatica support.
Core-6033-13: [LBMMON] Format module source deserialize function returned d, s	A source statistics message was unable to be parsed.	Contact Informatica support.
Core-6033-14: [LBMMON] Format module receiver deserialize function returned d, s	A receiver transport statistics message was unable to be parsed.	Contact Informatica support.
Core-6033-15: [LBMMON] Format module event queue deserialize function returned d, s	An event queue statistics message was unable to be parsed.	Contact Informatica support.
Core-6033-16: [LBMMON] Format module context deserialize function returned d, s	A context statistics message was unable to be parsed.	Contact Informatica support.
Core-6033-17: [LBMMON] Format module receive function returned d, s	An error occured while receiving a statistics message.	Contact Informatica support.
Core-6033-26: [LBMMON] Error d returned from transport module send function, s	Failed to send a source transport statistics packet.	Contact Informatica support.
Core-6033-27: [LBMMON] Error d returned from format module source serialize function, s	Failed to format a source transport statistics packet.	Contact Informatica support.
Core-6033-28: [LBMMON] Error d returned from transport module send function, s	Failed to send a receiver transport statistics packet.	Contact Informatica support.
Core-6033-29: [LBMMON] Error d returned from format module receiver serialize function, s	Failed to format a receiver transport statistics packet.	Contact Informatica support.
Core-6033-30: [LBMMON] Error d returned from transport module send function, s	Failed to send an event queue statistics packet.	Contact Informatica support.
Core-6033-31: [LBMMON] Error d returned from format module event queue serialize function, s	Failed to format an event queue statistics packet.	Contact Informatica support.

Core-6033-32: [LBMMON] Error d returned from transport module send function, s	Failed to send a context statistics packet.	Contact Informatica support.
Core-6033-33: [LBMMON] Error d returned from format module context serialize function, s	Failed to format a context statistics packet.	Contact Informatica support.
Core-6033-34: [LBMMON] Error d returned from transport module send function, s	Failed to send an IM source transport statistics packet.	Contact Informatica support.
Core-6033-35: [LBMMON] Error d returned from format module source serialize function, s	Failed to format an IM source transport statistics packet.	Contact Informatica support.
Core-6033-36: [LBMMON] Error d returned from transport module send function, s	Failed to send an IM receiver transport statistics packet.	Contact Informatica support.
Core-6033-37: [LBMMON] Error d returned from format module receiver serialize function, s	Failed to format an IM receiver transport statistics packet.	Contact Informatica support.
Core-6033-881: timer scheduled <= MIN_CLOCK_RES_MSEC (lu ms) @ [ld.ld]: Rescheduling for d ms	The requested timer length was too small to be accurately applied based on the clock resolution, and has been forcibly increased so it does not execute immediately.	Use 0 for immediate timeout, or MIN_CLOCK_RES_MSEC for lowest pause before timeout
Core-6033-998: Requested retransmission queue is too big [lu]	The requested retransmission queue size is too big	Consider reducing retransmission-request-processing-rate
Core-6033-999: malloc failure	Malloc failure	Box may be out of memory, consider reducing retransmission-request-processing-rate
Core-6036-1: LBMC stream corruption detected. Tearing down stream. Origin: s:d	Data was received in an inconsistent state from an LBMC TCP stream.	Investigate the listed IP and port for applications or network hardware that may be causing message corruption.
Core-6036-2: LBMC stream corruption detected. Tearing down stream. Origin: s:d	Data was received in an inconsistent state from an LBMC TCP stream.	Investigate the listed IP and port for applications or network hardware that may be causing message corruption.
Core-6056-1: Malformed fragment header detected, discarding.	A fragment header was detected with a malformed length field.	If this message is seen frequently, it may indicate that network hardware is corrupting packets, or that a program is generating spurious traffic directed at a port used by L↩BM.
Core-6190-1: LBMR TIR contained inconsistent transport information.	UM encountered an advertisement indicating a transport that was already known, but the OTID did not match the known OTID.	The advertisement's originating IP and port will be logged in a subsequent message. Investigate that IP and port for an application generating spurious traffic.
Core-6190-2: LBMR Topic Info Record malformed. Dropping remainder. Origin: s:d	An LBMR packet was droppped because it could not be parsed.	Investigate the listed IP and port for an application generating spurious traffic.
Core-6238-1: PCRE exec [s][s][d] error d	A receiver was configured with a invalid LIKE expression message selector	Fix the LIKE expression to be JMS compliant
Core-6238-2: PCRE compile [s][s] error d	A receiver was configured with a invalid LIKE expression message selector	Fix the LIKE expression to be JMS compliant

Core-6259-10: LBMR Topic Resolution Remote Domain Route packet malformed (d:d). Dropping. Origin: s:d	LBMR Data received contain invalid data.	Check the source (IP:Port) for possible version mismatch or service attack.
Core-6259-11: Too many domains for routing message u; not sending message.	With the given number of domains, a domain routing message cannot be generated and traffic will not be routed properly.	The customer can increase the resolver_datagram_max_size. However, this message indicates a suspiciously large number of domains.
Core-6259-13: Failed sending Unicast Buffer: cannot find route to Remote Domain u (s:d)	There is no known route to the given domain. This could happen momentarily as an LBM context learns the domain routes at startup.	This will be reported once per domain. A "route discovered to domain" should follow soon after. If not, the Gateway configuration should be examined for inconsistencies.
Core-6259-14: Failed sending Unicast Buffer: cannot find route to Remote Domain: u (s:d)	There is no known route to the given domain. This could happen momentarily as an LBM context learns the domain routes at startup.	This will be reported once per domain. A "route discovered to domain" should follow soon after. If not, the Gateway configuration should be examined for inconsistencies.
Core-6259-15: Failed sending Unicast Control Message: cannot find route to Remote Domain u (s:d)	There is no known route to the given domain. This could happen momentarily as an LBM context learns the domain routes at startup.	This will be reported once per domain. A "route discovered to domain" should follow soon after. If not, the Gateway configuration should be examined for inconsistencies.
Core-6259-16: Failed sending Unicast Message: cannot find route to Remote Domain u (s:d)	There is no known route to the given domain. This could happen momentarily as an LBM context learns the domain routes at startup.	This will be reported once per domain. A "route discovered to domain" should follow soon after. If not, the Gateway configuration should be examined for inconsistencies.
Core-6259-19: LBMC Topic Index header size incorrect. Dropping. Origin: s:d.	Topic Index message header contains incorrect size.	Check source (IP:Port) for possible version mismatch or service attack.
Core-6259-1: Re-routing Domain ID u: old: s:d new: s:d	There was a change in the route to the given host. This can happen at startup, when a Gateway goes down, or when there is connectivity problem.	This is normal on occasion. Persistent messages could indicate a network or Gateway issue.
Core-6259-20: Domain ID discovered; context resides in Domain ID u	Log message indicates a Domain ID discovery.	This is not an error.
Core-6259-21: Failed sending Response: cannot find route to Remote Domain u (s:d)	There is no known route to the given domain. This could happen momentarily as an LBM context learns the domain routes at startup.	This will be reported once per domain. A "route discovered to domain" should follow soon after. If not, the Gateway configuration should be examined for inconsistencies.
Core-6259-22: Failed sending Response: cannot find route to Remote Domain u (s:d)	There is no known route to the given domain. This could happen momentarily as an LBM context learns the domain routes at startup.	This will be reported once per domain. A "route discovered to domain" should follow soon after. If not, the Gateway configuration should be examined for inconsistencies.

Core-6259-23: Failed sending Response: cannot find route to Remote Domain u (s:d)	There is no known route to the given domain. This could happen momentarily as an LBM context learns the domain routes at startup.	This will be reported once per domain. A "route discovered to domain" should follow soon after. If not, the Gateway configuration should be examined for inconsistencies.
Core-6259-24: Failed sending Response: cannot find route to Remote Domain u (s:d)	There is no known route to the given domain. This could happen momentarily as an LBM context learns the domain routes at startup.	This will be reported once per domain. A "route discovered to domain" should follow soon after. If not, the Gateway configuration should be examined for inconsistencies.
Core-6259-25: Deserialize Response: Context in domain u received response with no domain: s:d	A context that knows it's domain deserialized a response that contained no Domain ID. The response will likely not get back to the sender. This could happen momentarily as an LBM contexts learn their domain routes at startup.	If the warning persists, the Gateway configuration should be examined for inconsistencies.
Core-6259-26: Route discovered to Domain ID u through s:d	A new route to the given Domain ID was discovered.	This is normal upon startup of Gateways.
Core-6259-27: Unicast message arrived at Gateway from Local Domain via direct path. Source: s:u	A Unicast Message arrived at a Gateway destined for the local Domain.	A user has likely unicast a message directly to the Gateway. The user needs to Unicast the message to the final application. UMS will take care of the routing.
Core-6259-28: Unicast message arrived from Remote Domain (u) via direct path. Source: s:u	A Unicast Message arrived with the destination domain different that the local domain (unicast direct).	A user has likely unicast a message directly to an application in a different domain. If this is desired, either specify a zero Domain ID or don't supply a Domain ID. Using the local Domain ID will not suffice.
Core-6259-29: Unicast message arrived at Gateway from Local Domain via direct path. Source: s:u	A Unicast Message arrived at a Gateway destined for the local Domain.	A user has likely unicast a message directly to the Gateway. The user needs to Unicast the message to the final application. UMS will take care of the routing.
Core-6259-2: Route discovered to Domain ID u through s:d	A new route to the given Domain ID was discovered.	This is normal upon startup of Gateways.
Core-6259-30: Unicast message arrived from Remote Domain (u) via direct path. Source: s:u	A Unicast Message arrived with the destination domain different that the local domain (unicast direct).	A user has likely unicast a message directly to an application in a different domain. If this is desired, either specify a zero Domain ID or don't supply a Domain ID. Using the local Domain ID will not suffice.
Core-6259-3: LBMC DESTINAT↩ ION header size incorrect. Dropping. Origin: s:d.	Destination message header contains incorrect size.	Check source (IP:Port) for possible version mismatch or service attack.
Core-6259-4: LBMC DESTINAT↩ ION header size incorrect. Dropping. Origin: s:d.	Destination message header contains incorrect size.	Check source (IP:Port) for possible version mismatch or service attack.
Core-6259-6: LBMR Domain ID option invalid len [u]. Dropping packet. Origin: s:d	LBMR Data received contain invalid data.	Check the source (IP:Port) for possible version mismatch or service attack.
Core-6259-7: Domain ID discovered via s:d; context resides in Domain ID u.	Log message indicates a Domain ID discovery.	This is not an error.

Core-6259-8: LBMR Domain ID option contains a mismatched domain [u:u]. Dropping packet. Origin: s:d	LBMR Data received contain invalid data.	Check the source (IP:Port) for possible version mismatch or service attack.
Core-6259-9: LBMR Topic Resolution Remote Domain Route packet malformed (d:d). Dropping. Origin: s:d	LBMR Data received contain invalid data.	Check the source (IP:Port) for possible version mismatch or service attack.
Core-6322-10: ULB receiver index reserve command response for unknown receiver.	UMS received a ULB receiver index reserve command response for an unknown receiver. This is not a serious problem but indicates that there is a mismatch between this process and another.	Check the system for other abnormal behavior, such as applications restarting.
Core-6322-11: ULB index command response error for unknown receiver.	UMS received a ULB index command response error for an unknown receiver. This is not a serious problem but indicates that there is a mismatch between this process and another.	Check the system for other abnormal behavior, such as applications restarting.
Core-6322-12: ULB index stop assignment command for unknown source.	UMS received a ULB index stop assignment command for an unknown source. This is not a serious problem but indicates that there is a mismatch between this process and another.	Check the system for other abnormal behavior, such as applications restarting.
Core-6322-13: ULB index start assignment command for unknown source.	UMS received a ULB index start assignment command for an unknown source. This is not a serious problem but indicates that there is a mismatch between this process and another.	Check the system for other abnormal behavior, such as applications restarting.
Core-6322-14: ULB index release command for unknown source.	UMS received a ULB index release command for an unknown source. This is not a serious problem but indicates that there is a mismatch between this process and another.	Check the system for other abnormal behavior, such as applications restarting.
Core-6322-15: ULB index reserve command for unknown source.	UMS received a ULB index reserve command for an unknown source. This is not a serious problem but indicates that there is a mismatch between this process and another.	Check the system for other abnormal behavior, such as applications restarting.
Core-6322-16: received ULB receiver registration error response for unknown receiver.	UMS received a ULB receiver registration error response, but did not register as a ULB receiver. This is not a serious problem but indicates that there is a mismatch between this process and another.	Check the system for other abnormal behavior, such as applications restarting.
Core-6322-17: received ULB receiver registration response for unknown receiver.	UMS received a ULB receiver registration response, but did not register as a ULB receiver. This is not a serious problem but indicates that there is a mismatch between this process and another.	Check the system for other abnormal behavior, such as applications restarting.

Core-6322-18: received ULB receiver de-registration response for unknown receiver.	UMS received a ULB receiver de-registration response, but did not register as a ULB receiver. This is not a serious problem but indicates that there is a mismatch between this process and another.	Check the system for other abnormal behavior, such as applications restarting.
Core-6322-19: received ULB RCR for unknown receiver.	UMS received a ULB RCR, but did not register as a ULB receiver. This is not a serious problem but indicates that there is a mismatch between this process and another.	Check the system for other abnormal behavior, such as applications restarting.
Core-6322-1: received liveness keepalive for unknown source.	UMS received a liveness keepalive for an unknown source. This is not a serious problem but indicates that there is a mismatch between this process and another. Check the system for other abnormal behaviour (applications restarting etc)	
Core-6322-20: received ULB unicast message for unknown receiver.	UMS received a ULB unicast message, but did not register as a U↩LB receiver. This is not a serious problem but indicates that there is a mismatch between this process and another.	Check the system for other abnormal behavior, such as applications restarting.
Core-6322-21: received UMQ command response for unknown command.	UMS received a UMQ command response for an unknown command. This is not a serious problem but indicates that there is a mismatch between this process and another. Check the system for other abnormal behaviour (applications restarting etc)	
Core-6322-22: received UMQ index command response for unknown command.	UMS received a UMQ index command response for an unknown command. This is not a serious problem but indicates that there is a mismatch between this process and another. Check the system for other abnormal behaviour (applications restarting etc)	
Core-6322-23: received UMQ registration response, but did not register with a queue.	UMS received a UMQ registration response, but did not register with a queue . This is not a serious problem but indicates that there is a mismatch between this process and another. Check the system for other abnormal behaviour (applications restarting etc)	
Core-6322-24: received UMQ stability ACK for unknown source.	UMS received a UMQ stability A↩CK for an unknown source . This is not a serious problem but indicates that there is a mismatch between this process and another. Check the system for other abnormal behaviour (applications restarting etc)	

Core-6322-25: received UMQ RCR for unknown receiver.	UMS received a UMQ RCR for an unknown receiver . This is not a serious problem but indicates that there is a mismatch between this process and another. Check the system for other abnormal behaviour (applications restarting etc)	
Core-6322-26: received UMQ keepalive for unknown client.	UMS received a UMQ keepalive for an unknown client . This is not a serious problem but indicates that there is a mismatch between this process and another. Check the system for other abnormal behaviour (applications restarting etc)	
Core-6322-27: received ACK for unknown source.	UMS received ACK for unknown source. This is not a serious problem but indicates that there is a mismatch between this process and another.	Check the system for other abnormal behavior, such as applications restarting.
Core-6322-2: received ULB receiver registration for unknown source.	UMS received a ULB receiver registration, but was not configured as a ULB source. This is not a serious problem but indicates that there is a mismatch between this process and another.	Check the system for other abnormal behavior, such as applications restarting.
Core-6322-3: received ULB receiver de-registration for unknown source.	UMS received a ULB receiver de-registration, but was not configured as a ULB source. This is not a serious problem but indicates that there is a mismatch between this process and another.	Check the system for other abnormal behavior, such as applications restarting.
Core-6322-4: received ULB receiver ACK for unknown source.	UMS received a ULB receiver A↩CK, but was not configured as a ULB source. This is not a serious problem but indicates that there is a mismatch between this process and another.	Check the system for other abnormal behavior, such as applications restarting.
Core-6322-5: received ULB RXR↩EQ for unknown source.	UMS received a ULB RXREQ, but was not configured as a U↩LB source. This is not a serious problem but indicates that there is a mismatch between this process and another.	Check the system for other abnormal behavior, such as applications restarting.
Core-6322-6: received ULB keepalive or keepalive response, but not using ULB	UMS received a ULB keepalive, but was not configured as a U↩LB source. This is not a serious problem but indicates that there is a mismatch between this process and another.	Check the system for other abnormal behavior, such as applications restarting.
Core-6322-7: ULB receiver index stop assignment command response for unknown receiver.	UMS received a ULB receiver index stop assignment command response for an unknown receiver. This is not a serious problem but indicates that there is a mismatch between this process and another.	Check the system for other abnormal behavior, such as applications restarting.

Core-6322-8: ULB receiver index start assignment command response for unknown receiver.	UMS received a ULB receiver index start assignment command response for an unknown receiver. This is not a serious problem but indicates that there is a mismatch between this process and another.	Check the system for other abnormal behavior, such as applications restarting.
Core-6322-9: ULB receiver index release command response for unknown receiver.	UMS received a ULB receiver index release command response for an unknown receiver. This is not a serious problem but indicates that there is a mismatch between this process and another.	Check the system for other abnormal behavior, such as applications restarting.
Core-6340-1: Malformed config opt option encountered. Dropping. Origin: s:d.	A malformed LBMC header was received.	Check the originating IP and port for an application sending incorrectly formed packets.
Core-6340-2: Malformed config opt option encountered. Dropping. Origin: s:d.	A malformed LBMC header was received.	Check the originating IP and port for an application sending incorrectly formed packets.
Core-6340-3: Malformed config opt option encountered. Dropping. Origin: s:d.	A malformed LBMC header was received.	Check the originating IP and port for an application sending incorrectly formed packets.
Core-6340-4: Malformed config opt option encountered. Dropping. Origin: s:d.	A malformed LBMC header was received.	Check the originating IP and port for an application sending incorrectly formed packets.
Core-6361-125: received sri request for unknown source.	A context without a resolver module has received an SRI REQ.	This could be caused if a transport thread's is reusing a previous context's request port
Core-6361-126: received sri request for unknown source - transport_idx:topic_idx [u:u]	The context has handled an SRI request for an unknown source. This is not a serious problem but indicates that there is a mismatch between this process and another. This is typically caused by a UMP receiver attempting to join a transport for a UMP source that has been deleted.	This can happen under normal situations and should cease after sri request configuration. If they don't, check the system for other abnormal behavior (applications restarting etc)
Core-6361-127: LBMC CNTL SRI REQ header size incorrect. Dropping. Origin: s:d.	Source Registration Information Request message header contains incorrect size.	Check source (IP:Port) for possible version mismatch or service attack.
Core-6361-128: LBMC CNTL SRI header size incorrect. Dropping. Origin: s:d.	Source Registration Information message header contains incorrect size.	Check source (IP:Port) for possible version mismatch or service attack.
Core-6361-129: LBMC CNTL UME store domain header size incorrect. Dropping. Origin: s:d.	Store Domain message header contains incorrect size.	Check source (IP:Port) for possible version mismatch or service attack.
Core-6361-130: LBMR Topic Info Record EXFUNC Option not correct size. Dropping remainder.	UM encountered a mismatch in the length of a received message and its headers, determining the rest of the message to be invalid. The remainder of the message is dropped.	Contact Informatica support if this message occurs frequently.
Core-6361-2: Topic Advertisement [s] contains EXFUNC Info from s but port is set to zero. Ignoring invalid EXFUNC Info.	A Topic Advertisement was received with EXFUNC Information but the source port was zero. The EXFUNC Information is being ignored.	This occurs when the Source disables binding of the request port. See request_tcp_bind_request_port configuration option.

Core-6361-3: late join available, but no OTID present	UM has encountered a source with late join enabled, but that has no OTID. This is likely caused by a version mismatch with an old version of UM.	Resolve the version mismatch.
Core-6361-4: OTID version mismatch - unable to provide late join	UM has encountered a source with a mismatched OTID version. This is likely caused by a UM version mismatch.	Resolve the version mismatch.
Core-6420-10: LBMC header data too long, dropping message. Origin: s:d	Parsing data past the end of the valid buffer.	Check the received message for possible wrong format or service attack.
Core-6420-11: LBMC header data too long. Dropping. Origin: s:d.	Parsing data past the end of the valid buffer	Check the received control message for possible wrong format or service attack.
Core-6420-12: LBMC basic header too short. Dropping. Origin: s:d.	Message header is less than the minimum size of LBMC header	Check the data being parsed for possbile wrong formats or service attack.
Core-6420-13: LBMC header data too long. Dropping. Origin: s:d.	Parsing data past the end of the valid buffer.	Check the received message for possible wrong format or service attack.
Core-6452-0: LBMC tid header size incorrect. Dropping. Origin↩ : s:d.	The size of the TID header is incorrect.	This is an internal error.
Core-6488-1: WARNING: UMQ queue "%s" context reg ID 0xx, session ID 0xx queue state ignored	The source application context has a higher last-sent timestamp than the queue reports at registration; this usually means the queue missed a few messages the source sent either by being down or being too busy, etc., and is behind when the source application re-registers.	Check to see if the queue has failed or been restarted during operation, or if it is being reported as inactive for periods of time due to network problems, etc.
Core-6675-1: non-UMQ context received unicast UMQ message.	A context received a UMQ message (unicast immediate message or control message), but was not a UMQ context. This is not a serious problem and normally indicates a non-UMQ context has re-used a request port recently held by a UMQ context.	Check for frequent application restarts or other behavior that could cause ports to be re-used between different types of applications.
Core-6720-1: IPC Error: Creating Receiver Monitor Mutex (d) (s)	An IPC receiver could not create a shared monitoring Mutex. This could be caused by a permission error or the resource already exists. Please refer to the OS error number and resource name given.	
Core-6758-1: LBMC dropping packet containing deprecated PSER header. Origin: s:d	A packet containing a UME proxy source election record (PSER) was dropped because their use has been deprecated.	This indicates umestored processes of an older version are attempting to elect a proxy source on this topic resolution domain.
Core-6758-2: LBMC proxy election token header size incorrect. Dropping. Origin: s:d.	An LBMC proxy source election token was received from the specified Origin that contained the wrong length. The entire packet was dropped.	This is caused by malformed or forged packets. Use the Origin to detect where they are coming from to investigate further.

Core-6758-3: LBMR dropping packet containing deprecated proxy source election header. Origin: s:d	LBM resolver has dropped a deprecated proxy source election packet. Reported only once per resolver.	Indicates previous versions of the UME store hosting proxy elections on the shared topic resolution address, a possible misconfiguration.
Core-6759-10: Updated destination for remote context name 's'. New destination: DomainID u addr s:d	An informational message indicating an updated destination has been detected for a context name used by this application.	This message is issued every time a named context (E.g. a UMP store daemon) changes the DomainID, IP, and port for which it resolves to. Repeated occurances of this log message for the same context name may indicate that multiple contexts are assigned the same name and active at the same time, which is a mis-configuration. If this occurs, please ensure that context name usage is unique across all UM topic resolution domains.
Core-6759-11: Duplicate context name 's' detected. Origin↩ : DomainID u addr s:d	A named context has detected another context advertising the same name.	Advertised context names (E.↩ g. store names) must be unique across topic resolution domains. Check the configuration to ensure only one store or named context with a given name is operational at any given time. The UM DomainID, IP address, and port of the advertised duplicate context name are given.
Core-6759-1: LBMR RCTXIN↩ FO packet malformed. Dropping. Origin: s:d	An LBMR packet was droppped because it could not be parsed.	Investigate the listed IP and port for an application generating spurious traffic.
Core-6759-2: LBMR RCTXINFO len malformed. Dropping. Origin: s:d	An LBMR packet was droppped because it could not be parsed.	Investigate the listed IP and port for an application generating spurious traffic.
Core-6759-31: Error parsing LB↩ MR RCTXINFO header flags x. Ignoring. Origin: s:d	An LBMR RCTXINFO packet header was ignored because it could not be parsed, or the application failed to allocate memory.	Investigate the listed IP and port for an application generating spurious traffic.
Core-6759-3: LBMR RCTXINFO rec len malformed. Dropping. Origin: s:d	An LBMR packet was droppped because it could not be parsed.	Investigate the listed IP and port for an application generating spurious traffic.
Core-6759-4: LBMR RCTXINFO address opt malformed. Dropping. Origin: s:d	An LBMR packet was droppped because it could not be parsed.	Investigate the listed IP and port for an application generating spurious traffic.
Core-6759-5: LBMR RCTXINFO instance opt malformed. Dropping. Origin: s:d	An LBMR packet was droppped because it could not be parsed.	Investigate the listed IP and port for an application generating spurious traffic.
Core-6759-6: LBMR RCTXINFO odomain opt malformed. Dropping. Origin: s:d	An LBMR packet was droppped because it could not be parsed.	Investigate the listed IP and port for an application generating spurious traffic.
Core-6759-7: LBMR RCTXINFO name opt malformed. Dropping. Origin: s:d	An LBMR packet was droppped because it could not be parsed.	Investigate the listed IP and port for an application generating spurious traffic.
Core-6759-8: LBMR RCTXINFO unknown opt 0x%02x. Dropping. Origin: s:d	An LBMR packet was droppped because it could not be parsed.	Investigate the listed IP and port for an application generating spurious traffic.

Core-6759-9: Updated destination for remote context name 's'. New destination: DomainID u addr s:d	An informational message indicating an updated destination has been detected for a context name used by this application.	This message is issued every time a named context (E.g. a UMP store daemon) changes the DomainID, IP, and port for which it resolves to. Repeated occurances of this log message for the same context name may indicate that multiple contexts are assigned the same name and active at the same time, which is a mis-configuration. If this occurs, please ensure that context name usage is unique across all UM topic resolution domains.
Core-6837-1: LBMC Route Info header size incorrect. Dropping. Origin: s:d.	Route Info message header contains incorrect size.	Check source (IP:Port) for possible version mismatch or service attack.
Core-6856-0001: LBMC CNTL U↩ME EXT store header size incorrect. Dropping. Origin: s:d.	Header length for a data type↩: lbmc_cntl_ume_store_ext_hdr_↩t is not right	The packet might have been corrupted. Please contact customer support
Core-6937-10: LBMC CNTL TCP SID header size incorrect. Dropping. Origin: s:d.	An LBMC Session ID control message for a TCP transport is the wrong size.	The IP address and port indicate the source of the erroneous traffic.
Core-6937-30: FD Register error when sending of Session ID; validation skipped (p)(0xx).	FD Register error when sending TCP Session ID to source for validation (transport_tcp_use↩_session_id enabled).	There is no immediate action. Validation is not required. If the error persists, however, check the system socket defaults.
Core-6937-31: Buffer allocation failure when sending Session ID (p)(0xx).	Buffer allocation error when sending TCP Session ID to source for validation (transport_tcp_use↩_session_id enabled).	A buffer allocation error usually is a symptom of running out of memory.
Core-6937-32: Topic Receiver sent message data on TCP connection. Ignoring. Origin: s:d	A TCP source received a data message from a client. This was unexpected.	Refer to the clients IP:Port for the source of the message
Core-6937-33: Topic Receiver sent invalid control message on TCP connection. Ignoring. Origin: s:d	A TCP source received a control message from a client that did not contain the expected information.	Refer to the clients IP:Port for the source of the message
Core-6938-1: Notice from src (R↩ID:u: (s)): store u:s:u reports it has not received SRI (but might have received TIR). Possible misconfiguration?	The UMP store has not yet received an SRI from this source, though it might have received a TIR. UMP registration sometimes occurs faster than topic resolution. This warning might occur during a store failover. This warning can also occur if the store is not configured to listen to the correct topic resolution channel.	If this warning persists, check the source initial delay and store configuration options.
Core-6959-1: INFO: Receiver on topic "%s" has its use_late_join option disabled but has a persistent source on transport s. To opt out of Late Join when subscribing to persistent sources, the ume_use_↩store option also must be disabled. Enabling use_late_join.	Receiver disabled late join with U↩MP.	Disabling late join with UMP is not allowed, so enable late join or disable ume_use_store to avoid this INFO message.

Core-6974-1: LBMC CTXINS↩TS header received without corresponding UME_STORE or UME↩_STORE_EXT header. Dropping. Origin: s:d.	A malformed LBMC packet was received.	Check the originating IP and port for applications sending malformed data.
Core-6974-2: LBMC STORENA↩ME header received without corresponding UME_STORE or UME↩_STORE_EXT header. Dropping. Origin: s:d.	A malformed LBMC packet was received.	Check the originating IP and port for applications sending malformed data.
Core-6976-103: WARNING: L↩BT-SMX session exists and uses a different transport_lbtsmx↩_datagram_max_size [d] than requested [d].	Once a source has created a transport session a subsequent source joining the same transport session cannot configure a different transport_lbtsmx_datagram_↩max_size setting. Please refer to UMS Objects section of the Design Concepts in the documentation.	
Core-6976-104: WARNING: LB↩T-SMX session exists and uses a different transport_lbtsmx_sm_↩interval [d] than requested [d].	Once a source has created a transport session a subsequent source joining the same transport session cannot configure a different transport_lbtipc_sm_interval setting. Please refer to UMS Objects section of the Design Concepts in the documentation.	
Core-6976-105: WARNING: L↩BT-SMX session exists and uses a different transport_lbtsmx_↩transmission_window_size [d] than requested [d].	Once a source has created a transport session a subsequent source joining the same transport session cannot configure a different transport_lbtsmx_↩transmission_window_size setting. Please refer to UMS Objects section of the Design Concepts in the documentation.	
Core-6976-106: WARNING: L↩BT-SMX session exists and uses a different transport_lbtsmx_↩maximum_receivers_per_transport [d] than requested [d].	Once a source has created a transport session a subsequent source joining the same transport session cannot configure a different transport_lbtsmx_maximum_↩receivers_per_transport setting. Please refer to UMS Objects section of the Design Concepts in the documentation.	
Core-6976-10: NOTICE: LBT-SMX transport does not support adaptive batching; option will be ignored.	The LBT-SMX transport does not support adaptive batching, but the user configured the source to use adaptive batching.	Do not configure an LBT-SMX source to use adaptive batching.
Core-6976-114: LBT-SMX Error↩: Joining transport; no more free receiver slots	The application tried joining a source's LBT-SMX transport session, but could not because no free receiver slots were available.	Check the transport_lbtsmx_↩maximum_receivers_per_transport config option setting on the source to see if it's large enough for the intended number of receivers. Also check for hung receiver clients.

Core-6976-117: LBTSMX receiver thread dropping receiver add with no matching transport	The LBT-SMX control source enqueued an add of a new receiver or receiver callback, but the LBT-↩ SMX receiver thread has no knowledge of the transport the receiver is supposed to be added too; either the transport was never correctly added or it was removed.	
Core-6976-118: LBTSMX receiver thread dropping receiver remove with no matching transport	The LBT-SMX control source enqueued a delete of a receiver or receiver callback, but the LBT-S↩ MX receiver thread has no knowledge of the transport the receiver is supposed to be removed from; either the transport was never correctly added or it was already removed.	
Core-6976-11: NOTICE: configured transport_lbtsmx_↩ transmission_window_size (u bytes) is not large enough to support at least two datagrams of the configured transport_lbtsmx↩ _datagram_max_size (u bytes). Transmission window size will be rounded up to u bytes.	The configured LBT-SMX transmission window size is not large enough to accommodate the configured the max datagram size. We are automatically bumping up the transmission window size from the configured size so that it is large enough.	The user should simply configure their datagram max size and transmission window sizes appropriately; the transmission window size must be a power of 2, and it must be at least twice the configured max datagram size.
Core-6976-120: LBT-SMX receiver thread received unknown message type 'u' from transport LBTSMX↩ _x_u. Further unknown message types received from this transport will not be reported.	The LBT-SMX receiver thread received a message type it does not understand.	Check for thread safety issues in the application with LBT-SMX-related API calls.
Core-6976-121: LBT-SMX receiver thread callback returned d	An internal LBT-SMX control callback function failed.	Something has likely gone terribly wrong; memory corruption, etc.
Core-6976-122: LBT-SMX: locking problem detected in lbtsmx_txw_↩ rcvr_node_alloc (d)	An error occurred with the shared object used to ensure mutual exclusion when accessing SMX shared resources. Please refer to the OS error number given.	
Core-6976-123: LBT-SMX: locking problem detected in lbtsmx_txw_↩ rcvr_node_alloc (d)	An error occurred with the shared object used to ensure mutual exclusion when accessing SMX shared resources. Please refer to the OS error number given.	
Core-6976-124: LBT-SMX: locking problem detected in lbtsmx_txw_↩ lock_rcvr_nodes (d)	An error occurred with the shared object used to ensure mutual exclusion when accessing SMX shared resources. Please refer to the OS error number given.	
Core-6976-125: LBT-SMX: locking problem detected in lbtsmx_txw_↩ lock_rcvr_nodes (d)	An error occurred with the shared object used to ensure mutual exclusion when accessing SMX shared resources. Please refer to the OS error number given.	

Core-6976-126: LBT-SMX: failed to open shared memory s (d)	The SMX shared memory region could not be opened for reading. This could occur if a receiver attempts to join an SMX transport after the source has been deleted. Please reference the OS error number given.	
Core-6976-127: LBT-SMX: failed to map shared memory s (d)	An error occurred trying to map a pointer to the SMX shared memory region. Please refer to the OS error number given.	
Core-6976-128: LBT-SMX: Transport Version Mismatch: Joining 0xx from version 0xx	The SMX shared memory region's version does not match our own; either the shared memory is corrupt or is not a version of LBT-SMX that we understand (it may be a newer or older version).	If different versions of the LBT-SMX transport have been used on the same machine, run their respective lbtsmx_resource_manager tools to reclaim and delete shared memory resources. Do not mix versions of LBT-SMX on the same machine.
Core-6976-129: LBT-SMX: failed to map shared memory s (d)	An error occurred trying to map a pointer to the SMX shared memory region. Please refer to the OS error number given.	
Core-6976-12: lbm_transport_↩ lbtsmx_ctlr_delete: WFSO res=d, GLE=d	The WaitForSingleObject() Windows call return an error while waiting for the SMX Receiver thread to exit. Refer to the response and OS error number given.	
Core-6976-130: LBT-SMX: can not open shared semaphore (d)	The shared semaphore used to ensure mutual exclusion while accessing SMX shared resources could not be opened. This could occur if a receiver attempts to join an SMX transport after the source has been deleted. Please refer to the OS error number given.	
Core-6976-131: LBT-SMX: failed to open shared memory s (d)	The SMX shared memory region could not be opened for reading. This could occur if a receiver attempts to join an SMX transport after the source has been deleted. Please reference the OS error number given.	
Core-6976-132: LBT-SMX: failed to map shared memory s (d)	An error occurred trying to map a pointer to the SMX shared memory region. Please refer to the OS error number given.	
Core-6976-133: LBT-SMX: Transport Version Mismatch: Joining 0xx from version 0xx	The SMX shared memory region's version does not match our own; either the shared memory is corrupt or is not a version of LBT-SMX that we understand (it may be a newer or older version).	If different versions of the LBT-SMX transport have been used on the same machine, run their respective lbtsmx_resource_manager tools to reclaim and delete shared memory resources. Do not mix versions of LBT-SMX on the same machine.
Core-6976-134: LBT-SMX: failed to map shared memory s (d)	An error occurred trying to map a pointer to the SMX shared memory region. Please refer to the OS error number given.	

Core-6976-135: LBT-SMX: can not open shared Mutex (d)	An error occurred trying to open the mutex that protects the LBT-↩ SMX shared memory region - see the OS error code for more information.	
Core-6976-136: LBT-SMX Error↩ : Getting Receiver Monitor Mutex (d)	The LBT-SMX monitor thread could not acquire the shared monitoring Mutex. This could be caused by a permission error. Refer to the OS error number and resource name given.	
Core-6976-137: SMX Error: Creating Receiver Monitor Mutex (d) (s)	An SMX receiver could not create a shared monitoring Mutex. This could be caused by a permission error or the resource already exists. Refer to the OS error number and resource name given.	
Core-6976-138: SMX Error: Creating Receiver Monitor Mutex (d) (s)	An SMX receiver could not create a shared monitoring Mutex. This could be caused by a permission error or the resource already exists. Refer to the OS error number and resource name given.	
Core-6976-139: Error: Creating Receiver Thread (d)	An error occurred when the receiver attempted to create a thread for internal processing. Refer to the OS error number given.	
Core-6976-13: LBTSMX: error in sizing resource registry (d)	An error occurred when attempting to set shared memory registry file to the correct size. The registry is used to store SMX shared objects that are in use. The OS error number is given.	
Core-6976-140: LBT-SMX Error↩ : Joining transport; no more free receiver slots	An SMX receiver is attempting to join an SMX transport that has no more free slots for receivers.	Adjust the "transport_lbtsmx↩ _maximum_receivers_per_↩ transport" configuration attribute.
Core-6976-141: default thread stack size is perhaps too small, u bytes.	The LBT-SMX receiver has created a thread for internal processing and the default stack size is too small. The size of the default stack size is dumped and will then be set to a larger size automatically.	
Core-6976-142: reset thread stack size to u bytes.	The SMX receiver has created a thread for internal processing and the default stack size is too small and is reallocated. This message reports the new size of the stack.	
Core-6976-143: Error: Creating Receiver Thread (d)	An error occurred when the S↩ MX receiver attempted to create a thread for internal processing. Refer to the OS error number given.	
Core-6976-144: LBT-SMX Error↩ : Joining transport; no more free receiver slots	An SMX receiver is attempting to join an SMX transport that has no more free slots for receivers.	Adjust the "transport_lbtsmx↩ _maximum_receivers_per_↩ transport" configuration attribute.

Core-6976-145: SMX Error: Creating Receiver Monitor Semaphore	An error occurred when an SMX receiver attempted to allocate a shared monitoring semaphore. This could be caused by a permission error or no more resources. Refer to the documentation for lbtsmx_resource_manager.	
Core-6976-146: SMX Error: Initializing Receiver Monitor Semaphore (d)	An error occurred when an SMX receiver attempted to initialize a shared monitoring semaphore. Refer to the OS error number given.	
Core-6976-147: SMX Error: Initializing Receiver Monitor Semaphore (d)	An error occurred when an SMX receiver attempted to initialize a shared monitoring semaphore. Refer to the OS error number given.	
Core-6976-148: LBT-SMX Problem Opening Signal Semaphore (d)	The SMX source has received a connection request from an SMX receiver and has failed to open the shared signaling semaphore. This could happen if the connection request is old and the receiver was already deleted or the source does not have permission to open the object. Please reference the OS error number given.	
Core-6976-149: LBT-SMX Problem Opening Event (d)	The SMX source has received a connection request from an SMX receiver and has failed to open the shared Event. This could happen if the connection request is old and the receiver was already deleted or the source does not have permission to open the object. Please reference the OS error number given.	
Core-6976-14: LBTSMX: error mapping (initial) resource registry (d)	An error occurred when attempting to map memory to the registry file. The registry is used to store SMX shared objects that are in use. The OS error number is given.	
Core-6976-150: LBT-SMX Problem Opening Monitor Semaphore (d)	The SMX source has received a connection request from an SMX receiver but has failed to open the Monitoring Semaphore. This could happen if the connection request is old and the receiver was already deleted or the source does not have permission to open the object. Please reference the OS error number given.	

Core-6976-151: LBT-SMX Problem Opening Monitor Mutex (d) (s)	The SMX source has received a connection request from an SMX receiver but has failed to open the Monitoring Mutex. This could happen if the connection request is old and the receiver was already deleted or the source does not have permission to open the object. Please reference the OS error number and object name given.	
Core-6976-15: LBTSMX: error creating registry semaphore (d)	The semaphore used to ensure mutual exclusion while accessing the registry could not be initialized. The registry is used to store SMX shared objects that are in use. Refer to the documentation for lbtsmx_resource_manager.	
Core-6976-160: lbm_transport_↩ lbtsmx_ctlr_delete: WFSO res=d, GLE=d	The WaitForSingleObject() Windows call return an error while waiting for the SMX Receiver thread to exit. Refer to the response and OS error number given.	
Core-6976-161: Could not create LBT-SMX control source; will not be able to join any LBT-S↩ MX transports. Check permissions and reclaim any stale LBT-SMX resources.	The LBT-SMX internal control source could not be created; this probably means the user doesn't have permissions to create shared mutexes or semaphores, or we have run out of memory, or we have run out of our allowed number of semaphores.	Try running lbtsmx_resource↩ _manager -reclaim to get rid of stale shared resources, and check permissions of the application to see if it is allowed to create shared mutexes, etc.
Core-6976-162: lbm_lbtsmx_↩ block_wait failed	Waiting for the LBT-SMX receiver thread to complete an action failed; the receiver thread may or may not have completed the action. The application may potentially now be in an unstable state. This may be due to being out of memory or out of available semaphores.	Contact Informatica support.
Core-6976-163: lbm_lbtsmx_↩ block_wait failed	Waiting for the LBT-SMX receiver thread to complete an action failed; the receiver thread may or may not have completed the action. The application may potentially now be in an unstable state. This is usually due to being out of memory or out of available semaphores and should normally not happen.	Contact Informatica support.
Core-6976-164: lbm_lbtsmx_↩ block_wait failed	Waiting for the LBT-SMX receiver thread to complete an action failed; the receiver thread may or may not have completed the action. The application may potentially now be in an unstable state. This is usually due to being out of memory or out of available semaphores and should normally not happen.	Contact Informatica support.

Core-6976-165: lbm_lbtsmx_↩ block_wait failed	Waiting for the LBT-SMX receiver thread to complete an action failed; the receiver thread may or may not have completed the action. The application may potentially now be in an unstable state. This is usually due to being out of memory or out of available semaphores and should normally not happen.	Contact Informatica support.
Core-6976-166: lbm_lbtsmx_↩ block_wait failed	Waiting for the LBT-SMX receiver thread to complete an action failed; the receiver thread may or may not have completed the action. The application may potentially now be in an unstable state. This is usually due to being out of memory or out of available semaphores and should normally not happen.	Contact Informatica support.
Core-6976-167: lbm_lbtsmx_↩ block_wait failed	Waiting for the LBT-SMX receiver thread to complete an action failed; the receiver thread may or may not have completed the action. The application may potentially now be in an unstable state. This is usually due to being out of memory or out of available semaphores and should normally not happen.	Contact Informatica support.
Core-6976-16: LBTSMX: error initializing registry semaphore (d)	The semaphore used to ensure mutual exclusion while accessing the registry could not be initialized. The registry is used to store SMX shared objects that are in use. Refer to the documentation for lbtsmx_resource_manager.	
Core-6976-17: LBTSMX: error opening resource registry (d)	An error occurred when attempting to open or map memory to the registry file. The OS error number is given.	
Core-6976-18: LBTSMX: error mapping resource registry (d)	An error occurred when attempting to open or map memory to the registry file. The OS error number is given.	
Core-6976-19: LBTSMX: resource registry version mismatch: use lbtsmx_resource_manager to clean-up and delete registry.	An SMX registry file existed, and contained the wrong version.	For this to happen, a registry file with incorrect version information would have to be deliberately put in place. 3.5 and post3.5 use different naming schemes for registries, so this can't happen due to version mismatch.
Core-6976-20: LBTSMX: error re-mapping resource registry (entries: d) (d)	An error occurred when attempting to re-map memory to the registry file. The registry is used to store SMX shared objects that are in use. The size in entries and OS error number is given.	

Core-6976-21: LBTSMX: error opening/recreating registry semaphore (d)	The semaphore used to ensure mutual exclusion while accessing the registry could not be created. The registry is used to store SMX shared objects that are in use. The OS error number is given.	
Core-6976-22: LBTSMX: error reinitializing registry semaphore (d)	The semaphore used to ensure mutual exclusion while accessing the registry could not be initialized. The registry is used to store SMX shared objects that are in use. The OS error number is given.	
Core-6976-23: LBTSMX: error recreating resource registry (d)	The registry used to store SMX shared objects that are in use could not be created. The OS error number is given.	
Core-6976-24: LBTSMX: error in re-sizing resource registry (d)	The registry used to store SMX shared objects that are in use could not be re-sized (expanded). The OS error number is given.	
Core-6976-25: LBTSMX: error remapping resource registry (d)	An error occurred when attempting to re-map memory to the registry file (file expansion). The registry is used to store SMX shared objects that are in use. The OS error number is given.	
Core-6976-26: LBTSMX: No free semaphores could be found	A free semaphore required for the LBT-SMX transport could not be found.	See the Ultra Messaging Configuration Guide for information about the lbtsmx_resource_manager option.
Core-6976-27: LBTSMX: error creating registry semaphore (d)	An error occurred when attempting to create the LBT-SMX registry semaphore set. The OS error number is given.	
Core-6976-28: LBTSMX: error opening semaphore (d)	A free semaphore allocated for the LBT-SMX transport could not be opened. The OS error number is given.	
Core-6976-29: LBTSMX: error freeing semaphore; key 0xx not found	A semaphore allocated for the LB↩T-SMX transport could not be freed due to an invalid internal key.	Contact Informatica support.
Core-6976-32: specified transport_lbtsmx_transmission_↩window_size of u will be ignored in favor of the next highest power of two: u	LBT-SMX transmission window size must be a power of 2; the user specified a non-power-of-2 size.	
Core-6976-6: NOTICE: LBT-SMX transport does not support UMP; option will be ignored.	The LBT-SMX transport does not support UMP, but the user configured the source as a UMP source.	Do not configure an LBT-SMX source to use UMP.
Core-6976-7: NOTICE: LBT-SMX transport does not support ULB; option will be ignored.	The LBT-SMX transport does not support ULB, but the user configured the source as a ULB source.	Do not configure an LBT-SMX source to use ULB.

Core-6976-84: an error occurred while canceling source buffers - possibly due to non thread-safe use of lbm_src_buffs_cancel; LBT-SMX shared memory may be in an inconsistent state	The user probably called a series of non-thread-safe buffer-based send API functions concurrently.	Code testing for race conditions & code inspection is advised.
Core-6976-8: NOTICE: LBT-SMX transport does not support UMQ; option will be ignored.	The LBT-SMX transport does not support UMQ, but the user configured the source as a UMQ source.	Do not configure an LBT-SMX source to use UMQ.
Core-6976-9: NOTICE: LBT-SMX transport does not support late join; option will be ignored.	The LBT-SMX transport does not support late join, but the user configured the source to use late join.	Do not configure an LBT-SMX source to use late join.
Core-7007-1: LBMC encountered more than 2 Destination headers. Origin: s:d.	Discovered too many duplicate L↩BMC Destination headers in the same packet. This should be harmless, but indicates an error in packet handling elsewhere.	Contact Informatica support.
Core-7007-2: LBMC encountered more than 2 Stream headers. Origin: s:d.	Discovered too many duplicate L↩BMC Stream headers in the same packet. This should be harmless, but indicates an error in packet handling elsewhere.	Contact Informatica support.
Core-7049-1: NOTICE: Initiating proactive retransmissions for UME source on topic "%s" starting at sequence number 0xx.	Proactive retransmissions are enabled and are being sent for a given source.	This probably means either stability ACKs from a store are not reaching the source application or the source's messages are not reaching the store. In either case, causes of loss or connectivity issues in each direction between the source and the store should be investigated.
Core-7144-1: WARNING: could not set unicast SO_SNDBUF to requested value u	An error was returned from the OS while trying to set the socket option SO_SNDBUF. The requested buffer size has not been set.	
Core-7144-2: INFO: unicast rcv could only get SO_SNDBUF u (desired u)	An error was returned from the OS while trying to set the socket option SO_SNDBUF. The buffer size that was set is shown in the log message. Typically the OS will allocate the requested value or its configured maximum, whichever is smaller.	Increase the maximum send buffer size allowed by your OS. Refer to the configuration guide for instructions about changing the OS limits.
Core-7275-1: INFO: received PR↩EG RESP that was not a deregistration response while the receiver is in the deregistering state	A registration response message that does not have the flag set to deregister was received from a store, but the source is in the deregistration state.	Client deregistered before all stores were fully registered with. This is a benign issue because messages could have crossed on the wire
Core-7322-1: lbm_unicast_↩message_buff() failed to reallocate message buffer to include additional headers (p:p:p)	When sending a unicast message buffer, a buffer could not be reallocated to include additional information.	This is an LBM buffer create error. This is likely due to running out of memory.
Core-7421-1: Source Side Filtering Init message with no return IP, using transport IP (s)	The request_tcp_interface parameter was not configured on the source.	Configure the source to set request_tcp_interface.

Core-7427-1: received TSNI request for unknown source[u] from ip:port[s:d].	UMS received a TSNI request for unknown source. This is not a serious problem but indicates that there is a mismatch between this process and another.	Check the system for other abnormal behavior, such as applications restarting.
Core-7506-1: Delivery controller forced loss due to exceeding delivery_control_maximum_total↩ _map_entries.	The delivery controller forced loss, because it exceeded the maximum number of total map entries.	
Core-7506-2: Delivery controller forced loss during late join or OTR due to exceeding delivery↩ _control_maximum_total_map_↩ entries.	The delivery controller forced loss during late join or OTR, because it exceeded the maximum number of total map entries.	
Core-7521-7: Could not close LBT-SMX shared memory	Closing a shared transmission window failed; this likely indicates an internal error and should really never happen.	
Core-7582-2: DRO does not allow the LBT-SMX source transport to be configured; changing source transport to TCP. Topic (s)	The DRO does not support the LBT-SMX source transport. The source transport will automatically be changed to TCP.	The customer should use a different source transport when the D↩ RO is configured. Please reconfigure the source transport type.
Core-7699-2: Socket error setting SO_EXCLUSIVEADDRUSE: s	An error was returned from the OS while trying to set the SO_EXCL↩ USIVEADDRUSE (Windows Only) option on a socket.	Refer to the OS error number and message given to determine cause of the failure.
Core-7725-1: WARNING: LBT-S↩ MX source "%s" matches HFX receiver on topic "%s", but HFX receivers are not supported for LB↩ T-SMX transports. Messages from this source will not be delivered to any HFX receivers.	The LBT-SMX transport does not support HFX receivers, but the user has created an HFX receiver on a topic matching an SMX source.	
Core-7839-10: Callback service time stats for receiver topic "%s" are disabled because s	Callback service time stats are enabled for this context, however this receiver will not be included in those stats because an event queue is in use or MTT is enabled.	If callback timing stats are not desired for this receiver, this message can be ignored. If stats are desired and an event queue is in use, the event queue service time statistics can be used to monitor the receiver callback time. Callback service time stats are not currently supported with MTT receivers.
Core-7839-11: Callback service time stats for wildcard receiver pattern "%s" are disabled because s	Callback service time stats are enabled for this context, however this wildcard receiver will not be included in those stats because an event queue is in use or MTT is enabled.	If callback timing stats are not desired for this wildcard receiver, this message can be ignored. If stats are desired and an event queue is in use, the event queue service time statistics can be used to monitor the wildcard receiver callback time. Callback service time stats are not currently supported with MTT wildcard receivers.

Core-7839-12: Callback service time stats for wildcard receiver pattern "%s" are disabled because s	Callback service time stats are enabled for this context, however this wildcard receiver will not be included in those stats because an event queue is in use or MTT is enabled.	If callback timing stats are not desired for this wildcard receiver, this message can be ignored. If stats are desired and an event queue is in use, the event queue service time statistics can be used to monitor the wildcard receiver callback time. Callback service time stats are not currently supported with MTT wildcard receivers.
Core-7839-17: [LBMMON] Format module receiver topic deserialize function returned d, s	A receiver topic statistics message was unable to be parsed.	Contact Informatica support.
Core-7839-18: [LBMMON] Format module wildcard receiver deserialize function returned d, s	A wildcard receiver statistics message was unable to be parsed.	Contact Informatica support.
Core-7839-31: failed to update monitoring Domain ID	Monitoring failure: could not update domain id.	This is an internal error and is usually caused by running out of memory.
Core-7839-33: failed to remove source monitoring	Failure to unmonitor a source.	This is an internal error and is usually caused by running out of memory.
Core-7839-34: [LBMMON] Error d returned from transport module send function, s	Failed to send a receiver topic statistics packet.	Contact Informatica support.
Core-7839-35: [LBMMON] Error d returned from format module receiver topic serialize function, s	Failed to format a receiver topic statistics packet.	Contact Informatica support.
Core-7839-36: [LBMMON] Error d returned from transport module send function, s	Failed to send a wildcard receiver statistics packet.	Contact Informatica support.
Core-7839-37: [LBMMON] Error d returned from format module wildcard receiver serialize function, s	Failed to format a wildcard receiver statistics packet.	Contact Informatica support.
Core-7839-8: Callback service time stats for hot failover receiver topic "%s" are disabled because s	Callback service time stats are enabled for this context, however this hot failover receiver will not be included in those stats because an event queue is in use or MTT is enabled.	If callback timing stats are not desired for this hot failover receiver, this message can be ignored. If stats are desired and an event queue is in use, the event queue service time statistics can be used to monitor the receiver callback time. Callback service time stats are not currently supported with MTT hot failover receivers.
Core-7839-9: Callback service time stats for receiver topic "%s" are disabled because s	Callback service time stats are enabled for this context, however this receiver will not be included in those stats because an event queue is in use or MTT is enabled.	If callback timing stats are not desired for this receiver, this message can be ignored. If stats are desired and an event queue is in use, the event queue service time statistics can be used to monitor the receiver callback time. Callback service time stats are not currently supported with MTT receivers.

Core-7911-1: Onload extensions API has been dynamically loaded	The Onload library (libonload.so) was found in the library path and has been loaded. This library is required to selectively accelerate transport sockets via onload_set↩ _stackname.	If you do not wish to use this feature or automatically load the library, export LBM_SUPPRESS_↩ ONLOAD=1.
Core-7911-2: [errno:d] Error calling onload_set_stackname	There was an error setting the onload stack name.	Refer to the Solarflare Onload documentation for onload_set_↩ stackname with the given errno.
Core-7911-3: Attempting to set Onload Stackname, but Onload is not available	A source or receiver has set onload_acceleration_stack_↩ name but the Onload library was not dynamically loaded by Ultra Messaging.	If you don't want onload acceleration, ensure that onload_↩ acceleration_stack_name is NU↩ LL. If you do, ensure that the envrionment variable LBM_SUPPR↩ ESS_ONLOAD is unset and that the Onload library is in your library path.
Core-8034-1: [LBMMON] Dropping monitoring message that is larger than the maximum allowed size of lu (size=lu)	The monitoring message received is larger than the maximum allowed size given.	This is a hard coded maximum.
Core-8034-2: [LBMMON] Dropping monitoring message that is larger than the maximum allowed size of d (size=d)	The monitoring message received is larger than the maximum allowed size given.	This is a hard coded maximum.
Core-8034-3: [LBMMON] Dropping monitoring message that is larger than the maximum allowed size of d (size=d)	The monitoring message received is larger than the maximum allowed size given.	This is a hard coded maximum.
Core-8192-4: WARNING: UME non-blocking receiver "%s" RegID u attempted to register with a store that does not support non-blocking receivers; receiver was converted to a blocking receiver registration.	The attempt to register with the store as a non-blocking receiver was converted to a blocking receiver registration.	Upgrade the store to a post 6.8 release.
Core-8243-10: unknown message type (d) present in message bundle	An unhandled message type was placed in a message bundle for delivery; this is an internal error that indicates a serious problem.	Contact Informatica support.
Core-8243-12: message receiver function returned -1	The user's receiver callback returned -1, indicating an error.	User should check their receiver callback for possible error returns.
Core-8243-13: rcv batching callback returned error u [s]	An error ocurred while processing a batch of messages. This may be due to an out-of-memory condition.	Contact Informatica support.
Core-8243-15: Multi-threaded transports (MTT) are not currently compatible with receive-side batching; receive-side batching will be disabled for receivers configured to use MTT.	The user configured both MTT and receive-side batching, which do not currently work together.	Do not enable both MTT and receive-side batching for the same receiver.
Core-8243-16: unknown message type (d) present in message bundle	An unhandled message type was placed in a message bundle for delivery; this is an internal error that should not happen and indicates a serious problem.	Contact Informatica support.

Core-8243-17: rcv batching event queue enqueue returned error u [s]	An error ocurred while enqueueing a batch of messages. This may be due to an out-of-memory condition.	Contact Informatica support.
Core-8243-18: lbm_context_↩ deliver_waiting_bundles returned error u [s]	Internal handling of message bundles failed. This indicates a severe problem (out of memory, etc.).	Contact Informatica support.
Core-8243-19: lbm_context_↩ deliver_waiting_bundles returned error u [s]	Internal handling of message bundles failed. This indicates a severe problem (out of memory, etc.).	Contact Informatica support.
Core-8243-20: lbm_context_↩ deliver_waiting_bundles returned error u [s]	Internal handling of message bundles failed. This likely indicates a severe problem (out of memory, etc.).	Contact Informatica support.
Core-8243-21: lbm_context_↩ deliver_waiting_bundles returned error u [s]	Internal handling of message bundles failed. This likely indicates a severe problem (out of memory, etc.).	Contact Informatica support.
Core-8243-22: lbm_context_↩ deliver_waiting_bundles returned error u [s]	Internal handling of message bundles failed. This likely indicates a severe problem (out of memory, etc.).	Contact Informatica support.
Core-8243-23: rcv batching event queue enqueue returned error u [s]	An error ocurred while enqueueing a batch of messages. This may be due to an out-of-memory condition.	Contact Informatica support.
Core-8243-40: semaphore_↩ timedwait failure	Waiting on a queue size semaphore failed; this probably means the size is incorrect.	Contact Informatica support.
Core-8243-9: message receiver function returned -1	The user's receiver callback returned -1, indicating an error.	User should check their receiver callback for possible error returns.
Core-8321-1: lbm_context_↩ deliver_waiting_bundles returned error u [s]	Internal handling of message bundles failed. This indicates a severe problem (out of memory, etc.).	Contact Informatica support.
Core-8321-2: lbm_context_↩ deliver_waiting_bundles returned error u [s]	Internal handling of message bundles failed. This indicates a severe problem (out of memory, etc.).	Contact Informatica support.
Core-8321-3: lbm_context_↩ deliver_waiting_bundles returned error u [s]	Internal handling of message bundles failed. This indicates a severe problem (out of memory, etc.).	Contact Informatica support.
Core-8321-4: lbm_context_↩ deliver_waiting_bundles returned error u [s]	Internal handling of message bundles failed. This indicates a severe problem (out of memory, etc.).	Contact Informatica support.
Core-8342-1: HFX receivers are not currently compatible with receive-side batching; receive-side batching will be disabled for all HFX receivers.	The user is creating an HFX receiver with receive-side batching turned on, which is not currently supported.	This is not really an error; if the user doesn't need receive-side batching for non-HFX receivers, suggest turning it off.
Core-8562-1: INFO: could not set SO_SNDBUF u for UDP socket	The desired socket send buffer could not be set on a UDP socket.	Check configured system limits or permissions to make sure the request socket buffer size is allowed.
Core-8562-2: INFO: could not set SO_SNDBUF u for UDP socket	The desired socket send buffer could not be set on a UDP socket.	Check configured system limits or permissions to make sure the request socket buffer size is allowed.
Core-8562-3: could not set SO_↩ SNDBUF u for UDP socket	The desired socket send buffer could not be set on a UDP socket.	Check configured system limits or permissions to make sure the request socket buffer size is allowed.

Core-8576-1: Reducing otr_↩ message_caching_threshold [u] to ume_application_outstanding_↩ maximum [u] for topic [s]	The OTR message caching threshold cannot be higher than the configured "ume_application_↩ outstanding_maximum".	Update the configuration (either increase ume_application_↩ outstanding_maximum or decrease otr_message_caching_↩ threshold so that otr_message↩ _caching_threshold <= ume↩ _application_outstanding_↩ maximum.
Core-8576-2: Throttled recovery is requested but OTR is disabled for topic [s]. Only initial recovery will be throttled.	Throttled recovery only works for receivers configured to use OTR.	Turn on OTR for the receiver, or turn off throttled recovery.
Core-8576-3: OTR enabled and otr message caching threshold is less than cache proximity. Reducing retransmit_message_caching↩ _proximity [u] to half of otr_↩ message_caching_threshold [u] for topic [s].	When OTR is enabled, cache proximity must be set to a smaller value than message caching threshold.	Set cache proximity less than message caching threshold
Core-8781-1: late join info destination index u is invalid, dropping	A Late Join Info message with an invalid destination index was received for an outstanding rx request. This indicates that ports may be re-used between application restarts. It may also indicate non-UM traffic is being directed at UM applications.	Try disabling tcp reuseaddr and/or segregating application request_↩ tcp_port ranges.
Core-8781-2: late join info low_↩ sqn u is invalid for loss rec sqn u, dropping	A Late Join Info message with an invalid sequence number was received for an outstanding rx request. This indicates that ports may be re-used between application restarts. It may also indicate non-UM traffic is being directed at UM applications.	Try disabling request_tcp_↩ reuseaddr and/or segregating application request_tcp_port ranges.
Core-8787-1: WARNING: could not set SO_KEEPALIVE on TCP connection socket: s	SO_KEEPALIVE was requested on the source end of TCP connection, but was not able to be set on the socket. This could be because the OS is not Windows or Linux, or because there was an error in the OS system call to set the socket options.	
Core-8787-7: Source TCP activity timeout set, but TCP keepalives are not supported on this platform; option will have no effect.	The source's transport_tcp_↩ activity_interval option is set, but SO_KEEPALIVE is not supported on this OS.	Don't set the transport_tcp_↩ activity_interval option on this OS.
Core-8787-8: Source TCP activity timeout set lower than minimum supported value; increasing to u milliseconds.	The source's configured transport_tcp_activity_interval option is lower than the minimum supported value on this OS.	Set the TCP activity interval option to a higher value.
Core-8840-3: Could not create automon controller: s	Automatic monitoring could not be turned on for a context.	Check automatic monitoring configuration for errors; if none are found, contact support.
Core-8901-01: BROKER: Failed to create a Proton library driver object.	Error in creating Proton Driver.	Call support.

Core-8901-02: BROKER: Failed to create a Proton library connector object (s:s).	Error in creating Proton Connector.	Call support.
Core-8901-03: BROKER: Disconnect detected while establishing broker connection (s:s).	A broker disconnect was detected.	Make sure the broker is running. If HA is used, a new active broker should be elected.
Core-8901-04: BROKER: Security failure (s:s).	Error in authorizing connection to broker.	Check permissions.
Core-8901-05: BROKER: No answer from broker (s:s).	Error in trying to connect to broker; no answer.	Check to make sure the broker daemon is running and that no errors have been reported by the broker.
Core-8913-10: Explicit ACK feature is not supported, disabling	Explicit Ack feature is turned on	Explicit Ack feature is not supported, and should be turned off.
Core-8913-1: NULL ptr [s:d]	Null pointer detected	Contact Informatica Support
Core-8913-8: INFO: Source "%s" Late join set, but source is configured as broker source. Turning off late join.	Late Join is turned on for broker source	Turn Off Late Join option
Core-8979-6: No activity from D↩RO domain id u for u seconds, disabling active domain id propagation	The DRO servicing the specified domain id has not been heard from for the given timeout, so the domain id will no longer be propagated to new applications in the Topic Resolution Domain.	Ensure all DROs are up and running and configured with the correct domain id for the Topic Resolution Domain.
Core-8979-7: Detected activity from DRO domain id u, enabling active domain id propagation	The DRO servicing the specified domain id has been heard from again, so the domain id will be propagated to new applications in the Topic Resolution Domain.	Ensure all DROs are up and running and configured with the correct domain id for the Topic Resolution Domain.
Core-9003-1: brokered contexts do not batch consumption reports.	The user configured "umq_↩delayed_consumption_report_↩interval" which is not supported on a brokered context.	The user should be informed of this limitation and set the configuration appropriately.
Core-9008-1: brokered contexts do not allow the use of transport threads, disabling	The user configured "use_↩transport_thread" which is not supported on a brokered context.	The user should be informed of this limitation and set the configuration appropriately.
Core-9012-01: BROKER: Encoding error; vendor private format found in message property: (s)	Customer has named a property using the LBM internal format.	Support needs to advise against using internal names. We will drop them.
Core-9012-02: BROKER: Decoding error; proton NULL type not handled; dropping (s)	LBM received an unhandled proton type.	The customer needs to assess the usage of JMS.
Core-9012-03: BROKER: Decoding error; proton TIMESTAMP type not handled; dropping (s)	LBM received an unhandled proton type.	The customer needs to assess the usage of JMS.
Core-9012-04: BROKER: Decoding error; proton DECIMAL128 type not handled; dropping (s)	LBM received an unhandled proton type.	The customer needs to assess the usage of JMS.
Core-9012-05: BROKER: Decoding error; proton UUID type not handled; dropping (s)	LBM received an unhandled proton type.	The customer needs to assess the usage of JMS.
Core-9012-06: BROKER: Decoding error; proton BINARY type not handled; dropping (s)	LBM received an unhandled proton type.	The customer needs to assess the usage of JMS.

Core-9012-07: BROKER: Decoding error; proton SYMBOL type not handled; dropping (s)	LBM received an unhandled proton type.	The customer needs to assess the usage of JMS.
Core-9012-08: BROKER: Decoding error; proton DESCRIBED type not handled; dropping (s)	LBM received an unhandled proton type.	The customer needs to assess the usage of JMS.
Core-9012-09: BROKER: Decoding error; proton ARRAY type not handled; dropping (s)	LBM received an unhandled proton type.	The customer needs to assess the usage of JMS.
Core-9012-10: BROKER: Decoding error; proton LIST type not handled; dropping (s)	LBM received an unhandled proton type.	The customer needs to assess the usage of JMS.
Core-9012-11: BROKER: Decoding error; proton MAP type not handled; dropping (s)	LBM received an unhandled proton type.	The customer needs to assess the usage of JMS.
Core-9012-12: BROKER: Decoding error; encountered Vendor specific property that is not understood (s)	LBM received an unhandled proton type.	The customer needs to assess the usage of JMS.
Core-9012-13: BROKER: Decoding error; encountered JMS property that will not pass through (s)	LBM received an unhandled proton type.	The customer needs to assess the usage of JMS.
Core-9012-14: BROKER: Message type (d) not handled; defaulting to Byte Message	Customer has set a JMS_UM_↩ MessageType that is not understood or not supported. Defaulting to Byte Message.	The customer needs to check their settings for JMS_UM_Message↩ Type.
Core-9012-16: BROKER: Message type (d) not handled; defaulting to Byte Message	Customer has set a JMS_UM_↩ MessageType that is not understood or not supported. Defaulting to Byte Message.	The customer needs to check their settings for JMS_UM_Message↩ Type.
Core-9012-17: BROKER: Text Message string length (d) does not match user message length (d); using string length.	The Text Message string lenght does not match the msg_len that the user supplied.	The customer needs to check the parameters passed when sending messages.
Core-9012-18: BROKER: Proton message type (d) not handled; dropping.	The Proton message type is not handled.	This can happen when JMS applications generate messages not handled by LBM.
Core-9013-8: Unicast resolver instance for lbmrd s received datagram from unknown source s - dropping	A UDP datagram was received on a topic resolution socket that was not from the IP and port of the lbmrd that the socket was configured to use, and so this datagram was dropped. This can happen if an application acquires a port that was recently used by a different application and lbmrd.	Configure separate resolver unicast port ranges for each lbmrd.
Core-9045-1: brokered contexts do not allow the use of late-join for receivers, disabling.	The user configured "use_late_↩ join" which is not supported on a brokered context.	The user should be informed of this limitation and set the configuration appropriately.
Core-9045-2: brokered contexts do not allow the use of off-transport recovery, disabling.	The user configured "use_otr" which is not supported on a brokered context.	The user should be informed of this limitation and set the configuration appropriately.
Core-9047-1: Cannot use explicit batching when sending messages to a queue, ignoring.	Sending a message with the Explicit Batching flags is not supported on a brokered context.	The user should be informed of this limitation.

Core-9053-2: UMQ participant only option has no effect with broker source, ignoring.	The user configured "umq_queue_participants_only" which is not supported on a brokered context.	The user should be informed of this limitation and set the configuration appropriately.
Core-9089-1: brokered contexts do not support channels, disabling.	The user configured "null_channel_behavior" which is not supported on a brokered context.	The user should be informed of this limitation and set the configuration appropriately.
Core-9089-2: brokered contexts do not support channels, disabling.	The user configured "lbm_rcv_topic_attr_recv_unrec_chan_behavior" which is not supported on a brokered context.	The user should be informed of this limitation and set the configuration appropriately.
Core-9106-110: WARNING: could not set SO_TIMESTAMPING on multicast source socket: s	An error was returned from the OS while trying to set the SO_TIMESTAMPING flag on the source socket.".	SO_TIMESTAMPING is not supported by this platform.
Core-9106-112: WARNING: Context configuration option transport_lbtrm_source_timestamp not valid on this platform.	Context configuration option transport_lbtrm_source_timestamp requires recvmmsg() which is only available as of Linux 2.6.32 and glibc 2.12.	Need to update to at least Linux 2.6.32 and glibc 2.12.
Core-9106-120: WARNING: could not set SO_TIMESTAMPING on multicast receive socket: s	An error was returned from the OS while trying to set the SO_TIMESTAMPING flag on the receive socket.".	SO_TIMESTAMPING is not supported by this platform.
Core-9106-122: WARNING: Context configuration option transport_lbtrm_receiver_timestamp not valid on this platform.	Context configuration option transport_lbtrm_receiver_timestamp requires recvmmsg() which is only available as of Linux 2.6.32 and glibc 2.12.	Need to update to at least Linux 2.6.32 and glibc 2.12.
Core-9113-1: The configured fd_management_type is ignored when using a brokered context	The user set the "fd_management_type" configuration option which is not supported on a brokered context.	The user should be informed of the limitation with brokered contexts.
Core-9160-1: INFO: Attempted IP_ADD_MEMBERSHIP on multicast receive socket returned ENOBUFS, retrying.	ENOBUFS was returned from the OS while trying to set the socket option IP_ADD_MEMBERSHIP. IBM recommends that in this situation, retrying the request will resolve the situation. UM will continue to retry the request.	This is only an informational message and no further action is required.
Core-9160-2: WARNING: could not IP_ADD_MEMBERSHIP on multicast receive socket: s	An error was returned from the OS while trying to set the socket option IP_ADD_MEMBERSHIP.	Refer to the OS error number and message given after the UMS message "could not IP_ADD_MEMBERSHIP on multicast receive socket".
Core-9222-1: WARNING: The umq_queue_activity_timeout can only be set to zero at this time, ignoring the configured value.	umq_queue_activity_timeout is configured with non-zero value	umq_queue_activity_timeout can not be configured with non-zero value at this time. Zero means no timeout.
Core-9222-2: WARNING: The umq_queue_activity_timeout can only be set to zero at this time, ignoring the configured value.	umq_queue_activity_timeout is configured with non-zero value	umq_queue_activity_timeout can not be configured with non-zero value at this time. Zero means no timeout.
Core-9230-01: BROKER: Error while establishing broker connection (s:s), error (d).	Error trying to establish a connection to the broker.	Make sure the broker is running. If HA is used, this might happen when trying to find the active broker.

Core-9313-1: WARNING: could not find a broadcast capable, non-loopback interface.	As UMS initializes, it scans all the network cards in the system. If no network card is listed as supporting broadcast capabilities, Ultra Messaging generates this warning.	Check network card capabilities and configuration.
Core-9313-2: WARNING: using first unicast capable interface instead.	As UMS initializes, it scans all the network cards in the system. No broadcast or multicast capable card was found, but a unicast capable card was found. The first unicast capable card will be used.	Check network card configuration if you expect one of the network cards to be multicast capable.
Core-9313-3: WARNING: could not find a non-loopback interface.	As UMS initializes, it scans all the network cards in the system. If no network card is found, Ultra Messaging generates this warning.	Check network card capabilities and configuration.
Core-9336-1: INFO: ULB Receiver on topic "%s" has use_late_join or use_otr enabled but these are not compatible with ULB and will be disabled.	Late Join and OTR are not compatible with ULB.	Set use_otr and use_late_join to 0 for ULB receivers.
Core-9354-1: ume_store_behavior round-robin(rr) is no longer a valid value. Setting to quorum-consensus(qc).	The value of LBM_SRC_TO↩PIC_ATTR_UME_STORE_B↩EHAVIOR_RR (round-robin) is no longer valid for option ume↩_store_behavior. The value will be overridden and set to LBM_SRC_TOPIC_ATTR_U↩ME_STORE_BEHAVIOR_QC (quorum-consensus).	No further action is required as the value is correctly set. In order to avoid this message, change the configuration file(s) or user code to no longer set this value for ume_↩store_behavior.
Core-9354-2: ume_store_behavior round-robin(rr) is no longer a valid value. Setting to quorum-consensus(qc).	The values round-robin or rr are no longer valid for option ume↩_store_behavior. The value will be overridden and set to quorum-consensus.	No further action is required as the value is correctly set. In order to avoid this message, change the configuration file(s) or user code to no longer set this value for ume_↩store_behavior.
Core-9401-4: WARNING: default↩_interface for a context should be set to a valid network interface.	This warning occurs if default_↩interface was not specified as a context attribute.	Set default_interface to a valid network interface to avoid the possibility of defaulting to the wrong interface should the interface order change in the future on this machine.
Core-9565-24: Could not get Diffie-Hellman parameters; anonymous cipher suites will not be supported.	Diffie-Hellman parameters could not be set; anonymous DH cipher suites will not work.	OpenSSL might be out of date or the wrong version. Contact Informatica support.
Core-9565-25: lbm_openssl_init↩: TLS 1.1 not supported by Open↩SSL library [s]; TLS will not be available for data transports	The version of OpenSSL in use does not support TLS 1.1, which is required.	Check the version of OpenSSL in use. Contact Informatica support.
Core-9565-26: LBM_OPENSS↩L_CONTEXT_OPTIONS environment variable was set to "%s", which was not understood. Default OpenSSL context options will be used instead.	The content of the LBM_OPENS↩SL_CONTEXT_OPTIONS environment variable was not understood.	Check the LBM_OPENSSL_C↩ONTEXT_OPTIONS environment variable to make sure it specifies valid options.
Core-9565-27: TLS: Peer certificate verification failed; error d ("%s"), depth d, s, s	A peer certificate failed a verification check.	Check SSL certificate chain for errors.

Core-9565-28: TLS: Peer certificate verification failed; error d ("%s"), depth d, s	A peer certificate failed a verification check.	Check SSL certificate chain for errors.
Core-9565-29: TLS certificate key file "%s" is encrypted and requires a password, but no password was configured.	An encrypted private key file was used, but the password to decrypt it was not provided.	Set the private key file's password via the context tls_∗_certificate_↩ key_password options.
Core-9565-30: TLS: Using system default paths for trusted certificates FAILED.	The Windows system certificate store could not be opened.	Contact Informatica support.
Core-9565-31: lbm_openssl_ctx↩ _set_certificates: certificate file set, but no certificate key file specified; certificate file will be ignored	If a certificate is configured, the certificate's private key must also be configured.	Make sure the context_∗_↩ certificate_key options are set.
Core-9565-32: lbm_openssl_ctx↩ _set_certificates: certificate key file set, but no certificate file specified; key file will be ignored	A certificate key file was configured, but not a corresponding certificate.	Make sure the appropriate context tls_∗_certificate option is set.
Core-9565-33: SSL socket had unexpected WANT_WRITE	An unexpected OpenSSL error occurred.	Contact Informatica support.
Core-9565-34: lbm_openssl_↩ socket_read: sock fd d could only write d bytes out of d	An unexpected OpenSSL error occurred.	Contact Informatica support.
Core-9565-35: SSL socket had unexpected WANT_WRITE	An unexpected OpenSSL error occurred.	Contact Informatica support.
Core-9565-36: SSL socket had unexpected error	An unexpected OpenSSL error occurred.	Contact Informatica support.
Core-9565-37: Attempted to negotiate protocol "%s" with peer s:d, but peer refused. Now trying protocol "%s".	The other side of a TCP connection actively refused a proposed protocol; usually this means the other application is not configured to support the protocol or is an older version that does not understand it.	Check for version or configuration mismatches.
Core-9565-38: Attempted to negotiate protocol "%s" with peer s:d, but peer refused. Unable to communicate with peer.	The other side of a TCP connection actively refused a proposed protocol; usually this means the other application is not configured to support the protocol or is an older version that does not understand it.	Check for version or configuration mismatches.
Core-9565-39: LBMC CNTL transport security header size incorrect. Dropping. Origin: s:d.	An a transport security header with an incorrect length was received.	Check the reported IP address and port for non-UM applications.
Core-9565-40: Peer "PRI_BUF↩ F_IP" configured with no allowed protocols in common; any further messages from peer will not be received.	The other side of a TCP connection is explicitly configured to not allow any protocols that we can speak.	Check for version or configuration mismatches.
Core-9565-41: Creating source T↩ LS context failed; TLS will not be available for sending data.	Creating a TLS context failed; this could be due to running out of memory.	Contact Informatica support.
Core-9565-42: Creating receiver TLS context failed; TLS will not be available for receiving data.	Creating a TLS context failed; this could be due to running out of memory.	Contact Informatica support.

Core-9565-43: WARNING: TCP session exists but has different security protocol preferences ("%s"); security protocol preferences "%s" were requested but will not be used.	Once a source has created a transport session a subsequent source joining the same transport session cannot configure different TLS settings. Please refer to UMS Objects section of the Design Concepts in the documentation.	Make sure all sources on the same transport session have matching security settings.
Core-9566-11: could not allocate u bytes [s:d]	The system was not able to allocate the amount of memory requested.	If the amount requested was particularly large, the problem may be a misconfiguration; however if the amount requested was relatively small, the physical memory on the machine may be over committed; try moving some applications to another machine.
Core-9566-12: could not allocate u bytes for string dup [s:d]	The system was not able to allocate the amount of memory required for string duplication.	The physical memory on the machine may be over committed; try moving some applications to another machine.
Core-9566-1: could not allocate u bytes for string dup [s:d]	The system was not able to allocate the amount of memory required for string duplication.	The physical memory on the machine may be over committed; try moving some applications to another machine.
Core-9566-2: could not allocate u bytes [s:d]	The system was not able to allocate the amount of memory requested.	If the amount requested was particularly large, the problem may be a misconfiguration; however if the amount requested was relatively small, the physical memory on the machine may be over committed; try moving some applications to another machine.
Core-9566-3: could not allocate u bytes [s:d]	The system was not able to allocate the amount of memory requested.	If the amount requested was particularly large, the problem may be a misconfiguration; however if the amount requested was relatively small, the physical memory on the machine may be over committed; try moving some applications to another machine.
Core-9566-8: could not allocate u bytes [s:d]	The system was not able to allocate the amount of memory requested.	If the amount requested was particularly large, the problem may be a misconfiguration; however if the amount requested was relatively small, the physical memory on the machine may be over committed; try moving some applications to another machine.
Core-9571-10: Domain name interface: s resolved to ip: s CIDR: d	The provide domain name interface was resolved via DNS lookup.	
Core-9571-16: Domain name address: s resolved to ip: s	The provide domain name was resolved via DNS lookup.	
Core-9586-1: Attempted to negotiate protocol "%s" with peer s:d, but peer refused. Now trying protocol "%s".	The other side of a TCP connection actively refused a proposed protocol; usually this means the other application is not configured to support the protocol or is an older version that does not understand it.	Check for version or configuration mismatches.

Core-9586-2: Attempted to negotiate protocol "%s" with peer s:d, but peer refused. Unable to communicate with peer.	The other side of a TCP connection actively refused a proposed protocol; usually this means the other application is not configured to support the protocol or is an older version that does not understand it.	Check for version or configuration mismatches.
Core-9588-01: Negotiation timeout with peer s:d.	Security negotiation timed out.	Check for version or configuration mismatches.
Core-9588-02: Negotiation timeout with peer s:d.	Security negotiation timed out.	Check for version or configuration mismatches.
Core-9588-03: Request negotiate timeout with peer s:d.	Security negotiation timed out.	Check for version or configuration mismatches.
Core-9588-04: Response negotiate timeout with peer s:d.	Security negotiation timed out.	Check for version or configuration mismatches.
Core-9592-1: WARNING: Requested receiver attributes for receiver on topic [s] do not allow any messages to be delivered. Receiver will not receive any messages.	The receiver is configured in a way that won't allow it to receive any messages.	Check configuration and make sure a receiver that cannot receive any messages was what was intended.
Core-9592-2: WARNING: Request port configuration settings do not allow any messages to be delivered. Context will not be able to receive certain message types.	The context's request port is configured in a way that won't allow it to receive any messages.	Check configuration and make sure a context that cannot receive any messages on its request port was what was intended.
Core-9592-3: WARNING: Requested wildcard receiver attributes for wildcard receiver on pattern [s] do not allow any messages to be delivered. Receiver will not receive any messages.	The wildcard receiver is configured in a way that won't allow it to receive any messages.	Check configuration and make sure a wildcard receiver that cannot receive any messages was what was intended.
Core-9600-01: Setting mim_↩address on a security/compression context is not supported. Disabling MIM.	Multicast Immediate Messages are not supported on a Security and/or Compression context. Setting MIM options is not allowed.	Do not set MIM options on a security/compression context.
Core-9612-2: received lji request, but Late-Join not configured: from ip:port[s:d] for topic[u]	UMS received Late Join Request message however late-join is not configured for this source. This is not a serious problem but indicates that there is a mismatch between this process and another.	Check the system for port re-use on application restart and similar behavior.
Core-9625-1: WARNING↩: resovler_unicast_daemon entry (s:u) already exist. Skipping...	The lbm_context_attr_set/sset() detected duplicate unicast resolver entries. The duplicate entries will be skipped.	Check the config file or code (if config set via code) for duplicate resolver_unicast_daemon entries. Also check if **lbm_↩config()** is loaded multiple times with the same resolver_unicast_↩daemon entries
Core-9626-1: WARNING: ume_↩store entry (u:s:u:u:u) already exist. Skipping...	The **lbm_src_topic_attr_setopt()** detected duplicate ume_store entries. The duplicate entries will be skipped.	Check the config file or code (if config set via code) for duplicate ume_store entries. Also check if **lbm_config()** is loaded multiple times with the same ume_store entries

Core-9626-2: WARNING: ume_↩ store_name entry (s:u:u) already exist. Skipping...	The **lbm_src_topic_attr_setopt()** detected duplicate ume_store_↩ name entries. The duplicate entries will be skipped.	Check the config file or code (if config set via code) for duplicate ume_store_name entries. Also check if **lbm_config()** is loaded multiple times with the same ume↩ _store_name entries
Core-9640-1: WARNING: broker entry (s:u) already exist. Skipping...	The lbm_context_attr_setopt/str_↩ setopt() detected duplicate broker entries. The duplicate entries will be skipped.	Check the config file or code (if config set via code) for duplicate broker entries. Also check if **lbm↩ _config()** is loaded multiple times with the same broker entries
Core-9709-1: epoll_ctl: EPOLL_↩ CTL_DEL returned: errno:d:s	epoll returned an error during lbm↩ _cancel_fd call	
Core-9726-1: WARNING: Context configuration option transport_↩ lbtrm_source_timestamp not valid with the installed version of Onload.	Context configuration option transport_lbtrm_source_↩ timestamp requires OpenOnload-201509 or later.	Need to update the installed version of Open Onload.
Core-9728-10: Problem detected trying to setup a TLS context.	Creating the TLS context failed due to an error with strdup(). There could be a memory issue.	Check memory utilization and availability.
Core-9728-11: Problem detected trying to setup a TLS context.	Creating the TLS context failed due to an error with strdup(). There could be a memory issue.	Check memory utilization and availability.
Core-9728-12: Problem detected trying to setup a TLS context.	Creating the TLS context failed due to an error with strdup(). There could be a memory issue.	Check memory utilization and availability.
Core-9728-13: Problem detected trying to setup a TLS context.	Creating the TLS context failed due to an error with strdup(). There could be a memory issue.	Check memory utilization and availability.
Core-9728-14: Problem detected trying to setup a TLS context. No configured ciphers were available.	An error occurred when parsing and creating the configured TLS suite.	Check the parameters for the tls↩ _cipher_suites option or check the OpenSSL version.
Core-9728-15: Problem detected trying to setup a TLS context. TLS initialization failed or no configured ciphers were available.	An error occurred when creating the OpenSSL context.	Check the OpenSSL version to make sure it is the version delivered with LBM. Also check the tls_cipher_suites configuration option.
Core-9729-1: Unexpected EWO↩ ULDBLOCK while receiving Topic Resolution packets. Dropping.	An EWOULDBLOCK was returned on a Topic Resolution socket. That is typically not expected since L↩ BM does a "select" on the socket and only reads if data is ready. This could be a data error such as a checksum issue.	The user should find the source of the corruption and resolve the source of the issue.
Core-9729-2: Unexpected EWO↩ ULDBLOCK while receiving source LBT-RM packets. Dropping.	An EWOULDBLOCK was returned on the LBT-RM source socket. That is typically not expected since L↩ BM does a "select" on the socket and only reads if data is ready. This could be a data error such as a checksum issue.	The user should find the source of the corruption and resolve the source of the issue.

Core-9729-3: Unexpected EWO↩ ULDBLOCK while receiving LBT-↩ RM packets. Dropping.	An EWOULDBLOCK was returned on the LBT-RM receive socket. That is typically not expected since LBM does a "select" on the socket and only reads if data is ready. This could be a data error such as a checksum issue.	The user should find the source of the corruption and resolve the source of the issue.
Core-9729-4: Unexpected EWO↩ ULDBLOCK while receiving source LBT-RU packets. Dropping.	An EWOULDBLOCK was returned on the LBT-RU source socket. That is typically not expected since L↩ BM does a "select" on the socket and only reads if data is ready. This could be a data error such as a checksum issue.	The user should find the source of the corruption and resolve the source of the issue.
Core-9729-5: Unexpected EWO↩ ULDBLOCK while receiving LBT-↩ RU packets. Dropping.	An EWOULDBLOCK was returned on the LBT-RU receive socket. That is typically not expected since L↩ BM does a "select" on the socket and only reads if data is ready. This could be a data error such as a checksum issue.	The user should find the source of the corruption and resolve the source of the issue.
Core-9729-6: Unexpected EWO↩ ULDBLOCK while receiving Wildcard LBT-RM packets. Dropping.	An EWOULDBLOCK was returned on a Wildcard LBT-RM socket. That is typically not expected since L↩ BM does a "select" on the socket and only reads if data is ready. This could be a data error such as a checksum issue.	The user should find the source of the corruption and resolve the source of the issue.
Core-9743-08: WARNING: proactive keepalive is not supported by the store. See the Operations Guide for configuration advice.	The store registration response indicates that the store does not support receiver proactive keepalive. This is determined by the registration handshake between the topic receiver and the UME store daemon.	This warning will occur for every registration and does not indicate a misconfiguration between the store and topic receiver. Since the receiver does support proactive keepalive, the benefits of that feature can be realized by setting the store keepalive-interval option to be greater than the context ume_proactive_keepalive_interval in this receiver. This prevents the store's ume_activity_timer for this receiver from expiring and initiating keepalive messages to the receiver. This message can appear until both the store and all topic receivers are upgraded to a 6.9.1 or later release.
Core-9779-101: WARNING: Topic [s] joining session [s] which exists and uses a different transport_↩ lbtrm_nak_init_backoff_interval [d] than requested [d].	After a receiver has created a transport session, a subsequent receiver joining the same transport session cannot configure a different transport_lbtrm_nak_init↩ _backoff_interval setting.	
Core-9779-102: WARNING: Topic [s] joining session [s] which exists and uses a different transport↩ _lbtru_nak_init_backoff_interval [d] than requested [d].	After a receiver has created a transport session, a subsequent receiver joining the same transport session cannot configure a different transport_lbtru_nak_init↩ _backoff_interval setting.	

Core-9829-1: all sources must be deleted before deleting the context	You cannot delete a context while it still has active sources.	Delete all sources first then delete the context.
Core-9829-2: all receivers must be deleted before deleting the context	You cannot delete a context while it still has active receivers.	Delete all receivers first then delete the context.
Core-9941-1212: specified smart source user buffer count of d will be increased to the next highest power of two: d	The smart_src_user_buffer_count value is not a power of two	Increase the smart_src_user_↩ buffer_count value to a power of two
Core-9941-2212: specified smart source retention buffer count of d will be increased to the next highest power of two: d	The smart_src_retention_buffer_↩ count value is not a power of two	Increase the smart_src_retention↩ _buffer_count value to a power of two
Core-9941-3131: specified smart source transmission window buffer count of d will be increased to the next highest power of two: d	The transport Smart Source transmission window buffer value is not a power of two.	To avoid this message round up all transport Smart Source transmission window buffer count values to a power of two.
Core-9941-4444: WARNING: LBM_SMART_SOURCE_CHECK logic enabled.	LBM_SMART_SOURCE_CHE↩ CK logic enabled. This is useful and recommended for debugging but may seriously degrade performance.	Unset LBM_SMART_SOURCE_↩ CHECK for best performance in your system.
Core-9941-6002: JNI: Source event callback threw an exception.	An exception occurred while processing an event callback.	Check the logs for specific details of the exception.
Core-9950-1: Critical Windows Completion Port error (d) (s): the Receive I/O operation could not be started. No data will be received (s)	The Receive operation for Windows Completion Ports did not start. Deafness will likely occur.	The user needs to fix the issue with the communications and restart their process.
Core-9951-1: Topic Resolution socket send error (s).	A socket error occurred when sending a Topic Resolution message. The Topic Resolution message will not be retried.	The socket error is included. The user needs to resolve the error and restart the process.
Core-9951-2: Topic Resolution socket send error (s).	A socket error occurred when sending a Topic Resolution message. The Topic Resolution message will not be retried.	The socket error is included. The user needs to resolve the error and restart the process.
Core-9954-50: User defined datagram acceleration will override DBL library pre-loaded functions	The Datagram Acceleration feature is being used which will override the DBL libraries loaded.	The user needs to be aware that Datagram Acceleration and DBL cannot be used at the same time.

12.2 UM Core API Messages

CoreApi-10046-01: Onload stackname is not supported	This platform does not support setting the onload stackname.	Check documentation for list of platforms that support onload.
CoreApi-10046-02: Onload stack name must be 8 characters or less	Onload stackname is limited to 8 characters or less.	Optlen value must be 8 or less.
CoreApi-10046-03: optval must not be NULL	optval parameter cannot be NULL	

CoreApi-10046-04: optlen must not be NULL	optlen parameter cannot be NULL	
CoreApi-10046-05: optval is not large enough	Provided optlen was not large enough to contain stackname string	optlen now contains the minimum necessary size.
CoreApi-10055-10: optval must be 0 or greater than 0	The smart_src_message_↩ property_int_count did not contain a positive integer	The smart_src_message_↩ property_int_count must be zero 0 or greater
CoreApi-10055-1177: optlen incorrect size	The memory management callbacks structure is expected to be the size of lbm_mem_mgt_↩ callbacks_t	The user needs to pass the correct size to the option setter
CoreApi-10055-1178: malloc callback function must be valid	The memory allocation callback is required to acquire memory regions	Supply an application-specific memory allocation function
CoreApi-10055-1179: free callback function must be valid	The memory deallocation callback is required to return memory regions	Supply an application-specific memory deallocation function
CoreApi-10055-1180: str_setopt not supported for option	String set option is not supported for memory management callbacks	
CoreApi-10055-1181: optlen incorrect size	The memory management callbacks structure is expected to be the size of lbm_mem_mgt_↩ callbacks_t	The user needs to pass the correct size to the option getter
CoreApi-10055-1182: str_getopt not supported for option	String get option is not supported for memory management callbacks	
CoreApi-10055-118: corrupted user buffer pointer structure	A smart source call specified what appears to be a corrupted user buffer pointer structure.	Ensure that writes using the user buffer pointer do not exceed the range of addresses bounded by the source scoped smart_src_max_↩ message_length configuration option.
CoreApi-10055-119: user message len exceeds the configured maximum	A smart source call specified a message length greater than the configured maximum.	Ensure that the message length is less than or equal to the source scoped smart_src_max_↩ message_length configuration option.
CoreApi-10055-11: optval too large	The smart_src_message_↩ property_int_count is larger than the maximum allowed size	Decrease the size of smart_src_↩ message_property_int_count
CoreApi-10055-1200: cannot update spectrum channel	A smart source send call specified a Spectrum channel update without specifying the LBM_SSRC_S↩ END_EX_FLAG_CHANNEL send flag.	Only set LBM_SSRC_SEND_EX↩ _FLAG_UPDATE_CHANNEL with the LBM_SSRC_SEND_EX_FL↩ AG_CHANNEL flag set.
CoreApi-10055-1201: cannot update spectrum channel	A smart source send call specified a Spectrum channel update of a buffer that has never been formatted.	Only set LBM_SSRC_SEND_↩ EX_FLAG_UPDATE_CHANNEL if the buffer has been previously formatted with a send specifying LBM_SSRC_SEND_EX_FLA↩ G_CHANNEL.

CoreApi-10055-1202: cannot send on a spectrum channel without message properties	A smart source send call attempted to send on a spectrum channel without message properties.	With both spectrum channel and message properties configured you have the option to either send a message with both spectrum channel and message properties, or without both, i.e., you cannot selectively send one without the other.
CoreApi-10055-120: spectrum channel is not configured	A smart source send call specified a Spectrum channel that has not been configured.	Either clear the LBM_SSRC_S↩END_EX_FLAG_CHANNEL flag or set the source scoped smart↩_src_enable_spectrum_channel configuration option.
CoreApi-10055-121: integer message properties are not configured	A smart source send call specified Message Properties that have not been configured.	Either clear the LBM_SSRC_SE↩ND_EX_FLAG_PROPERTIES flag or set the source scoped smart_↩src_message_property_int_count configuration option.
CoreApi-10055-1221: cannot update property values	A smart source send call specified a message property values update with a non-positive number of integer message properties.	Only set LBM_SSRC_SEND_EX↩_FLAG_UPDATE_PROPERTY_↩VALUES with a positive number of integer message properties that is less than or equal to the configured smart_src_message_property_↩int_count.
CoreApi-10055-1222: integer message properties count not positive	A smart source send call specified a non-positive number of integer Message Properties.	Either clear the LBM_SSRC_S↩END_EX_FLAG_PROPERTIES flag, or set message properties integer count to be a positive integer that is less than or equal to the configured smart_src_message_↩property_int_count.
CoreApi-10055-1227: cannot update property values	A smart source send call specified a message property values update without specifying the LBM_SSRC_SEND_EX_FLAG_↩PROPERTIES send flag.	Only set LBM_SSRC_SEND_EX↩_FLAG_UPDATE_PROPERTY_↩VALUES with the LBM_SSRC_↩SEND_EX_FLAG_PROPERTIES flag set.
CoreApi-10055-122: integer message properties exceed the configured maximum	A smart source send call specified more integer Message Properties than the configured maximum.	Either clear the LBM_SSRC_S↩END_EX_FLAG_PROPERTIES flag, or increase the source scoped smart_src_message_property_↩int_count, or reduce the number integer message properties.
CoreApi-10055-123: invalid pointer to integer message property values array	A smart source send call specified a NULL pointer to an array of integer message property values.	Either clear the LBM_SSRC_S↩END_EX_FLAG_PROPERTIES flag, or specify a pointer to an array of integer message property values.
CoreApi-10055-124: invalid pointer to integer message property key names array	A smart source send call specified a NULL pointer to an array of integer message property key names.	Either clear the LBM_SSRC_S↩END_EX_FLAG_PROPERTIES flag, or specify a pointer to an array of integer message property key names.
CoreApi-10055-125: invalid pointer to integer message property key name #d	A smart source send call specified a NULL pointer to an integer message property key name.	Specify pointers to integer message property key names for the number of specified message property integers.

CoreApi-10055-126: invalid pointer to integer message property key name #d	A smart source send call specified a pointer to a zero-length integer message property key name.	Specify pointers to non-NULL integer message property key names for the number of specified message property integers.
CoreApi-10055-127: integer message property key name #d too long	A smart source send call specified a pointer to an integer message property key name greater than 7 characters.	Specify pointers to integer message property key names that are between 1 and 7 characters in length.
CoreApi-10055-128: cannot update property values	A smart source send call specified a message property values update of a buffer that has never been formatted.	Only set LBM_SSRC_SEND_E↩X_FLAG_UPDATE_PROPERT↩Y_VALUES if the buffer has been previously formatted with a send specifying LBM_SSRC_SEND_↩EX_FLAG_PROPERTIES.
CoreApi-10055-129: cannot send message properties without a spectrum channel	A smart source send call attempted to send message properties without specifying a spectrum channel.	With both spectrum channel and message properties configured you have the option to either send a message with both spectrum channel and message properties, or without both, i.e., you cannot selectively send one without the other.
CoreApi-10055-12: optval not numeric	The smart_src_message_↩property_int_count value is not numeric	The smart_src_message_↩property_int_count must be a numeric value
CoreApi-10055-130: inflight parameter must be a valid pointer	The inflight parameter was NULL.	The inflight parameter must be a valid pointer.
CoreApi-10055-13: optval must be 0 or greater than 0	The smart_src_message_↩property_int_count did not contain a positive integer	The smart_src_message_↩property_int_count must be zero or greater
CoreApi-10055-140: smart source could not deregister from store	Smart Source failed trying to deregister from a store.	Try again, unicast control channel between smart source and store may be down.
CoreApi-10055-14: optval too large	The smart_src_message_↩property_int_count is larger than the maximum allowed size	Decrease the size of smart_src_↩message_property_int_count
CoreApi-10055-150: smart source is already deregistering from the stores	Smart Source is already deregistered.	Don't call lbm_ssrc_ume_↩deregister multiple times passing in the same smart source.
CoreApi-10055-15: optlen incorrect size	The size of the option was too large or too small	The smart_src_message_↩property_int_count must be sizeof(int)
CoreApi-10055-16: optlen too small	The size of the option buffer was too small to contain the option	The smart_src_message_↩property_int_count optlen must be at least 80
CoreApi-10055-1: optlen incorrect size	The smart_src_enable_spectrum↩_channel value contained an incorrect length	The smart_src_enable_spectrum↩_channel should be of sizeof(int)
CoreApi-10055-2985: event queues are not supported	Smart sources do not support event queues at this time.	evq parameter must be NULL.
CoreApi-10055-2987: Smart sources do not support receive delivery confirmation notifications	Smart sources do not support receive delivery confirmation notifications.	Set source option ume_↩confirmed_delivery_notification to 0.
CoreApi-10055-2988: Smart sources do not support unique confirmation notification	Smart sources do not support receive unique confirmation notification.	Set source option ume_retention↩_unique_confirmations to 0.

CoreApi-10055-2989: Smart sources do not accept stability notification for message fragments	Smart sources do not support stability notification for message fragments.	Either ignore this option and rely on the default (LBM_SRC_TOP↩IC_ATTR_UME_STABLE_EVE↩NT_PER_MESSAGE), or explicitly specify message notification attribute LBM_SRC_TOPIC_ATT↩R_UME_STABLE_EVENT_NONE or LBM_SRC_TOPIC_ATTR_U↩ME_STABLE_EVENT_PER_ME↩SSAGE.
CoreApi-10055-2999: INFO↩: Smart source smart_src_↩retention_buffer_count is less than ume_flight_size.	Setting the retention buffer count less than the UME flight size could force unacknowledged messages from the retention buffer.	Specify the smart_src_retention↩_buffer_count to be greater than ume_flight_size.
CoreApi-10055-2: optval must be 0 or 1	The smart_src_enable_spectrum↩_channel did not contain a positive integer	The smart_src_enable_spectrum↩_channel must be zero or 1
CoreApi-10055-3012: send would block because of flight size	The flight size behavior is "Block" & flight size will be exceeded.	Increase the flight size
CoreApi-10055-3040: Can not specify a negative number for inflight messages	Attempting to set the flight size of messages to a negative number	Ensure a positive integer for inflight messages is returned from the set flight size callback
CoreApi-10055-3041: Cannot increase inflight messages or bytes while decreasing the other	Attempting to increase the flight size messages or bytes and decrease the other.	Ensure that the inflight set callback returns a valid inflight structure, or call the method twice to set each one individually.
CoreApi-10055-3042: ssrc must be valid	The ssrc parameter was NULL.	The ssrc parameter must be a valid pointer.
CoreApi-10055-3043: inflight must be valid	The inflight parameter was NULL.	The inflight parameter must be a valid pointer.
CoreApi-10055-3044: ssrc is not using UME flight size	The Smart Source did not specify flight size.	Specify a UME flight size.
CoreApi-10055-3047: invalid flight size type d	The flight size type is invalid.	Specify a valid flight size type of L↩BM_FLIGHT_SIZE_TYPE_UME.
CoreApi-10055-3: optval too large	The smart_src_enable_spectrum↩_channel must be zero or 1	The smart_src_enable_spectrum↩_channel must be zero or 1
CoreApi-10055-4395: Message stability notification is not enabled	Per-send client object specified but message stability notification was not enabled.	Either enable message stability or remove the per-send client object.
CoreApi-10055-4397: Can't allocate per-send object node; message not sent [s:d]	Unable to allocate memory for the per-send object node.	The physical memory on the machine may be over committed; try moving some applications to another machine.
CoreApi-10055-4522: Can't allocate message properties of u bytes [s:d]	The system was not able to allocate the amount of memory requested.	The physical memory on the machine may be over committed; try moving some applications to another machine.
CoreApi-10055-4523: The number of Message Properties is larger than the maximum allowed size d [s:d]	The smart_src_message_↩property_int_count is larger than the maximum allowed size	Decrease the size of smart_src_↩message_property_int_count
CoreApi-10055-4524: Can't access message property key string d [s:d]	An exception occurred while processing a message property key string.	Check the logs for specific details of the exception.

CoreApi-10055-4525: Can't convert message property key string s [s:d]	Ran out of memory while creating a message property key string	The physical memory on the machine may be over committed; try moving some applications to another machine.
CoreApi-10055-4: optval not numeric	The smart_src_enable_spectrum↩_channel value is not numeric	The smart_src_enable_spectrum↩_channel must be a numeric value of 0 or 1
CoreApi-10055-5: optval must be 0 or 1	The smart_src_enable_spectrum↩_channel did not contain a positive integer	The smart_src_enable_spectrum↩_channel must be zero or 1
CoreApi-10055-6: optval too large	The smart_src_enable_spectrum↩_channel must be zero or 1	The smart_src_enable_spectrum↩_channel must be zero or 1
CoreApi-10055-7: optlen incorrect size	The size of the option was too large or too small	The smart_src_enable_spectrum↩_channel must be sizeof(int)
CoreApi-10055-8: optlen too small	The size of the option buffer was too small to contain the option	The smart_src_enable_spectrum↩_channel optlen must be at least 80
CoreApi-10055-9: optlen incorrect size	The smart_src_message_↩property_int_count value contained an incorrect length	The smart_src_message_↩property_int_count should be of sizeof(int)
CoreApi-10115-3320: lbm_↩socket_recv recv/recvfrom: s	An error was returned from the OS while trying a recv or recvfrom socket call. Refer to the OS error number and message.	Please use the appended operating system's WSA error message to further understand the circumstances of the error.
CoreApi-10115-3321: lbm_↩socket_recv recv/recvfrom: s	An error was returned from the OS while trying a recv or recvfrom socket call. Refer to the OS error number and message.	This is a platform specific error; please use the operating system's error code and description to further understand the circumstances of the error.
CoreApi-10115-3337: lbm_↩socket_sendb send/sendto: s	An error occurred while sending. The message will contain addition specific information, supplied by the operating system.	Please use the appended operating system's WSA error message to further understand the circumstances of the error.
CoreApi-10115-3338: lbm_↩socket_sendb send/sendto: s	An error occurred while sending. The message will contain addition specific information, supplied by the operating system.	This is a platform specific error; please use the operating system's error code and description to further understand the circumstances of the error.
CoreApi-10115-3342: lbm_↩socket_sendtob send/sendto: s	socket_sendtob: Error on socket send to destination. The message will contain addition specific information, supplied by the operating system.	Please use the appended operating system's WSA error message to further understand the circumstances of the error.
CoreApi-10115-3343: lbm_↩socket_sendtob send/sendto: s	socket_sendtob: Error on socket send to destination. The message will contain addition specific information, supplied by the operating system.	This is a platform specific error; please use the operating system's error code and description to further understand the circumstances of the error.
CoreApi-10115-3353: lbm_↩socket_sendbv : s	lbm_socket_sendtobv: Error on socket send to destination. The message will contain addition specific information, supplied by the operating system.	Please use the appended operating system's WSA error message to further understand the circumstances of the error.

CoreApi-10115-3354: lbm_socket_sendbv: s	lbm_socket_sendtobv: Error on socket send to destination. The message will contain addition specific information, supplied by the operating system.	This is a platform specific error; please use the operating system's error code and description to further understand the circumstances of the error.
CoreApi-10138-10: optval not supported	optval must either be LBM_CTX_ATTR_OP_EMBEDDED or LBM_CTX_ATTR_OP_SEQUENTIAL	
CoreApi-10138-11: optval not understood	optval must either be LBM_CTX_ATTR_OP_EMBEDDED or LBM_CTX_ATTR_OP_SEQUENTIAL	
CoreApi-10138-12: optlen incorrect size	optlen must be the size of an 'int'	
CoreApi-10138-13: optlen too small	optval must either be 'embedded' or 'sequential'	
CoreApi-10138-14: optlen incorrect size	optlen must be the size of an lbm_xsp_zero_transports_func_t	
CoreApi-10138-15: zero transports callback must be valid	optval must be a pointer to an lbm_xsp_zero_transports_func_t	
CoreApi-10138-16: str_setopt not supported for option	The lbm_xsp_attr_str_setopt API can not be used to set the zero transports func	Use lbm_xsp_attr_setopt instead
CoreApi-10138-17: optlen incorrect size	optlen must be the size of an lbm_xsp_zero_transports_func_t	
CoreApi-10138-18: str_getopt not supported for option	The lbm_xsp_attr_str_getopt API can not be used to get the zero transports func	Use lbm_xsp_attr_getopt instead
CoreApi-10138-1: attr, optname, and optval must not be NULL	attr, optname, and optval must all be valid pointers	
CoreApi-10138-20: attr must be valid	Must supply a valid pointer to a pointer to an lbm_xsp_attr_t	
CoreApi-10138-21: attr must be valid	Must supply a valid pointer to an lbm_xsp_attr_t	
CoreApi-10138-2: option s unknown	The specified xsp config option was not found	
CoreApi-10138-30: xspp must be valid	Must supply a valid pointer to a pointer that will be filled in with the xsp being created	
CoreApi-10138-31: ctx must be valid	Must supply a valid pointer to a context	
CoreApi-10138-37: xsp must be valid	Must supply a pointer to a valid xsp	
CoreApi-10138-38: xsp must be valid	Must supply a pointer to a valid xsp	
CoreApi-10138-39: xsp must be valid	Must supply a pointer to a valid xsp	
CoreApi-10138-3: attr, optname, and optval must not be NULL	attr, optname, and optval must all be valid pointers	
CoreApi-10138-4: option s unknown	The specified xsp config option was not found	
CoreApi-10138-5: attr, optname, optval, and optlen must not be NULL	attr, optname, optval, and optlen must all be valid pointers	
CoreApi-10138-6: option s unknown	The specified xsp config option was not found	

CoreApi-10138-70: optlen incorrect size	optlen must be the size of an lbm↩ _transport_mapping_func_t	
CoreApi-10138-71: mapping function must be valid	optval must be a pointer to an lbm↩ _transport_mapping_func_t	
CoreApi-10138-72: str_setopt not supported for option	The lbm_context_attr_str_setopt API can not be used to set the xport mapping func	Use lbm_context_attr_setopt instead
CoreApi-10138-73: optlen incorrect size	optlen must be the size of an lbm↩ _transport_mapping_func_t	
CoreApi-10138-75: str_getopt not supported for option	The lbm_context_attr_str_getopt API can not be used to set the xport mapping func	Use lbm_context_attr_getopt instead
CoreApi-10138-7: attr, optname, optval, and optlen must not be N↩ ULL	attr, optname, optval, and optlen must all be valid pointers	
CoreApi-10138-81: Can't allocate memory [s:d]	Java is unable to allocate memory	
CoreApi-10138-82: Can't allocate memory [s:d]	Java is unable to allocate memory	
CoreApi-10138-83: Can't allocate memory [s:d]	Java is unable to allocate memory	
CoreApi-10138-8: option s unknown	The specified xsp config option was not found	
CoreApi-10138-90: optlen incorrect size	optlen must be the size of an 'lbm↩ _ulong_t'	
CoreApi-10138-91: optval not numeric	optval must be able to be converted into an lbm_ulong_t	
CoreApi-10138-92: opval not a number	optval must be able to be converted into an lbm_ulong_t	
CoreApi-10138-93: optlen incorrect size	optlen must be the size of an 'lbm↩ _ulong_t'	
CoreApi-10138-94: optlen too small	optlen must be the size of an 'lbm↩ _ulong_t"	
CoreApi-10138-95: optlen too small	optlen must be the size of an 'lbm↩ _ulong_t"	
CoreApi-10138-9: optlen incorrect size	optlen must be the size of an 'int'	
CoreApi-10160-31: optlen incorrect size	transport_lbtru_smart_src_↩ transmission_window_buffer_↩ count value contained an incorrect length	transport_lbtru_smart_src_↩ transmission_window_buffer_↩ count should be of sizeof(int)
CoreApi-10160-32: optval must be greater than 0	transport_lbtru_smart_src_↩ transmission_window_buffer_↩ count did not contain a positive integer	transport_lbtru_smart_src_↩ transmission_window_buffer_↩ count must be a positive integer
CoreApi-10160-33: optval too large	transport_lbtru_smart_src_↩ transmission_window_buffer_↩ count is larger than the maximum allowed size	Decrease the size of transport_↩ lbtru_smart_src_transmission_↩ window_buffer_count
CoreApi-10160-34: optval not numeric	transport_lbtru_smart_src_↩ transmission_window_buffer_↩ count value was not numeric	transport_lbtru_smart_src_↩ transmission_window_buffer_↩ count must be a numeric value

CoreApi-10160-35: optval must be greater than 0	transport_lbtru_smart_src_↩ transmission_window_buffer_↩ count did not contain a positive integer	transport_lbtru_smart_src_↩ transmission_window_buffer_↩ count must be a positive integer
CoreApi-10160-36: optval too large	transport_lbtru_smart_src_↩ transmission_window_buffer_↩ count is larger than the maximum allowed size	Decrease the size of transport_↩ lbtru_smart_src_transmission_↩ window_buffer_count
CoreApi-10160-37: optlen incorrect size	The size of the option was too large or too small	transport_lbtru_smart_src_↩ transmission_window_buffer_↩ count must be sizeof(int)
CoreApi-10160-38: optlen too small	The size of the option buffer was too small to contain the option	transport_lbtru_smart_src_↩ transmission_window_buffer_↩ count optlen must be at least 80
CoreApi-10160-5565: Smart source may not use the same transport as a standard source	An lbm smart source may not reside with a standard source on the same transport.	Configure the smart source on an LBT-RU transport that only contains smart sources.
CoreApi-10160-5566: smart_src↩ _max_message_length exceeds the configured maximum message length for this transport session.	The first Smart Source to create a transport session establishes the maximum message length for all subsequent Smart Sources on that transport.	Decrease the size of smart_↩ src_max_message_length for this Smart Source or increase the size of smart_src_max_message↩ _length for the first Smart Source created on this transport session.
CoreApi-10160-5574: Could not allocate lu bytes. The product of transport_lbtru_smart_src↩ _transmission_window_buffer↩ _count and smart_src_max_↩ message_length exceeds available memory on your system.	The product of transport_lbtru_↩ smart_src_transmission_window↩ _buffer_count and smart_src_↩ max_message_length specifies more memory than is available on your system.	Decrease the size of transport↩ _lbtru_smart_src_transmission↩ _window_buffer_count and/or the smart_src_max_message_length.
CoreApi-10160-5575: Smart source may not use the same transport as a standard source	An lbm standard source may not reside with a smart source on the same transport.	Configure the standard source on an LBT-RU transport that only contains standard sources.
CoreApi-10160-5674: Could not allocate lu bytes. The product of transport_lbtru_smart_src↩ _transmission_window_buffer↩ _count and smart_src_max_↩ message_length exceeds available memory on your system.	The product of transport_lbtru_↩ smart_src_transmission_window↩ _buffer_count and smart_src_↩ max_message_length specifies more memory than is available on your system.	Decrease the size of transport↩ _lbtru_smart_src_transmission↩ _window_buffer_count and/or the smart_src_max_message_length.
CoreApi-10190-2: optlen incorrect size	optlen must be the size of an 'lbm↩ _ulong_t'	
CoreApi-10190-3: optval not numeric	optval must be able to be converted into an lbm_ulong_t	
CoreApi-10190-4: opval not a number	optval must be able to be converted into an lbm_ulong_t	
CoreApi-10190-5: optlen incorrect size	optlen must be the size of an 'lbm↩ _ulong_t'	
CoreApi-10193-1: optlen incorrect size	Attempted to set option round_↩ robin_xsp_count with an incorrect optlen size.	Optlen must be size of int.
CoreApi-10193-2: optval not numeric	Attempted to set option round↩ _robin_xsp_count with a non-numeric value.	Optval must be a numeric value, greater than or equal to 0.

CoreApi-10193-3: optlen incorrect size	Attempted to get option round_↩robin_xsp_count with an incorrect optlen size.	Optlen must be size of int.
CoreApi-10193-4: optlen too small	The size of the buffer passed in was less than the minimum buffer size required.	Make sure the buffer is large enough - at least LBM_MIN_SG↩ET_OPTLEN bytes in size.
CoreApi-10193-5: optval must be greater than or equal to 0	Attempted to set option round↩_robin_xsp_count with an invalid optval.	Optval must be a numeric value, greater than or equal to 0.
CoreApi-10193-6: optval must be greater than or equal to 0	Attempted to set option round↩_robin_xsp_count with an invalid optval.	Optval must be a numeric value, greater than or equal to 0.
CoreApi-10327-1: setting transport_lbtru_send_naks optlen incorrect size; sizeof(int) required	The given configuration option requires an option size of sizeof(int).	Set the correct option size for the given configuration option.
CoreApi-10327-2: setting transport_lbtru_send_naks optval must be 0 or 1	The given configuration option must be set to 0 or 1.	Set the option to 0 or 1.
CoreApi-10327-3: setting transport_lbtru_send_naks optval not numeric	The given configuration option is required to be numeric.	Set the correct value for the given configuration option.
CoreApi-10327-4: setting transport_lbtru_send_naks optval must be 0 or 1	The given configuration option must be set to 0 or 1.	Set the option to 0 or 1.
CoreApi-10327-5: getting transport_lbtru_send_naks optlen incorrect size	The given configuration option requires an option size of sizeof(int).	Set the correct option size for the given configuration option.
CoreApi-10327-6: string get transport_lbtru_send_naks optlen too small	The given configuration option string value requires a length of at least 80 bytes.	Set the correct option string length for the given configuration option.
CoreApi-10337-1: ULB Receiver on topic "%s" has ordered_delivery set to 0 but this is not compatible with ULB. Change value of ordered_delivery to 1 or -1 and try again.	Ordered delivery of 0 is not compatible with ULB.	You must set ordered_delivery to 0 or -1 for ULB receivers.
CoreApi-10339-01: lbm_xsp_↩register_fd: xsp must be valid	Must supply a pointer to a valid xsp	The user must supply a valid xsp
CoreApi-10339-02: lbm_xsp_↩cancel_fd: xsp must be valid	Must supply a pointer to a valid xsp	The user must supply a valid xsp
CoreApi-10347-10: optlen incorrect size	Size of optlen was incorrect for setting integer option	optlen must be size of int
CoreApi-10347-11: optval must be 0 or 1	Invalid value for optval	optval must be 0 or 1
CoreApi-10347-12: optval not numeric	Option string was not a number	Provide number as a string
CoreApi-10347-13: optval must be 0 or 1	Invalid value for optval	optval must be 0 or 1
CoreApi-10347-14: optlen incorrect size	Size of optlen was incorrect	optlen size must be size of int
CoreApi-10347-15: optlen too small	Size of optlen was too small	Size of optlen must be at least 80
CoreApi-10347-20: optlen incorrect size	Size of optlen was incorrect for setting integer option	optlen must be size of int
CoreApi-10347-21: optval must be 0 or 1	Invalid value for optval	optval must be 0 or 1

CoreApi-10347-22: optval not numeric	Option string was not a number	Provide number as a string
CoreApi-10347-23: optval must be 0 or 1	Invalid value for optval	optval must be 0 or 1
CoreApi-10347-24: optlen incorrect size	Size of optlen was incorrect	optlen size must be size of int
CoreApi-10347-25: optlen too small	Size of optlen was too small	Size of optlen must be at least 80
CoreApi-10347-30: optlen incorrect size	Size of optlen was incorrect for setting integer option	optlen must be size of int
CoreApi-10347-31: optval must be 0 or 1	Invalid value for optval	optval must be 0 or 1
CoreApi-10347-32: optval not numeric	Option string was not a number	Provide number as a string
CoreApi-10347-33: optval must be 0 or 1	Invalid value for optval	optval must be 0 or 1
CoreApi-10347-34: optlen incorrect size	Size of optlen was incorrect	optlen size must be size of int
CoreApi-10347-35: optlen too small	Size of optlen was too small	Size of optlen must be at least 80
CoreApi-10358-01: timeout (msec) must be zero when LBM_PROC↩_EVENT_EX_FLAG_USER_TIME is enabled	When setting the LBM_PROC_↩EVENT_EX_FLAG_USER_TIME flag, the user must set the timeout (msec) to zero to ensure that LBM gets needed time value updates.	Calls to **lbm_context_process↩_events_ex()** need to set the timeout to zero when the LBM_P↩ROC_EVENT_EX_FLAG_USER↩_TIME is set.
CoreApi-10369-10: optlen incorrect size	Size of optlen was incorrect for setting integer option	optlen must be size of int
CoreApi-10369-11: optval must be 0 or 1	Invalid value for optval	optval must be 0 or 1
CoreApi-10369-12: optval not numeric	Option string was not a number	Provide number as a string
CoreApi-10369-13: optval must be 0 or 1	Invalid value for optval	optval must be 0 or 1
CoreApi-10369-14: optlen incorrect size	Size of optlen was incorrect	optlen size must be size of int
CoreApi-10369-15: optlen too small	Size of optlen was too small	Size of optlen must be at least 80
CoreApi-10386-1: Debug message was null [s:d]	The debug message sent through the LBM JNI library was NULL.	Ensure that the String specified in the Debug message is not null.
CoreApi-10386-2: Can't allocate memory [s:d]	The LBM JNI library could not create a message string.	This usually indicates a severe out of memory condition.
CoreApi-10403-1000: error returned from pthread_create: d	An error was returned from pthread_create.	The error number is shown. Check the error status for pthread_create.
CoreApi-10403-1001: error returned from CreateThread: d	An error was returned from CreateThread.	The error number is shown. Check the error status for CreateThread.
CoreApi-10403-100: resolver_↩service optlen incorrect size	The option size is incorrect for the resolver_service (context) configuration option	Make sure the user specifies the correct option size: sizeof(lbm_↩resolver_service_entry_t)
CoreApi-10403-101: resolver_↩service optval too long	The resolver_service (context) string setter option length is too long	The user should check the parameters passed to the setter

CoreApi-10403-102: resolver_↩service ServiceIP:RemotePort is malformed	The resolver_service specification string format is as follows: ServiceIP:RemotePort where the ServiceIP refers to the service's IP address and the RemotePort refers to the Services's port.	Provide a valid resolver_service specification.
CoreApi-10403-103: resolver_↩service optval is malformed	The resolver_service option is malformed	The user needs to check the resolver_service configuration option
CoreApi-10403-104: resolver_↩service optval is malformed	The resolver_service (context) option is malformed	The user needs to check the resolver_service (context) configuration option
CoreApi-10403-105: resolver_↩service optval is too small to hold information, optlen set to required value	The user needs to allocate enough room for all resolver_service (context) options set	The user needs to check their get option usage
CoreApi-10403-106: resolver_↩service optval is too small to hold information, optlen set to required value	The user needs to allocate enough room for all resolver_service (context) options set	The user needs to check their get option usage
CoreApi-10403-110: resolver_↩service option is not supported at this time	The context option resolver_↩service is not yet supported.	Do not use the context option resolver_service at this time.
CoreApi-10403-111: resolver_↩service option is not supported at this time	The context option resolver_↩service is not yet supported.	Do not use the context option resolver_service at this time.
CoreApi-10403-112: resolver_↩service option is not supported at this time	The context option resolver_↩service is not yet supported.	Do not use the context option resolver_service at this time.
CoreApi-10403-113: resolver_↩service option is not supported at this time	The context option resolver_↩service is not yet supported.	Do not use the context option resolver_service at this time.
CoreApi-10403-300: The context is configured to use a Resolver Service which requires the respective transport interface to be specified.	When using the Resolver Service, the user must configure the transport interface for the transport being used.	Check the configuration to make sure the transport interface is set for the source transport in use.
CoreApi-10403-400: lbmLicense↩Bytes not enough buffer space to hold u [s:d]	There was not enough buffer space to hold the passed in binary license key.	The maximum length to pass in is 1024. Please make sure that the license key is in a valide buffer.
CoreApi-10403-401: Can't allocate memory for buffer of u bytes [s:d]	Memory could not be allocated for the decode buffer.	Please free up system resources and try the call again.
CoreApi-10403-402: License byte array invalid [s:d]	The passed in license key was invalid.	The license key parser should have more detail. See the error message and fix the license key and try again.
CoreApi-10489-11: lbm_↩winevlog_thread_main(): Error while dequeueing	Error while dequeueing from TL queue	Contact Informatica Support.
CoreApi-10489-12: lbm_↩winevlog_report_event(): Invalid event level d	Invalid Windows Event Level	Contact Informatica Support.
CoreApi-10489-13: lbm_↩winevlog_report_event(): could not ReportEvent	Windows error while sending to event log	Contact Informatica Support.
CoreApi-10489-20: lbm_winevlog() buffer is NULL	Error no buffers available for submitting event log messages	Contact Informatica Support.

CoreApi-10489-7: lbm_winevlog() Couldn't grab mutex	Error waiting for mutex	Contact Informatica Support.
CoreApi-10489-8: lbm_winevlog(): Unable to release mutex	Error releasing Mutex	Contact Informatica Support.
CoreApi-10489-9: lbm_winevlog(): Unable to release mutex	Error releasing mutex	Contact Informatica Support.
CoreApi-10492-2: address string conversion with CIDR format (IP/Mask) is not yet supported by lbm_resolve_ipv4_addr_str()	IP adresses in quad-dotted notation is supported however, CIDR (Classless Inter-Domain Routing) IP/Mask notation is not currently supported.	Use a different function to parse CIDR strings
CoreApi-10528-1: ssrc must be valid	The ssrc parameter supplied to a smart source get available data space call was NULL.	The ssrc parameter must be a pointer to a valid lbm smart source object.
CoreApi-10528-2: The smart source p transport's maximum datagram size is too small	The configured LBM and application specified message headers exceeds the transport's datagram maximum size.	Increase the transport's data maximum size, or reduce the number of message properties, or eliminate spectrum channel.
CoreApi-10528-5: user supplied buffer pointer is invalid	A smart source call specified a NULL user supplied buffer pointer.	Ensure that the pointer to the user supplied buffer is valid.
CoreApi-10558-1: optlen incorrect size	The smart_src_enable_transport_compatibility value contained an incorrect length	The smart_src_enable_transport_compatibility should be of sizeof(int)
CoreApi-10558-2: optval must be 0 or 1	The smart_src_enable_transport_compatibility did not contain a positive integer	The smart_src_enable_transport_compatibility must be zero or 1
CoreApi-10558-3: optval too large	The smart_src_enable_transport_compatibility must be zero or 1	The smart_src_enable_transport_compatibility must be zero or 1
CoreApi-10558-4: optval not numeric	The smart_src_enable_transport_compatibility value is not numeric	The smart_src_enable_transport_compatibility must be a numeric value of 0 or 1
CoreApi-10558-5: optval must be 0 or 1	The smart_src_enable_transport_compatibility did not contain a positive integer	The smart_src_enable_transport_compatibility must be zero or 1
CoreApi-10558-6: optval too large	The smart_src_enable_transport_compatibility must be zero or 1	The smart_src_enable_transport_compatibility must be zero or 1
CoreApi-10558-7: optlen incorrect size	The size of the option was too large or too small	The smart_src_enable_transport_compatibility must be sizeof(int)
CoreApi-10558-8: optlen too small	The size of the option buffer was too small to contain the option	The smart_src_enable_transport_compatibility optlen must be at least 80
CoreApi-10571-1: reqp must be valid	Invalid Request object	reqp must not be NULL
CoreApi-10571-2: proc must be valid	Invalid pointer to function to call when responses come in for this request	proc must not be NULL
CoreApi-10571-3: event queues are not supported	Smart sources do not support event queues at this time.	evq parameter must be NULL.
CoreApi-10571-4: Spectrum channel not supported	The Spectrum channel is not supported with smart source send request.	Do not set exinfo flags to LBM_SSRC_SEND_EX_FLAG_CHANNEL.

CoreApi-10571-5: Messages properties not supported	The Messages properties is not supported with smart source send request.	Do not set exinfo flags to LBM_S↩ SRC_SEND_EX_FLAG_PROPE↩ RTIES.
CoreApi-10571-6: The message len (d) exceeds max length (d) bytes.	Message fragmentation is not supported with smart source send request.	Either reduce the message length or tune max datagram size and smart_src_max_message_length. See **Smart Source Message Buffers** for more information on the smart source fragmentation
CoreApi-10679-1: lbm_socket_↩ send bad channel: p	A DBL call to get peer ip address and port was made with a bad channel specified.	Contact Informatica support.
CoreApi-10684-1: optlen incorrect size (file_descriptor_↩ management_behavior)	Attempted to set option file_↩ descriptor_management_behavior with an incorrect optlen size.	Optlen must be size of int.
CoreApi-10684-2: value not supported for file_descriptor_↩ management_behavior	Option file_descriptor_↩ management_behavior is not set to a valid value.	Set the file_descriptor_↩ management_behavior to LB↩ M_CTX_ATTR_FD_MANAG↩ EMENT_BEHAVIOR_PEND or LBM_CTX_ATTR_FD_MANAGE↩ MENT_BEHAVIOR_BUSY_WAIT.
CoreApi-10684-3: optval not understood (file_descriptor_↩ management_behavior)	Option file_descriptor_↩ management_behavior must be set to pend or busy_wait.	Set string option to pend or busy↩ _wait.
CoreApi-10684-4: optlen for get operation incorrect size (file_descriptor_management_↩ behavior)	Attempted to get option file_↩ descriptor_management_behavior with an incorrect optlen size.	Optlen must be size of int.
CoreApi-10684-5: optlen for string get too small (file_descriptor_↩ management_behavior)	The size of the buffer for the string get (file_descriptor_management↩ _behavior) was less than the minimum buffer size required.	Make sure the buffer is large enough.
CoreApi-10713-1: Could not find function s in s	UM dynamic loading of an SSL function failed. SSL cannot be used.	Ensure that a proper version of S↩ SL exists. See documentation for supported versions.
CoreApi-10713-2: Could not load library s	UM dynamic loading of the SSL library failed. SSL cannot be used.	Ensure that a proper version of the SSL libary exists. See documentation for supported versions.
CoreApi-10713-3: Could not load library s	UM dynamic loading of the Crypto library failed. SSL cannot be used.	Ensure that a proper version of the Crypto libary exists. See documentation for supported versions.
CoreApi-10713-4: An error ocurred during initialization of a TLS configured context: s	Initialization of SSL failed, but the user configured the LBM context to use TLS.	Check OpenSSL library version and availability.
CoreApi-10724-1: optlen incorrect size	The user passed in a value of optlen that did not match up to the option's expected type's size.	Check the application code to be sure that the optlen value is set to the size of int.
CoreApi-10724-2: resolver service interest mode must be 0 or 1	Resolver service interest mode can only be either filter or flood.	Set the optval value to 1 for filter mode and 0 for flood mode.
CoreApi-10724-3: optlen incorrect size	Checks whether optlen is an appropriate size and returns to caller if optlen size is incorrect.	Check the application code to be sure that the optlen value is set to the size of lbm_uint8_t.
CoreApi-10724-5: resolver service interest mode must be flood or filter	Resolver service interest mode can either be filter or flood.	Set the optval value to filter or flood.
CoreApi-10724-6: optlen too small	The buffer given is too small to write the option value to.	Check that the size of the buffer being passed in is at least 80 bytes.

CoreApi-10888-01: monitor_↩ format option is not supported	Invalid monitor_format is configured.	User needs to select a valid option for monitor_format
CoreApi-10888-20: optlen must be size of int for monitor_format	Size of optlen was incorrect for setting integer option	optlen must be size of int
CoreApi-10888-21: optval must be 1 or 2 for monitor_format	Invalid value for optval	optval must be 1 or 2
CoreApi-10888-22: optval must be csv or pb for monitor_format	Invalid value for optval	optval must be csv or pb
CoreApi-10888-23: optlen must be size of int for monitor_format	Size of optlen was incorrect	optlen size must be size of int
CoreApi-10888-24: optlen must be at least 80 for monitor_format	Size of optlen was too small	Size of optlen must be at least 80
CoreApi-10888-30: context monitor format opts value cannot start with a ""	The context monitor format options string is malformed.	Remove the quote marks from the context monitor format options string, if any.
CoreApi-10888-31: context monitor format opts value cannot start with a ""	The context monitor format options string is malformed.	Remove the quote marks from the context monitor format options string, if any.
CoreApi-10888-32: optlen incorrect size	The provided buffer is too small to hold the option value.	Provide a larger buffer.
CoreApi-10888-33: optlen incorrect size	The provided buffer is too small to hold the option value.	Provide a larger buffer.
CoreApi-10888-364: optlen must be size of int for monitor_format	Size of optlen was incorrect for setting integer option	optlen must be size of int
CoreApi-10888-365: optval must be 1 or 2 for monitor_format	Invalid value for optval	optval must be 1 or 2
CoreApi-10888-366: optval must be csv or pb for monitor_format	Invalid value for optval	optval must be csv or pb
CoreApi-10888-367: optlen must be size of int for monitor_format	Size of optlen was incorrect	optlen size must be size of int
CoreApi-10888-368: optlen must be at least 80 for monitor_format	Size of optlen was too small	Size of optlen must be at least 80
CoreApi-10888-369: monitor_↩ format option is not supported	Invalid monitor_format option is configured.	User needs to select a valid option for monitor_format
CoreApi-10888-370: event queue monitor format opts value cannot start with a ""	The event queue monitor format options string is malformed.	Remove the quote marks from the event queue monitor format options string, if any.
CoreApi-10888-371: event queue monitor format opts value cannot start with a ""	The event queue monitor format options string is malformed.	Remove the quote marks from the event queue monitor format options string, if any.
CoreApi-10888-372: optlen incorrect size	The provided buffer is too small to hold the option value.	Provide a larger buffer.
CoreApi-10888-373: optlen incorrect size	The provided buffer is too small to hold the option value.	Provide a larger buffer.
CoreApi-10995-4300: Can't get address of ByteBuffer [s:d] - may not be a direct ByteBuffer	The ByteBuffer was not valid.	The ByteBuffer must be a direct ByteBuffer.
CoreApi-10995-4310: Can't allocate memory [s:d]	The system was not able to allocate the amount of memory requested.	The physical memory on the machine may be over committed; try moving some applications to another machine.

CoreApi-10995-4320: Can't allocate memory [s:d]	The system was not able to allocate the amount of memory requested.	The physical memory on the machine may be over committed; try moving some applications to another machine.
CoreApi-10996-1: resolver↩_disable_udp_topic_resolution optlen incorrect size	The option resolver_disable_udp↩_topic_resolution size is incorrect.	The expected size is sizeof(int)
CoreApi-10996-2: resolver↩_disable_udp_topic_resolution optval must be 0 or 1	The option resolver_disable_udp↩_topic_resolution must be 0 or 1.	Set the value to 0 or 1.
CoreApi-10996-3: resolver↩_disable_udp_topic_resolution optval not numeric	The option resolver_disable_udp↩_topic_resolution is not set to a numeric value.	Set the option to a numeric value.
CoreApi-10996-4: resolver↩_disable_udp_topic_resolution optval must be 0 or 1	The option resolver_disable_udp↩_topic_resolution must be 0 or 1.	Set the value to 0 or 1.
CoreApi-10996-5: resolver↩_disable_udp_topic_resolution optlen incorrect size	The option resolver_disable_udp↩_topic_resolution size is incorrect.	The expected size is sizeof(int)
CoreApi-10996-6: resolver↩_disable_udp_topic_resolution optlen too small	The option resolver_disable_udp↩_topic_resolution string length is too small.	The expected string length is at least 80
CoreApi-11050-1: optlen incorrect size	Setting of the dynamic_↩fragmentation_reduction configuration option is using the wrong size. Size is "int".	User needs to use the correct size when setting the configuration option.
CoreApi-11050-2: optval must be 0 or 1	The dynamic_fragmentation_↩reduction configuration option must be a 0 or 1.	The user should set the option to 0 or 1.
CoreApi-11050-3: optval not numeric	Setting of the dynamic_↩fragmentation_reduction configuration option is using a string value that is not a number.	The user needs to pass a number in the string.
CoreApi-11050-4: optval must be 0 or 1	The dynamic_fragmentation_↩reduction configuration option must be a 0 or 1.	The user should set the option to 0 or 1.
CoreApi-11050-5: optlen incorrect size	Getting the dynamic_↩fragmentation_reduction configuration option is using the wrong size. Size is "int".	User needs to use the correct size when getting the configuration option.
CoreApi-11050-6: optlen too small	Getting the dynamic_↩fragmentation_reduction configuration option is using a string that is too small. Minimum string size is 80 bytes.	User needs to use the correct string size when getting the configuration option.
CoreApi-11302-1: optlen incorrect size	The user passed in a value of optlen that did not match up to the option's expected type's size.	Check the application code to be sure the correct option type (int, long, etc.) is being passed in.
CoreApi-11302-20: request_tcp_↩activity_timeout not supported on this platform	The request_tcp_activity_timeout option is set, but SO_KEEPALIVE is not supported on this OS.	Don't set the request_tcp_activity↩_timeout option on this OS.
CoreApi-11302-21: request_tcp_↩activity_timeout is set to less than the supported value of d	The request_tcp_activity_timeout option is set less than the supported value.	Set the request_tcp_activity↩_timeout option to at least the supported value.

CoreApi-11302-22: request_tcp_activity_timeout not supported on this platform	The request_tcp_activity_timeout option is set, but SO_KEEPALIVE is not supported on this OS.	Don't set the request_tcp_activity_timeout option on this OS.
CoreApi-11302-23: request_tcp_activity_timeout is set to less than the supported value of d	The request_tcp_activity_timeout option is set less than the supported value.	Set the request_tcp_activity_timeout option to at least the supported value.
CoreApi-11302-24: response_tcp_activity_timeout not supported on this platform	The response_tcp_activity_timeout option is set, but SO_KEEPALIVE is not supported on this OS.	Don't set the response_tcp_activity_timeout option on this OS.
CoreApi-11302-25: response_tcp_activity_timeout is set to less than the supported value of d	The response_tcp_activity_timeout option is set less than the supported value.	Set the response_tcp_activity_timeout option to at least the supported value.
CoreApi-11302-26: response_tcp_activity_timeout not supported on this platform	The response_tcp_activity_timeout option is set, but SO_KEEPALIVE is not supported on this OS.	Don't set the response_tcp_activity_timeout option on this OS.
CoreApi-11302-27: response_tcp_activity_timeout is set to less than the supported value of d	The response_tcp_activity_timeout option is set less than the supported value.	Set the response_tcp_activity_timeout option to at least the supported value.
CoreApi-11302-2: optval not numeric	A number was expected for this config option, but something else was pased in.	Check the code or config file that sets this option; make sure it is passing in a string with a number in it.
CoreApi-11302-3: optlen incorrect size	The user passed in a value of optlen that did not match up to the option's expected type's size.	Check the application code to be sure the correct option type (int, long, etc.) is being passed in.
CoreApi-11302-4: optlen too small	The buffer given is too small to write the option value to.	Check that the size of the buffer being passed in is at least LBM_MIN_SGET_OPTLEN bytes.
CoreApi-11302-5: optlen incorrect size	The user passed in a value of optlen that did not match up to the option's expected type's size.	Check the application code to be sure the correct option type (int, long, etc.) is being passed in.
CoreApi-11302-6: optval not numeric	A number was expected for this config option, but something else was pased in.	Check the code or config file that sets this option; make sure it is passing in a string with a number in it.
CoreApi-11302-7: optlen incorrect size	The user passed in a value of optlen that did not match up to the option's expected type's size.	Check the application code to be sure the correct option type (int, long, etc.) is being passed in.
CoreApi-11302-8: optlen too small	The buffer given is too small to write the option value to.	Check that the size of the buffer being passed in is at least LBM_MIN_SGET_OPTLEN bytes.
CoreApi-11325-1: Smart source send bytes (d) exceeds flight size bytes maximum, unable to send.	Attempted to send a single message with length greater than the maximum limit while using UMP flight size blocking behavior. The length includes customer payload but might also include additional data such as message properties.	Send smaller messages or increase source ume_flight_size_bytes option.
CoreApi-11325-2: Request send bytes (d) exceeds flight size bytes maximum, unable to send.	Attempted to send a single message with length greater than the maximum limit while using UMP flight size blocking behavior. The length includes customer payload but might also include additional data such as message properties.	Send smaller messages or increase source ume_flight_size_bytes option.

CoreApi-11416-1: ctx must be valid	lbm_context_set_nak_cutoff called with a NULL context pointer	Specify a valid context pointer
CoreApi-11416-2: ctx is reactor only	lbm_context_set_nak_cutoff called with a reactor only context pointer	Specify a valid context pointer
CoreApi-3288-1: optlen incorrect size	Attempted to set wildcard receiver attribute "hf_receiver" using the wrong size optlen.	The parameter "optlen" must be the size of an integer.
CoreApi-3288-2: optval must be 0 or 1	Attempted to set wildcard receiver attribute "hf_receiver" using an invalid value.	The only valid values are 0 and 1.
CoreApi-3288-3: optval not numeric	Attempted to set wildcard receiver attribute "hf_receiver" using a string that is not a number.	The parameter "optval" must be a string representation of a number.
CoreApi-3288-4: optval must be 0 or 1	Attempted to set wildcard receiver attribute "hf_receiver" using an invalid value.	The only valid values are 0 and 1.
CoreApi-3288-5: optlen incorrect size	Attempted to get wildcard receiver attribute "hf_receiver" using the wrong size optlen.	The parameter "optlen" must be the size of an integer.
CoreApi-3288-6: optlen too small	Attempted to get wildcard receiver attribute "hf_receiver" using a string length that is too long.	The parameter "optlen" must be less than 80.
CoreApi-5230-10: invalid ume↩ _message_stability_timeout_↩ behavior specified	invalid ume_message_stability_↩ timeout_behavior setting	currently the only valid setting is 0
CoreApi-5230-11: optval not numeric	optval not numeric	optval is not a number
CoreApi-5230-12: invalid ume↩ _message_stability_timeout_↩ behavior specified	invalid ume_message_stability_↩ timeout_behavior setting	currently the only valid setting is 0
CoreApi-5230-13: optlen incorrect size	optlen incorrect size	optlen should be of size lbm_↩ uint8_t
CoreApi-5230-14: optlen too small	optlen too small	optlen should be at least LBM_M↩ IN_SGET_OPTLEN
CoreApi-5230-1: optlen incorrect size	optlen incorrect size	Should have passed in a lbm_↩ uint32_t.
CoreApi-5230-2: optval not numeric	optval not numeric	optval must be a number.
CoreApi-5230-3: optlen incorrect size	optlen incorrect size	optlen must be a lbm_uint32_t.
CoreApi-5230-4: optlen too small	optlen too small	optlen should be at least LBM_M↩ IN_SGET_OPTLEN
CoreApi-5230-5: optlen incorrect size	optlen incorrect size	should have passed in a lbm_↩ uint32_t
CoreApi-5230-6: optval not numeric	optval not numeric	optval must be a number.
CoreApi-5230-7: optlen incorrect size	optlen incorrect size	optlen must be a lbm_uint32_t
CoreApi-5230-8: optlen too small	optlen too small	optlen should be at least LBM_M↩ IN_SGET_OPTLEN
CoreApi-5230-9: optlen incorrect size	optlen incorrect size	optlen should be a lbm_uint8_t

CoreApi-5243-1: TCP server socket: s	An error was returned from the OS while trying to create a socket (T↩CP). Refer to the OS error number and message given after the UMS message "TCP server socket".	
CoreApi-5243-2: TCP server listen: s	An error was returned from the OS while trying to listen to a socket (T↩CP). Refer to the OS error number and message given after the UMS message "TCP server listen".	
CoreApi-5243-3: TCP server getsockname: s	An error was returned from the OS while trying to get the name of a socket (TCP). Refer to the OS error number and message given after the UMS message "TCP server getsockname".	
CoreApi-5333-1: ttl value d invalid, must be between 0 and 255.	Value passed in for resolver_↩multicast_ttl was not a valid value.	Review the configuration file and specify a valid value (0 - 255).
CoreApi-5402-2: src must be valid	Send was called using a NULL src pointer.	Use a valid source pointer to send calls.
CoreApi-5402-3: exinfo flags cannot have both HF 32 and HF 64 set	Hot failover send was called using an exinfo that had both HF 32 and HF 64 bit flags set.	Ensure exinfo is valid and has one or neither HF bit size flag set before calling send
CoreApi-5402-4: 32 bit hf src cannot send non-32bit sequence number	A source that previously sent 32 bit hot failover sequence numbers is attempting to send a non-32 bit hot failover sequence number.	Ensure that the parameter "exinfo" has the correct HF flags set
CoreApi-5402-5: 64 bit hf src cannot send non-64bit sequence number	A source that previously sent 64 bit hot failover sequence numbers is attempting to send a non-64 bit hot failover sequence number.	Ensure that the parameter "exinfo" has the correct HF flag set
CoreApi-5434-1: Can't allocate memory [s:d]	UMQ ran out of memory while creating a queue name string.	
CoreApi-5434-2: Can't allocate memory [s:d]	UMQ ran out of memory while creating a queue message list callback object.	
CoreApi-5434-3: Can't allocate memory [s:d]	UMQ ran out of memory while creating a queue name string.	
CoreApi-5434-4: Can't allocate memory [s:d]	UMQ ran out of memory while creating a queue message retrieve callback object.	
CoreApi-5434-5: Could not create source string [s:d]	UMQ ran out of memory while creating a source string.	
CoreApi-5434-6: Could not create topic string [s:d]	UMQ ran out of memory while creating a topic string.	
CoreApi-5434-7: Can't allocate memory [s:d]	UMQ ran out of memory while creating a queue name string.	
CoreApi-5434-8: Can't allocate memory [s:d]	UMQ ran out of memory while creating a queue topic list callback object.	
CoreApi-5480-10: could not create inactive_loss_rec_queue [s:d]	Internal error while attempting to create an internal data structure. Most likely the result of insufficient memory.	Contact Informatica support.

CoreApi-5480-11: could not create active_loss_rec_queue [s:d]	Internal error while attempting to create an internal data structure. Most likely the result of insufficient memory.	Contact Informatica support.
CoreApi-5480-12: could not create unavailable_loss_rec_queue [s:d]	Internal error while attempting to create an internal data structure. Most likely the result of insufficient memory.	Contact Informatica support.
CoreApi-5480-13: rxr_ctlr destination list is NULL	Internal error. Specified rxr_ctlr has not been fully created.	Contact Informatica support.
CoreApi-5480-14: lbm_rxr_↩ request_t already cancelled	Internal error. Attempted duplicate request cancellation.	Contact Informatica support.
CoreApi-5480-15: unable to insert loss_rec into loss_rec_map	Internal error while attempting to create an internal data structure. Most likely the result of insufficient memory.	Contact Informatica support.
CoreApi-5480-16: unable to insert loss_rec into inactive loss rec queue	Internal error while attempting to create an internal data structure. Most likely the result of insufficient memory.	Contact Informatica support.
CoreApi-5480-17: unable to insert loss_rec into inactive loss rec queue	Internal error while attempting to create an internal data structure. Most likely the result of insufficient memory.	Contact Informatica support.
CoreApi-5480-18: unable to insert loss_rec into loss_rec_map	Internal error while attempting to create an internal data structure. Most likely the result of insufficient memory.	Contact Informatica support.
CoreApi-5480-19: unable to insert loss_rec into inactive loss rec queue	Internal error while attempting to create an internal data structure. Most likely the result of insufficient memory.	Contact Informatica support.
CoreApi-5480-20: unable to insert loss_rec into inactive loss rec queue	Internal error while attempting to create an internal data structure. Most likely the result of insufficient memory.	Contact Informatica support.
CoreApi-5480-21: unable to insert loss_rec into inactive loss rec queue	Internal error while attempting to create an internal data structure. Most likely the result of insufficient memory.	Contact Informatica support.
CoreApi-5480-22: unable to insert loss_rec into inactive loss rec queue	Internal error while attempting to create an internal data structure. Most likely the result of insufficient memory.	Contact Informatica support.
CoreApi-5480-23: unable to insert loss_rec into loss rec queue	Internal error while attempting to create an internal data structure. Most likely the result of insufficient memory.	Contact Informatica support.
CoreApi-5480-24: unable to insert loss_rec into inactive loss rec queue	Internal error while attempting to create an internal data structure. Most likely the result of insufficient memory.	Contact Informatica support.
CoreApi-5480-25: unable to reschedule rxr_ctlr timer	Internal error while attempting to create an internal data structure. Most likely the result of insufficient memory.	Contact Informatica support.

CoreApi-5480-26: unable to insert loss_rec into unavailable loss rec queue	Internal error while attempting to create an internal data structure. Most likely the result of insufficient memory.	Contact Informatica support.
CoreApi-5480-27: could not create loss ASL [s:d]	Internal error while attempting to create an internal data structure. Most likely the result of insufficient memory.	Contact Informatica support.
CoreApi-5480-28: could not insert rcvdc_loss_rec ASL map [s:d]	Internal error while handling a detected gap in data.	Contact Informatica support.
CoreApi-5480-5: unable to insert o_entry into omap->asl	Internal error while attempting to handle an out of order message.	Contact Informatica support.
CoreApi-5480-7: unable to insert o_entry into omap->asl	Internal error while attempting to handle detected loss.	Contact Informatica support.
CoreApi-5480-8: min_↩unavailable_delay must be smaller than the request_generation_ivl	Internal error while creating an rxr_ctlr. Should never happen.	Contact Informatica support.
CoreApi-5480-9: could not create rxr_loss_rec_map ASL [s:d]	Internal error while attempting to create an internal data structure. Most likely the result of insufficient memory.	Contact Informatica support.
CoreApi-5539-1: Can't allocate per-send object node; message not sent [s:d]	Could not set up source per send data in jni when calling HF send reset.	Ensure that correct exinfo is being used and that sufficient memory is available.
CoreApi-5688-1246: session id not a number	The provided session ID was invalid.	Specify a session ID that fits one of the following formats: A hexadecimal value prefixed by 0x, an octal value prefixed by 0, or a decimal value. The value must be smaller than 0xFFFFFFFFFFFFF↩FFF regardless of representation.
CoreApi-5688-1390: session id not a number	The provided session ID was invalid.	Specify a session ID that fits one of the following formats: A hexadecimal value prefixed by 0x, an octal value prefixed by 0, or a decimal value. The value must be smaller than 0xFFFFFFFFFFFFF↩FFF regardless of representation.
CoreApi-5688-1885: opmode must be sequential	This is an invalid use of the **lbm_context_process_events()** or lbmContextProcessEvents(). Calling **lbm_context_process_↩events()** or lbmContextProcess↩Events() for a context running in embedded mode. This will simply print the log message and return immediately.	**lbm_context_process_events()** or lbmContextProcessEvents() should get called only for sequential mode. See the UM Configuration Guide for high level guidance on configuring Ultra Messaging objects.
CoreApi-5688-2014: optval not numeric	Value passed in for resolver_↩multicast_ttl was not numeric.	Review the configuration file and specify a valid numeric value for the option (0 - 255).

CoreApi-5688-2767: session id not a number	The provided session ID was invalid.	Specify a session ID that fits one of the following formats: A hexadecimal value prefixed by 0x, an octal value prefixed by 0, or a decimal value. The value must be smaller than 0xFFFFFFFFFFFFFF↩FFF regardless of representation.
CoreApi-5688-2859: context name too long	The supplied context name is invalid because it is too long.	Context names must not exceed 128 characters in length.
CoreApi-5688-2874: optval is malformed	The unicast resolver daemon specification string format is as follows: [Interface[:LocalPort]->]Daemon↩IP:RemotePort where Interface and LocalPort refer the local host interface and port, the DaemonIP refers to the resolver daemon's IP address, and the RemotePort refers to the resolver daemon's UDP port.	Provide a valid resolver daemon specification.
CoreApi-5688-2875: optval is malformed	The unicast resolver daemon specification string format is as follows: [Interface[:LocalPort]->]Daemon↩IP:RemotePort where Interface and LocalPort refer the local host interface and port, the DaemonIP refers to the resolver daemon's IP address, and the RemotePort refers to the resolver daemon's UDP port.	Provide a valid resolver daemon specification.
CoreApi-5688-3015: send would block	The application attempted a non-blocking send of a message on a transport that is blocked due to exceeding the transport's rate limit. The message was not sent, and was not queued for future sending.	The application can enable source events and wait for the LBM_↩SRC_EVENT_WAKEUP event, or it can use blocking sends, or it can simply retry the send after the rate limiter interval expires. Alternatively, consider increasing the rate limit and/or rate interval. See **Transport Rate Control**.
CoreApi-5688-3021: The LBM↩_MSG_END_BATCH was set before the LBM_MSG_START_BA↩TCH flag. (Note:Explicit batching is deprecated as of UM 6.10).	The LBM_MSG_END_BATCH flag was set before the LBM_MSG_S↩TART_BATCH flag	Explicit batching is deprecated as of UM 6.10
CoreApi-5688-3040: Can not specify a negative number for inflight messages	Attempting to set the flight size of messages to a negative number	Ensure a positive integer for inflight messages is returned from the set flight size callback
CoreApi-5688-3041: Cannot specify a negative number for inflight messages	Attempting to set the flight size of messages to a negative number	Ensure a positive integer for inflight messages is returned from the set flight size callback
CoreApi-5688-3043: inflight must be valid	inflight parameter was NULL	inflight must be a valid pointer
CoreApi-5688-3139: Round-Robin must have no groups specified	Store groups have been specified, but the ume_store_behavior option is set to Round-Robin.	Change the ume_store_behavior option to quorum-consensus or remove any settings specifying ume_store_group.

CoreApi-5688-3140: Store u has invalid address	INADDR_ANY (0.0.0.0) was set for the ume_store configuration option.	Specify a valid IP address as configured in the umestored daemon's config file.
CoreApi-5688-3151: Group u does not have enough stores specified	UMP source configured "source ume_store_group GroupIDX:↩ GroupSZ" with certain number of GroupSZ (stores) but did not specify enough stores for GroupIDX with the "source ume_store_↩ name" or "source ume_store" configuration options.	Correct configuration file to match the GroupSZ with the actual number of stores specified for that GroupIDX.
CoreApi-5688-3226: TCP server socket: s	An error was returned from the OS while trying to create a socket (T↩ CP). Refer to the OS error number and message given after the U↩ MS message "could not create T↩ CP server socket".	
CoreApi-5688-3227: TCP server SO_REUSEADDR: s	An error was returned from the OS while trying to set option of a socket (TCP). Refer to the OS error number and message given after the UMS message "TCP server SO↩ _REUSEADDR".	
CoreApi-5688-3229: TCP server SO_EXCLUSIVEADDR: s	An error was returned from the OS while trying to set option of a socket (TCP). Refer to the OS error number and message given after the UMS message "TCP server SO↩ _EXCLUSIVEADDR".	
CoreApi-5688-3230: could not find open TCP server port in range [d-d]	An error was returned from the OS while trying to bind a socket (T↩ CP). This error indicates that there are no free ports in the range of ports denoted by the transport_↩ tcp_port_low and transport_tcp_↩ port_high configuration options.	If the range of ports is small, consider increasing the range of ports available to this UM application by making the appropriate configuration changes. If the range of ports is large, consider moving some applications which use ports in this port range to another system.
CoreApi-5688-3231: TCP server bind (port=d): s	An error was returned from the OS while trying to bind a socket (T↩ CP). This error indicates that the port specified by the transport_↩ tcp_port configuration option is in use.	If this error was encountered on a restart, consider specifying tcp↩ _reuseaddr (Windows users are recommended to the configuration guide for transport_tcp_reuseaddr (source))
CoreApi-5688-3232: TCP server getsockname: s	An error was returned from the OS while trying to get the name of a socket (TCP). Refer to the OS error number and message given after the UMS message "TCP server getsockname".	
CoreApi-5688-3233: TCP server listen: s	An error was returned from the OS while trying to listen to a socket (T↩ CP). Refer to the OS error number and message given after the UMS message "TCP server listen".	

CoreApi-5688-3268: multicast receive bind (port = d, multicast group = s): s	An error occurred while trying to bind to the requested ip and port. The last part of this message contains the OS error code and associated text.	Consult your OS documentation for resolutions based on the error code.
CoreApi-5688-3287: could not find open unicast source port in range [d-d]	Could not bind to a unicast port due to ports already being used in the given range.	Update the UM configuration file to modify or include different ports for the options transport_lbtrm_↩source_port_low and/or transport↩_lbtrm_source_port high.
CoreApi-5688-3303: unicast bidir bind (port=d): s	An error was returned from the OS while trying to bind the socket to the given port.	Refer to the OS error number and message given after the UMS message "could not bind, port xxxxx, on unicast bidir socket
CoreApi-5688-3320: lbm_socket↩_recv recv/recvfrom: s	An error was returned from the OS while trying a recv or recvfrom socket call. Refer to the OS error number and message.	
CoreApi-5688-3332: lbm_socket↩_send send/sendto (ip address: s, port d): s	An error occurred while trying to send to the specified ip and port. The last part of this message contains the OS error code and associated text.	Check configuration option settings.
CoreApi-5688-3337: lbm_socket↩_sendb send/sendto: s	An error occurred while sending. The message will contain addition specific information, supplied by the operating system.	This is a platform specific error; please use the operating system's error code and description to further understand the circumstances of the error.
CoreApi-5688-3468: could not find the given source transport session.	The transport session for which statistics were requested is no longer valid.	The receiving application should monitor the LBM_MSG_EOS message for EOS on the transport session. EOS indicates the transport session is no longer valid. Please see KB 234278 for a more detailed explanation.
CoreApi-5688-3545: wildcard pattern type d not supported	The specified pattern type for the wildcard receiver was invalid.	Refer to pattern_type in the configuration guide, set the appropriate value and retry the application.
CoreApi-5688-3772: FD event already defined	Trying to register a handle with event flag(s) (LBM_FD_EVENT_↩∗) already registered for that same handle.	If using lbm_register_fd/lbm_↩cancel_fd APIs in UM application, review usage logic. Otherwise, contact Informatica support.
CoreApi-5688-387: monitor_↩transport option is not supported	Invalid monitor_transport option is configured.	User needs to select a valid option for monitor_transport
CoreApi-5688-4087: XML configuration has already been loaded.	An XML configuration has already been loaded via UMM and can not be overridden by loading a different XML configuration.	Modify the application to not attempt to load a second XML configuration.
CoreApi-5688-4089: error parsing application name 's'. View previous error messages to determine the source of the problem	A problem was detected while parsing the XML file. The particular error was reported at the time the problem was detected	View previous log messages to determine which config value was determined to be erroneous
CoreApi-5688-4092: XML configuration has already been loaded.	An XML configuration has already been loaded via UMM and can not be overridden by loading a different XML configuration.	Modify the application to not attempt to load a second XML configuration.

CoreApi-5688-4093: error parsing XML data	The XML configuration received from UMM could not be parsed.	Previous error messages should contain the reason for the error. Correct the configuration in UMM and retry the application.
CoreApi-5688-4094: error parsing application name 's'	The XML configuration for the application received from UMM could not be parsed.	Previous error messages should contain the reason for the error. Correct the configuration in UMM and retry the application.
CoreApi-5688-4110: no default multicast interface available	Application exits when multicast interface is not specified in configuration file.	To avoid the application exiting, a default multicast interface must be specified and if there is none, setting it to 127.0.0.1 allows the application to continue to work.
CoreApi-5688-4243: lbm_src_↩ topic_attr_" #name "_set:s	An error was returned when an attempt was made to set an attribute. The error message returned is included in the text of this message.	
CoreApi-5688-4251: could not insert lbm_umq_rcvdc_t rcv list ASL [s:d]	Internal error while inserting a new receiver into the receiver ASL list.	Contact Informatica support.
CoreApi-5688-4554: Can't allocate memory [s:d]	The LBM JNI library could not allocate a string object.	This usually indicates a severe out of memory condition.
CoreApi-5688-606: LBT-IPC: failed to allocate shared memory s (d)	A shared memory object for the I↩ PC transport could not be created. This could be caused by a permission error or no more resources. Please refer to the OS error number given.	
CoreApi-5688-608: LBT-IPC: failed to map shared memory (d)	An error occurred trying to map a pointer to the IPC shared memory region. Please refer to the OS error number given.	
CoreApi-5688-610: LBT-IPC: can not initialize shared semaphore (d)	An error occurred when initializing the shared semaphore used to ensure mutual exclusion while accessing the IPC shared memory region. Please refer to the OS error number given.	
CoreApi-5688-611: LBT-IPC: failed to allocate shared memory s (d)	A shared memory object for the I↩ PC transport could not be created. This could be caused by a permission error or no more resources. Please refer to the OS error number given.	
CoreApi-5688-612: LBT-IPC: failed to map shared memory s (d)	An error occurred trying to map a pointer to the IPC shared memory region. Please refer to the OS error number given.	
CoreApi-5688-613: LBT-IPC: can not create shared Mutex (d)	The shared Mutex used to ensure mutual exclusion while accessing the IPC shared memory region could not be created. Please refer to the OS error number given.	

CoreApi-5688-64: config file: s line d: s	The supplied configuration option is not recognized by the system.	UM executes a case insensitive comparison for an exact match of configuration options. Check for correct spelling and proper use of underscore characters.
CoreApi-5688-706: Not currently registered with enough UME stores	The source tried to send a message while not registered with a quorum of stores.	Monitor the source_event_function for changes in quorum status. Please see KB article 304595 for more details.
CoreApi-5688-708: UMQ queue is marked inactive	Every source and receiver periodically checks that every queue it is registered with is still active, by checking if it has received a recent advertisement from the queue. If the activity timeout for the queue is exceeded before an advertisement is received and checked by the source, the source will mark the queue as inactive, and will no longer attempt to publish messages to that queue until it becomes active again.	Check why the source has not marked that is has received an advertisement. It could be a delay on the queue, on the network, or on the source itself.
CoreApi-5760-1: receiver must be an observer receiver (set umq_↩ queue_participation to 2)	lbm_rcv_umq_queue_msg_↩ retrieve was called using a normal receiver for the rcv parameter. Only observer receivers (receivers with the "receiver umq_queue_↩ participation" option set to "2") may be used with this API.	
CoreApi-5760-2: receiver must be an observer receiver (set umq_↩ queue_participation to 2)	lbm_rcv_umq_queue_msg_↩ list was called using a normal receiver for the rcv parameter. Only observer receivers (receivers with the "receiver umq_queue_↩ participation" option set to "2") may be used with this API.	
CoreApi-5867-10: msg_sel argument must be non-NULL	The msg_sel argument that was passed was NULL	Ensure the msg_sel argument is not NULL so that it can be assigned the newly created message selector
CoreApi-5867-11: msg_sel argument must be non-NULL	The msg_sel argument that was passed was NULL	Ensure the msg_sel argument is not NULL because it is what will be deleted
CoreApi-5867-12: msg_sel argument must be non-NULL	The msg_sel argument that was passed was NULL	Ensure the msg_sel argument is not NULL
CoreApi-5867-14: error occurred parsing message selector string <s>	The message selector string is invalid or could not be parsed.	Check the UM Documenation for valid syntax.
CoreApi-5867-15: error occurred evaluating message selector string due to unknown property type [d] for property [s]	Message property type was invalid.	Verify that the message properties have not been corrupted.
CoreApi-5867-16: rcv cannot be configured with both message selector and spectrum channel behavior	A receiver was configured with both a message selector and channel behavior	Remove either the message selector or the channel behavior from the receiver attributes

CoreApi-5867-17: rcv cannot be configured with both message selector and spectrum channel	A receiver was configured with both a message selector and channel	Remove either the message selector or the channel
CoreApi-5867-18: rcv cannot be configured with both message selector and spectrum channel behavior	A receiver was configured with both a message selector and channel behavior	Remove either the message selector or the channel behavior from the receiver attributes
CoreApi-5867-1: optval must not be NULL	The optval passed in was a NULL pointer.	Ensure NULL is not passed as the value of the optval pointer because this is where the data will be copied
CoreApi-5867-2: optlen must not be NULL	The optlen passed in was a NULL pointer.	Ensure NULL is not passed as the value of the optlen pointer because this is needed to make sure the data can be copied
CoreApi-5867-3: optval is not long enough	Based on the optlen passed in, the data cannot be copied into optval due to its size	Ensure optval is large enought to hold the data (check the update optlen for the needed size)
CoreApi-6001-10: async operation canceled because connection with queue was lost	An outstanding asynchronous operation was canceled because the connection with the queue was lost, rendering the outstanding async operation unlikely to ever complete on its own.	This is normal behavior if a queue has been brought down on purpose; otherwise, check to see if the queue is overloaded and unresponsive or if there is a connectivity problem between the client application and the queue.
CoreApi-6001-11: could not allocate lbm_umq_rcvdc_t waiting command list [s:d]	The UMQ delivery controller's waiting command list could not be created.	This usually indicates severe resource exhaustion; check for out of memory errors.
CoreApi-6001-1: optlen incorrect size	The size of the option passed in is not the correct size for this option.	This is usually a coding mistake; check that the correct type is being used for this option.
CoreApi-6001-2: optval must be greater than 0	The UMQ command outstanding max passed in was 0, which is not a valid value.	Make sure the value given is > 0.
CoreApi-6001-3: UMQ command outstanding max not a number	The string representing the UMQ command outstanding max could not be parsed to find a number.	Check the string being passed in, make sure it's a number > 0.
CoreApi-6001-4: optval must be greater than 0	The string representing the UMQ command outstanding max was 0, which is not a valid value.	Check the string being passed in, make sure it's a number > 0.
CoreApi-6001-5: optlen incorrect size	The size of the option passed in is not the correct size for this option.	This is usually a coding mistake; check that the correct type is being used for this option.
CoreApi-6001-6: optlen too small	The size of the buffer passed in was less than the minimum buffer size required.	Make sure the buffer is large enough - at least LBM_MIN_SG↩ET_OPTLEN bytes in size.
CoreApi-6001-7: could not allocate lbm_umq_queue_t waiting cmd ID list [s:d]	UMS could not allocate a queue controller waiting command list. This probably means malloc failed or the system is otherwise out of resources.	This is likely the result of severe resource exhaustion; contact Informatica support.
CoreApi-6001-8: could not insert lbm_umq_queue_t CMD WAITING LIST [s:d]	A waiting command could not be enqueued onto the queue's waiting command list.	This is a severe problem and usually indicates resource exhaustion; check for out of memory conditions.

CoreApi-6001-9: could not insert lbm_umq_queue_t CMD ASL [s:d]	Attemping to take a waiting command off the waiting command list and put it in the active commands list failed.	This usually indicates resource exhaustion; check for out of memory conditions.
CoreApi-6020-10: Cannot increase inflight messages or bytes while decreasing the other	Attempting to increase the flight size messages or bytes and decrease the other.	Ensure that the inflight set callback returns a valid inflight structure, or call the method twice to set each one individually.
CoreApi-6020-11: Cannot increase inflight messages or bytes while decreasing the other	Attempting to increase the flight size messages or bytes and decrease the other.	Ensure that the inflight set callback returns a valid inflight structure, or call the method twice to set each one individually.
CoreApi-6020-12: Payload exceeds flight size bytes maximum, can not send.	Attempted to send a single message with payload length greater than the configured maximum allowed limit	Send smaller messages or increase source ume_flight_size_↩ bytes
CoreApi-6020-13: inflight parameter must be a valid pointer	inflight parameter was NULL	inflight must be a valid pointer
CoreApi-6020-14: RPP sources must also configure a non-zero value for ume_flight_size_bytes	Attempted to create a RPP enabled source without specifying a valid flight size bytes	Set "source ume_flight_size_↩ bytes" to be non-zero
CoreApi-6020-1: optlen incorrect size	optlen parameter is not the correct size	optlen should be the size of an lbm_uint64_t
CoreApi-6020-2: opval not numeric	optval parameter was not a string representation of a number	Ensure that the optval string is a unsigned number
CoreApi-6020-3: optval not a number	optval parameter was not a string representation of a number	Ensure that the optval string is a unsigned number
CoreApi-6020-4: optlen incorrect size	optlen parameter is not the correct size	optlen should be size of lbm_↩ uint64_t
CoreApi-6020-5: optlen too small	optlen parameter too small	Increase optlen size
CoreApi-6020-8: exinfo properties must be valid when LBM_SRC_S↩ END_EX_FLAG_PROPERTIES is set	Attempted send with message properties flag set, but exinfo->properties was NULL	Turn off message properties flag or set exinfo->properties correctly.
CoreApi-6020-9: Payload exceeds flight size bytes maximum, unable to send.	Attempted to send a single message with payload length greater than the maximum limit while using UMP flight size blocking behavior	Send smaller messages or increase source ume_flight_size_↩ bytes
CoreApi-6034-2: session id not a number	The provided session ID was invalid.	Specify a session ID that fits one of the following formats: A hexadecimal value prefixed by 0x, an octal value prefixed by 0, or a decimal value. The value must be smaller than 0xFFFFFFFFFFFFF↩ FFF regardless of representation.
CoreApi-6111-0: optlen incorrect size	optlen is not the correct size	optlen should be the size of a lbm↩ _uint8_t
CoreApi-6111-10: optlen too small	optlen too small	optlen should be at least LBM_M↩ IN_SGET_OPTLEN
CoreApi-6111-11: optlen incorrect size	optlen too small	optlen should be size_t
CoreApi-6111-12: optval not numeric	optval is not numeric	optval needs to be numeric
CoreApi-6111-13: optval not a number	optval not a number	optval needs to be a number

CoreApi-6111-14: optlen incorrect size	optlen incorrect size	optlen should be size_t
CoreApi-6111-15: optlen too small	optlen too small	optlen should be at least LBM_M↩IN_SGET_OPTLEN
CoreApi-6111-16: optlen incorrect size	optlen incorrect size	optlen should be of size lbm_↩uint64_t
CoreApi-6111-17: optval not numeric	optval not numeric	optval should be numeric
CoreApi-6111-18: optval not a number	optval not a number	optval needs to be a number
CoreApi-6111-19: optlen incorrect size	optlen incorrect size	optlen incorrect size.. should be a lbm_uint64_t
CoreApi-6111-1: invalid ume↩_receiver_paced_persistence setting	Invalid setting for rpp	Valid settings are 0 and 1
CoreApi-6111-20: optlen too small	optlen too small	optlen should be LBM_MIN_SGE↩T_OPTLEN
CoreApi-6111-21: optlen incorrect size	optlen incorrect size	optlen should be lbm_uint32_t
CoreApi-6111-22: optval not numeric	optval not numeric	optval is not a number
CoreApi-6111-23: optlen incorrect size	optlen incorrect size	optlen should be lbm_uint32_t
CoreApi-6111-24: optlen too small	optlen too small	optlen should be at least LBM_M↩IN_SGET_OPTLEN
CoreApi-6111-25: optlen incorrect size	optlen incorrect size	optlen should be size of lbm_↩uint8_t
CoreApi-6111-26: invalid ume↩_repository_ack_on_reception setting	invalid ume_repository_ack_on_↩recepeption setting	value should be 0 or 1
CoreApi-6111-27: optval not numeric	optval not numeric	optval is not a number
CoreApi-6111-28: invalid ume↩_repository_ack_on_reception setting	invalid ume_repository_ack_on_↩reception setting	optval should be 0 or 1
CoreApi-6111-29: optlen incorrect size	optlen incorrect size	optlen should be of size lbm_↩uint8_t
CoreApi-6111-2: optval not numeric	optval is not numeric	optval must be numeric
CoreApi-6111-30: optlen too small	optlen too small	optlen should be at least LBM_M↩IN_SGET_OPTLEN
CoreApi-6111-31: optlen incorrect size	size of the option is incorrect	optlen must be a lbm_uint8_t
CoreApi-6111-32: invalid ume↩_receiver_paced_persistence setting	ume_receiver_paced_persistence set to invalid value	ume_receiver_paced_persistence must be 0 - 2
CoreApi-6111-33: optval not numeric	optval is not a number	optval needs to be numeric only
CoreApi-6111-34: invalid ume↩_receiver_paced_persistence setting	ume_receiver_paced_persistence set to invalid value	ume_receiver_paced_persistence must be 0 - 2
CoreApi-6111-35: optlen incorrect size	optlen is not a lbm_uint8_t	optlen should be a lbm_uint8_t
CoreApi-6111-36: optlen too small	optlen is too small	optlen needs to be at least 80

CoreApi-6111-3: invalid ume↩_receiver_paced_persistence setting	optval not a valid value	optval must be 0 or 1
CoreApi-6111-4: optlen incorrect size	optval is incorrect size	optval must be a lbm_uint8_t size
CoreApi-6111-5: optlen too small	optlen is too small	optlen must be at least LBM_MIN↩_SGET_OPTLEN
CoreApi-6111-6: optlen incorrect size	optlen incorrect size	optlen must be a size_t
CoreApi-6111-7: optval not numeric	optval is not numeric	optval must be a number
CoreApi-6111-8: optval not a number	optval is not a number	optval needs to be a number
CoreApi-6111-9: optlen incorrect size	optlen incorrect size	optlen should be a size_t
CoreApi-6117-100: rcv must be valid	lbm_rcv_ume_deregister was called with a null rcv.	Don't deregister your receiver after you've deleted it.
CoreApi-6117-101: not registered with any stores.	Tried to deregister from stores when you were never registered with any.	Don't call deregister if you've never registered to any stores.
CoreApi-6186-1: ctx must be valid	Passed NULL for lbm_context_↩t∗ argument of lbm_deserialize_↩response API.	lbm_deserialize_response API lbm_context_t∗ argument must not be NULL.
CoreApi-6186-2: serialized response must be valid	Passed NULL for lbm_serialized↩_response_t∗ argument of lbm_↩deserialize_response API.	lbm_deserialize_response A↩PI lbm_serialized_response_t∗ argument must not be NULL.
CoreApi-6254-20: Can't allocate memory [s:d]	UMQ ran out of memory while creating a message selector string.	
CoreApi-6254-21: Can't allocate memory [s:d]	UMQ ran out of memory while creating a message selector.	
CoreApi-6259-12: Failed sending Response: cannot find route to Remote Domain u (s:d)	There is no known route to the given domain. This could happen momentarily as an LBM context learns the domain routes at startup.	This will be reported once per domain. A "route discovered to domain" should follow soon after. If not, the Gateway configuration should be examined for inconsistencies.
CoreApi-6259-17: Unicast Immediate Message failed: cannot find route to Remote Domain: u:s:d	There is no known route to the given domain. This could happen momentarily as an LBM context learns the domain routes at startup.	If the warning persists, the Gateway configuration should be examined for inconsistencies.
CoreApi-6259-18: Unicast Immediate Request failed: cannot find route to Remote Domain: u:s:d	There is no known route to the given domain. This could happen momentarily as an LBM context learns the domain routes at startup.	If the warning persists, the Gateway configuration should be examined for inconsistencies.
CoreApi-6273-1: Cannot enable RPP with round-robin stores	Cannot enable receiver-paced persistence with round-robin stores	Only use Q/C with RPP
CoreApi-6298-1: src could not deregister from store	source failed trying to deregister from a store.	try again, unicast control channel between source and store may be down
CoreApi-6298-2: src is already deregistering from the stores	source is already deregistered.	don't call lbm_src_ume_deregister multiple times passing in the same source.
CoreApi-6435-1: msg must be valid	Message Pointer is NULL	

CoreApi-6435-2: msg has no fragment information	Message doesn't have any fragment information	
CoreApi-6452-10: optval must 0 or 1	The auto_create_transaction_mgr passed in value was not 0 or 1, which is not a valid value.	Make sure the value given is 0 or 1.
CoreApi-6452-11: auto_create_↩transaction_mgr optval must 0 or 1	The string representing the auto↩_create_transaction_mgr could not be parsed to find a number.	Check the string being passed in, make sure it's a number 0 or 1.
CoreApi-6452-12: auto_create_↩transaction_mgr optval must be 0 or 1	The string representing the auto↩_create_transaction_mgr was not 0 or 1, which is not a valid value.	Check the string being passed in, make sure it's a number 0 or 1.
CoreApi-6452-13: optlen incorrect size	The size of the option passed in is not the correct size for this option.	This is usually a coding mistake; check that the correct type is being used for this option.
CoreApi-6452-14: optval must be between 0 or 3	The transaction_mgr_role passed in value was not between 0 and 3, which is not a valid value.	Make sure the value given between 0 and 3.
CoreApi-6452-15: optlen incorrect size	The string representing the transaction_mgr_role could not be parsed.	Check the string being passed in, make sure it's one of the following↩: PROPOSER, ACCEPTOR, LE↩ARNER, NONE
CoreApi-6452-16: optlen incorrect size	The size of the option passed in is not the correct size for this option.	This is usually a coding mistake; check that the correct type is being used for this option.
CoreApi-6452-17: optlen too small	The size of the buffer passed in was less than the minimum buffer size required.	Make sure the buffer is large enough - at least LBM_MIN_SG↩ET_OPTLEN bytes in size.
CoreApi-6452-18: optlen incorrect size	The size of the option passed in is not the correct size for this option.	This is usually a coding mistake; check that the correct type is being used for this option.
CoreApi-6452-19: optval must be between 0 or 2	The transaction_mgr_type passed in value was between 0 and 2, which is not a valid value.	Make sure the value given be between 0 and 2.
CoreApi-6452-20: optlen incorrect size	The string representing the transaction_mgr_type could not be parsed.	Check the string being passed in, make sure it's one of the following↩: PROPOSER, ACCEPTOR, LE↩ARNER, NONE
CoreApi-6452-21: optlen incorrect size	The size of the option passed in is not the correct size for this option.	This is usually a coding mistake; check that the correct type is being used for this option.
CoreApi-6452-22: optlen too small	The size of the buffer passed in was less than the minimum buffer size required.	Make sure the buffer is large enough - at least LBM_MIN_SG↩ET_OPTLEN bytes in size.
CoreApi-6452-3: optlen too small	Invalid Attribute	Change attribute to a valide value.
CoreApi-6452-4: optlen incorrect size	Invalid Attribute	Change attribute to a valide value.
CoreApi-6452-5: optval must be -1, 0 or 1	Invalid Attribute	Change attribute to a valide value.
CoreApi-6452-6: optval not numeric	Invalid Attribute	Change attribute to a valide value.
CoreApi-6452-7: optval must be -1, 0 or 1	Invalid Attribute	Change attribute to a valide value.
CoreApi-6452-8: optlen incorrect size	Invalid Attribute	Change attribute to a valide value.

CoreApi-6452-9: optlen incorrect size	The size of the option passed in is not the correct size for this option.	This is usually a coding mistake; check that the correct type is being used for this option.
CoreApi-6755-1: ip string is malformed	The ip string passed into ume_store is malformed.	The ume_store ip_string must be in an a.b.c.d dotted decimal format.
CoreApi-6759-12: context name too long	The supplied context name is invalid because it is too long.	Context names must not exceed 128 characters in length.
CoreApi-6759-13: optlen incorrect size	The oplen parameter is incorrect.	Optlen must be sizeof(lbm_ulong_t).
CoreApi-6759-14: optval not numeric	Optval is not numeric.	The optval string must consist of numbers only.
CoreApi-6759-15: optlen incorrect size	The oplen parameter is incorrect.	Optlen must be sizeof(lbm_ulong_t).
CoreApi-6759-16: optlen too small	Optlen is too small.	Optlen should be at least LBM_MIN_SGET_OPTLEN.
CoreApi-6759-17: optlen incorrect size	The oplen parameter is incorrect.	Optlen must be sizeof(lbm_ulong_t).
CoreApi-6759-18: optval not numeric	Optval is not numeric.	The optval string must consist of numbers only.
CoreApi-6759-19: optlen incorrect size	The oplen parameter is incorrect.	Optlen must be sizeof(lbm_ulong_t).
CoreApi-6759-20: optlen too small	Optlen is too small.	Optlen should be at least LBM_MIN_SGET_OPTLEN.
CoreApi-6759-21: optlen incorrect size	The oplen parameter is incorrect.	Optlen must be sizeof(lbm_uint64_t).
CoreApi-6759-22: optval not numeric	Optval is not numeric.	The optval string must consist of numbers only.
CoreApi-6759-23: optval not a valid value	Optval is not numeric.	The optval string must consist of numbers only and fit in a 64 bit value.
CoreApi-6759-24: optlen incorrect size	The oplen parameter is incorrect.	Optlen must be sizeof(lbm_uint64_t).
CoreApi-6759-25: optlen too small	Optlen is too small.	Optlen should be at least LBM_MIN_SGET_OPTLEN.
CoreApi-6759-26: optlen incorrect size	The oplen parameter is incorrect.	Optlen must be sizeof(lbm_uint64_t).
CoreApi-6759-27: optval not numeric	Optval is not numeric.	The optval string must consist of numbers only.
CoreApi-6759-28: optval not a valid value	Optval is not numeric.	The optval string must consist of numbers only and must fit in a 64 bit value.
CoreApi-6759-29: optlen incorrect size	The oplen parameter is incorrect.	Optlen must be sizeof(lbm_uint64_t).
CoreApi-6759-30: optlen too small	Optlen is too small.	Optlen should be at least LBM_MIN_SGET_OPTLEN.
CoreApi-6856-10: optlen incorrect size	optlen incorrect size	optlen should be lbm_uint32_t
CoreApi-6856-11: optval not numeric	optval not numeric	optval is not a number
CoreApi-6856-12: optlen incorrect size	optlen incorrect size	optlen should be lbm_uint32_t
CoreApi-6856-13: optlen too small	optlen too small	optlen should be at least LBM_MIN_SGET_OPTLEN
CoreApi-6856-2: optlen incorrect size	optlen incorrect size	optlen should be lbm_uint16_t

CoreApi-6856-3: optval not numeric	optval not numeric	optval is not a number
CoreApi-6856-4: optlen incorrect size	optlen incorrect size	optlen should be lbm_uint16_t
CoreApi-6856-5: optlen too small	optlen too small	optlen should be at least LBM_M↩IN_SGET_OPTLEN
CoreApi-6856-6: optlen incorrect size	optlen incorrect size	optlen should be lbm_uint32_t
CoreApi-6856-7: optval not numeric	optval not numeric	optval is not a number
CoreApi-6856-8: optlen incorrect size	optlen incorrect size	optlen should be lbm_uint32_t
CoreApi-6856-9: optlen too small	optlen too small	optlen should be at least LBM_M↩IN_SGET_OPTLEN
CoreApi-6898-0: optlen incorrect size	umq_explicit_ack_only needs to be 0 or 1.:	Set umq_explicit_ack_only to 0 or 1.
CoreApi-6898-1: optval must be 0 or 1	umq_explicit_ack_only needs to be 0 or 1.	Set umq_explicit_ack_only to 0 or 1.
CoreApi-6898-2: optval not numeric	umq_explicit_ack_only needs to be 0 or 1.	Set umq_explicit_ack_only to 0 or 1.
CoreApi-6898-3: optval must be 0 or 1	umq_explicit_ack_only needs to be 0 or 1.	Set umq_explicit_ack_only to 0 or 1.
CoreApi-6898-4: optlen incorrect size	lbm_rcv_topic_attr_umq_exack_↩only_get requires an Interger.	Pass a pointer to a Integer to lbm_rcv_topic_attr_umq_exack_↩only_get
CoreApi-6898-5: optlen too small	lbm_rcv_topic_attr_umq_exack_↩only_sget requires an Interger.	Pass a pointer to a Integer to lbm_rcv_topic_attr_umq_exack_↩only_sget
CoreApi-6898-6: must have explicit acks enabled	Explicit Acks must be set to 1 before calling sendExplicitAck.	Set umq_explicit_ack_only to 1.
CoreApi-6898-7: msg must be valid	Invalid Message.	lbm_msg_umq_send_explicit_↩ack must be called with a valid message.
CoreApi-6898-8: msg must be valid	Invalid Message.	lbm_msg_umq_can_send_↩explicit_ack must be called with a valid message.
CoreApi-6932-11: optlen incorrect size	The size of the option was too large and/or too small	sri_request_interval is an lbm_↩ulong_t
CoreApi-6932-12: optval must be greater than 0	The option value submitted was zero (0); this value must be greater than 0.	While 1 is an acceptable minimum; a larger value provides redundancy.
CoreApi-6932-13: optval not numeric	The option value string submitted contains non numeric characters.	Be sure there are no trailing non numeric characters such as spaces and that the number is not in hexadecimal.
CoreApi-6932-14: optval not a number	The option value string submitted could not be converted into a number	Be sure that the size (magnitude) of the value is correct for an lbm_↩ulong_t
CoreApi-6932-15: optval must be greater than 0	The option value submitted was zero (0); this value must be greater than 0.	While 1 is an acceptable minimum; a larger value provides redundancy.
CoreApi-6932-16: optlen incorrect size	The size of the option was too large and/or too small	sri_request_interval is an lbm_↩ulong_t
CoreApi-6932-17: optlen too small	The size of the option buffer was too small to contain the option.	sri_request_interval is an lbm_↩ulong_t

CoreApi-6932-1: optlen incorrect size	The size of the option was too large and/or too small	sri_request_interval is an lbm_↩ ulong_t
CoreApi-6932-21: optlen incorrect size	The size of the option was too large and/or too small	sri_request_interval is an lbm_↩ ulong_t
CoreApi-6932-22: optval must be greater than 0	The option value submitted was zero (0); this value must be greater than 0.	While 1 is an acceptable minimum; a larger value provides redundancy.
CoreApi-6932-23: optval not numeric	The option value string submitted contains non numeric characters.	Be sure there are no trailing non numeric characters such as spaces and that the number is not in hexadecimal.
CoreApi-6932-24: optval not a number	The option value string submitted could not be converted into a number	Be sure that the size (magnitude) of the value is correct for an lbm_↩ ulong_t
CoreApi-6932-25: optval must be greater than 0	The option value submitted was zero (0); this value must be greater than 0.	While 1 is an acceptable minimum; a larger value provides redundancy.
CoreApi-6932-26: optlen incorrect size	The size of the option was too large and/or too small	sri_request_interval is an lbm_↩ ulong_t
CoreApi-6932-27: optlen too small	The size of the option buffer was too small to contain the option.	sri_request_interval is an lbm_↩ ulong_t
CoreApi-6932-2: optval must be greater than 0	The option value submitted was zero (0); this value must be greater than 0.	While 1 is an acceptable minimum; a larger value provides redundancy.
CoreApi-6932-31: optlen incorrect size	The size of the option was too large and/or too small	sri_request_interval is an lbm_↩ ulong_t
CoreApi-6932-32: optval must be greater than 0	The option value submitted was zero (0); this value must be greater than 0.	While 1 is an acceptable minimum; a larger value provides redundancy.
CoreApi-6932-33: optval not numeric	The option value string submitted contains non numeric characters.	Be sure there are no trailing non numeric characters such as spaces and that the number is not in hexadecimal.
CoreApi-6932-34: optval not a number	The option value string submitted could not be converted into a number	Be sure that the size (magnitude) of the value is correct for an lbm_↩ ulong_t
CoreApi-6932-35: optval must be greater than 0	The option value submitted was zero (0); this value must be greater than 0.	While 1 is an acceptable minimum; a larger value provides redundancy.
CoreApi-6932-36: optlen incorrect size	The size of the option was too large and/or too small	sri_request_interval is an lbm_↩ ulong_t
CoreApi-6932-37: optlen too small	The size of the option buffer was too small to contain the option.	sri_request_interval is an lbm_↩ ulong_t
CoreApi-6932-3: optval not numeric	The option value string submitted contains non numeric characters.	Be sure there are no trailing non numeric characters such as spaces and that the number is not in hexadecimal.
CoreApi-6932-41: optlen incorrect size	The size of the option was too large and/or too small	sri_request_interval is an lbm_↩ ulong_t
CoreApi-6932-42: optval must be greater than 0	The option value submitted was zero (0); this value must be greater than 0.	While 1 is an acceptable minimum; a larger value provides redundancy.

CoreApi-6932-43: optval not numeric	The option value string submitted contains non numeric characters.	Be sure there are no trailing non numeric characters such as spaces and that the number is not in hexadecimal.
CoreApi-6932-44: optval not a number	The option value string submitted could not be converted into a number	Be sure that the size (magnitude) of the value is correct for an lbm_↩ ulong_t
CoreApi-6932-45: optval must be greater than 0	The option value submitted was zero (0); this value must be greater than 0.	While 1 is an acceptable minimum; a larger value provides redundancy.
CoreApi-6932-46: optlen incorrect size	The size of the option was too large and/or too small	sri_request_interval is an lbm_↩ ulong_t
CoreApi-6932-47: optlen too small	The size of the option buffer was too small to contain the option.	sri_request_interval is an lbm_↩ ulong_t
CoreApi-6932-4: optval not a number	The option value string submitted could not be converted into a number	Be sure that the size (magnitude) of the value is correct for an lbm_↩ ulong_t
CoreApi-6932-51: optlen incorrect size	The size of the option was too large and/or too small	sri_request_interval is an lbm_↩ ulong_t
CoreApi-6932-52: optval must be greater than 0	The option value submitted was zero (0); this value must be greater than 0.	While 1 is an acceptable minimum; a larger value provides redundancy.
CoreApi-6932-53: optval not numeric	The option value string submitted contains non numeric characters.	Be sure there are no trailing non numeric characters such as spaces and that the number is not in hexadecimal.
CoreApi-6932-54: optval not a number	The option value string submitted could not be converted into a number	Be sure that the size (magnitude) of the value is correct for an lbm_↩ ulong_t
CoreApi-6932-55: optval must be greater than 0	The option value submitted was zero (0); this value must be greater than 0.	While 1 is an acceptable minimum; a larger value provides redundancy.
CoreApi-6932-56: optlen incorrect size	The size of the option was too large and/or too small	sri_request_interval is an lbm_↩ ulong_t
CoreApi-6932-57: optlen too small	The size of the option buffer was too small to contain the option.	sri_request_interval is an lbm_↩ ulong_t
CoreApi-6932-5: optval must be greater than 0	The option value submitted was zero (0); this value must be greater than 0.	While 1 is an acceptable minimum; a larger value provides redundancy.
CoreApi-6932-6: optlen incorrect size	The size of the option was too large and/or too small	sri_request_interval is an lbm_↩ ulong_t
CoreApi-6932-7: optlen too small	The size of the option buffer was too small to contain the option.	sri_request_interval is an lbm_↩ ulong_t
CoreApi-6937-1: optlen incorrect size	The size of the option was too large or too small	transport_tcp_use_session_id is an int
CoreApi-6937-2: optval must be 0 or 1	transport_tcp_use_session_id can either be set "ON" or "OFF"	Please use "0" to indicate "OFF" and "1" to indicate "ON"
CoreApi-6937-3: optval not numeric	The option value string submitted contains non numeric characters.	Be sure there are no trailing non numeric characters such as spaces and that the number is not in hexadecimal.
CoreApi-6937-4: optval must be 0 or 1	transport_tcp_use_session_id can either be set "ON" or "OFF"	Please use "0" to indicate "OFF" and "1" to indicate "ON"
CoreApi-6937-5: optlen incorrect size	The size of the option was too large or too small	transport_tcp_use_session_id is an int

CoreApi-6937-6: optlen too small	The size of the option buffer was too small to contain the option.	transport_tcp_use_session_id is an int
CoreApi-6976-100: optval not understood	The value is not a supported operational mode - either embedded or sequential.	
CoreApi-6976-101: optlen incorrect size	The value of optlen passed in does not match the size of the option type.	
CoreApi-6976-102: optlen too small	The value of optlen passed in is too small to hold the option type.	
CoreApi-6976-107: optlen incorrect size	Value of optlen passed in is not equal to the size of the option.	
CoreApi-6976-108: optval not numeric	Value of the option passed in does not appear to be a number - and it needs to be.	
CoreApi-6976-109: optval not a number	Value of the option passed in does not appear to be a number - and it needs to be.	
CoreApi-6976-110: optlen incorrect size	Value of optlen passed in is not equal to the size of the option.	
CoreApi-6976-111: optlen too small	Value of optlen passed in is not big enough to store the option type.	
CoreApi-6976-112: lbm_imbq_↩create CreateMutex	We failed to create a mutex on Windows; this probably indicates resource exhaustion.	Check machine for excessive memory use or excessive open handles (both can be viewed in Task Manager)
CoreApi-6976-113: lbm_imbq_↩create CreateSemaphore	We failed to create a semaphore on Windows; this probably indicates resource exhaustion.	Check machine for excessive memory use or excessive open handles (both can be viewed in Task Manager)
CoreApi-6976-115: The LBT-SMX transport type does not support Hot Failover sources	User attempted to create a hot failover source with an LBT-SMX transport, which is not supported.	
CoreApi-6976-116: optval either not a number or a negative number	The value passed in does not appear to be a number, or it is a negative number.	
CoreApi-6976-119: Configured LBT-SMX transport_lbtsmx_id_low (u) is greater than configured transport_lbtsmx_id_high (u)	The configured "context transport↩_lbtsmx_id_low" option is higher than the configured "context transport_lbtsmx_id_high" option, which is not allowed.	
CoreApi-6976-152: LBT-SMX: failed to allocate shared memory s (d)	A shared memory object for the S↩MX transport could not be created. This could be caused by a permission error or no more resources. Please refer to the OS error number given.	
CoreApi-6976-153: LBT-SMX: failed to allocate shared memory s of size configured d, rcvrs: d (d)	A shared memory object for the S↩MX transport could not be created. This could be caused by a permission error or no more resources. Please refer to the OS error number given.	

CoreApi-6976-154: LBT-SMX: failed to map shared memory (d)	An error occurred trying to map a pointer to the SMX shared memory region. Please refer to the OS error number given.	
CoreApi-6976-155: LBT-SMX: can not get shared semaphore	A shared memory object for the S↩MX transport could not be created. This could be caused by a permission error or no more resources. Please refer to the OS error number given.	
CoreApi-6976-156: LBT-SMX: can not initialize shared semaphore (d)	An error occurred when initializing the shared semaphore used to ensure mutual exclusion while accessing the SMX shared memory region. Please refer to the OS error number given.	
CoreApi-6976-157: LBT-SMX: failed to allocate shared memory s (d)	A shared memory object for the S↩MX transport could not be created. This could be caused by a permission error or no more resources. Please refer to the OS error number given.	
CoreApi-6976-158: LBT-SMX: failed to map shared memory s (d)	An error occurred trying to map a pointer to the SMX shared memory region. Please refer to the OS error number given.	
CoreApi-6976-159: LBT-SMX: can not create shared Mutex (d)	The shared Mutex used to ensure mutual exclusion while accessing the SMX shared memory region could not be created. Please refer to the OS error number given.	
CoreApi-6976-1: buff_acquire would block	A non-blocking lbm_src_buff_↩acquire would block.	This is perfectly normal from time to time. If it happens every send call or very frequently, a receiver may be still alive, but hung.
CoreApi-6976-2: requested buffer length plus headers is higher than configured transport_lbtsmx↩_datagram_max_size (u bytes) for source	A length parameter was passed to lbm_src_buff_acquire that was greater than the configured maximum datagram size; this is a user error.	Application code should be fixed to not call buff_acquire with a length parameter that is too big.
CoreApi-6976-30: LBT-SMX not supported	The user is trying to set a config option or perform a function with a library that does not support the L↩BT-SMX transport.	
CoreApi-6976-31: lbm_send_↩request and lbm_send_request_ex are not supported with transport type LBT-SMX	User tried to send a request via a source set to use the SMX transport; this is not currently supported.	Don't send requests on LBT-SMX sources.
CoreApi-6976-33: optlen incorrect size	The optlen parameter passed in does not match the size of the option type.	
CoreApi-6976-34: LBT-SMX transmission window size must be at least d bytes	The user tried to configure the L↩BT-SMX transmission window size smaller than the minimum required size.	Change configuration to specify a larger LBT-SMX transmission window size.

CoreApi-6976-35: optval not numeric	The value passed in does not appear to be a number - and it should be.	
CoreApi-6976-36: optval not a number	The value passed in does not appear to be a number - and it should be.	
CoreApi-6976-37: LBT-SMX transmission window size must be at least d bytes	The user tried to configure the LBT-SMX transmission window size smaller than the minimum required size.	Change configuration to specify a larger LBT-SMX transmission window size.
CoreApi-6976-38: optlen incorrect size	The optlen parameter passed in does not match the size of the option type.	
CoreApi-6976-39: optlen too small	The optlen parameter passed in specifies a size that is too small to hold the option value.	
CoreApi-6976-3: LBT-SMX: too many outstanding buffs; call lbm_src_buffs_complete before acquiring more	The LBT-SMX transport session currently has too many outstanding buffers; if another was acquired now, the receivers could never catch up and the buff_acquire call would block forever.	Application code should be fixed to not call buff_acquire too many times without calling buffs_complete.
CoreApi-6976-40: optlen incorrect size	The optlen parameter passed in does not match the size of the option type.	
CoreApi-6976-41: LBT-SMX maximum receivers optval not a valid size	LBT-SMX max receivers must be set to at least 1; 0 is not supported (or sensible).	
CoreApi-6976-42: optval not numeric	The value passed in does not appear to be a number - and it should be.	
CoreApi-6976-43: LBT-SMX maximum receivers optval not a valid size	LBT-SMX max receivers must be set to at least 1; 0 is not supported (or sensible).	
CoreApi-6976-44: optlen incorrect size	The optlen parameter passed in does not match the size of the option type.	
CoreApi-6976-45: optlen too small	The optlen parameter passed in does not match the size of the option type.	
CoreApi-6976-46: optlen incorrect size	The optlen parameter passed in does not match the size of the option type.	
CoreApi-6976-47: optval not a valid interval	The LBT-SMX session message interval must be > 0; zero is not a valid value.	
CoreApi-6976-48: optval not numeric	The value passed in does not appear to be a number - and it should be.	
CoreApi-6976-49: optval not a number	The value passed in does not appear to be a number - and it should be.	

CoreApi-6976-4: LBT-SMX: too many outstanding buffs; call lbm_↩src_buffs_complete before acquiring more	The LBT-SMX transport session currently has too many outstanding buffers; if another was acquired now, the receivers could never catch up and the buff_acquire call would block forever.	Application code should be fixed to not call buff_acquire too many times without calling buffs_↩complete.
CoreApi-6976-50: optval not a valid interval	The LBT-SMX session message interval must be > 0; zero is not a valid value.	
CoreApi-6976-51: optlen incorrect size	The optlen parameter passed in does not match the size of the option type.	
CoreApi-6976-52: optlen too small	The optlen parameter passed in specifies a size that is too small to hold the option value.	
CoreApi-6976-53: optlen incorrect size	The optlen parameter passed in does not match the size of the option type.	
CoreApi-6976-54: optval not numeric	The value passed in does not appear to be a number - and it should be.	
CoreApi-6976-55: optlen incorrect size	The optlen parameter passed in does not match the size of the option type.	
CoreApi-6976-56: optlen too small	The optlen parameter passed in specifies a size that is too small to hold the option value.	
CoreApi-6976-57: LBT-SMX is not supported	User is trying to configure the lbtsmx_datagram_max_size on a build that doesn't support LBT-S↩MX.	
CoreApi-6976-58: optlen incorrect size	The optlen parameter passed in does not match the size of the option type.	
CoreApi-6976-59: value must be greater than or equal to d	The datagram max size for LB↩T-SMX must be >= the maximum header size.	
CoreApi-6976-5: LBT-SMX: too many outstanding buffs; call lbm_↩src_buffs_complete before acquiring more	The LBT-SMX transport session currently has too many outstanding buffers; if another was acquired now, the receivers could never catch up and the buff_acquire call would block forever.	Application code should be fixed to not call buff_acquire too many times without calling buffs_↩complete.
CoreApi-6976-60: LBT-SMX is not supported	The user tried to set or get lbtsmx↩_datagram_max_size using a build that does not support LBT-SMX.	
CoreApi-6976-61: datagram size not a number	The value passed in does not appear to be a number - and it should be.	
CoreApi-6976-62: value must be greater than or equal to d	The datagram max size for LB↩T-SMX must be >= the maximum header size.	
CoreApi-6976-63: LBT-SMX is not supported	The user tried to set or get lbtsmx↩_datagram_max_size using a build that does not support LBT-SMX.	

CoreApi-6976-64: optlen incorrect size	The optlen parameter passed in does not match the size of the option type.	
CoreApi-6976-65: LBT-SMX is not supported	The user tried to set or get lbtsmx↩_datagram_max_size using a build that does not support LBT-SMX.	
CoreApi-6976-66: optlen too small	The optlen parameter passed in specifies a size that is too small to hold the option value.	
CoreApi-6976-67: could not allocate new buffer to retain lbm_↩msg_t	A buffer to hold message data could not be allocated; usually this means malloc failed due to being out of memory.	Check machine for excessive memory use.
CoreApi-6976-68: src cannot be NULL	User passed NULL for the source parameter. NULL is not a valid source.	
CoreApi-6976-69: LBT-SMX sources do not lbm_src_send_↩ex_info_t options; exinfo must be NULL	LBT-SMX does not support any of the options that can be specified with an lbm_src_send_ex_info_↩t object. Therefore, the exinfo parameter when sending with an L↩BT-SMX source should always be NULL.	
CoreApi-6976-70: source transport type does not support sending with lbm_src_buff_acquire	The current build does not support LBT-SMX, but the user is trying to call the new LBT-SMX-related send API calls.	
CoreApi-6976-71: src must not be NULL	The user specified a NULL pointer for the source argument to lbm_↩src_buff_acquire, which is invalid.	
CoreApi-6976-72: bufp must not be NULL	The user specified a NULL pointer for the bufp argument to lbm_src↩_buff_acquire, which is invalid.	
CoreApi-6976-73: only LBT-S↩MX sources support sending with lbm_src_buff_acquire	The user called a new LBT-SM↩X-related send API call using a source that is not LBT-SMX source; this is unsupported.	
CoreApi-6976-74: source transport type does not support sending with lbm_src_buffs_complete	The current build does not support LBT-SMX, but the user is trying to call the new LBT-SMX-related send API calls.	
CoreApi-6976-75: src must not be NULL	The user specified a NULL pointer for the source argument to lbm↩_src_buffs_complete, which is invalid.	
CoreApi-6976-76: only LBT-S↩MX sources support sending with lbm_src_buffs_complete	The user called a new LBT-SM↩X-related send API call using a source that is not LBT-SMX source; this is unsupported.	
CoreApi-6976-77: source transport type does not support sending with lbm_src_buffs_complete↩_and_acquire	The current build does not support LBT-SMX, but the user is trying to call the new LBT-SMX-related send API calls.	
CoreApi-6976-78: src must not be NULL	The user specified a NULL pointer for the source argument to lbm_↩src_buffs_complete_and_acquire, which is invalid.	

CoreApi-6976-79: bufp must not be NULL	The user specified a NULL pointer for the bufp argument to lbm_↩src_buffs_complete_and_acquire, which is invalid.	
CoreApi-6976-80: only LBT-SMX sources support sending with lbm_src_buffs_complete_and_↩acquire	The user called a new LBT-SM↩X-related send API call using a source that is not LBT-SMX source; this is unsupported.	
CoreApi-6976-81: source transport type does not support lbm_src_↩buffs_cancel	The current build does not support LBT-SMX, but the user is trying to call the new LBT-SMX-related send API calls.	
CoreApi-6976-82: src must not be NULL	The user specified a NULL pointer for the source argument to lbm_↩src_buffs_cancel, which is invalid.	
CoreApi-6976-83: only LBT-S↩MX sources support canceling outstanding buffers with lbm_src_↩buffs_cancel	The user called a new LBT-SM↩X-related send API call using a source that is not LBT-SMX source; this is unsupported.	
CoreApi-6976-85: an error occurred while canceling source buffers - possibly due to non thread-safe use of lbm_src_buffs↩_cancel; LBT-SMX shared memory may be in an inconsistent state	The user probably called a series of non-thread-safe buffer-based send API functions concurrently.	Code testing for race conditions & code inspection is advised.
CoreApi-6976-86: optlen incorrect size	The value of optlen passed in does not match the size of the option type.	
CoreApi-6976-87: optval not a valid ID	Transport ID 0 is reserved for internal use for LBT-SMX, so configuring a 0 is not allowed.	
CoreApi-6976-88: optval not numeric	The value given does not appear to be a number - and it needs to be.	
CoreApi-6976-89: optval not a valid ID	Transport ID 0 is reserved for internal use for LBT-SMX, so configuring a 0 is not allowed.	
CoreApi-6976-90: optlen incorrect size	The value of optlen passed in does not match the size of the option type.	
CoreApi-6976-91: optlen too small	The value of optlen passed in is too small to hold the option type.	
CoreApi-6976-92: optlen incorrect size	The value of optlen passed in does not match the size of the option type.	
CoreApi-6976-93: optval not a valid ID	Transport ID 0 is reserved for internal use for LBT-SMX, so configuring a 0 is not allowed.	
CoreApi-6976-94: optval not numeric	The value given does not appear to be a number - and it needs to be.	
CoreApi-6976-95: optval not a valid ID	Transport ID 0 is reserved for internal use for LBT-SMX, so configuring a 0 is not allowed.	
CoreApi-6976-96: optlen incorrect size	The value of optlen passed in does not match the size of the option type.	

CoreApi-6976-97: optlen too small	The value of optlen passed in is too small to hold the option type.	
CoreApi-6976-98: optlen incorrect size	The value of optlen passed in does not match the size of the option type.	
CoreApi-6976-99: optval not supported	The value is not a supported operational mode - either embedded or sequential.	
CoreApi-6986-1: ume_sri_inter_↩sri_interval can not be zero	ume_sri_inter_sri_interval is set to zero	ume_sri_inter_sri_interval can not be zero
CoreApi-6986-2: ume_sri_inter_↩sri_interval can not be zero	ume_sri_inter_sri_interval is set to zero	ume_sri_inter_sri_interval can not be zero
CoreApi-6986-3: optlen incorrect size	optlen incorrect size	optlen should be lbm_uint32_t
CoreApi-6986-4: ume_source_↩timer_minimum_interval can not be zero	ume_src_timer_min_ivl is set to zero	ume_src_timer_min_ivl can not be zero
CoreApi-6986-5: optval not numeric	optval not numeric	optval is not a number
CoreApi-6986-6: ume_source_↩timer_minimum_interval can not be zero	ume_src_timer_min_ivl is set to zero	ume_src_timer_min_ivl can not be zero
CoreApi-6986-7: optlen incorrect size	optlen incorrect size	optlen should be lbm_uint32_t
CoreApi-6986-8: optlen too small	optlen too small	optlen should be at least LBM_M↩IN_SGET_OPTLEN
CoreApi-6993-1: optval not numeric	optval not numeric	optval is not a number
CoreApi-6993-2: optlen incorrect size	optlen incorrect size	optlen should be lbm_uint32_t
CoreApi-6993-3: optlen too small	optlen too small	optlen should be at least LBM_M↩IN_SGET_OPTLEN
CoreApi-6993-4: optval not numeric	optval not numeric	optval is not a number
CoreApi-6993-5: optlen incorrect size	optlen incorrect size	optlen should be lbm_uint32_t
CoreApi-6993-6: optlen too small	optlen too small	optlen should be at least LBM_M↩IN_SGET_OPTLEN
CoreApi-6993-7: optlen incorrect size	optlen incorrect size	optlen should be lbm_uint32_t
CoreApi-6993-8: optlen incorrect size	optlen incorrect size	optlen should be lbm_uint32_t
CoreApi-7160-10: optval not numeric	Attempted to set receiver otr↩_request_message_timeout to a non numeric value	optval must be a string representation of a number
CoreApi-7160-11: optval not a number	Could not parse string optval into a number	optval must be a number
CoreApi-7160-12: optval must be greater than 0	timeout value cannot be negative	Change configuration to provide a positive value
CoreApi-7160-13: optlen incorrect size	optlen contained an incorrect size	optlen should be sizeof(lbm_↩ulong_t)
CoreApi-7160-14: optlen too small	optlen was too small	increase size of optlen
CoreApi-7160-1: optlen incorrect size	optlen value contained the incorrect length	optlen should be sizeof(lbm_↩ulong_t)
CoreApi-7160-2: optval must be greater than 0	optval contained a negative integer	optval must be a positive integer

CoreApi-7160-3: optval not numeric	Attempted to set receiver retransmit_request_message↩ _timeout to a non numeric value	optval must be a string representation of a number
CoreApi-7160-4: optval not a number	Could not parse string optval into a number	optval must be a number
CoreApi-7160-5: optval must be greater than 0	receiver retransmit_request↩ _message_timeout cannot be negative	Change configuration to provide a positive value
CoreApi-7160-6: optlen incorrect size	optlen contained an incorrect size	optlen should be sizeof(lbm_↩ ulong_t)
CoreApi-7160-7: optlen too small	optlen was too small	increase size of optlen
CoreApi-7160-8: optlen incorrect size	optlen value contained the incorrect length	optlen should be sizeof(lbm_↩ ulong_t)
CoreApi-7160-9: optval must be greater than 0	optval contained a negative integer	optval must be a positive integer
CoreApi-7175-10: optlen too small	The size of the option buffer was too small to contain the option.	ume_application_outstanding_↩ maximum is an lbm_ulong_t
CoreApi-7175-1: optlen incorrect size	The size of the option was too large and/or too small	otr_message_caching_threshold is an lbm_ulong_t
CoreApi-7175-2: optval not numeric	The option value string submitted contains non numeric characters.	Be sure there are no trailing non numeric characters such as spaces and that the number is not in hexadecimal.
CoreApi-7175-3: optval not a number	The option value string submitted could not be converted into a number	Be sure that the size (magnitude) of the value is correct for an lbm_↩ ulong_t
CoreApi-7175-4: optlen incorrect size	The size of the option was too large and/or too small	otr_message_caching_threshold is an lbm_ulong_t
CoreApi-7175-5: optlen too small	The size of the option buffer was too small to contain the option.	otr_message_caching_threshold is an lbm_ulong_t
CoreApi-7175-6: optlen incorrect size	The size of the option was too large and/or too small	ume_application_outstanding_↩ maximum is an lbm_ulong_t
CoreApi-7175-7: optval not numeric	The option value string submitted contains non numeric characters.	Be sure there are no trailing non numeric characters such as spaces and that the number is not in hexadecimal.
CoreApi-7175-8: optval not a number	The option value string submitted could not be converted into a number	Be sure that the size (magnitude) of the value is correct for an lbm_↩ ulong_t
CoreApi-7175-9: optlen incorrect size	The size of the option was too large and/or too small	ume_application_outstanding_↩ maximum is an lbm_ulong_t
CoreApi-7521-1: optlen incorrect size	Incorrect length used for setting integer options	length must be sizeof int
CoreApi-7521-2: optval must be 0 or 1	Invalid value for optval	optval must be 0 or 1
CoreApi-7521-3: optval not numeric	Option string was not a number	Provide number as a string
CoreApi-7521-4: optval must be 0 or 1	Invalid value for optval	optval must be 0 or 1
CoreApi-7521-5: optlen incorrect size	Size of optlen was incorrect	optlen size must be size of int
CoreApi-7521-6: optlen too small	Size of optlen was too small	Size of optlen must be at least 80
CoreApi-7563-1: optlen incorrect size	The size of the option passed in is not the correct size for this option	

CoreApi-7563-2: Resolver Event function must be valid	The function pointer the the function is invalid.	Check parameters.
CoreApi-7563-3: str_setopt not supported for option	str_setopt is not supported	
CoreApi-7563-4: optlen incorrect size	The size of the option passed in is not the correct size for this option	
CoreApi-7563-5: str_getopt not supported for option	String Get option is not supported	
CoreApi-7699-1: Socket error setting SO_EXCLUSIVEADDRUSE: s	An error was returned from the OS while trying to set the SO_EXCL↩USIVEADDRUSE (Windows Only) option on a socket.	Refer to the OS error number and message given to determine cause of the failure.
CoreApi-7839-13: optlen incorrect size	The size of the option buffer was too small to contain the option.	monitor_interval is an lbm_ulong↩_t
CoreApi-7839-14: optval not numeric	The option value string submitted could not be converted into a number	Be sure that the size (magnitude) of the value is correct for an lbm_↩ulong_t
CoreApi-7839-15: optlen incorrect size	The size of the option was too large and/or too small	monitor_interval is an lbm_ulong↩_t
CoreApi-7839-16: optlen too small	The size of the option buffer was too small to contain the option.	monitor_interval is an lbm_ulong↩_t
CoreApi-7839-19: receiver must be valid	An internal error was encountered while auto-monitoring a receiver topic.	Contact Informatica support.
CoreApi-7839-1: optlen incorrect size	Attempted to set option receiver↩_callback_service_time_enabled with an incorrect optlen size.	Optlen must be size of int.
CoreApi-7839-20: receiver must be valid	An internal error was encountered while auto-monitoring a receiver topic.	Contact Informatica support.
CoreApi-7839-21: receiver must be valid	An internal error was encountered while auto-monitoring a receiver topic.	Contact Informatica support.
CoreApi-7839-22: receiver must be valid	An internal error was encountered while auto-monitoring a receiver topic.	Contact Informatica support.
CoreApi-7839-23: Error initializing auto-monitoring	An internal error was encountered while auto-monitoring a receiver topic.	Contact Informatica support.
CoreApi-7839-24: automatic monitoring of receiver failed [d] [s]	Unable to monitor receiver.	This is an internal error usually caused by running out of memory.
CoreApi-7839-25: automatic unmonitoring of receiver failed [d] [s]	Unable to unmonitor receiver.	This is an internal error usually caused by running out of memory.
CoreApi-7839-26: wildcard receiver must be valid	An internal error was encountered while auto-monitoring a wildcard receiver.	Contact Informatica support.
CoreApi-7839-27: wildcard receiver must be valid	An internal error was encountered while auto-monitoring a wildcard receiver.	Contact Informatica support.
CoreApi-7839-28: Error initializing auto-monitoring	An internal error was encountered while auto-monitoring a wildcard receiver.	Contact Informatica support.
CoreApi-7839-29: automatic monitoring of wildcard receiver failed [d] [s]	Unable to monitor receiver.	This is an internal error usually caused by running out of memory.

CoreApi-7839-2: optval must be 0 or 1	Attempted to set option receiver↩ _callback_service_time_enabled with an invalid optval.	Optval must be 0 or 1.
CoreApi-7839-30: automatic unmonitoring of wildcard receiver failed [d] [s]	Unable to unmonitor wildcard receiver.	This is an internal error usually caused by running out of memory.
CoreApi-7839-32: automatic monitoring of source failed [d] [s]	Unable to monitor source.	This is an internal error usually caused by running out of memory.
CoreApi-7839-38: Context must be valid	An internal error was encountered while updating the domain ID for an auto-monitored context.	Contact Informatica support.
CoreApi-7839-39: context must be valid	An internal error was encountered while auto-monitoring a context.	Contact Informatica support.
CoreApi-7839-3: optval not numeric	Attempted to set option receiver↩ _callback_service_time_enabled with an invalid optval.	Optval must be numeric.
CoreApi-7839-40: monitor_↩ transport option is not supported	Invalid monitor_transport is configured.	User needs to select a valid option for monitor_transport
CoreApi-7839-41: optlen incorrect size	Attempted to set wildcard receiver attribute "monitor_interval" using the wrong size optlen.	The parameter "optlen" must be the size of an lbm_ulong_tr.
CoreApi-7839-42: optval not numeric	Attempted to set wildcard receiver attribute "monitor_interval" using a string that is not a number.	The parameter "optval" must be a string representation of a number.
CoreApi-7839-43: optlen incorrect size	Attempted to get wildcard receiver attribute "monitor_interval" using the wrong size optlen.	The parameter "optlen" must be the size of an lbm_ulong_t.
CoreApi-7839-44: optlen too small	Attempted to get wildcard receiver attribute "monitor_interval" using a string length that is too short.	The parameter "optlen" must be at least 80.
CoreApi-7839-45: Error initializing auto-monitoring	An internal error was encountered while auto-monitoring a context.	Contact Informatica support.
CoreApi-7839-4: optval not a number	Attempted to set option receiver↩ _callback_service_time_enabled with an invalid optval.	Optval must be numeric.
CoreApi-7839-5: optval must be 0 or 1	Attempted to set option receiver↩ _callback_service_time_enabled with an invalid optval.	Optval must be 0 or 1.
CoreApi-7839-6: optlen incorrect size	Attempted to retrieve option receiver_callback_service_time↩ _enabled with an incorrect optlen size.	Optlen must be size of int.
CoreApi-7839-7: optlen too small	Attempted to retrieve option receiver_callback_service_time↩ _enabled with an incorrect optlen size.	Optlen must be greater than LBM↩ _MIN_SGET_OPTLEN.
CoreApi-7863-1: could not allocate new buffer to retain lbm_msg_t	A buffer to hold message data could not be allocated; usually this means malloc failed due to being out of memory.	Check machine for excessive memory use.
CoreApi-7875-1: optval cannot contain multiple values	The value for resolver_unicast↩ _daemon contained a separator. Each call to set resolver_unicast↩ _daemon can contain only a single value.	Remove the separator and extra values. Additional values for resolver_unicast_daemon can be added with repeated sets of the option.

CoreApi-7911-10: optval must not be NULL	optval parameter cannot be NULL	
CoreApi-7911-11: optlen must not be NULL	optlen parameter cannot be NULL	
CoreApi-7911-12: optval is not large enough	Provided optlen was not large enough to contain stackname string	optlen now contains the minimum necessary size.
CoreApi-7911-13: Onload stackname is not supported	This platform does not support setting the onload stackname.	Check documentation for list of platforms that support onload.
CoreApi-7911-14: Onload stack name must be 8 characters or less	Onload stackname is limited to 8 characters or less.	Optlen value must be 8 or less.
CoreApi-7911-15: optval must not be NULL	optval parameter cannot be NULL	
CoreApi-7911-16: optlen must not be NULL	optlen parameter cannot be NULL	
CoreApi-7911-17: optval is not large enough	Provided optlen was not large enough to contain stackname string	optlen now contains the minimum necessary size.
CoreApi-7911-4: Onload stackname is not supported	This platform does not support setting the onload stackname.	Check documentation for list of platforms that support onload.
CoreApi-7911-5: Onload stack name must be 8 characters or less	Onload stackname is limited to 8 characters or less.	Optlen value must be 8 or less.
CoreApi-8209-1: optlen incorrect size	Setting of the compatibility_↩include_pre_um_6_0_behavior configuration option is using the wrong size. Size is "int".	User needs to use the correct size when setting the configuration option.
CoreApi-8209-2: optval must be 0 or 1	The compatibility_include_pre↩_um_6_0_behavior configuration option must be a 0 or 1.	The user should set the option to 0 or 1.
CoreApi-8209-3: optval not numeric	Setting of the compatibility_↩include_pre_um_6_0_behavior configuration option is using a string value that is not a number.	The user needs to pass a number in the string.
CoreApi-8209-4: optval must be 0 or 1	The compatibility_include_pre↩_um_6_0_behavior configuration option must be a 0 or 1.	The user should set the option to 0 or 1.
CoreApi-8209-5: optlen incorrect size	Getting the compatibility_include↩_pre_um_6_0_behavior configuration option is using the wrong size. Size is "int".	User needs to use the correct size when getting the configuration option.
CoreApi-8209-6: optlen too small	Getting the compatibility_include↩_pre_um_6_0_behavior configuration option is using a string that is too small. Minimum string size is 80 bytes.	User needs to use the correct string size when getting the configuration option.
CoreApi-8243-1: optlen incorrect size	Attempted to set option delivery_↩control_message_batching with an incorrect optlen size.	Optlen must be size of int.
CoreApi-8243-29: Can't allocate memory [s:d]	The LBM JNI library could not create a new jni_rcv_t.	This usually indicates a severe out of memory condition.
CoreApi-8243-2: optval must be 0 or 1	Attempted to set option delivery_↩control_message_batching with an invalid optval.	Optval must be 0 or 1.
CoreApi-8243-30: Can't allocate memory [s:d]	The LBM JNI library could not create a managed ref to a receiver object.	This usually indicates a severe out of memory condition.

CoreApi-8243-31: Can't allocate memory [s:d]	The LBM JNI library could not create a receiver clientd object.	This usually indicates a severe out of memory condition.
CoreApi-8243-32: Can't allocate memory [s:d]	The LBM JNI library could not allocate a client callback object.	This usually indicates a severe out of memory condition.
CoreApi-8243-33: Can't allocate memory [s:d]	The LBM JNI library could not allocate a client callback object.	This usually indicates a severe out of memory condition.
CoreApi-8243-34: Can't allocate memory [s:d]	The LBM JNI library could not allocate global reference.	This usually indicates a severe out of memory condition.
CoreApi-8243-35: Can't allocate memory [s:d]	The LBM JNI library could not allocate a client callback object.	This usually indicates a severe out of memory condition.
CoreApi-8243-36: Can't allocate memory [s:d]	The LBM JNI library could not allocate a client callback object.	This usually indicates a severe out of memory condition.
CoreApi-8243-37: Can't allocate memory [s:d]	The LBM JNI library could not allocate a jni_rcv_t object.	This usually indicates a severe out of memory condition.
CoreApi-8243-38: Can't allocate memory [s:d]	The LBM JNI library could not create a new global reference.	This usually indicates a severe out of memory condition.
CoreApi-8243-39: Can't allocate memory [s:d]	The LBM JNI library could not create a new global reference.	This usually indicates a severe out of memory condition.
CoreApi-8243-3: optval not numeric	Attempted to set option delivery_↩control_message_batching with an invalid optval.	Optval must be numeric.
CoreApi-8243-41: Can't allocate memory [s:d]	The LBM JNI library could not allocate a client callback object.	This usually indicates a severe out of memory condition.
CoreApi-8243-42: Can't allocate memory [s:d]	The LBM JNI library could not allocate a client callback object.	This usually indicates a severe out of memory condition.
CoreApi-8243-43: Can't allocate memory [s:d]	The LBM JNI library could not allocate global reference.	This usually indicates a severe out of memory condition.
CoreApi-8243-44: Can't allocate memory [s:d]	The LBM JNI library could not allocate global reference.	This usually indicates a severe out of memory condition.
CoreApi-8243-45: Can't allocate memory [s:d]	The LBM JNI library could not allocate receiver clientd.	This usually indicates a severe out of memory condition.
CoreApi-8243-46: Can't allocate receiver topic attributes [s:d]	Receiver topic attributes could not be created; this probably indicates an out of memory condition.	This usually indicates a severe out of memory condition; check application memory use.
CoreApi-8243-4: optval not a number	Attempted to set option delivery_↩control_message_batching with an invalid optval.	Optval must be numeric.
CoreApi-8243-5: optval must be 0 or 1	Attempted to set option delivery_↩control_message_batching with an invalid optval.	Optval must be 0 or 1.
CoreApi-8243-6: optlen incorrect size	Attempted to retrieve option delivery_control_message_↩batching with an incorrect optlen size.	Optlen must be size of int.
CoreApi-8243-7: optlen too small	Attempted to retrieve option delivery_control_message_↩batching with an incorrect optlen size.	Optlen must be greater than LBM↩_MIN_SGET_OPTLEN.
CoreApi-8608-1: could not insert lbm_hf_order_rec_t sqn x into order ASL [s:d]	An attempt to update an internal data structure resulted in an error, probably due to lack of available memory.	Please contact Informatica Support and ensure your application has enough memory available to it.
CoreApi-8756-130: send would block	LBM_EWOULDBLOCK handling for the broker transport	This is not an error. The user needs to handle LBM_EWOULDBLOCK.

CoreApi-8787-2: optlen incorrect size	The user passed in a value of optlen that did not match up to the option's expected type's size.	Check the application code to be sure the correct option type (int, long, etc.) is being passed in.
CoreApi-8787-3: optval not numeric	A number was expected for this config option, but something else was pased in.	Check the code or config file that sets this option; make sure it is passing in a string with a number in it.
CoreApi-8787-4: optval not a number	A number was expected for this config option, but something else was pased in.	Check the code or config file that sets this option; make sure it is passing in a string with a number in it.
CoreApi-8787-5: optlen incorrect size	The user passed in a value of optlen that did not match up to the option's expected type's size.	Check the application code to be sure the correct option type (int, long, etc.) is being passed in.
CoreApi-8787-6: optlen too small	The buffer given is too small to write the option value to.	Check that the size of the buffer being passed in is at least LBM_MI↩N_SGET_OPTLEN bytes.
CoreApi-8812-1: Configured request_tcp_port_low (u) is greater than configured request_tcp_↩port_high (u)	The configured "context request_↩tcp_port_low" option is higher than the configured "context request_↩tcp_port_high" option, which is not allowed.	Correct configuration to specify "context request_tcp_port_low" <= "context request_tcp_port_high"
CoreApi-8812-2: Configured LBT-TCP transport_tcp_port_low (u) is greater than configured transport↩_tcp_port_high (u)	The configured "context transport↩_tcp_port_low" option is higher than the configured "context transport_tcp_port_high" option, which is not allowed.	Correct configuration to specify "context transport_tcp_port_low" <= "context transport_tcp_port_↩high"
CoreApi-8812-3: Configured LB↩MD resolver_unicast_port_low (u) is greater than the configured resolver_unicast_port_high (u)	The configured "context resolver↩_unicast_port_low" option is higher than the configured "context resolver_unicast_port_high" option, which is not allowed.	Correct configuration to specify "context resolver_unicast_port↩_low" <= "context resolver_↩unicast_port_high"
CoreApi-8812-4: Configured L↩BT-RM transport_lbtrm_source_↩port_low (u) is greater than configured transport_lbtrm_source_↩port_high (u)	The configured "context transport↩_lbtrm_source_port_low" option is higher than the configured "context transport_lbtrm_source_port↩_high" option, which is not allowed.	Correct configuration to specify "context transport_lbtrm_source↩_port_low" <= "context transport↩_lbtrm_source_port_high"
CoreApi-8812-5: Configured LB↩T-RM transport_lbtrm_multicast↩_address_low (s) is greater than configured transport_lbtrm_↩multicast_address_high (s)	The configured "context transport↩_lbtrm_multicast_address_low" option is higher than the configured "context transport_lbtrm_↩multicast_address_high" option, which is not allowed.	Correct configuration to specify "context transport_lbtrm_↩multicast_address_low" <= "context transport_lbtrm_multicast_↩address_high"
CoreApi-8812-6: Configured LB↩T-RU transport_lbtru_port_low (u) is greater than the configured transport_lbtru_port_high (u)	The configured "context transport↩_lbtru_port_low" option is higher than the configured "context transport_lbtru_port_high" option, which is not allowed.	Correct configuration to specify "context transport_lbtru_port_low" <= "context transport_lbtru_port↩_high"
CoreApi-8812-7: Configured LB↩T-IPC transport_lbtipc_id_low (u) is greater than configured transport↩_lbtipc_id_high (u)	The configured "context transport↩_lbtipc_id_low" option is higher than the configured "context transport_lbtipc_id_high" option, which is not allowed.	Correct configuration to specify "context transport_lbtipc_id_low" <= "context transport_lbtipc_id_↩high"

CoreApi-8812-8: Configured LBT-RDMA transport_lbtrdma_port_low (u) is greater than configured transport_lbtrdma_port_high (u)	The configured "context transport_lbtrdma_port_low" option is higher than the configured "context transport_lbtrdma_port_high" option, which is not allowed.	Correct configuration to specify "context transport_lbtrdma_port_low" <= "context transport_lbtrdma_port_high"
CoreApi-8812-9: Configured LBT-RU transport_lbtru_port_low (u) is greater than the configured transport_lbtru_port_high (u)	The configured "receiver transport_lbtru_port_low" option is higher than the configured "receiver transport_lbtru_port_high" option, which is not allowed.	Correct configuration to specify "receiver transport_lbtru_port_low" <= "receiver transport_lbtru_port_high"
CoreApi-8840-1: event queue monitor transport opts value cannot start with a ""	The event queue monitor transport options string is malformed.	Remove the quote marks from the event queue monitor transport options string, if any.
CoreApi-8840-2: event queue monitor transport opts value cannot start with a ""	The event queue monitor transport options string is malformed.	Remove the quote marks from the event queue monitor transport options string, if any.
CoreApi-8840-4: context monitor transport opts value cannot start with a ""	The context monitor transport options string is malformed.	Remove the quote marks from the context monitor transport options string, if any.
CoreApi-8840-5: context monitor transport opts value cannot start with a ""	The context monitor transport options string is malformed.	Remove the quote marks from the context monitor transport options string, if any.
CoreApi-8901-100: invalid Broker configuration: need to configure broker (context) location to use broker transport (source)	The transport (source) is broker but the broker location has not be set	The user needs to check their configuration
CoreApi-8901-101: invalid Broker configuration: transport (source) must be broker with broker (context) location	Setting broker location restricts transport (source) to broker	The user needs to check their configuration
CoreApi-8901-102: Source transport Broker not supported in non-Broker build	To use the Broker transport, the build needs to be Broker enabled.	Call sales.
CoreApi-8901-112: lbm_imbq_create CreateMutex	We failed to create a mutex on Windows; this probably indicates resource exhaustion.	Check machine for excessive memory use or excessive open handles (both can be viewed in Task Manager)
CoreApi-8901-113: lbm_imbq_create CreateSemaphore	We failed to create a semaphore on Windows; this probably indicates resource exhaustion.	Check machine for excessive memory use or excessive open handles (both can be viewed in Task Manager)
CoreApi-8901-61: Broker has been configured with non-Broker capable build	To use the Broker transport, the build needs to be Broker enabled.	Call sales to get broker capable build.
CoreApi-8904-50: optlen incorrect size	The option size is incorrect for the broker (context) configuration option	Make sure the user specifies the correct option size: sizeof(lbm_transport_broker_entry_t)
CoreApi-8904-51: optval too long	The broker (context) string setter option length is too long	The user should check the parameters passed to the setter
CoreApi-8904-52: optval is malformed	The broker (context) interface option is malformed	The user needs to check the broker (context) configuration option
CoreApi-8904-53: optval is malformed	The broker (context) IP addess option is malformed	The user needs to check the broker (context) configuration option
CoreApi-8904-54: optval is malformed	The broker (context) IP addess option is malformed	The user needs to check the broker (context) configuration option

CoreApi-8904-55: optval is malformed	The broker (context) interface option is malformed	The user needs to check the broker (context) configuration option
CoreApi-8904-56: optval is malformed	The broker (context) IP addess option is malformed	The user needs to check the broker (context) configuration option
CoreApi-8904-57: optval is malformed	The broker (context) option is malformed	The user needs to check the broker (context) configuration option
CoreApi-8904-58: optval is malformed	The broker (context) option is malformed	The user needs to check the broker (context) configuration option
CoreApi-8904-59: optval is too small to hold information, optlen set to required value	The user needs to allocate enough room for all broker (context) options set	The user needs to check their get option usage
CoreApi-8904-60: optval is too small to hold information, optlen set to required value	The user needs to allocate enough room for all broker (context) options set	The user needs to check their get option usage
CoreApi-8913-11: Explicit ACK feature is not supported for messages received via broker receiver	Explicit ACK is called for message received from broker receiver.	lbm_msg_umq_send_explicit_ack can not be called for messages from broker receiver.
CoreApi-8913-20: msg must be valid	Invalid Message.	lbm_msg_umq_can_send_↩ explicit_ack must be called with a valid message.
CoreApi-8913-2: Source is not connected to broker, and it has not initiated logical connection.	Application tried to send before logical connection to broker is established	Wait for source event that signals registration complete
CoreApi-8913-3: Source in the process of establishing connection to broker and it has not been established the connection yet	Application tried to send before logical connection to broker is established	Wait for source event that signals registration complete
CoreApi-8913-5: Source can not be configured as broker and ume source	An lbm source can not be configured as broker and UME source concurrently	Configure lbm source as UME or Broker source but not both
CoreApi-8913-6: Source can not be configured as broker and ulb source	An lbm source can not be configured as broker and ulb source concurrently	Configure lbm source as ULB or Broker source but not both
CoreApi-8913-7: Broker source can not be in a daemon	Broker source is created in DRO	Contact Informatica Support
CoreApi-8913-9: lbm_msg_umq↩ _reassign function is called without DISCARD flag	lbm_msg_umq_reassign function is called without DISCARD flag	lbm_msg_umq_reassign can only be called to discard a message at broker
CoreApi-8979-1: optlen incorrect size	The oplen parameter is incorrect.	Optlen must be sizeof(int).
CoreApi-8979-2: optval not numeric	Optval is not numeric.	The optval string must consist of numbers and an optional sign only.
CoreApi-8979-3: timeout value d invalid, must be between -1 and 2,147,483,647 (inclusive).	Optval is out of range.	The optval must be within the range specified.
CoreApi-8979-4: optlen incorrect size	The oplen parameter is incorrect.	Optlen must be sizeof(int).
CoreApi-8979-5: optlen too small	Optlen is too small.	Optlen should be at least LBM_M↩ IN_SGET_OPTLEN.
CoreApi-9000-1: brokered context cannot support wildcards	Wildcard Receivers are not supported with brokered contexts.	Inform the user of the restriction when using brokered context.
CoreApi-9001-1: brokered context cannot send MIM messages	A context configured exclusively for the broker transport does not support Immediate Messaging	The user could create multiple contexts and selectively configure them as brokered

CoreApi-9001-2: brokered context cannot send MIM requests	A context configured exclusively for the broker transport does not support Immediate Requests	The user could create multiple contexts and selectively configure them as brokered
CoreApi-9001-3: lbm_queue_↩immediate_message is no longer supported	Queue Immediate Messaging is no longer supported.	The user needs to use the new Active MQ broker features.
CoreApi-9001-4: brokered context cannot send UIM messages	A context configured exclusively for the broker transport does not support Immediate Messaging	The user could create multiple contexts and selectively configure them as brokered
CoreApi-9001-5: brokered context cannot send UIM requests	A context configured exclusively for the broker transport does not support Immediate Requests	The user could create multiple contexts and selectively configure them as brokered
CoreApi-9011-1: Hot-Failover Receivers are not allowed with a brokered context	User attempted to create a Hot Failover receiver with a Broker Context, which is not supported.	The user will not be able to use Hot Failover receivers
CoreApi-9013-1: optlen incorrect size	Attempted to set option resolver↩_unicast_ignore_unknown_source with an incorrect optlen size.	Optlen must be size of int.
CoreApi-9013-2: optval must be 0 or 1	Attempted to set option resolver↩_unicast_ignore_unknown_source with an invalid optval.	Optval must be 0 or 1.
CoreApi-9013-3: optval not numeric	Attempted to set option resolver↩_unicast_ignore_unknown_source with an invalid optval.	Optval must be numeric.
CoreApi-9013-4: optval not a number	Attempted to set option resolver↩_unicast_ignore_unknown_source with an invalid optval.	Optval must be numeric.
CoreApi-9013-5: optval must be 0 or 1	Attempted to set option resolver↩_unicast_ignore_unknown_source with an invalid optval.	Optval must be 0 or 1.
CoreApi-9013-6: optlen incorrect size	Attempted to retrieve option resolver_unicast_ignore_↩unknown_source with an incorrect optlen size.	Optlen must be size of int.
CoreApi-9013-7: optlen too small	Attempted to retrieve option resolver_unicast_ignore_↩unknown_source with an incorrect optlen size.	Optlen must be greater than LBM↩_MIN_SGET_OPTLEN.
CoreApi-9021-1: optval not numeric	The option value string submitted contains non numeric characters.	Be sure there are no trailing non numeric characters such as spaces and that the number is not in hexadecimal.
CoreApi-9021-2: optval must be 0 or 1	ume_quasar_flight_size_behavior can either be set "ON" or "OFF"	Please use "0" to indicate "OFF" and "1" to indicate "ON"
CoreApi-9021-3: optlen incorrect size	The space provided to store the option was insufficient.	Increase the size of the buffer to 4 bytes.
CoreApi-9021-4: Optlen must equal sizeof(int).	The optlen parameter must equal sizeof(int).	Ensure that optval buffer has at least sizeof(int) space available and that oplet is set to sizeof(int)
CoreApi-9021-5: optval must be 1 or 0.	The optval must be 1 or 0.	Ensure that optval is either set to 1 or 0.
CoreApi-9021-6: optlen not large enough to hold value	The optlen parameter indicated that optval was not large enough to hold the entire value.	Ensure that optval buffer has at least 2 bytes available and that optlen is greater than 2.

CoreApi-9044-1: Call to s is not allowed for broker receivers, ignoring the function call	Deprecated UMQ Index Queuing function is called	Don't use deprecated UMQ Index Queuing API
CoreApi-9047-2: src cannot be N↩ULL	Calling lbm_src_unblock with a N↩ULL source is not allowed.	The user should make sure a valid source is passed as a parameter.
CoreApi-9048-1: brokered contexts do not support channel sources	Creating Source Channels is not supported on a brokered context.	The user should be informed of this limitation.
CoreApi-9074-1: Queue deregistration is no longer allowed when using a brokered context	No longer allowed to deregister from a queue.	Remove function call.
CoreApi-9082-2: **lbm_umq_ctx↩_msg_stable()** API is deprecated	The lbm_umq_ctx_msg_stable is deprecated and no longer supported.	Remove this API call from the application.
CoreApi-9082-3: **lbm_ctx_umq↩_get_inflight()** API is deprecated	The lbm_ctx_umq_get_inflight is deprecated and no longer supported.	Remove this API call from the application.
CoreApi-9087-1: send would block because of flight size	This send would cause the configured flight size to exceed the configured value for this source.	Delay sending until the number inflight messages is reduced.
CoreApi-9089-4: Call to s is not allowed for broker receivers, ignoring the function call	Deprecated API is called for Brokered receivers	Don't use deprecated API for Brokered receivers
CoreApi-9089-5: Call to s is not expected for broker receivers, ignoring the function call	Call to the function is not expected for broker receivers	Contact Informatica Support
CoreApi-9106-10: optval must be 0 or 1	Invalid value for optval	optval must be 0 or 1
CoreApi-9106-111: WARNING↩: could not set SO_TIMESTAMPI↩NG on multicast source socket: s	An error was returned from the OS while trying to set the SO_TIM↩ESTAMPING flag on the source socket.	SO_TIMESTAMPING is not supported by this platform.
CoreApi-9106-11: optlen incorrect size	Size of optlen was incorrect	optlen size must be size of int
CoreApi-9106-121: WARNING↩: could not set SO_TIMESTAMPI↩NG on multicast receive socket: s	An error was returned from the OS while trying to set the SO_TIM↩ESTAMPING flag on the receive socket.	SO_TIMESTAMPING is not supported by this platform.
CoreApi-9106-12: optlen too small	Size of optlen was too small	Size of optlen must be at least 80
CoreApi-9106-1: optlen incorrect size	Size of optlen was incorrect for setting integer option	optlen must be size of int
CoreApi-9106-2: optval must be 0 or 1	Invalid value for optval	optval must be 0 or 1
CoreApi-9106-30: High Resolution Timestamps are only supported on Linux platforms for LBT-RM.	Option not valid on this platform.	Requires LBT-RM and at least Linux 2.6.32 and glibc 2.12.
CoreApi-9106-31: High Resolution Timestamps are only supported on Linux platforms for LBT-RM.	Option not valid on this platform.	Requires LBT-RM and at least Linux 2.6.32 and glibc 2.12.
CoreApi-9106-32: High Resolution Timestamps are only supported on Linux platforms for LBT-RM.	Option not valid on this platform.	Requires LBT-RM and at least Linux 2.6.32 and glibc 2.12.
CoreApi-9106-33: High Resolution Timestamps are only supported on Linux platforms for LBT-RM.	Option not valid on this platform.	Requires LBT-RM and at least Linux 2.6.32 and glibc 2.12.

CoreApi-9106-3: optval not numeric	Option string was not a number	Provide number as a string
CoreApi-9106-4: optval must be 0 or 1	Invalid value for optval	optval must be 0 or 1
CoreApi-9106-5: optlen incorrect size	Size of optlen was incorrect	optlen size must be size of int
CoreApi-9106-6: optlen too small	Size of optlen was too small	Size of optlen must be at least 80
CoreApi-9106-7: optlen incorrect size	Size of optlen was incorrect for setting integer option	optlen must be size of int
CoreApi-9106-8: optval must be 0 or 1	Invalid value for optval	optval must be 0 or 1
CoreApi-9106-9: optval not numeric	Option string was not a number	Provide number as a string
CoreApi-9160-3: multicast receive IP_ADD_MEMBERSHIP: s	An error was returned from the OS while trying to set the socket option IP_ADD_MEMBERSHIP.	Refer to the OS error number and message given after the UMS message "multicast receive IP_ADD↩ R_MEMBERSHIP".
CoreApi-9170-1: optlen incorrect size	The oplen parameter is incorrect.	Optlen must be sizeof(int).
CoreApi-9170-2: optval not numeric	Optval is not numeric.	The optval string must consist of numbers and an optional sign only.
CoreApi-9170-3: value must be greater than or equal to zero	Optval is out of range.	The optval must be within the range specified.
CoreApi-9170-4: optlen incorrect size	The oplen parameter is incorrect.	Optlen must be sizeof(int).
CoreApi-9170-5: optlen too small	Optlen is too small.	Optlen should be at least LBM_M↩ IN_SGET_OPTLEN.
CoreApi-9206-1: Broker source does not support application chain headers	Broker source send call is called with application chain headers	Broker sources does not support application chain headers
CoreApi-9277-01: registering a file descriptor/socket event is not allowed with a brokered context	A brokered context does not support user File Descriptors	The customer can create a separate non-brokered context to manage File Descriptors
CoreApi-9278-01: Hot-Failover Sources are not allowed with a brokered context	User attempted to create a Hot Failover source with a Broker Context, which is not supported.	The user should not use Hot Failover sources
CoreApi-9279-1: Round-Robin cannot be used with flight size in fragments and in order stability	Flight size in fragments and in order stability enabled, but the ume↩ _store_behavior option is set to Round-Robin.	Change the ume_store_behavior option to quorum-consensus to use this feature.
CoreApi-9280-01: lbm_send_↩ request and lbm_send_request_ex are not supported with transport type BROKER	User tried to send a request via a source set to use the BROKER transport; this is not currently supported.	Don't send requests on BROKER sources.
CoreApi-9289-1: Broker source can not send messages with numerical index, use named UMQ index instead	Send call is called with arguments to send numerical index.	Numerical Index feature is not supported, use named UMQ index instead
CoreApi-9310-1: XML configuration has already been loaded.	An XML configuration has already been loaded via UMM and can not be overridden by loading a different XML configuration.	Modify the application to not attempt to load a second XML configuration.
CoreApi-9310-2: XML configuration has already been loaded.	An XML configuration has already been loaded via UMM and can not be overridden by loading a different XML configuration.	Modify the application to not attempt to load a second XML configuration.

CoreApi-9346-1: ack must be valid	Tried to call api with NULL ack pointer.	Pass a valid ack pointer instead of NULL
CoreApi-9352-1: Use of ume_↩recovery_complete_event requires ordered delivery to be enabled.	An invalid configuration combination of the ume recovery complete event and non-ordered delivery was encountered.	Configure this receiver with ordered delivery or disable the ume recovery complete event.
CoreApi-9352-31: optlen incorrect size	size of the option is incorrect	optlen must be a lbm_uint8_t
CoreApi-9352-32: invalid ume_↩recovery_complete_event setting	ume_recovery_complete_event set to invalid value	ume_recovery_complete_event should be 0 or 1
CoreApi-9352-33: optval not numeric	optval is not a number	optval needs to be numeric only
CoreApi-9352-34: invalid ume_↩recovery_complete_event setting	ume_recovery_complete_event set to invalid value	ume_recovery_complete_event must be 0 or 1
CoreApi-9352-35: optlen incorrect size	optlen is not a lbm_uint8_t	optlen should be a lbm_uint8_t
CoreApi-9352-36: optlen too small	optlen is too small	optlen needs to be at least 80
CoreApi-9401-1: optlen incorrect size	The size of the optlen given does not match the size of this option type.	Provide an optlen the size of a lbm_ipv4_address_mask_t.
CoreApi-9401-2: optlen incorrect size	The size of the optlen given does not match the size of this option type.	Provide an optlen the size of lbm↩_ipv4_address_mask_t.
CoreApi-9401-3: optlen too small	The size of the buffer passed in was less than the minimum buffer size required.	Make sure the buffer is at least L↩BM_MIN_SGET_OPTLEN bytes in size.
CoreApi-9524-1: Can't convert applicationName, out of memory [s:d]	An attempt to allocate memory failed.	Check for memory leaks or other aberrent program behavior. Otherwise, ensure the applicaiton has adequate resources available.
CoreApi-9524-2: Can't convert application name, out of memory [s:d]	An attempt to allocate memory failed.	Check for memory leaks or other aberrent program behavior. Otherwise, ensure the applicaiton has adequate resources available.
CoreApi-9561-1: No response struct in message [s:d]	The application tried to retrieve a serialized response but there is no response structure in the message.	The message type must be a request message (not data). Do not call this method on any other type of message.
CoreApi-9561-2: Error serializing response [s:d]	The application tried to retrieve a serialized response but failed while serializing the response.	This usually indicates a severe out of memory condition.
CoreApi-9561-3: Byte array not large enough to hold serialized response [s:d]	The application tried to retrieve a serialized response but failed while serializing the response.	The provided byte array was not large enough to hold the serialized response. Provide a large byte array
CoreApi-9561-4: Serialized response length of d was larger than expected length of d JNI layer [s:d]	Serialized response length was bigger than expected value for a serialized response.	Ensure byte array being passed contains the serialized response of expected length.
CoreApi-9561-5: Context pointer was null in JNI layer [s:d]	Context pointer was null in JNI layer while sending response.	Ensure responses are not being sent after closing a context.
CoreApi-9561-6: Can't allocate response data buffer of u bytes [s:d]	Could not malloc a data buffer.	This usually indicates a severe out of memory condition.
CoreApi-9565-100: optlen incorrect size	The size of the optval given does not match the size of this option type.	Provide an optval of the appropriate size for this option type.

CoreApi-9565-101: unrecognized compression algorithm not supported	An unsupported or unknown compression algorithm name was specified.	Check configuration for typos and make sure the UM version supports any algorithms specified.
CoreApi-9565-102: optval not understood	An unsupported or unknown compression algorithm was specified.	Check configuration for typos and make sure the UM version supports any algorithms specified.
CoreApi-9565-103: optlen incorrect size	The size of the optval given does not match the size of this option type.	Provide an optval of the appropriate size for this option type.
CoreApi-9565-104: optlen too small	The provided buffer is too small to hold the option value.	Provide a larger buffer.
CoreApi-9565-105: Security protocol string must be at least u bytes in length	Security protocols string is too short.	Check configuration for typos.
CoreApi-9565-106: optlen incorrect size	Buffer passed in is too small to hold the string value of the option.	Pass in a larger buffer.
CoreApi-9565-107: optlen incorrect size	Buffer passed in is too small to hold the string value of the option.	Pass in a larger buffer.
CoreApi-9565-108: The OpenS↩SL library failed to initialize, so TLS cannot be used.	The OpenSSL library failed to initialize correctly, so the TLS security protocol cannot be supported.	Check OpenSSL library version; contact Informatica support.
CoreApi-9565-10: optlen too small	Provided buffer is too small for the list of protocols returned.	Pass in a larger buffer.
CoreApi-9565-11: The TLS security protocol is not supported with source transports other than LB↩T-TCP	The TLS security protocol is not supported on any transport other than LBT-TCP; in order to avoid a false sense of security, we do not allow TLS to be specified for non-↩TCP sources.	The user needs to check their configuration
CoreApi-9565-12: If late join is enabled, source security and/or compression settings must match those of the context request port.	Security and compression settings between the TCP source and the context's request port differ. This is not supported for security reasons.	The user needs to check their configuration and make sure TCP source and request port security and compression settings match.
CoreApi-9565-13: Too many security protocols specified in list.	Too many protocols were specified in a protocol list.	Check configuration and make sure there are no duplicate protocols specified.
CoreApi-9565-14: Malformed security protocol name.	A security protocol name was formatted incorrectly.	Check configuration files for typos.
CoreApi-9565-15: Security protocol "%s" unknown or not supported	An unknown security protocol was specified.	Check configuration for mistakes or typos. Make sure the version of UM used supports the protocols specified.
CoreApi-9565-16: Duplicate security protocols in list.	A duplicate protocol was specified in a protocol list.	Check configuration and remove any duplicate protocols.
CoreApi-9565-17: Too many security protocols specified.	Too many protocols were specified in a protocol list.	Check configuration to see if extra protocols were specified; check UM version to make sure it supports all specified protocols.
CoreApi-9565-18: Unknown or unsupported security protocol specified.	An unknown protocol was specified in a protocol list.	Check configuration to see if extra protocols were specified; check UM version to make sure it supports all specified protocols.

CoreApi-9565-19: Security protocol list contains duplicate entries.	A duplicate protocol was present in a protocol list.	Check configuration to see if extra protocols were specified; check UM version to make sure it supports all specified protocols.
CoreApi-9565-20: At least one security protocol must be specified.	No protocols were specified in a protocol list.	Make sure at least one protocol is specified.
CoreApi-9565-21: LZ4 could not compress data of length u; set datagram max size option to a smaller value.	LZ4 compression would *expand* the data given to a size greater than the configured max datagram size.	This should usually not happen unless the max datagram size for TCP transports is set to something very small; check the value of the max datagram option.
CoreApi-9565-22: LZ4 could not compress data of length u; an internal error occurred	LZ4 compression failed somehow.	Contact Informatica support.
CoreApi-9565-23: LZ4 compressed data appears corrupt; decompressed u bytes, but expected u bytes	LZ4 decompression failed.	This could happen due to corruption of the data in a TCP stream or an internal LZ4 error. Contact Informatica support.
CoreApi-9565-3: Too many security protocols specified.	Too many security protocols were specified in the security protocol list.	Make sure no duplicate protocols were specified.
CoreApi-9565-44: Could not allocate cipher name.	Allocating the cipher name string failed; this probably means UM is out of memory.	Contact Informatica support.
CoreApi-9565-45: optlen incorrect size	Buffer provided was too small to hold the configured value.	Pass in a larger buffer.
CoreApi-9565-47: optlen incorrect size	Buffer passed in is too small to hold the string value of the option.	Pass in a larger buffer.
CoreApi-9565-48: optlen incorrect size	Buffer passed in is too small to hold the string value of the option.	Pass in a larger buffer.
CoreApi-9565-49: optlen incorrect size	Buffer passed in is too small to hold the string value of the option.	Pass in a larger buffer.
CoreApi-9565-4: Unknown or unsupported security protocol specified.	An unknown protocol was specified.	Check configuration for typos and check UM library version to make sure it supports the specified protocol.
CoreApi-9565-50: optlen incorrect size	Buffer passed in is too small to hold the string value of the option.	Pass in a larger buffer.
CoreApi-9565-51: optlen incorrect size	Buffer passed in is too small to hold the string value of the option.	Pass in a larger buffer.
CoreApi-9565-52: optlen incorrect size	Buffer passed in is too small to hold the string value of the option.	Pass in a larger buffer.
CoreApi-9565-53: optlen incorrect size	Buffer passed in is too small to hold the string value of the option.	Pass in a larger buffer.
CoreApi-9565-54: optlen incorrect size	Buffer passed in is too small to hold the string value of the option.	Pass in a larger buffer.
CoreApi-9565-55: optlen incorrect size	Buffer passed in is too small to hold the string value of the option.	Pass in a larger buffer.
CoreApi-9565-56: optlen incorrect size	Buffer passed in is too small to hold the string value of the option.	Pass in a larger buffer.
CoreApi-9565-57: optlen incorrect size	The provided buffer is too small to hold the option value.	Provide a larger buffer.
CoreApi-9565-58: optlen incorrect size	The provided buffer is too small to hold the option value.	Provide a larger buffer.

CoreApi-9565-59: optlen incorrect size	The provided buffer is too small to hold the option value.	Provide a larger buffer.
CoreApi-9565-5: Security protocol list contains duplicate entries.	Specified protocol list has one or more duplicate values.	Remove duplicate entries from the protocol list.
CoreApi-9565-60: optlen incorrect size	The provided buffer is too small to hold the option value.	Provide a larger buffer.
CoreApi-9565-61: optlen incorrect size	The provided buffer is too small to hold the option value.	Provide a larger buffer.
CoreApi-9565-62: optlen incorrect size	The size of the optval given does not match the size of this option type.	Provide an optval of the appropriate size for this option type.
CoreApi-9565-63: optval must be 0 or 1	This option can only be set to 0 or 1, but something else was specified.	Check configuration options for typos.
CoreApi-9565-64: optval not numeric	This option is a numeric type, but a non-numeric string was given in optval.	Check configuration options for typos.
CoreApi-9565-65: optval not a number	This option is a numeric type, but a non-numeric string was given in optval.	Check configuration options for typos.
CoreApi-9565-66: optlen incorrect size	The size of the optval given does not match the size of this option type.	Provide an optval of the appropriate size for this option type.
CoreApi-9565-67: optlen too small	The provided buffer is too small to hold the option value.	Provide a larger buffer.
CoreApi-9565-68: optlen incorrect size	The size of the optval given does not match the size of this option type.	Provide an optval of the appropriate size for this option type.
CoreApi-9565-69: unrecognized compression algorithm not supported	Option was set to an unsupported value.	Check configuration and UM version for support of the value configured.
CoreApi-9565-6: Sources may not support both "none" and any other security protocols at the same time.	A source must have only one security protocol configured.	Change the security protocol list to have only one entry.
CoreApi-9565-70: optval not understood	Option was set to an unsupported value.	Check configuration and UM version for support of the value configured.
CoreApi-9565-71: optlen incorrect size	The size of the optval given does not match the size of this option type.	Provide an optval of the appropriate size for this option type.
CoreApi-9565-72: optlen too small	The provided buffer is too small to hold the option value.	Provide a larger buffer.
CoreApi-9565-73: optlen incorrect size	The size of the optval given does not match the size of this option type.	Provide an optval of the appropriate size for this option type.
CoreApi-9565-74: optval not numeric	This option is a numeric type, but a non-numeric string was given in optval.	Check configuration options for typos.
CoreApi-9565-75: optval not a number	This option is a numeric type, but a non-numeric string was given in optval.	Check configuration options for typos.
CoreApi-9565-76: optlen incorrect size	The size of the optval given does not match the size of this option type.	Provide an optval of the appropriate size for this option type.

CoreApi-9565-77: optlen too small	The provided buffer is too small to hold the option value.	Provide a larger buffer.
CoreApi-9565-78: optlen incorrect size	The size of the optval given does not match the size of this option type.	Provide an optval of the appropriate size for this option type.
CoreApi-9565-79: optval not numeric	This option is a numeric type, but a non-numeric string was given in optval.	Check configuration options for typos.
CoreApi-9565-7: At least one security protocol must be specified.	No protocols were specified at all - not even the "none" protocol.	At least one protocol must be specified.
CoreApi-9565-80: optval not a number	This option is a numeric type, but a non-numeric string was given in optval.	Check configuration options for typos.
CoreApi-9565-81: optlen incorrect size	The size of the optval given does not match the size of this option type.	Provide an optval of the appropriate size for this option type.
CoreApi-9565-82: optlen too small	The provided buffer is too small to hold the option value.	Provide a larger buffer.
CoreApi-9565-84: optlen incorrect size	Size of optval passed in is not correct for this option.	Check the size of the optval to make sure it is the correct size for this configuration option type.
CoreApi-9565-85: optval not numeric	Option value must be a number and is not.	Check configuration.
CoreApi-9565-86: optval not a number	Option value must be a number and is not.	Check configuration.
CoreApi-9565-87: optlen incorrect size	Size of optval passed in is not correct for this option.	Check the size of the optval to make sure it is the correct size for this configuration option type.
CoreApi-9565-88: optlen too small	Buffer is too small to hold the string value of the option.	Pass in a larger buffer.
CoreApi-9565-89: optlen incorrect size	Size of optval passed in is not correct for this option.	Check the size of the optval to make sure it is the correct size for this configuration option type.
CoreApi-9565-8: Sources may not support both "none" and any other security protocols at the same time.	A source must have only one security protocol configured.	Change the security protocol list to have only one entry.
CoreApi-9565-90: optval not numeric	Option must be a number and is not.	Check configuration.
CoreApi-9565-91: optval not a number	Option must be a number and is not.	Check configuration.
CoreApi-9565-92: optlen incorrect size	Size of optval passed in is not correct for this option.	Check the size of the optval to make sure it is the correct size for this configuration option type.
CoreApi-9565-93: optlen too small	Buffer is too small to hold the string value of the option.	Pass in a larger buffer.
CoreApi-9565-94: optlen incorrect size	The size of the optval given does not match the size of this option type.	Provide an optval of the appropriate size for this option type.
CoreApi-9565-95: optval must be 0 or 1	Option is numeric and must be set to either 0 or 1.	Check config for typos.
CoreApi-9565-96: optval not numeric	Option is numeric and must be set to either 0 or 1.	Check config for typos.
CoreApi-9565-97: optval must be 0 or 1	Option is numeric and must be set to either 0 or 1.	Check config for typos.

CoreApi-9565-98: optlen incorrect size	The size of the optval given does not match the size of this option type.	Provide an optval of the appropriate size for this option type.
CoreApi-9565-99: optlen too small	The provided buffer is too small to hold the option value.	Provide a larger buffer.
CoreApi-9565-9: At least one security protocol must be specified.	No protocols were specified at all - not even the "none" protocol.	At least one protocol must be specified.
CoreApi-9566-10: Can't allocate u bytes [s:d]	The system was not able to allocate the amount of memory requested.	If the amount requested was particularly large, the problem may be a misconfiguration; however if the amount requested was relatively small, the physical memory on the machine may be over committed; try moving some applications to another machine.
CoreApi-9566-4: Can't allocate u bytes [s:d]	The system was not able to allocate the amount of memory requested.	If the amount requested was particularly large, the problem may be a misconfiguration; however if the amount requested was relatively small, the physical memory on the machine may be over committed; try moving some applications to another machine.
CoreApi-9566-5: Can't allocate u bytes [s:d]	The system was not able to allocate the amount of memory requested.	If the amount requested was particularly large, the problem may be a misconfiguration; however if the amount requested was relatively small, the physical memory on the machine may be over committed; try moving some applications to another machine.
CoreApi-9566-6: Can't allocate u bytes [s:d]	The system was not able to allocate the amount of memory requested.	If the amount requested was particularly large, the problem may be a misconfiguration; however if the amount requested was relatively small, the physical memory on the machine may be over committed; try moving some applications to another machine.
CoreApi-9566-7: Can't allocate callback vector of u bytes [s:d]	The system was not able to allocate the amount of memory requested.	The physical memory on the machine may be over committed; try moving some applications to another machine.
CoreApi-9566-9: Can't allocate u bytes [s:d]	The system was not able to allocate the amount of memory requested.	If the amount requested was particularly large, the problem may be a misconfiguration; however if the amount requested was relatively small, the physical memory on the machine may be over committed; try moving some applications to another machine.
CoreApi-9571-01: network interface specification is too long	The network interface specification is limited to 258 characters in length and has the format "host_↩ domain_name[/num]" where "num" is the optional number of leading 1 bits in the netmask applied to the resolved IP address.	Provide a specification that is less than 258 characters in length.

CoreApi-9571-02: malformed network interface specification	The network interface specification is limited to 258 characters in length and has the format "host_↩ domain_name[/num]" where "num" is the optional number of leading 1 bits in the netmask applied to the resolved IP address.	Provide a valid interface specification. See RFCs 952 and 1123 for DNS naming conventions.
CoreApi-9571-03: malformed network interface specification	The network interface specification is limited to 258 characters in length and has the format "host_↩ domain_name[/num]" where "num" is the optional number of leading 1 bits in the netmask applied to the resolved IP address.	Provide a valid interface specification. See RFCs 952 and 1123 for DNS naming conventions.
CoreApi-9571-04: malformed network interface specification with network mask	The CIDR (Classless Inter-Domain Routing) notation is a syntax for specifying IP addresses and their associated routing prefix. It appends a slash character to the address and the decimal number of leading bits of the routing prefix, e.g., host_domain_name/24. The valid range of values is 0-32 inclusive.	Provide a valid interface specification.
CoreApi-9571-05: invalid netmask value	The CIDR (Classless Inter-Domain Routing) notation is a syntax for specifying IP addresses and their associated routing prefix. It appends a slash character to the address and the decimal number of leading bits of the routing prefix, e.g., host_domain_name/24. The valid range of values is 0-32 inclusive.	Specify a valid decimal value to define the number of bits in the mask prefix.
CoreApi-9571-06: hostname is too short	The domain host name must be at least 2 characters long.	Provide a host domain name that is at least 2 characters in length.
CoreApi-9571-07: unknown host name: s	The DNS lookup, using gethostbyname() with supplied host name, failed to resolve to an IP address.	Verify the host domain name.
CoreApi-9571-08: unknown IPv4 host name: s	The DNS lookup, using gethostbyname() with supplied host name, failed to resolve to an IPv4 address.	Verify the host domain name refers to an IPv4 address.
CoreApi-9571-09: invalid address	The IP address returned by the DNS lookup failed to convert the Internet host address character string from the IPv4 dotted-decimal notation into binary form (in network byte order).	Contact Informatica customer support.
CoreApi-9571-11: domain name is too long	The domain name is limited to 258 characters in length.	Provide a domain name that is less than 258 characters in length.
CoreApi-9571-12: malformed domain name	The domain name is a text string of 2 to 80 characters in length drawn from a mix of alphbetic (a-z), digit (0-9), the minus sign (-), and period (.) characters.	Provide a valid name. See RFCs 952 and 1123 for DNS naming conventions.
CoreApi-9571-13: hostname is too short	The name must be at least 2 characters long.	Provide a name that is at least 2 characters in length.

CoreApi-9571-14: unknown host name: s	The DNS lookup, using gethostbyname() with supplied name, failed to resolve to an IP address.	Verify the host name.
CoreApi-9571-15: unknown IPv4 name: s	The DNS lookup, using gethostbyname() with supplied name, failed to resolve to an IPv4 address.	Verify the name refers to an IPv4 address.
CoreApi-9571-21: BrokerIP↩ :RemotePort is malformed	The broker specification string format is as follows: [Interface[↩ :LocalPort]->]BrokerIP:Remote↩ Port where Interface and LocalPort refer the local host interface and port, the BrokerIP refers to the broker's IP address, and the RemotePort refers to the broker's UDP port.	Provide a valid broker specification.
CoreApi-9571-22: DaemonIP↩ :RemotePort is malformed	The unicast resolver daemon specification string format is as follows: [Interface[:LocalPort]->]Daemon↩ IP:RemotePort where Interface and LocalPort refer the local host interface and port, the DaemonIP refers to the resolver daemon's IP address, and the RemotePort refers to the resolver daemon's UDP port.	Provide a valid resolver daemon specification.
CoreApi-9605-1: Brokered Context does not support security/compression	A context can not be a Security and/or Compression and Brokered context concurrently.	Configure context either as Secure and/or Compression or Brokered context, but not both. Turning on security/compression won't secure/compress connections to broker.
CoreApi-9650-01: optlen incorrect size	The size of the optval given does not match the size of this option type.	Provide an optval of the appropriate size for this option type.
CoreApi-9650-02: unrecognized compression algorithm not supported	Option was set to an unsupported value.	Check configuration and UM version for support of the value configured.
CoreApi-9650-03: optval not understood	Option was set to an unsupported value.	Check configuration and UM version for support of the value configured.
CoreApi-9650-04: optlen incorrect size	The size of the optval given does not match the size of this option type.	Provide an optval of the appropriate size for this option type.
CoreApi-9650-05: optlen too small	The provided buffer is too small to hold the option value.	Provide a larger buffer.
CoreApi-9666-01: optlen incorrect size	The size of the optval given does not match the size of this option type.	Provide an optval of the appropriate size for this option type.
CoreApi-9666-02: optval not numeric	This option is a numeric type, but a non-numeric string was given in optval.	Check configuration options for typos.
CoreApi-9666-03: optval not a number	This option is a numeric type, but a non-numeric string was given in optval.	Check configuration options for typos.

CoreApi-9666-04: optlen incorrect size	The size of the optval given does not match the size of this option type.	Provide an optval of the appropriate size for this option type.
CoreApi-9666-05: optlen too small	The provided buffer is too small to hold the option value.	Provide a larger buffer.
CoreApi-9720-01: Sending multicast immediate message on a Security/Compression Context is not allowed.	A context configured for security and/or compression is not allowed to use multicast.	The user could create multiple contexts and selectively configure them as security and/or compression
CoreApi-9720-02: Sending multicast immediate message on a Security/Compression Context is not allowed.	A context configured for security and/or compression is not allowed to use multicast.	Configuration error with DRO's.
CoreApi-9720-03: Sending multicast immediate request on a Security/Compression Context is not allowed.	A context configured for security and/or compression is not allowed to use multicast.	The user could create multiple contexts and selectively configure them as security and/or compression
CoreApi-9721-10: Source [p] UME is not supported with the LBM_M↩SG_BUFF_ALLOC flag.	A call to lbm_src_alloc_msg_buff was passed a UME source.	UME sources are not supported at this time.
CoreApi-9721-1: src cannot be N↩ULL	A call to lbm_src_alloc_msg_buff was passed a NULL src.	Specify a valid LBTRM src. Only LBTRM sources are supported at this time.
CoreApi-9721-2: usr_bufp cannot be NULL	A call to lbm_src_alloc_msg_buff was passed a NULL usr_bufp.	Pass a valid pointer that will contain the pointer to be used to fill in the caller's message data.
CoreApi-9721-3: lbm_hdl cannot be NULL	A call to lbm_src_alloc_msg_buff was passed a NULL lbm_hdl.	Pass a valid pointer that will contain the pointer to the returned lbm_↩hdl. This is what will be passed to a subsequent **lbm_src_send()** call.
CoreApi-9721-4: transport for src must be LBTRM.	A call to lbm_src_alloc_msg_buff was passed a non LBTRM src.	Specify a valid LBTRM src. Only LBTRM sources are supported at this time.
CoreApi-9721-5: length (d) too long, must be less than d.	A call to lbm_src_alloc_msg_buff was passed a length that would cause fragmentation of a message.	Specify a length less than the maximum length shown in the message.
CoreApi-9721-6: Passed buffer invalid, sqn [d] invalid	The message buffer supplied to a source send call with the LBM_↩MSG_BUFF_ALLOC flag set, does not contain valid identifiers.	Check to make sure that the supplied message buffer was allocated with a call to **lbm_src_alloc_↩msg_buff()** and is the handle to the buffer and not the actual message data pointer. See the documentation for the **lbm_src_alloc_msg↩_buff()** call.
CoreApi-9721-7: Passed buffer invalid, tidx [d] invalid	The message buffer supplied to a source send call with the LBM_↩MSG_BUFF_ALLOC flag set, does not contain valid identifiers.	Check to make sure that the supplied message buffer was allocated with a call to **lbm_src_alloc_↩msg_buff()** and is the handle to the buffer and not the actual message data pointer. See the documentation for the **lbm_src_alloc_msg↩_buff()** call.

CoreApi-9721-8: Source [p] type [u] is not LBTRM. LBTRM is required with the LBM_MSG_BUF↩F_ALLOC flag.	The source supplied to a source send call with the LBM_MSG_BU↩FF_ALLOC flag set was not an L↩BTRM source.	At this time, only LBTRM sources are supported when using the LB↩M_MSG_BUFF_ALLOC flag. Use only LBTRM sources when specifying the LBM_MSG_BUFF_ALL↩OC flag.
CoreApi-9721-9: Source [p] UM↩Q/ULB is not supported with the L↩BM_MSG_BUFF_ALLOC flag.	A call to lbm_src_alloc_msg_buff was passed a UMQ (or ULB) source.	UMQ sources are not supported at this time.
CoreApi-9722-1: UMQ functionality requested but the library does not support UMQ.	The option umq_queue_↩participation is only included in the UM Queuing edition. An attempt to enable this option was made with either the UM Streaming edition or UM Persistence edition library.	If queuing is not required in the application, then modify either the configuration file that sets this option, or modify the code that is programmatically attempting to set this option.
CoreApi-9722-2: UMQ functionality requested but the library does not support UMQ.	The option umq_queue_↩participation is only included in the UM Queuing edition. An attempt to enable this option was made with either the UM Streaming edition or UM Persistence edition library.	If queuing is not required in the application, then modify either the configuration file that sets this option, or modify the code that is programmatically attempting to set this option.
CoreApi-9722-3: UMP functionality requested but the library does not support UMP.	The option ume_use_store is only included in the UM Persistence edition. An attempt to enable this option was made with the UM Streaming edition library.	If persistence is not required in the application, then modify either the configuration file that sets this option, or modify the code that is programmatically attempting to set this option.
CoreApi-9722-4: UMP functionality requested but the library does not support UMP.	The option ume_use_store is only included in the UM Persistence edition. An attempt to enable this option was made with the UM Streaming edition library.	If persistence is not required in the application, then modify either the configuration file that sets this option, or modify the code that is programmatically attempting to set this option.
CoreApi-9727-01: Compression is not supported with source transports other than LBT-TCP	Compression is not supported on any transport other than LBT-TCP.	The user needs to check their configuration
CoreApi-9728-01: Context configured to use TLS, but TLS is not available.	Creating the TLS context failed, but the user configured the LBM context to use TLS.	Check OpenSSL library version. Contact Informatica support.
CoreApi-9728-02: Context configured to use TLS, but TLS is not available.	Creating the TLS context failed, but the user configured the LBM context to use TLS.	Check OpenSSL library version. Contact Informatica support.
CoreApi-9743-01: optlen incorrect size	The size of the optlen given does not match the size of this option type.	Provide an optlen the size of a lbm_ulong_t.
CoreApi-9743-02: invalid proactive keepalive interval setting	Invalid setting for the proactive keepalive interval	Valid settings are >= 1500 (the effective minimum), or 0 to disable keepalive
CoreApi-9743-03: optval not numeric	This option is a numeric type, but a non-numeric string was given in optval.	Check configuration options for typos.
CoreApi-9743-04: optval not a number	This option is a numeric type, but a non-numeric string was given in optval.	Check configuration options for typos.

CoreApi-9743-05: invalid proactive keepalive interval setting	Invalid setting for the proactive keepalive interval	Valid settings are >= 1500 (the effective minimum), or 0 to disable keepalive
CoreApi-9743-06: optlen incorrect size	The size of the optlen given does not match the size of this option type.	Provide an optlen of the appropriate size for this option type.
CoreApi-9743-07: optlen too small	The provided buffer is too small to hold the option value.	Provide a larger buffer.
CoreApi-9778-100: value must be "off", "on" or "convert" for monitor format option "passthrough".	Invalid value for passthrough	value must be "off" or "on"
CoreApi-9779-1: optlen incorrect size	Checks whether optlen is an appropriate size and returns to caller if opten is an incorrect size.	Set the optlen value to the size of lbm_ulong_t
CoreApi-9779-2: optval not numeric	Checks whether optval points to a numeric value and returns to caller if optval points to a non numeric value.	Setup optval to a numeric value.
CoreApi-9779-3: optval not a number	Checks whether optval points to a numeric value and returns to caller if optval points to a non numeric value.	Setup optval to a numeric value.
CoreApi-9779-4: optlen incorrect size	Checks whether optlen is an appropriate size and returns to caller if optlen size is incorrect.	Set the optlen value to the size of lbm_ulong_t
CoreApi-9779-5: optlen too small	Checks whether optlen is an appropriate size and returns to caller if optlen size is incorrect.	Set the optlen value to the size of lbm_ulong_t
CoreApi-9798-10: optlen too small	Checks whether optlen is an appropriate size and returns to caller if optlen size is incorrect.	Set the optlen value to the size of lbm_ulong_t
CoreApi-9798-1: optlen incorrect size	Checks whether optlen is an appropriate size and returns to caller if opten is an incorrect size.	Set the optlen value to the size of lbm_ulong_t
CoreApi-9798-2: optval not numeric	Checks whether optval points to a numeric value and returns to caller if optval points to a non numeric value.	Setup optval to a numeric value.
CoreApi-9798-3: optval not a number	Checks whether optval points to a numeric value and returns to caller if optval points to a non numeric value.	Setup optval to a numeric value.
CoreApi-9798-4: optlen incorrect size	Checks whether optlen is an appropriate size and returns to caller if optlen size is incorrect.	Set the optlen value to the size of lbm_ulong_t
CoreApi-9798-5: optlen too small	Checks whether optlen is an appropriate size and returns to caller if optlen size is incorrect.	Set the optlen value to the size of lbm_ulong_t
CoreApi-9798-6: optlen incorrect size	Checks whether optlen is an appropriate size and returns to caller if opten is an incorrect size.	Set the optlen value to the size of lbm_ulong_t
CoreApi-9798-7: optval not numeric	Checks whether optval points to a numeric value and returns to caller if optval points to a non numeric value.	Setup optval to a numeric value.

CoreApi-9798-8: optval not a number	Checks whether optval points to a numeric value and returns to caller if optval points to a non numeric value.	Setup optval to a numeric value.
CoreApi-9798-9: optlen incorrect size	Checks whether optlen is an appropriate size and returns to caller if optlen size is incorrect.	Set the optlen value to the size of lbm_ulong_t
CoreApi-9890-01: optlen for transport_lbtipc_pend_behavior_↩ linger_loop_count incorrect size	The correct size when setting the transport_lbtipc_pend_behavior_↩ linger_loop_count option is sizeof lbm_ulong_t	Make sure the correct size is allocated
CoreApi-9890-02: optval for transport_lbtipc_pend_behavior_↩ linger_loop_count not numeric	The string for transport_lbtipc_↩ pend_behavior_linger_loop_count is not a numeric	Make sure a numeric value is passed in the string
CoreApi-9890-03: optval for transport_lbtipc_pend_behavior_↩ linger_loop_count not a number	The string for transport_lbtipc_↩ pend_behavior_linger_loop_count is not a number	Make sure a number value is passed in the string
CoreApi-9890-04: optlen for transport_lbtipc_pend_behavior_↩ linger_loop_count incorrect size	The correct size when getting the transport_lbtipc_pend_behavior_↩ linger_loop_count option is sizeof lbm_ulong_t	Make sure the correct size is allocated
CoreApi-9890-05: optlen for transport_lbtipc_pend_behavior↩ _linger_loop_count string too small	The correct size when getting the string value for the transport_↩ lbtipc_pend_behavior_linger_↩ loop_count is LBM_MIN_SGET_↩ OPTLEN	Make sure the correct string size is allocated
CoreApi-9901-01: target SOURCE type: transport found but return address is not available (s)	An attempt to Unicast a message or request using a SOURCE that does not contain the return address.	This is likely a result of using an older version of LBM at the source which does not necessarily include the return address.
CoreApi-9901-02: target SOURCE type: transport not found (s)	An attempt to Unicast a message or request using a SOURCE string that is not found in the Topic Cache.	The customer should check the source string and possibly manage EOS.
CoreApi-9901-03: target malformed (SOURCE type not valid (s))	An attempt to Unicast a messaging or request using a SOURCE string that is not valid.	The customer should check the source string.
CoreApi-9901-04: target SOURCE type: transport found but return address is not available (s)	An attempt to Unicast a message or request using a SOURCE that does not contain the return address.	This is likely a result of using an older version of LBM at the source which does not necessarily include the return address.
CoreApi-9922-01: lbm_flush_all ctx cannot be NULL	User passed NULL for the context parameter. NULL is not a valid context.	The user needs to check their implementation.
CoreApi-9923-01: optlen incorrect size	The option receive_batch_↩ notification_function setopt size must be sizeof lbm_rcv_batch_↩ notify_func_t	Use the correct size for the option receive_batch_notification_↩ function
CoreApi-9923-02: receive batch notification start function must be valid	The option receive_batch_↩ notification_function setopt must have a valid start function callback defined	Define the start function for option receive_batch_notification_↩ function
CoreApi-9923-03: receive batch notification end function must be valid	The option receive_batch_↩ notification_function setopt must have a valid end function callback defined	Define the end function for option receive_batch_notification_↩ function

CoreApi-9923-04: str_setopt not supported for option	str_setopt on receive_batch_↩ notification_function not supported	the customer needs to use the non-string setopt function
CoreApi-9923-05: optlen incorrect size	The option receive_batch_↩ notification_function getopt size must be sizeof lbm_rcv_batch_↩ notify_func_t	Use the correct size for the option receive_batch_notification_↩ function
CoreApi-9923-06: str_getopt not supported for option	str_getopt on receive_batch_↩ notification_function not supported	the customer needs to use the non-string getopt function
CoreApi-9938-1: optlen incorrect size	Attempted to set option compatibility_pre_um_6_0_↩ context_ad_ivl with an incorrect optlen size.	Optlen must be size of unsigned long.
CoreApi-9938-2: invalid pre60 context ad interval setting	Attempted to set option compatibility_pre_um_6_0_↩ context_ad_ivl to an invalid value.	Option must be set to 0 or a value $>$ 500 milliseconds.
CoreApi-9938-3: optval not numeric	Attempted to set option compatibility_pre_um_6_0_↩ context_ad_ivl with an invalid optval	Optval must be numeric.
CoreApi-9938-4: optval not a number	Attempted to set option compatibility_pre_um_6_0_↩ context_ad_ivl with an invalid optval	Optval must be numeric.
CoreApi-9938-5: optlen incorrect size	Attempted to retrieve option compatibility_pre_um_6_0_↩ context_ad_ivl with an incorrect optlen size.	Optlen must be size of unsigned long.
CoreApi-9938-6: optlen too small	Attempted to set option compatibility_pre_um_6_0_↩ context_ad_ivl with an incorrect optlen size.	Optlen must be greater than LBM↩ _MIN_SGET_OPTLEN.
CoreApi-9941-115: usr_bufp offset is not valid.	A smart source call specified a user buffer with an invalid offset.	Supply the exact pointer supplied by **lbm_ssrc_buff_get()**.
CoreApi-9941-116: usr_bufp base address is not valid.	A smart source call specified a user buffer with an invalid base address.	Return buffer with the exact pointer supplied by **lbm_ssrc_buff_get()**.
CoreApi-9941-117: user buffer is on the free list.	A smart source call specified a user buffer that is on the free list.	Invoke **lbm_ssrc_buff_get()** to allocate a user buffer.
CoreApi-9941-118: corrupted user buffer pointer structure	A smart source call specified what appears to be a corrupted user buffer pointer structure.	Ensure that writes using the user buffer pointer do not exceed the range of addresses bounded by the source scoped smart_src_max_↩ message_length configuration option.
CoreApi-9941-11: optlen incorrect size	smart_src_user_buffer_count value contained an incorrect length	smart_src_user_buffer_count should be of sizeof(int)
CoreApi-9941-12: optval must be greater than 0	smart_src_user_buffer_count did not contain a positive integer	smart_src_user_buffer_count must be a positive integer
CoreApi-9941-13: optval too large	smart_src_user_buffer_count is larger than the maximum allowed size	Decrease the size of smart_src_↩ user_buffer_count
CoreApi-9941-14: optval not numeric	smart_src_user_buffer_count value is not numeric	smart_src_user_buffer_count must be a numeric value
CoreApi-9941-15: optval must be greater than 0	smart_src_user_buffer_count did not contain a positive integer	smart_src_user_buffer_count must be a positive integer

CoreApi-9941-16: optval too large	smart_src_user_buffer_count is larger than the maximum allowed size	Decrease the size of smart_src_↩ user_buffer_count
CoreApi-9941-17: optlen incorrect size	The size of the option was too large or too small	smart_src_user_buffer_count must be sizeof(int)
CoreApi-9941-18: optlen too small	The size of the option buffer was too small to contain the option	smart_src_user_buffer_count optlen must be at least 80
CoreApi-9941-1: optlen incorrect size	smart_src_max_message_length value contained an incorrect length	smart_src_max_message_length should be of sizeof(int)
CoreApi-9941-21: optlen incorrect size	smart_src_retention_buffer_count value contained an incorrect length	smart_src_retention_buffer_count should be of sizeof(int)
CoreApi-9941-22: optval must be greater than 0	smart_src_retention_buffer_count did not contain a positive integer	smart_src_retention_buffer_count must be a positive integer
CoreApi-9941-23: optval too large	smart_src_retention_buffer_count is larger than the maximum allowed size	Decrease the size of smart_src_↩ retention_buffer_count
CoreApi-9941-24: optval not numeric	smart_src_retention_buffer_count value was not numeric	smart_src_retention_buffer_count must be a numeric value
CoreApi-9941-25: optval must be greater than 0	smart_src_retention_buffer_count did not contain a positive integer	smart_src_retention_buffer_count must be a positive integer
CoreApi-9941-26: optval too large	smart_src_retention_buffer_count is larger than the maximum allowed size	Decrease the size of smart_src_↩ retention_buffer_count
CoreApi-9941-27: optlen incorrect size	The size of the option was too large or too small	smart_src_retention_buffer_count is sizeof(int)
CoreApi-9941-28: optlen too small	The size of the option buffer was too small to contain the option	smart_src_retention_buffer_count optlen must be at least 80
CoreApi-9941-2900: Smart Source not supported on this platform	Smart Source is not supported on this platform	Smart Source is supported on 64-bit Linux and Windows platforms
CoreApi-9941-2980: ssrcp must be valid	ssrcp parameter was NULL	ssrcp must be a valid pointer
CoreApi-9941-2981: ctx must be valid	ctx parameter was NULL	ctx must be a pointer to a valid context
CoreApi-9941-2982: topic must be valid	topic parameter was NULL	topic must be a pointer to a valid topic
CoreApi-9941-2983: ctx is reactor only	The context passed as a parameter is a reactor context used for retrieving statistics for a monitoring source controller.	Do not create an lbm smart source on a reactor context.
CoreApi-9941-2984: topic passed to lbm_ssrc_create was not created on the same context	topic parameter was not created on the same context as the ctx parameter	topic parameter must have been created on the context in the ctx parameter
CoreApi-9941-2985: topic already associated with a source	The application attempted to create a smart source on a topic that is already associated with a source.	Delete the associated source and try again.
CoreApi-9941-2988: transport type unknown	The context is associated with an unknown transport type.	Contact support.
CoreApi-9941-2989: ssrc must be valid	ssrc parameter was NULL	ssrc must be a pointer to a valid lbm smart source.
CoreApi-9941-2996: ssrc must be valid	The ssrc parameter supplied to a smart source send call was NULL.	ssrc must be a pointer to a valid lbm smart source.
CoreApi-9941-2997: usr_bufp must be valid	The usr_bufp parameter supplied to a smart source send call was N↩ ULL.	usr_bufp must be a pointer to a valid user buffer.
CoreApi-9941-2: optval must be greater than 16	smart_src_max_message_length did not contain a positive integer	smart_src_max_message_length must be greater than 16

CoreApi-9941-3000: **lbm_ssrc_↩ send_ex()** thread does not match thread used by other smart source sends on this transport session	The smart source send call thread does not match the thread used by other smart source sends on this transport session.	The smart source send call thread must be the same thread used by all smart source sends on this transport session.
CoreApi-9941-3001: **lbm_ssrc_↩ send_ex()** thread does not match thread used by other smart source sends on this transport session	The smart source send call thread does not match the thread used by other smart source sends on this transport session.	The smart source send call thread must be the same thread used by all smart source sends on this transport session.
CoreApi-9941-3025: ssrc must be valid	The Smart Source object is not valid.	Provide a valid Smart Source object.
CoreApi-9941-3026: stats must be valid	The transport statistics object is not valid.	Provide a valid object.
CoreApi-9941-3027: ssrc must be valid	The Smart Source object is not valid.	Provide a valid Smart Source object.
CoreApi-9941-31: optlen incorrect size	transport_lbtrm_smart_src_↩ transmission_window_buffer_↩ count value contained an incorrect length	transport_lbtrm_smart_src_↩ transmission_window_buffer_↩ count should be of sizeof(int)
CoreApi-9941-32: optval must be greater than 0	transport_lbtrm_smart_src_↩ transmission_window_buffer_↩ count did not contain a positive integer	transport_lbtrm_smart_src_↩ transmission_window_buffer_↩ count must be a positive integer
CoreApi-9941-33: optval too large	transport_lbtrm_smart_src_↩ transmission_window_buffer_↩ count is larger than the maximum allowed size	Decrease the size of transport_↩ lbtrm_smart_src_transmission_↩ window_buffer_count
CoreApi-9941-34: optval not numeric	transport_lbtrm_smart_src_↩ transmission_window_buffer_↩ count value was not numeric	transport_lbtrm_smart_src_↩ transmission_window_buffer_↩ count must be a numeric value
CoreApi-9941-35: optval must be greater than 0	transport_lbtrm_smart_src_↩ transmission_window_buffer_↩ count did not contain a positive integer	transport_lbtrm_smart_src_↩ transmission_window_buffer_↩ count must be a positive integer
CoreApi-9941-36: optval too large	transport_lbtrm_smart_src_↩ transmission_window_buffer_↩ count is larger than the maximum allowed size	Decrease the size of transport_↩ lbtrm_smart_src_transmission_↩ window_buffer_count
CoreApi-9941-37: optlen incorrect size	The size of the option was too large or too small	transport_lbtrm_smart_src_↩ transmission_window_buffer_↩ count must be sizeof(int)
CoreApi-9941-38: optlen too small	The size of the option buffer was too small to contain the option	transport_lbtrm_smart_src_↩ transmission_window_buffer_↩ count optlen must be at least 80
CoreApi-9941-3996: ssrc must be valid	ssrc parameter was NULL	ssrc must be a pointer to a valid lbm smart source.
CoreApi-9941-3997: usr_bufp must be valid	usr_bufp parameter was NULL	usr_bufp must be a valid pointer
CoreApi-9941-3999: Smart Source [p] does not support UMQ/ULB at this time.	A call to lbm_ssrc_buff_get was passed a UMQ (or ULB) source.	UMQ sources are not supported at this time.
CoreApi-9941-3: optval too large	smart_src_max_message_length is larger than the maximum allowed size	Decrease the size of smart_src_↩ max_message_length

CoreApi-9941-4001: All d Smart Source [p] user buffers have been allocated.	A call to lbm_ssrc_buff_get failed due to user buffer exhaustion.	Return unused user buffers via **lbm_ssrc_buff_put()** or restart the application with a larger user buffer count.
CoreApi-9941-4020: ssrc must be valid	ssrc parameter was NULL	ssrc must be a pointer to a valid lbm smart source.
CoreApi-9941-4021: usr_bufp must be valid	usr_bufp parameter was NULL	usr_bufp must be a pointer to a valid user buffer.
CoreApi-9941-4022: usr_bufp offset is not valid.	A call to lbm_ssrc_buff_put specified a user buffer with an invalid offset.	Return buffer with the exact pointer supplied by **lbm_ssrc_buff_get()**.
CoreApi-9941-4023: usr_bufp base address is not valid.	A call to lbm_ssrc_buff_put specified a user buffer with an invalid base address.	Return buffer with the exact pointer supplied by **lbm_ssrc_buff_get()**.
CoreApi-9941-4024: user buffer is already on the free list.	A call to lbm_ssrc_buff_put specified a user buffer the is already on the free list.	A buffer can only be returned once.
CoreApi-9941-4: optval not numeric	smart_src_max_message_length value is not numeric	smart_src_max_message_length must be a numeric value
CoreApi-9941-5551: Smart source can not be configured as broker source	An lbm smart source can not be configured as broker.	Do not configure lbm smart source as Broker.
CoreApi-9941-5552: Smart source can not be configured as ulb source	An lbm smart source can not be configured as ulb source.	Do not configure lbm smart source as ULB.
CoreApi-9941-5554: Smart source can not be configured to be pre-6.0 compatible	An lbm smart source can not be configured to be pre-6.0 compatible.	Do not configure lbm smart source to inter-operate with pre-6.0 applications.
CoreApi-9941-5555: Smart source cannot be configured for TCP transport	An lbm smart source can not be configured for TCP transport.	Smart source can only be configured with a LBT-RM transport.
CoreApi-9941-5557: Smart source can not be configured for LBT-IPC transport	An lbm smart source can not be configured for LBT-IPC transport.	Smart source can only be configured with a LBT-RM transport.
CoreApi-9941-5558: Smart source can not be configured for LBT-SMX transport	An lbm smart source can not be configured for LBT-SMX transport.	Smart source can only be configured with a LBT-RM transport.
CoreApi-9941-5559: Smart source can not be configured for LBT-RD↩MA transport	An lbm smart source can not be configured for LBT-RDMA transport.	Smart source can only be configured with a LBT-RM transport.
CoreApi-9941-5560: Smart source can not be configured as Broker	An lbm smart source can not be configured as Broker.	Smart source can only be configured with a LBT-RM transport.
CoreApi-9941-5565: Smart source may not use the same transport as a standard source	An lbm smart source may not reside with a standard source on the same transport.	Configure the smart source on an LBT-RM transport that only contains smart sources.
CoreApi-9941-5566: smart_src↩_max_message_length exceeds the configured maximum message length for this transport session.	The first Smart Source to create a transport session establishes the maximum message length for all subsequent Smart Sources on that transport.	Decrease the size of smart_↩src_max_message_length for this Smart Source or increase the size of smart_src_max_message↩_length for the first Smart Source created on this transport session.
CoreApi-9941-5571: Could not allocate lu bytes. The memory needed for smart_src_user↩_buffer_count exceeds available memory on your system.	The memory needed for smart↩_src_user_buffer_count is more memory than is available on your system.	Decrease the size of smart_src_↩user_buffer_count.

CoreApi-9941-5572: Could not allocate lu bytes. The product of smart_src_user_buffer_count and smart_src_max_message_length exceeds available memory on your system.	The product of smart_src_user_↩ buffer_count and smart_src_max↩ _message_length specifies more memory than is available on your system.	Decrease the size of smart_↩ src_user_buffer_count and/or the smart_src_max_message_length.
CoreApi-9941-5573: Could not allocate lu bytes. The product of smart_src_retention_buffer_count and smart_src_max_message_↩ length exceeds available memory on your system.	The product of smart_src↩ _retention_buffer_count and smart_src_max_message_length specifies more memory than is available on your system.	Decrease the size of smart_src↩ _retention_buffer_count and/or the smart_src_max_message_length.
CoreApi-9941-5574: Could not allocate lu bytes. The product of transport_lbtrm_smart_src↩ _transmission_window_buffer↩ _count and smart_src_max_↩ message_length exceeds available memory on your system.	The product of transport_lbtrm_↩ smart_src_transmission_window↩ _buffer_count and smart_src_↩ max_message_length specifies more memory than is available on your system.	Decrease the size of transport↩ _lbtrm_smart_src_transmission↩ _window_buffer_count and/or the smart_src_max_message_length.
CoreApi-9941-5575: Smart source may not use the same transport as a standard source	An lbm standard source may not reside with a smart source on the same transport.	Configure the standard source on an LBT-RM transport that only contains standard sources.
CoreApi-9941-5: optval must be greater than 16	smart_src_max_message_length did not contain a positive integer	smart_src_max_message_length must be greater than 16
CoreApi-9941-6000: Can't allocate config options of u bytes [s:d]	The system was not able to allocate the amount of memory requested.	The physical memory on the machine may be over committed; try moving some applications to another machine.
CoreApi-9941-6001: Failed to call dump [s:d]	The call to **lbm_ssrc_topic_↩ dump()** failed.	Check that ssrc and opts are valid and that the value at size is greater than 0.
CoreApi-9941-6003: Can't allocate JNI source object of u bytes [s:d]	The system was not able to allocate the amount of memory requested.	The physical memory on the machine may be over committed; try moving some applications to another machine.
CoreApi-9941-6004: Can't allocate memory [s:d]	The system was not able to allocate the amount of memory requested.	The physical memory on the machine may be over committed; try moving some applications to another machine.
CoreApi-9941-6005: Can't allocate memory [s:d]	The system was not able to allocate the amount of memory requested.	The physical memory on the machine may be over committed; try moving some applications to another machine.
CoreApi-9941-6006: Can't allocate memory [s:d]	The system was not able to allocate the amount of memory requested.	The physical memory on the machine may be over committed; try moving some applications to another machine.
CoreApi-9941-6007: Can't get address of ByteBuffer [s:d] - may not be a direct ByteBuffer	The ByteBuffer was not valid for this SmartSource.	The ByteBuffer must be a buffer retrieved via the buffGet() method from this SmartSource.
CoreApi-9941-6008: Can't get address of ByteBuffer [s:d] - may not be a direct ByteBuffer	The ByteBuffer was not valid for this SmartSource.	The ByteBuffer must be a buffer retrieved via the buffGet() method from this SmartSource.
CoreApi-9941-6009: Can't allocate memory [s:d]	The system was not able to allocate the amount of memory requested.	The physical memory on the machine may be over committed; try moving some applications to another machine.

CoreApi-9941-6: optval too large	smart_src_max_message_length is larger than the maximum allowed size	Decrease the size of smart_src_↩max_message_length
CoreApi-9941-710: ssrc must be valid	The Smart Source object is not valid.	Provide a valid Smart Source object.
CoreApi-9941-711: topic must be valid	The topic associated with the Smart Source is not valid.	Provided a valid topic.
CoreApi-9941-7: optlen incorrect size	The size of the option was too large or too small	smart_src_max_message_length must be sizeof(int)
CoreApi-9941-8: optlen too small	The size of the option buffer was too small to contain the option	smart_src_max_message_length optlen must be at least 80
CoreApi-9954-01: datagram acceleration init function must be valid	The datagram acceleration option requires that all callbacks be populated with valid function pointers.	The user needs to pass the correct size to the option setter
CoreApi-9954-02: datagram acceleration open function must be valid	The datagram acceleration option requires that all callbacks be populated with valid function pointers.	The user needs to pass the correct size to the option setter
CoreApi-9954-03: datagram acceleration close function must be valid	The datagram acceleration option requires that all callbacks be populated with valid function pointers.	The user needs to pass the correct size to the option setter
CoreApi-9954-04: datagram acceleration bind function must be valid	The datagram acceleration option requires that all callbacks be populated with valid function pointers.	The user needs to pass the correct size to the option setter
CoreApi-9954-05: datagram acceleration unbind function must be valid	The datagram acceleration option requires that all callbacks be populated with valid function pointers.	The user needs to pass the correct size to the option setter
CoreApi-9954-06: datagram acceleration multicast join function must be valid	The datagram acceleration option requires that all callbacks be populated with valid function pointers.	The user needs to pass the correct size to the option setter
CoreApi-9954-07: datagram acceleration multicast leave function must be valid	The datagram acceleration option requires that all callbacks be populated with valid function pointers.	The user needs to pass the correct size to the option setter
CoreApi-9954-08: datagram acceleration recvfrom function must be valid	The datagram acceleration option requires that all callbacks be populated with valid function pointers.	The user needs to pass the correct size to the option setter
CoreApi-9954-09: datagram acceleration send connect function must be valid	The datagram acceleration option requires that all callbacks be populated with valid function pointers.	The user needs to pass the correct size to the option setter
CoreApi-9954-10: datagram acceleration send disconnect function must be valid	The datagram acceleration option requires that all callbacks be populated with valid function pointers.	The user needs to pass the correct size to the option setter
CoreApi-9954-11: datagram acceleration send function must be valid	The datagram acceleration option requires that all callbacks be populated with valid function pointers.	The user needs to pass the correct size to the option setter
CoreApi-9954-12: datagram acceleration sento function must be valid	The datagram acceleration option requires that all callbacks be populated with valid function pointers.	The user needs to pass the correct size to the option setter
CoreApi-9954-13: datagram acceleration get address function must be valid	The datagram acceleration option requires that all callbacks be populated with valid function pointers.	The user needs to pass the correct size to the option setter
CoreApi-9954-14: datagram acceleration optlen incorrect size	The datagram acceleration option length is expected to be the size of lbm_datagram_acceleration_↩func_t	The user needs to pass the correct size to the option setter

CoreApi-9954-15: str_setopt not supported for the datagram acceleration option	The datagram acceleration option does not support string set/get option functions.	The user needs to use the structure set/get option functions.
CoreApi-9954-16: datagram acceleration optlen incorrect size	The datagram acceleration option length is expected to be the size of lbm_datagram_acceleration_↩func_t	The user needs to pass the correct size to the option setter
CoreApi-9954-17: str_getopt not supported for the datagram acceleration option	The datagram acceleration option does not support string set/get option functions.	The user needs to use the structure set/get option functions.
CoreApi-9954-60: Datagram Acceleration not supported	The datagram acceleration option requires an LBM build that supports it.	Contact support to get the proper LBM build.
CoreApi-9954-61: Datagram Acceleration not supported	The datagram acceleration option requires an LBM build that supports it.	Contact support to get the proper LBM build.
CoreApi-9954-62: Datagram Acceleration not supported	The datagram acceleration option requires an LBM build that supports it.	Contact support to get the proper LBM build.
CoreApi-9954-63: Datagram Acceleration not supported	The datagram acceleration option requires an LBM build that supports it.	Contact support to get the proper LBM build.
CoreApi-9972-1: unsubscribe may only be performed on a subscribed channel.	The call to discontinue an existing channel subscription was invoked on an unsubscribed channel.	Ensure the channel has been subscribed before calling unsubscribe.
CoreApi-9972-2: unsubscribe may only be performed on a subscribed channel.	The call to discontinue an existing channel subscription was invoked on an unsubscribed channel.	Ensure the channel has been subscribed before calling unsubscribe.
CoreApi-9972-3: unsubscribe may only be performed on a subscribed channel.	The call to discontinue an existing channel subscription was invoked on an unsubscribed channel.	Ensure the channel has been subscribed before calling unsubscribe.
CoreApi-9972-4: unsubscribe may only be performed on a subscribed channel.	The call to discontinue an existing channel subscription was invoked on an unsubscribed channel.	Ensure the channel has been subscribed before calling unsubscribe.
CoreApi-9972-5: unsubscribe may only be performed on a subscribed channel.	The call to discontinue an existing channel subscription was invoked on an unsubscribed channel.	Ensure the channel has been subscribed before calling unsubscribe.

12.3 UM SRS Log Messages

SRS-10385-98: Registration protocolVersion[" + srs↩Registration.getProtocolVersion() + "] received for client[" + srs↩Registration.getIp() + ":" + srsRegistration.getPort() + "] sessionID[" + srsRegistration.get↩SessionId() + "]	A client srsRegistration request was received.	No resolution needed; Supplied for informational purposes only.

SRS-10385-99: TCP Disconnect received for client[" + srsRegistration.getIp() + ":" + srsRegistration.getPort() + "] sessionID[" + srsRegistration.get↩ SessionId() + "]	TCP Disconnect was received from a client.	No resolution needed; Supplied for informational purposes only.
SRS-10386-1002: Received srs↩ Registration request for clientID[" + clientId + "] with invalid message id[" + srsMessage.id + "]	A client attempted to register with an invalid request/response message ID.	Reconcile SRS protocol versions and try again.
SRS-10386-1003: Received an invalid stream request for clientID[" + clientId + "]	A client attempted to register with an invalid stream request message ID.	Reconcile SRS protocol versions and try again.
SRS-10386-1004: SRSSubscriber will not update monitor info because SRSRegistration is null	The srsRegistration associated with an SRS subscriber could not be found. Consequently, associated monitored information can not be provided.	No resolution required. If this happens frequently, contact Informatica support.
SRS-10386-1005: Received invalid SRS message for clientID[" + clientId + "] with message id:	The SRS received an invalid SRS message.	Contact Informatica support.
SRS-10386-1014: Received SourceDeleteRecord for clientID[" + clientId + "] with invalid OTID[" + otidString + "]	The SRS received an invalid SDR.	Contact Informatica support.
SRS-10386-10: Debugging enabled; file path: [" + debugState.↩ getDebugFilePath() + "] mask: [" + String.format("0x%08X", debug↩ State.getDebugMask()) + "]	The debugger is enabled.	This is for informational purposes only and can be ignored.
SRS-10386-1300: Failed to initialize SRS application:	The SRS application failed to initialize.	Contact Informatica support.
SRS-10386-1301: Failed to load properties file " + APPLICATION↩ _PROPERTIES_FILE_NAME + ". Reason:	The SRS application properties file could not be found.	Contact Informatica support.
SRS-10386-1302: Failed to process SRS default configuration file. Reason:	The SRS application default configuration XML file could not be processed.	Contact Informatica support.
SRS-10386-1303: Failed to process SRS user configuration X↩ ML file " + configFilename.get↩ AbsolutePath() + ". Reason:	The SRS application user configuration XML file could not be processed.	The file may be missing, have inappropriate access privileges, or an error in the config file itself.
SRS-10386-1304: Failed to configure logback:	An internal error was encountered. The server was unable to configure the logger.	Contact Informatica support.
SRS-10386-1305: Unable to write pid file:	The SRS was unable to write the Processes ID file.	Check the Process ID path and directory access privileges.
SRS-10386-1306: The configuration file must be specified with -v option	The configuration file must be specified with -v option.	Specify the configuration file and try again.
SRS-10386-1307: Could not create LBM context [" + ex.get↩ Message() + "]	The SRS was unable to create the LBM context used for monitoring. Daemon monitoring will be disabled.	Contact Informatica support.

SRS-10386-1310: Configuration warning: environment variable L↩ BM_DEBUG_MASK must be a valid number between 0 and 0x↩ FFFFFFFF; debugging disabled	An internal error was encountered. The server was unable to set the LBM debug mask.	Contact Informatica support.
SRS-10386-1311: Error setting L↩ BM license:	An internal error was encountered. The server was unable to set the LBM license.	Contact Informatica support.
SRS-10386-1312: Exception instantiating LBM object:	An internal error was encountered. The server failed to instantiate LBM due to run time exception.	Contact Informatica support.
SRS-10386-1320: The running server attempted to restart	An internal ambiguity was encountered. The running server attempted to restart.	Contact Informatica support.
SRS-10386-1321: Attempt to start TCP Server failed; Server IP address[" + host + "] port[" + port + "] failed:	The SRS TCP server failed to start due to an exception identified in the log message.	Contact Informatica support.
SRS-10386-1322: The server failed to start	An internal error was encountered. The server failed to start.	Contact Informatica support.
SRS-10386-1400: Failed to instantiate LBMSource. Reason:	An internal error was encountered.	Contact Informatica support.
SRS-10386-1401: Failed to add immediate message receiver to " + "LBMContext. Reason:	An internal error was encountered.	Contact Informatica support.
SRS-10386-1402: MonitorInfo: getUMClientMonitorInfoMessage: Failed to cast value to Monitor↩ InfoConfigOption " + "for config option " + configOptionName + " in category " + monitorInfo↩ Category.getName() + ". Reason:	An internal error was encountered.	Contact Informatica support.
SRS-10386-1403: Daemon monitor sending monitor info messages on topic:	Successfully instantiated an LBM source to send monitor info messages.	No resolution needed; Supplied for informational purposes only.
SRS-10386-1404: Debug monitor listening for monitor info requests on IP address: " + config.get↩ DebugMonitorHost() + " port:	The SRS debug monitor is open for monitor info requests.	No resolution needed; Supplied for informational purposes only.
SRS-10386-1405: Daemon monitor listening for command requests on IP address: " + requestTcp↩ Interface + " port:	The SRS command messages channel is open for remote snapshot or config changes requets (or both).	No resolution needed; Supplied for informational purposes only.
SRS-10386-7: Connection to client lost:	A connection to a registered LBM client was lost perhaps due to network interruption or client failure.	Check that the network is stable. Contact Informatica support if this message occurs frequently.
SRS-10563-10: Received a SourceDeleteRecord without having first received a Source↩ InfoRecord	An unexpected internal state was encountered, but was handled.	No resolution required. If this happens frequently, contact Informatica support.
SRS-10563-11: Received a SourceDeleteRecord without having first received a Source↩ InfoRecord	An unexpected internal state was encountered, but was handled.	No resolution required. If this happens frequently, contact Informatica support.

SRS-10563-12: Received duplicate SourceInformationRecord for topic[" + siRec.getComparison↩ Symbol() + "] source[" + siRec.↩ getComparisonSource() + "] OT↩ ID[" + siRec.getDisplayOTID() + "]	Anrare internal state was encountered, but was handled. This state typically results from DROs briefly having more than one proxy source for a given originating source, usually due to a re-routing operation. This state normally resolves itself after a short time.	No resolution required. If this happens frequently, contact Informatica support.
SRS-10563-14: Got an unexpected message: {}	An unexpected internal state was encountered, but was handled.	No resolution required. If this happens frequently, contact Informatica support.
SRS-10563-15: attempting to set the ping interval for {} above the maximum of {}. Setting to the maximum	An attempt was made to configure ping-interval, which should typically not be modified by users except under direction and supervision of Informatica Support.	Remove the ping-interval configuration, or contact Informatica support.
SRS-10563-16: attempting to set the ping interval for {} below the minimum of {}. Setting to the minimum	An attempt was made to configure ping-interval, which should typically not be modified by users except under direction and supervision of Informatica Support.	Remove the ping-interval configuration, or contact Informatica support.
SRS-10563-17: attempted to monitor actor with duplicate name: {}	An internal error was encountered.	Contact Informatica support.
SRS-10563-18: MonitoredActor↩ TrackerActor: handleGetMonitor↩ Info: failed to process monitor info. " + "Reason:	An unexpected internal state was encountered, but was handled.	No resolution required. If this happens frequently, contact Informatica support.
SRS-10563-19: Received unexpected immediate LBM message↩ : " + lbmMessage.type() + " from client:	The SRS was sent a unicast immediate message that it does not recognize. This might happen because a client is using a newer version of UM than this SRS. There are also some unlikely scenarios related to a non-SRS process exiting and the SRS starting and using the same TCP port; a different UM program may be sending messages intended for the old exited process.	Ensure the SRS is from the same or newer version of UM as its clients. Ensure that that the SRS is given a unique port.
SRS-10563-20: Failed to send command message response: " + responseMessage + ". Reason:	An unexpected internal state was encountered, but was handled.	No resolution required. If this happens frequently, contact Informatica support.
SRS-10563-21: Control message error: " + "failed to deserialize command message from JSON. Reason:	An internal error was encountered.	Contact Informatica support.
SRS-10563-2: Unknown LBM log level: " + logLevel + " for log message:	An internal error (unknown LBM log level) was encountered.	Contact Informatica support.
SRS-10563-31: Failed to serialize a MonitorInfoMessage from category " + monitorInfoMessage.get↩ MonitorInfoCategory().getName() + ". Reason:	An internal error was encountered.	Contact Informatica support.
SRS-10563-32: Failed to send a MonitorInfoMessage. Reason:	An internal error was encountered.	Contact Informatica support.

SRS-10563-3: SRSClient↩ ManagerImpl: handleClientActor↩ Terminated: Received a Client↩ ActorTerminated message with null client actor SRS registration	An internal error was encountered.	Contact Informatica support.
SRS-10563-40: Failed to close L↩ BMSource. Reason:	An internal error was encountered.	Contact Informatica support.
SRS-10563-41: MonitoredActor↩ Info: updateFrom: Failed to update monitor info. Reason:	An internal error was encountered.	Contact Informatica support.
SRS-10563-42: MonitorInfo↩ Message: getInPrintFormat: failed to sort stats. Reason:	An internal error was encountered.	Contact Informatica support.
SRS-10563-43: MonitorInfo↩ Message: getInPrintFormat: monitorInfoCategoryName " + monitorInfoCategory.getName() + ": SRSRegistrationInfo is null	An internal error was encountered.	Contact Informatica support.
SRS-10563-44: MonitorInfo↩ Message: getInPrintFormat: monitorInfoCategoryName " + monitorInfoCategory.getName() + "; connectionEventType: " + connectionEventType + " invalid event state	An internal error was encountered.	Contact Informatica support.
SRS-10563-45: MonitorInfo↩ Message: getInPrintFormat: monitorInfoCategoryName " + monitorInfoCategory.getName() + "; connectionEventType: " + connectionEventType + " invalid event state	An internal error was encountered.	Contact Informatica support.
SRS-10563-46: MonitorInfo↩ Message: getInPrintFormat: monitorInfoCategoryName " + monitorInfoCategory.getName() + ": " + connectionEventType.get↩ Name() + " is not expected	An internal error was encountered.	Contact Informatica support.
SRS-10563-47: MonitorInfo↩ Message: getInPrintFormat: monitorInfoCategoryName " + monitorInfoCategory.getName() + ": SRSRegistrationInfo is null	An internal error was encountered.	Contact Informatica support.
SRS-10563-48: GetActorInfo: setInfo: Failed to cast value to MonitorInfoRecord for stat in " + monitorInfoCategory.getName() + " category	An internal error was encountered.	Contact Informatica support.
SRS-10563-49: MonitorInfo: get↩ SRSMonitorInfoMessage: Failed to cast value to MonitorInfoRecord" + " for stat " + statName + " in category " + monitorInfoCategory.get↩ Name() + ". Reason:	An internal error was encountered.	Contact Informatica support.
SRS-10563-4: RSocket generated an exception:	An internal error was encountered.	Contact Informatica support.

SRS-10563-50: MonitorInfo: get↩ UMClientMonitorInfoMessage: Failed to set value for stat " + statName + " in category " + monitorInfoCategory.getName() + ". Reason: its SRSRegistrationInfo is null	An internal error was encountered.	Contact Informatica support.
SRS-10563-51: MonitorInfo: get↩ UMClientMonitorInfoMessage: Failed to cast value to Monitor↩ InfoRecord " + "for stat " + statName + " in category " + monitorInfoCategory.getName() + ". Reason:	An internal error was encountered.	Contact Informatica support.
SRS-10563-52: MonitorInfo: getConnectionEventsMonitor↩ InfoMessage: Failed to process " + "event " + connectionEvent↩ Type.getName() + " in category " + monitorInfoCategory.getName() + ". Reason: its SRSRegistrationInfo is null	An internal error was encountered.	Contact Informatica support.
SRS-10563-53: MonitorInfo: getConnectionEventsMonitorInfo↩ Message: Failed to cast value " + "to Queue<ConnectionEvent↩ Info> for events " + eventsName + " in category " + monitorInfo↩ Category.getName() + ". Reason:	An internal error was encountered.	Contact Informatica support.
SRS-10563-5: Received a {} whose topic doesn't match the existing topic for this OTID. Found [{}]. Expected [{}]	An internal error was encountered.	Contact Informatica support.
SRS-10563-68: MonitorInfo↩ Message: getInPrintFormat: monitorInfoCategoryName " + monitorInfoCategory.getName() + ": " + connectionEventType.get↩ Name() + " is not expected	An internal error was encountered.	Contact Informatica support.
SRS-10563-7: Received a Disconnect without having first received a SourceInfoRecord for sessionID[" + dRec.getSessionId() + "] topic[" + dRec.getComparisonSymbol() + "] source[" + dRec.getComparison↩ Source() + "] OTID[" + dRec.get↩ DisplayOTID() + "]	An unexpected internal state was encountered, but was handled.	No resolution required. If this happens frequently, contact Informatica support.
SRS-10563-8: Received a Disconnect without having first received a SourceInfoRecord for sessionID[" + dRec.getSessionId() + "] topic[" + dRec.getComparisonSymbol() + "] source[" + dRec.getComparison↩ Source() + "] OTID[" + dRec.get↩ DisplayOTID() + "]	An unexpected internal state was encountered, but was handled.	No resolution required. If this happens frequently, contact Informatica support.

SRS-10612-1: Failed to reschedule timer " + rescheduleSend↩ MonitorInfoTimer.keyName + ". Reason:	Failed to reschedule a sending monitor info timer.	Contact Informatica support.
SRS-10612-2: Failed to start timer " + keyName + ". Reason:	Failed to start a sending monitor info timer.	Contact Informatica support.
SRS-10612-3: Failed to cancel timer " + keyName + ". Reason↩ :	Failed to cancel a sending monitor info timer.	Contact Informatica support.
SRS-10612-4: SRS monitor info update was to be sent, but the LBM source is null	Cannot send SRS monitor info with null LBM source. The source was likely instantiated successfully, but then an unrelated error occurred which forced the closing of the source.	Contact Informatica support.
SRS-10655-1: Received an unexpected [" + leaveRecord.toString() + "]	An unexpected internal state was encountered, but was handled.	No resolution required. If this happens frequently, contact Informatica support.
SRS-10655-2: Received a [" + leaveRecord.toString() + "] for which source info has been updated. " + "Sending updated source info [" + currentSource↩ InfoRecord.toString() + "]	A client has requested specific source info as part of a connection recovery, but the source info was updated in the meantime.	No resolution required.
SRS-10696-10: Received a " + deleteRecord.toString() + " for which there is no SourceInfo↩ Record	An unexpected internal state was encountered, but was handled.	No resolution required. If this happens frequently, contact Informatica support.
SRS-10696-11: Received a " + deleteRecord.toString() + " for which there is no SourceInfo↩ Record	An unexpected internal state was encountered, but was handled.	No resolution required. If this happens frequently, contact Informatica support.
SRS-10696-12: Received a duplicate	Anrare internal state was encountered, but was handled. This state typically results from DROs briefly having more than one proxy source for a given originating source, usually due to a re-routing operation. This state normally resolves itself after a short time.	No resolution required. If this happens frequently, contact Informatica support.
SRS-10696-13: Received an unexpected	An unexpected internal state was encountered, but was handled.	No resolution required. If this happens frequently, contact Informatica support.
SRS-10696-14: Received an unexpected	An unexpected internal state was encountered, but was handled.	No resolution required. If this happens frequently, contact Informatica support.
SRS-10696-20: Attempted to " + deregisterReceiver.toString() + " which is unknown or already deregistered	An internal error was encountered.	Contact Informatica support.
SRS-10696-5: Received a {} whose topic doesn't match the existing topic for this OTID. Found [{}]. Expected [{}]	An internal error was encountered.	Contact Informatica support.

SRS-10696-7: Received a " + disconnectRecord.toString() + " for which there is no SourceInfo↩ Record	An unexpected internal state was encountered, but was handled.	No resolution required. If this happens frequently, contact Informatica support.
SRS-10696-8: Received a " + disconnectRecord.toString() + " for which there is no SourceInfo↩ Record	An unexpected internal state was encountered, but was handled.	No resolution required. If this happens frequently, contact Informatica support.
SRS-10704-10: Attempted to " + registerReceiver.toString() + " with an invalid registration type	An internal error was encountered.	Contact Informatica support.
SRS-10704-11: Attempted to " + deregisterReceiver.toString() + " with an invalid registration type	An internal error was encountered.	Contact Informatica support.
SRS-10704-12: Attempted to " + registerReceiver.toString() + " with null SymbolRecord	An internal error was encountered.	Contact Informatica support.
SRS-10704-1: Unable to establish connection for sessionID[" + srsRegistration.getSessionId() + "] due to unsupported interestMode[" + srsRegistration.getInterest↩ Mode() + "]. Only supported interestMode[0 - " + Interest↩ ModeBitMap.allInterestModeBits() + "]	A client with an unsupported interest mode attempted to establish a connection with the SRS.	Change to a supported interest mode and try again.
SRS-10704-2: Unable to establish connection for sessionID[" + srsMessage.registration_↩ request.session_id + "] due to unsupported appType[" + srs↩ Message.registration_request.↩ app_type + "]. Only supported appType[" + SRSMessage.LBM_↩ SRS_APP_TYPE_APPLICATION + " or " + SRSMessage.LBM_SR↩ S_APP_TYPE_TNWGD + " or " + SRSMessage.LBM_SRS_APP_↩ TYPE_STORE + "]	A client with an unsupported application type attempted to establish a connection with the SRS.	Contact Informatica support.
SRS-10704-3: Establishing connection for client with sessionID[" + srsRegistration.getSessionId() + "] which is on an earlier protocol↩ Version[" + srsRegistration.get↩ ProtocolVersion() + "]. SRS is on protocolVersion[" + SRS↩ Message.LBM_SRS_PROTOCO↩ L_VERSION + "]. Due to protocol↩ Version " + "mismatch, client will be connected in interestMode[0]	A client with an earlier version is establishing a connection with the SRS.	If client uses earlier version by design, then no need to do anything. Otherwise, reconcile versions.

SRS-10704-4: Establishing connection for client with sessionID[" + srsRegistration.getSessionId() + "] which is on an earlier protocol↩ Version[" + srsRegistration.get↩ ProtocolVersion() + "]. SRS is on protocolVersion[" + SRS↩ Message.LBM_SRS_PROTOCO↩ L_VERSION + "]	A client with an earlier version is establishing a connection with the SRS.	If client uses earlier version by design, then no need to do anything. Otherwise, reconcile versions.
SRS-10704-5: ClientActor" + clientId + " received a " + receiver↩ DeleteRecord.toString() + " for which there is no corresponding ReceiverRegistration	An internal error was encountered.	Contact Informatica support.
SRS-10715-1: Received a duplicate	An internal error was encountered.	Contact Informatica support.
SRS-10719-10: Attempted to populate a message with an unknown ID	An internal error was encountered.	Contact Informatica support.
SRS-10719-1: Attempted to send a record which should not be sent to clients	An internal error was encountered.	Contact Informatica support.
SRS-10728-1: Failed to remove " + receiverDeleteRecord.toString() + " from RIR_CAR map	An internal error was encountered.	Contact Informatica support.
SRS-10728-20: ClientActor" + clientId + " received a " + receiver↩ DeleteRecord.toString() + " for which there is no corresponding RIR	An internal error was encountered.	Contact Informatica support.
SRS-10728-2: Received a " + receiverDeleteRecord.toString() + " which could " + "not be paired with an RIR	An internal error was encountered.	Contact Informatica support.
SRS-10728-3: Received a " + receiverDeleteRecord.toString() + " from a client actor " + "which has not sent an RIR	An internal error was encountered.	Contact Informatica support.
SRS-10728-4: Received a " + receiverDeleteRecord.toString() + " for which there is " + "no topic map entry	An internal error was encountered.	Contact Informatica support.
SRS-10728-5: Received a " + receiverDeleteRecord.toString() + " for which there is no " + "corresponding RIR_CAR map entry	An internal error was encountered.	Contact Informatica support.
SRS-10728-6: Attempted to " + deregisterReceiver.toString() + " for which there is no topic map entry	An internal error was encountered.	Contact Informatica support.
SRS-10728-7: Attempted to " + deregisterReceiver.toString() + " with null SymbolRecord	An internal error was encountered.	Contact Informatica support.
SRS-10728-8: Attempted to " + deregisterReceiver.toString() + " before TCP disconnect	An internal error was encountered.	Contact Informatica support.

SRS-10745-10: Failed to match input[" + input + "] to pattern[" + pattern + "]. Reason:	An internal error was encountered.	Contact Informatica support.
SRS-10745-1: Received a duplicate	An internal error was encountered.	Contact Informatica support.
SRS-10745-20: Received duplicate	The SRS received a duplicate WIR.	Contact Informatica support.
SRS-10745-2: Matched a wildcard receiver info record with null record consumer	An internal error was encountered.	Contact Informatica support.
SRS-10745-30: Received duplicate	The SRS received a duplicate RIR.	Contact Informatica support.
SRS-10745-3: Matched a wildcard receiver info record with null record consumer	An internal error was encountered.	Contact Informatica support.
SRS-10745-4: Attempted to " + registerReceiver.toString() + " with a non-ReceiverInfoRecord	An internal error was encountered.	Contact Informatica support.
SRS-10745-5: Attempted to " + deregisterReceiver.toString() + " with a non-ReceiverInfoRecord	An internal error was encountered.	Contact Informatica support.
SRS-10757-1: Failed to remove " + wildcardReceiverDelete↩Record.toString() + " from WIR map	An internal error was encountered.	Contact Informatica support.
SRS-10757-20: Received a " + wildcardReceiverDeleteRecord.↩toString() + " for which there is no " + "corresponding WIR	An internal error was encountered.	Contact Informatica support.
SRS-10757-2: Received a " + wildcardReceiverDeleteRecord.↩toString() + " which could " + "not be paired with a WIR	An internal error was encountered.	Contact Informatica support.
SRS-10757-3: Received a " + wildcardReceiverDeleteRecord.↩toString() + " from a client actor " + "which has not sent an WIR	An internal error was encountered.	Contact Informatica support.
SRS-10757-4: Matched a wildcard receiver delete record with null record consumer	An internal error was encountered.	Contact Informatica support.
SRS-10757-5: Received a " + wildcardReceiverDeleteRecord.↩toString() + " for which there is no " + "corresponding WIR map entry	An internal error was encountered.	Contact Informatica support.
SRS-10770-1: Failed to remove " + receiverInfoRecord.toString() + " from RIR_CAR map	An internal error was encountered.	Contact Informatica support.
SRS-10770-2: Failed to remove " + receiverInfoRecord.toString() + " from RIR_CAR map	An internal error was encountered.	Contact Informatica support.
SRS-10770-3: Failed to remove " + wildcardReceiverInfoRecord.to↩String() + " from WIR_CAR map	An internal error was encountered.	Contact Informatica support.
SRS-10770-4: Failed to remove " + wildcardReceiverInfoRecord.to↩String() + " from WIR_CAR map	An internal error was encountered.	Contact Informatica support.

SRS-10848-11: Failed to schedule a " + CHECK + " timer. Reason:	Failed to schedule a "check inactive SIRs" timer.	Contact Informatica support.
SRS-10848-12: Failed to schedule a " + CHECK + " timer. Reason:	Failed to schedule a "check inactive SIRs" timer.	Contact Informatica support.
SRS-10848-1: Failed to schedule a " + CHECK_INACTIVE_SIRS + " timer. Reason:	Failed to schedule a "check inactive SIRs" timer.	Contact Informatica support.
SRS-10848-21: Failed to schedule a " + CHECK + " timer. Reason:	Failed to schedule a "check record queue" timer.	Contact Informatica support.
SRS-10848-2: Failed to schedule an " + SLR_BACKOFF_TIMER + ". Reason:	Failed to schedule an SLR backoff timer.	Contact Informatica support.
SRS-10848-31: Failed to schedule a "request monitor info" timer. Reason:	Failed to schedule a "request monitor info" timer.	Contact Informatica support.
SRS-10848-3: Failed to schedule a " + CHECK_INACTIVE_SIRS + " timer. Reason:	Failed to schedule a "check inactive SIRs" timer.	Contact Informatica support.
SRS-10848-4: Failed to schedule an " + SLR_BACKOFF_TIMER + ". Reason:	Failed to schedule an SLR backoff timer.	Contact Informatica support.
SRS-10848-5: Failed to schedule a " + CHECK_INACTIVE_RIRS + " timer. Reason:	Failed to schedule a "check inactive RIRs" timer.	Contact Informatica support.
SRS-10848-6: Failed to schedule a " + CHECK_INACTIVE_RIRS + " timer. Reason:	Failed to schedule a "check inactive RIRs" timer.	Contact Informatica support.
SRS-10848-7: Failed to schedule a " + CHECK_INACTIVE_WIRS + " timer. Reason:	Failed to schedule a "check inactive WIRs" timer.	Contact Informatica support.
SRS-10848-8: Failed to schedule a " + CHECK_INACTIVE_WIRS + " timer. Reason:	Failed to schedule a "check inactive WIRs" timer.	Contact Informatica support.
SRS-10943-100: Received duplicate	The SRS received a duplicate C↩NIR.	Contact Informatica support.
SRS-10943-101: Received duplicate	The SRS received a duplicate C↩NQR.	Contact Informatica support.
SRS-10943-110: Sent unexpected " + clientRecord.toString() + " for clientID[" + clientId + "]	The SRS sent an invalid SRS message.	Contact Informatica support.
SRS-10943-120: " + existing↩ContextNameInfoRecord.toString() + " does not exist in the inactive CNIR list	An internal error was encountered.	Contact Informatica support.
SRS-10943-121: Received a " + contextNameInfoRecord.toString() + " that does not match existing CNIR name	An internal error was encountered.	Contact Informatica support.
SRS-10943-122: Received an update " + contextNameInfoRecord.↩toString() + " for " + "which there is no name map entry	An internal error was encountered.	Contact Informatica support.
SRS-10943-125: Attempted to " + registerReceiver.toString() + " with an invalid registration type	An internal error was encountered.	Contact Informatica support.

SRS-10943-126: Attempted to " + registerReceiver.toString() + " with null NameRecord	An internal error was encountered.	Contact Informatica support.
SRS-10943-127: Attempted to " + deregisterReceiver.toString() + " with an invalid registration type	An internal error was encountered.	Contact Informatica support.
SRS-10943-128: Attempted to " + deregisterReceiver.toString() + " with null NameRecord	An internal error was encountered.	Contact Informatica support.
SRS-10943-129: Attempted to " + deregisterReceiver.toString() + " for which there is no name map entry	An internal error was encountered.	Contact Informatica support.
SRS-10943-140: Failed to remove " + originContextInstance + " mapping from CNIR map	An internal error was encountered.	Contact Informatica support.
SRS-10943-150: Received an unexpected	An internal error was encountered.	Contact Informatica support.
SRS-10943-151: Failed to schedule a " + CHECK_INACTIVE_CN↩IRS + " timer. Reason:	Failed to schedule a "check inactive CNIRs" timer.	Contact Informatica support.
SRS-10943-152: Expired an unexpected	An internal error was encountered.	Contact Informatica support.
SRS-10943-153: Expired " + contextNameInfoRecord.toString() + " for " + "which there is no name map entry	An internal error was encountered.	Contact Informatica support.
SRS-10943-155: Failed to schedule a " + CHECK_INACTIVE_CN↩IRS + " timer. Reason:	Failed to schedule a "check inactive CNIRs" timer.	Contact Informatica support.
SRS-10943-1: Attempted to populate a message with an unknown ID	An internal error was encountered.	Contact Informatica support.
SRS-10943-21: Failed to find domain " + domainId + " and " + routeInfoRecord.toString() + " in the domain ID map	An internal error was encountered.	Contact Informatica support.
SRS-10943-22: Received a duplicate	An internal error was encountered.	Contact Informatica support.
SRS-10943-23: Received a duplicate	An internal error was encountered.	Contact Informatica support.
SRS-10943-24: Received a " + domainInfoRecord.toString() + " with a domain ID" + " that does not match the existing domain ID	The SRS received a subsequent domain information record with a domain ID that does not match the existing domain ID.	Check if the <domain-id> configuration value is the same for all D↩ROs serviced by this SRS.
SRS-10943-25: Attempted to " + registerReceiver.toString() + " with an invalid registration type	An internal error was encountered.	Contact Informatica support.
SRS-10943-26: Attempted to " + deregisterReceiver.toString() + " with an invalid registration type	An internal error was encountered.	Contact Informatica support.
SRS-10943-27: Received a " + domainDisconnectRecord.to↩String() + " for which there is no " + "corresponding DIR map entry	An internal error was encountered.	Contact Informatica support.
SRS-10943-28: Failed to schedule a " + CHECK_INACTIVE_DIRS + " timer. Reason:	Failed to schedule a "check inactive DIRs" timer.	Contact Informatica support.

SRS-10943-2: Attempted to populate a message with an unknown ID	An internal error was encountered.	Contact Informatica support.
SRS-10943-30: Expired a " + domainInfoRecord.toString() + " for which there is no " + "corresponding DIR_CAR map entry	An internal error was encountered.	Contact Informatica support.
SRS-10943-31: Failed to remove " + domainInfoRecord.toString() + " from DIR_CAR map	An internal error was encountered.	Contact Informatica support.
SRS-10943-32: Failed to schedule a " + CHECK_INACTIVE_DIRS + " timer. Reason:	Failed to schedule a "check inactive DIRs" timer.	Contact Informatica support.
SRS-10943-3: Attempted to populate a message with an unknown ID	An internal error was encountered.	Contact Informatica support.
SRS-10943-50: Received duplicate	The SRS received a duplicate R↩TIR.	Contact Informatica support.
SRS-10943-60: Received a " + routeDisconnectRecord.toString() + " for which there is no " + "corresponding RTIR map entry	An internal error was encountered.	Contact Informatica support.
SRS-10943-61: Received a " + routeDisconnectRecord.toString() + " which does not match " + "existing	An internal error was encountered.	Contact Informatica support.
SRS-10943-62: Failed to schedule a " + CHECK_INACTIVE_RTIRS + " timer. Reason:	Failed to schedule a "check inactive RTIRs" timer.	Contact Informatica support.
SRS-10943-65: Expired a " + routeInfoRecord.toString() + " for which there is no " + "corresponding RTIR map entry	An internal error was encountered.	Contact Informatica support.
SRS-10943-66: Failed to schedule a " + CHECK_INACTIVE_RTIRS + " timer. Reason:	Failed to schedule a "check inactive RTIRs" timer.	Contact Informatica support.
SRS-11063-1: Received an unexpected ContextNameEndRecord message for clientID[" + clientId + "] with message id:	The SRS received an unexpected ContextNameEndRecord.	Check the SRSs versions and make sure all SRSs are upgraded to the latest version.
SRS-11171-10: MonitorInfo↩CategoryName " + monitor↩InfoCategory.getName() + ": " + statName + " is not expected	An internal error was encountered.	Contact Informatica support.
SRS-11171-11: MonitorInfo↩CategoryName " + monitor↩InfoCategory.getName() + ": " + statName + " is not expected	An internal error was encountered.	Contact Informatica support.
SRS-11171-12: MonitorInfo↩CategoryName " + monitor↩InfoCategory.getName() + ": " + statName + " is not expected	An internal error was encountered.	Contact Informatica support.
SRS-11171-13: MonitorInfo↩CategoryName " + monitor↩InfoCategory.getName() + ": " + statName + " is not expected	An internal error was encountered.	Contact Informatica support.

SRS-11171-14: MonitorInfo↩ CategoryName " + monitor↩ InfoCategory.getName() + ": " + connectionEventType.getName() + " is not expected	An internal error was encountered.	Contact Informatica support.
SRS-11171-15: Connection↩ EventType " + connectionEvent↩ Type.getName() + " is not expected	An internal error was encountered.	Contact Informatica support.
SRS-11171-16: MonitorInfo↩ CategoryName " + monitor↩ InfoCategory.getName() + ": " + configOptionName + " has unexpected format	An internal error was encountered.	Contact Informatica support.
SRS-11171-17: MonitorInfo↩ CategoryName " + monitor↩ InfoCategory.getName() + ": " + configOptionName + " is not expected	An internal error was encountered.	Contact Informatica support.
SRS-11171-18: MonitorInfo↩ CategoryName " + monitor↩ InfoCategory.getName() + ": " + configOptionName + " is not expected	An internal error was encountered.	Contact Informatica support.
SRS-11171-1: Failed to send a S↩ RSMonMsg. Reason:	An internal error was encountered.	Contact Informatica support.
SRS-11171-2: Failed to serialize a MonitorInfoMessage from category " + monitorInfoMessage.get↩ MonitorInfoCategory().getName() + ". Reason:	An internal error was encountered.	Contact Informatica support.
SRS-11195-1: Both the <debug-monitor><ping-interval> and <daemon-monitor><ping-interval>" + " are configured. The <daemon-monitor><ping-interval> value of " + srsConfig.↩ getDaemonMonitorPingInterval() + " will be used for both	The debug monitor is enabled and both <debug-monitor><ping-interval> and <daemon-monitor><ping-interval> are configured. The <daemon-monitor><ping-interval> value takes precedence	If the <daemon-monitor><ping-interval> value is as intended, no resolution is needed. For more details, contact Informatica support.

12.4 UM Dynamic Routing Log Messages

Gwd-10163-01: LBMR Topic Resolution TNWG Interest packet malformed (d:d). Dropping remainder. Origin: s:d	LBMR Data received contain invalid data.	Check the source (IP:Port) for possible version mismatch or service attack.
Gwd-10163-02: LBMR Topic Resolution TNWG Interest packet malformed (d:d). Dropping remainder. Origin: s:d	LBMR Data received contain invalid data.	Check the source (IP:Port) for possible version mismatch or service attack.

Gwd-10163-03: LBMR Topic Resolution TNWG Interest packet malformed (d:d). Dropping remainder. Origin: s:d	LBMR Data received contain invalid data.	Check the source (IP:Port) for possible version mismatch or service attack.
Gwd-10163-04: LBMR Topic Resolution TNWG Interest packet malformed (d:d). Dropping remainder. Origin: s:d	LBMR Data received contain invalid data.	Check the source (IP:Port) for possible version mismatch or service attack.
Gwd-10163-05: LBMR Topic Resolution TNWG Interest packet malformed. Dropping remainder. Origin: s:d	LBMR Data received contain invalid data.	Check the source (IP:Port) for possible version mismatch or service attack.
Gwd-10163-06: LBMR Topic Resolution TNWG Interest packet malformed (d:d). Dropping remainder. Origin: s:d	LBMR Data received contain invalid data.	Check the source (IP:Port) for possible version mismatch or service attack.
Gwd-10163-07: LBMR Topic Resolution TNWG Interest packet malformed. Dropping remainder. Origin: s:d	LBMR Data received contain invalid data.	Check the source (IP:Port) for possible version mismatch or service attack.
Gwd-10163-08: LBMR Topic Resolution TNWG Interest packet malformed (d). Dropping remainder. Origin: s:d	LBMR Data received contain invalid data.	Check the source (IP:Port) for possible version mismatch or service attack.
Gwd-10163-09: LBMR Topic Resolution TNWG Interest packet malformed (d). Dropping remainder. Origin: s:d	LBMR Data received contain invalid data.	Check the source (IP:Port) for possible version mismatch or service attack.
Gwd-10185-100: unknown group name: "%s"	The group name chosen is not a valid group.	Choose a valid group.
Gwd-10185-101: monitor section lbm-config must have a value	Expecting a string that contains the path to the config file.	Please specify a string that contains the path to the config file.
Gwd-10185-102: monitor section xml-config must have a value	Expecting a string that contains the path to the config file.	Please specify a string that contains the path to the config file.
Gwd-10185-103: undefined publishing interval (s) for group: "%s"	The publishing interval needs to be a valid number, greater than (or equal to) 0.	Specify a valid number.
Gwd-10185-104: bad portal number returned from tnwg_getportal↩_fromstring()	Unable to find portal based on portal name specified by user	Verify that the portal name is specified in the DRO XML file
Gwd-10185-10: unable to create gateway cfg stat group: s	Failure when creating daemon monitor gateway config stats group	
Gwd-10185-11: unable to create mallinfo stat group: s	Failure created while creating daemon monitor malloc info stat group	
Gwd-10185-12: unable to create portals stat group:	Failure while creating daemon monitor portal stats stat group	
Gwd-10185-13: unable to create portal config stat group: s	Failure while creating daemon monitor portal config stats group	
Gwd-10185-14: error reading malloc info record	Error attempting to read daemon stats malloc info record	
Gwd-10185-15: unable to schedule timer for mallinfo stat group callback: s	Failure creating mallinfo stat group callback timer	
Gwd-10185-16: error reading malloc info record	Error attempting to read daemon stats malloc info record	

Gwd-10185-17: unable to schedule timer for mallinfo stat group call back, s	failure scheduling timer for mallinfo stat group callback timer	
Gwd-10185-18: error reading malloc info record	Error attempting to read daemon stats malloc info record	
Gwd-10185-19: unable to schedule timer for gateway config stat group call back, s	Error setting up gateway config stat group callback timer	
Gwd-10185-1: unable to create context attributes: s	Failure while creating context attributes	
Gwd-10185-20: error trying to publish gateway config record	Failure publishing gateway config record	
Gwd-10185-21: unable to schedule timer for gateway config stat group call back, s	Failure setting up gateway config stat group callback timer	
Gwd-10185-22: error trying to read portal stats record for portal d	Failure reading portal stats record	
Gwd-10185-23: error trying to initialize portal stats record	Failure initializing portal stats record	
Gwd-10185-24: unable to schedule timer for portalstats stat group callback: s	Error scheduling callback timer for portal stats stat group	
Gwd-10185-25: bad portal type in tnwg_portstat_msg_init, d	Bad portal type in portal structure	
Gwd-10185-26: error trying to find portal structure from portal number d	Unable to find portal based on index stored in daemon stats monitor global array	
Gwd-10185-27: error trying to read endpoint portal record	Error reading stat record for endpoint	
Gwd-10185-28: error trying to read peer portal record	Error reading stat record for peer	
Gwd-10185-29: unknown portal type, d	Bad portal type specified in portal global structure	
Gwd-10185-2: **lbmaux_context↩_attr_setopt_from_file()** failed, s	Failure while setting up extra config opts for DRO daemon monitor	Check attributes in "lbm-config" config file specified in the DRO's xml file
Gwd-10185-30: error trying to retrieve endpoint portal stats data	Error trying to copy portal stats	
Gwd-10185-31: error trying to retrieve peer portal stats record	Error trying to retrieve endpoint portal stats data	
Gwd-10185-32: unable to schedule timer for portalstats stat group callback: s	Error setting up timer for daemon stats portal stats stat group callback	
Gwd-10185-33: error trying to read portal stats record	Error reading portal stats stat group record	
Gwd-10185-34: error trying to retrieve route manager topology record	Failure reading route manager topology stat group record	
Gwd-10185-35: unable to schedule timer for rm stat group callback: s	Failure setting up route manager stat group callback timer	
Gwd-10185-36: error trying to retrieve route manager topology record	Failure reading route manager stat group record	
Gwd-10185-37: tnwg_rm_stat_↩grp_read() returned a null pointer	Received null pointer while assembling route manager stat group record	

Gwd-10185-38: unable to schedule timer for rm stat group callback: s	Error scheduling callback timer for route manager stat group	
Gwd-10185-39: tnwg_rm_info() returned an error	Failure accessing route manager info for route manager stat group	
Gwd-10185-3: **lbm_context_attr_setopt()** failed, s	Failure setting up attributes for daemon monitor remote control handler	
Gwd-10185-40: tnwg_rm_stat_grp_collect_portal_info() returned an error	Failure collecting portal info for route manager stat group	
Gwd-10185-41: error from tnwg_rm_others_collect_info()	Failure collecting info for other gateways for route manager stat group	
Gwd-10185-42: error trying to build the rm topology record	Failure building route manager stat group record	
Gwd-10185-43: passed in null pointer to tnwg_rm_stat_grp_read()	Attempt to build rm stat group record resulted in null pointer returned	
Gwd-10185-44: error returned from tnwg_rm_stat_grp_buffer_cleanup()	Failure encountered returning malloc'd buffers for route manager stat group	
Gwd-10185-45: bad record type passed to tnwg_rm_stat_grp_insert_item_into_record() d	Bad route manager stat group sub group type	
Gwd-10185-48: error returned from tnwg_rm_stat_grp_read()	Failure reading route manager stat group record	
Gwd-10185-49: bad recptr returned from tnwg_rm_stat_grp_read()	Read of route manager stat group record resulted in null pointer returned	
Gwd-10185-4: unable to create context attributes: s	Failure creating lbm context for daemon stats monitor	
Gwd-10185-50: error returned from tnwg_dstat_publish()	Failure attempting to publish route manager stat group record	
Gwd-10185-51: unable to schedule timer for portal cfg stat group callback: s	Failure scheduling callback timer for route manager stat group	
Gwd-10185-52: unable to schedule timer for portal cfg stat group callback: s	Failure scheduling callback timer for portal config stat group	
Gwd-10185-53: error from tnwg_portal_find() for portal number d	Null pointer returned when obtaining pointer to portal structure	
Gwd-10185-54: error returned from tnwg_portalcfg_stat_grp_read()	Failure reading record for portal config stat group	
Gwd-10185-55: error returned from tnwg_dstat_publish()	Failure attempting to publish portal config stat group record	
Gwd-10185-56: bad pointer to portal passed to tnwg_portalcfg_stat_grp_read()	Null pointer passed to tnwg_portalcfg_stat_grp_read()	
Gwd-10185-57: **lbm_context_attr_dump()** failed, s	Failure attempting to access portal config source context attributes from config tables	

Gwd-10185-58: **lbm_context_attr_dump()** failed, s	Failure attempting to access portal config receiver context attributes from config tables	
Gwd-10185-59: **lbm_event_queue_attr_dump()** failed, s	Failure attempting to access portal config event queue attributes from config tables	
Gwd-10185-5: unable to create src topic attributes: s	Error creating source attributes for daemon stats monitor	
Gwd-10185-60: bad config type in tnwg_portalcfg_stat_grp_read() d	Invalid config type specified for Peer portal	
Gwd-10185-61: **lbm_context_attr_dump()** failed, s	Failure attempting to access portal config source context for endpoint portal	
Gwd-10185-62: **lbm_context_attr_dump()** failed, s	Failure attempting to access endpoint portal config receiver context attributes from config table	
Gwd-10185-63: **lbm_src_topic_attr_dump()** failed, s	Failure attempting to access endpoint portal config source attributes from config table	
Gwd-10185-64: **lbm_rcv_topic_attr_dump()** failed, s	Failure attempting to access endpoint portal config receiver attributes from config table	
Gwd-10185-65: **lbm_wildcard_rcv_attr_dump()** failed, s	Failure attempting to access endpoint portal wildcard receiver attributes from config table	
Gwd-10185-66: **lbm_event_queue_attr_dump()** failed, s	Failure attempting to access endpoint portal event queue attributes from config table	
Gwd-10185-67: bad portal type d	Invalid portal type	
Gwd-10185-69: Invalid record type d	Attempt to publish invalid stats group record type	
Gwd-10185-6: unable to alloc src topic: s	Error allocating src topic for daemon stats monitor	
Gwd-10185-70: error from tnwg_mallinfo_stat_grp_snapshot()	Failure reading malloc info stat group record	
Gwd-10185-71: error from tnwg_rm_stat_grp_snapshot()	Failure reading route manager stat group record	
Gwd-10185-72: bad portal number returned from tnwg_getportal_fromstring()	Unable to find portal based on portal name specified by user	Verify that the portal name is specified in the DRO XML file
Gwd-10185-73: error returned from tnwg_portalstats_stat_grp_snapshot()	Failure reading a portal stats stat group record	
Gwd-10185-74: error returned from tnwg_gatewaycfg_stat_grp_snapshot()	Failure reading a gateway config stats group record	
Gwd-10185-76: error returned from tnwg_portalcfg_stat_grp-snapshot()	Unable to read portal config stat group record	
Gwd-10185-77: bad stat grp d	Attempt to obtain snapshot of record for invalid stat group	
Gwd-10185-78: error returned from tnwg_dstat_setinterval()	Failure changing the publishing interval for route manager stat group	

Gwd-10185-79: bad portal number returned from tnwg_getportal↩_fromstring()	Unable to find portal based on portal name specified by user	Verify that the portal name is specified in the DRO XML file
Gwd-10185-7: unable to create src: s	Error creating source for daemon stats monitor	
Gwd-10185-80: error returned from tnwg_dstat_setinterval()	Failure changing the publishing interval for portal stats stat group	
Gwd-10185-81: error returned from tnwg_dstat_setinterval()	Failure changing the publishing interval for gateway config stat group	
Gwd-10185-82: error returned from tnwg_getportal_fromstring()	Unable to find portal based on portal name specified by user	Verify that the portal name is specified in the DRO XML file
Gwd-10185-83: error returned from tnwg_dstat_setinterval()	Failure changing the publishing interval for portal config stat group	
Gwd-10185-84: error returned from tnwg_dstat_setinterval()	Failure changing the publishing interval for mallinfo stat group	
Gwd-10185-85: bad group type, d	Invalid stat group type specified for request to change publishing interval	
Gwd-10185-86: unable to schedule timer	Failure to schedule callback timer	
Gwd-10185-87: bad portal number passed to tnwg_dstat_setinterval↩_for_portals(), d	Bad portal number specified in request to change the publishing interval	
Gwd-10185-88: unable to schedule timer for portal stats stat group s	Failure rescheduling callback timer for a portal type (cfg or stat) stat group	
Gwd-10185-89: Errors detected while initializing daemon stats monitor	Errors detected initilizaing daemon stats monitor for gateway	Verify all daemon monitor related attributes are correct in xml and config files
Gwd-10185-8: unable to create per portal info	Failure returned while creating per portal info in daemon stats monitor	
Gwd-10185-93: invalid DRO dmon message [s] from s [s]	UM dmon received an invalid/corrupted immediate message.	Verify that messages sent on the request port are valid.
Gwd-10185-94: DRO dmon failed to send error response [s]	UM could not respond to a dmon immediate message.	Contact Informatica Support.
Gwd-10185-95: DRO dmon failed to send success response [s]	UM could not respond to a dmon immediate message.	Contact Informatica Support.
Gwd-10185-96: DRO dmon received control message exceeding 255 bytes	UM daemon monitor received an invalid control message exceeding 255 bytes.	Verify that messages sent on the control channel are <= 255 bytes.
Gwd-10185-97: DRO dmon failed to send error response [s]	UM could not respond to a dmon immediate message.	Contact Informatica Support.
Gwd-10185-98: DRO received unknown lbm_msg_t type x [s][s]	UM daemon monitor received unknown lbm_msg_t type.	Stop the source of unknown messages to the daemon monitor.
Gwd-10185-99: Bad config type = d	Invalid config type specified	
Gwd-10185-9: unable to create route manager stat group	Failure returned while creating daemon monitor route manager stats group	
Gwd-10327-20: invalid nak-handling send-naks [s]	The specified <nak-handling> send-naks value needs to be yes or no.	Check the configuration file.

Gwd-10434-1: Portal [s] removed enqueued messages due to Proxy Source delete	The named portal removed queued messages upon deleting the Proxy Source.	This is an informational message only. The Proxy Source was no longer needed and the queued messages were removed.
Gwd-10588-1: lbmaux_src_topic↩_setopt_from_file() failed, s	Failure while setting up source config opts for DRO daemon monitor	Check attributes in "lbm-config" config file specified in the DRO's xml file
Gwd-10763-1: Unable to create daemon stats sender thread: s	Failure to create sender thread for daemon stats	Contact Informatica Support.
Gwd-10763-2: tnwg_dstat_send↩_thread_create() error creating TL queue: s	Unable to create two-lock queue	Contact Informatica Support.
Gwd-10763-3: tnwg_dstat_send↩_thread_main(): Error while dequeueing	Error while dequeueing from TL queue	Contact Informatica Support.
Gwd-10763-4: tnwg_dstat_send↩_thread_main: Unable to publish message of type d: s	UM was unable to publish dmon message.	Contact Informatica Support.
Gwd-10763-5: tnwg_dstat_send↩_thread_create() error creating send thread: s	Unable to create two-lock queue	Contact Informatica Support.
Gwd-10958-1: Using default L↩BM context and source configuration values for daemon stats	No Configuration file specified for daemon stats	Using Default LBM configuration values
Gwd-10995-11: could not start automonitoring for Gateway "%s" with Daemon Statistics enabled	Automonitoring failed to start for the gateway because Daemon Statistics is enabled.	Disable Daemon Statistics by removing the Daemon level <daemon-monitor> Element from the gateway configuration.
Gwd-10995-12: tnwg_retrieve_↩mon_stats_othergateway() failed	Failure from call to tnwg_retrieve↩_mon_stats_othergateway()	
Gwd-10995-13: Failed to find the local stats in the RM stats	Failed to find the local stats in the RM stats	
Gwd-10995-14: Failed to find the local stats in the RM stats	Failed to find the local stats in the RM stats	
Gwd-10995-15: Failed to find portal stats in the RM stats	Failed to find portal stats in the RM stats	
Gwd-10995-16: tnwg_retrieve_↩mon_stats_portal_peer() failed	Failure from call to tnwg_retrieve↩_mon_stats_portal_peer()	
Gwd-10995-17: tnwg_retrieve_↩mon_stats_portal_endpoint() failed	Failure from call to tnwg_retrieve↩_mon_stats_portal_endpoint()	
Gwd-10995-18: Failed to find other gateway stats in RM stats	Failed to find other gateway stats in RM stats	
Gwd-10995-19: Failed to find other gateway portal stats in the RM stats	Failed to find other gateway portal stats in the RM stats	
Gwd-10995-1: Errors detected while initializing PB Format stats monitor	Errors detected initilizaing PB format stats monitor for gateway	Verify all daemon monitor related attributes are correct in xml and config files
Gwd-10995-20: error from tnwg_↩portal_find() for portal number d	Null pointer returned when obtaining pointer to portal structure	
Gwd-10995-21: unable to create portals stat group:	Failure while creating daemon monitor portal stats stat group	
Gwd-10995-22: unable to create portal config stat group: s	Failure while creating daemon monitor portal config stats group	
Gwd-10995-23: tnwg_retrieve_↩mon_stats_portal() failed	Failure from call to tnwg_retrieve↩_mon_stats_portal()	

Gwd-10995-24: tnwg_retrieve_↩ lbmmon_msg was called with a null pointer	tnwg_retrieve_lbmmon_msg was called with a null pointer	
Gwd-10995-25: unable to create route manager stat group	Failure returned while creating daemon monitor route manager stats group	
Gwd-10995-26: tnwg_retrieve_↩ mon_stats_local() failed	Failure from call to tnwg_retrieve↩ _mon_stats_local()	
Gwd-10995-2: tnwg_retrieve_↩ mon_config failed	Failure from call to tnwg_retrieve↩ _mon_config()	
Gwd-10995-3: tnwg_retrieve_↩ stats_msg() failed	Failure from call to tnwg_retrieve↩ _stats_msg()	
Gwd-10995-5: tnwg_portalcfg_↩ stat_grp_pb_snapshot() failed	Failure from call to tnwg_↩ portalcfg_stat_grp_pb_snapshot()	
Gwd-10995-8: tnwg_read_portal↩ _record() failed for portal number d	Failure from call to tnwg_read_↩ portal_record()	
Gwd-10995-9: tnwg_rm_stat_↩ grp_read() failed	Failure from call to tnwg_rm_stat↩ _grp_read()	
Gwd-11041-1: error starting portal [s] [d]: s	The error shown was detected while starting the given portal.	Please resolve the error shown or contact service.
Gwd-11041-2: error starting portal [s] [d]: s	The error shown was detected while starting the given portal.	Please resolve the error shown or contact service.
Gwd-11254-101: UDP disconnect	A Peer UDP socket disconnect has occured	Check the status of the remote Peer or the configured timeouts.
Gwd-11254-102: UDP disconnect	A Peer UDP socket disconnect has occured	Check the status of the remote Peer or the configured timeouts.
Gwd-11254-103: failed to create UDP socket [d]: s	A Peer failed to create the UDP socket	Check port availabiltiy or configuration.
Gwd-11254-104: peer is configured for udp but received a connection from a companion that is not using udp. This is not supported.	When using udp peer links, both sides must be configured for udp.	Please check the configuration.
Gwd-11254-10: coalesce-threshold value [s] is invalid	Element <coalesce-threshold> in <udp> contains an invalid value.	Check the configuration file.
Gwd-11254-11: invalid transmission-window size [s]	The specified <transmission-window> size value is either non-numeric or the value is out of range.	Check the configuration file.
Gwd-11254-12: invalid transmission-window limit [s]	The specified <transmission-window> limit value is either non-numeric or the value is out of range.	Check the configuration file.
Gwd-11254-13: invalid peer-rate-limit data [s]	The specified <peer-rate-limit> data value is either non-numeric or the value is out of range.	Check the configuration file.
Gwd-11254-14: invalid peer-rate-limit retransmit [s]	The specified <peer-rate-limit> retransmit value is either non-numeric or the value is out of range.	Check the configuration file.
Gwd-11254-15: invalid peer-rate-limit interval [s]	The specified <peer-rate-limit> interval value is either non-numeric or the value is out of range.	Check the configuration file.

Gwd-11254-16: invalid nak-handling initial-backoff-interval [s]	The specified <nak-handling> initial-backoff-interval value is either non-numeric or the value is out of range.	Check the configuration file.
Gwd-11254-17: invalid nak-handling backoff-interval [s]	The specified <nak-handling> backoff-interval value is either non-numeric or the value is out of range.	Check the configuration file.
Gwd-11254-18: invalid nak-handling suppress-interval [s]	The specified <nak-handling> suppress-interval value is either non-numeric or the value is out of range.	Check the configuration file.
Gwd-11254-19: invalid nak-handling generation-interval [s]	The specified <nak-handling> generation-interval value is either non-numeric or the value is out of range.	Check the configuration file.
Gwd-11254-1: port must not be blank	Element <port> in <udp> must contain a valid port number.	Check the configuration file.
Gwd-11254-20: invalid nak-handling ignore-interval [s]	The specified <nak-handling> ignore-interval value is either non-numeric or the value is out of range.	Check the configuration file.
Gwd-11254-21: invalid session-message min-interval [s]	The specified <session-message> min-interval value is either non-numeric or the value is out of range.	Check the configuration file.
Gwd-11254-22: invalid session-message max-interval [s]	The specified <session-message> max-interval value is either non-numeric or the value is out of range.	Check the configuration file.
Gwd-11254-23: invalid session-message activity-timeout [s]	The specified <session-message> activity-timeout value is either non-numeric or the value is out of range.	Check the configuration file.
Gwd-11254-24: invalid connect attempt-interval [s]	The specified <connect> attempt-interval value is either non-numeric or the value is out of range.	Check the configuration file.
Gwd-11254-25: invalid connect max-attempts [s]	The specified <connect> max-attempts value is either non-numeric or the value is out of range.	Check the configuration file.
Gwd-11254-26: max-datagram value (s) exceeds limit (d)	The max-datagram value in the peer configuration exceeds the limit of 65500.	Adjust the configuration to use values within the limit.
Gwd-11254-2: port value [s] out of range	Element <port> in <udp> is out of range.	Check the configuration file.
Gwd-11254-3: receive-buffer must not be blank	Element <receive-buffer> in <udp> must contain a valid number.	Check the configuration file.
Gwd-11254-4: receive-buffer value [s] is invalid	Element <receive-buffer> in <udp> contains an invalid value.	Check the configuration file.
Gwd-11254-5: send-buffer must not be blank	Element <send-buffer> in <udp> must contain a valid number.	Check the configuration file.
Gwd-11254-6: send-buffer value [s] is invalid	Element <send-buffer> in <udp> contains an invalid value.	Check the configuration file.

Gwd-11254-7: multiple-receive-max-datagrams must not be blank	Element <multiple-receive-max-datagrams> in <udp> must contain a valid number.	Check the configuration file.
Gwd-11254-8: multiple-receive-max-datagrams value [s] is invalid	Element <multiple-receive-max-datagrams> in <udp> contains an invalid value.	Check the configuration file.
Gwd-11254-901: failed to create UDP Peer message parser [d]: s	The UDP Peer failed to create a UDP message parser. This is usually an internal error. The DRO will make additional connection attempts.	Note the LBM Error message. Call support if additional help is needed.
Gwd-11254-902: failed to create UDP Peer Receive Handler [d]: s	The UDP Peer failed to create a UDP Receive Handler. The DRO will make additional connection attempts.	Note the LBM Error message. Call support if additional help is needed.
Gwd-11254-903: failed to create UDP Peer Source Handler [d]: s	The UDP Peer failed to create a UDP Source Handler. The DRO will make additional connection attempts.	Note the LBM Error message. Call support if additional help is needed.
Gwd-11254-904: failed to register the UDP Peer file descriptor [d]: s	The UDP Peer failed to register the UDP file descriptor. This is usually an internal error. The DRO will make additional connection attempts.	Note the LBM Error message. Call support if additional help is needed.
Gwd-11254-9: coalesce-threshold must not be blank	Element <coalesce-threshold> in <udp> must contain a valid number.	Check the configuration file.
Gwd-5688-4813: could not allocate u bytes [s:d]	The system was not able to allocate the amount of memory requested.	If the amount requested was particularly large, the problem may be a misconfiguration; however if the amount requested was relatively small, the physical memory on the machine may be over committed; try moving some applications to another machine.
Gwd-5975-1: error in PCRE pattern offset d: s	UMS detected a malformed PCRE expression while handling a wildcard receiver pattern.	Contact Informatica support if this message occurs frequently or if topic resolution appears to be failing.
Gwd-5975-2: illegal regex: s	UMS detected a malformed RE↩GEX expression while handling a wildcard receiver pattern.	Contact Informatica support if this message occurs frequently or if topic resolution appears to be failing.
Gwd-5975-3: peer portal [s] failed to create control buffer (send EOS) [d]: s	Failed to create a control buffer needed to indicate EOS across the Peer link.	Failure to create buffers usually indicates a serious memory issue. Configuration settings may be causing excessive memory allocation.
Gwd-5975-4: tnwg_peer_↩propagate_cb: portal [s] failed to create buffer [d]: s	Failed to create a control buffer needed to propagate route information through the Peer link.	Failure to create buffers usually indicates a serious memory issue. Configuration settings may be causing excessive memory allocation.
Gwd-5975-5: peer portal [s] failed to schedule recalc timer [d]: s	An error occurred while attempting to schedule an internal timer.	Contact Informatica Support

Gwd-5975-6: peer portal [s] failed to create raw buffer (send fragment) [d]: s	Failed to create a control buffer needed to propagate MIM traffic through the Peer link.	Failure to create buffers usually indicates a serious memory issue. Configuration settings may be causing excessive memory allocation.
Gwd-5975-7: peer portal [s] failed to schedule peer shutdown timer [d]: s	An error occurred while attempting to schedule an internal timer.	Contact Informatica Support
Gwd-5975-8: TMgr [s] sourcemap size of zero is not allowed, using default (d).	The sourcemap size config option can not be zero. Setting it to the default.	User should update their configuration file.
Gwd-5975-9: TMgr [s] sourcemap size must be a power of two, adjusting size from d to d	The sourcemap size config option must be a power of two. Setting it to the next highest power of two.	User should update their configuration file.
Gwd-6033-353: endpoint portal [s] received one or more UIM control messages with no stream information - these will be dropped	This gateway has received messages from a client using an earlier version of the library that does not include stream information.	If this is expected behavior, this message can be ignored; otherwise the client should have its library upgraded.
Gwd-6033-367: endpoint portal [s] source context **lbm_context_↩process_events()** failed [d]: s	The call to **lbm_context_↩process_events()** for the source context has returned an error. The LBM error number and message has been supplied in the output.	Use the LBM error number and message as a cross reference to determine cause and resolution.
Gwd-6033-368: endpoint portal [s] receive context **lbm_context↩_process_events()** failed [d]: s	The call to **lbm_context_↩process_events()** for the receive context has returned an error. The LBM error number and message has been supplied in the output.	Use the LBM error number and message as a cross reference to determine cause and resolution.
Gwd-6033-593: peer portal [s] received one or more UIM control messages with no stream information - these will be dropped	This gateway has received messages from a client using an earlier version of the library that does not include stream information.	If this is expected behavior, this message can be ignored; otherwise the client should have its library upgraded.
Gwd-6033-618: peer portal [s] s	A Peer connection error occurred. The error message has been supplied in the output.	Use the error message as a cross reference to determine cause and resolution.
Gwd-6259-50: Message received with no routing information; dropping. Topic (s) Source (s)	A message was received by a Gateway that contains no routing information and therefore was dropped.	This is likely due to a version mismatch. The Topic and Source string are given in the message.
Gwd-6259-51: Message received with unusually high hop count (d). Topic (s) Source (s)	A message was received by a Gateway that contains a high hop count (given in message).	The customer needs to evaluate their network topology.
Gwd-6259-52: Control message received with no routing information; dropping. Origin: s:d	A control message was received by a Gateway that contains no routing information and therefore was dropped.	This is likely due to a version mismatch. The origin is given in the message.
Gwd-6259-53: Control message received with unusually high hop count (d). Origin: s:d	A message was received by a Gateway that contains a high hop count (given in message).	The customer needs to evaluate their network topology.
Gwd-6259-54: endpoint portal [s] failed to send unicast [d]: s to u↩:s:d	A failure occured trying to send a unicast message.	This failure is usually a result of not being able to connect to the destination or an unexpected disconnect which could indicate network issues. The specific LBM error message is given.

Gwd-6259-55: Message received with too many hops (255); dropping . Topic (s) Source (s)	A message was received by a Gateway that contains a high hop count (given in message).	The customer needs to evaluate their network topology.
Gwd-6259-56: Control message received with too many hops (255); dropping . Origin: s:d	A message was received by a Gateway that contains a high hop count (given in message).	The customer needs to evaluate their network topology.
Gwd-6259-57: endpoint portal [s] failed to create buffer (send topic control packet) [d]: s	When forwarding Topic Control Data, a buffer could not be allocated.	This is an LBM buffer create error. The LBM error number and message is given. Please cross reference this information.
Gwd-6259-58: endpoint portal [s] failed to send raw (send topic control packet) [d]: s	An error occurred while attempting to send a message fragment.	This is an LBM send error. The L↩BM error number and message is given. Please cross reference this information.
Gwd-6259-59: tnwg_peer_psm_↩deliver_uim_packet_cb: portal [s] failed to create buffer [d]: s	Failed to create a control buffer needed to send UIM across the Peer link.	Failure to create buffers usually indicates a serious memory issue. Configuration settings may be causing excessive memory allocation.
Gwd-6259-60: tnwg_peer_psm_↩deliver_cntl_packet_cb: portal [s] failed to create buffer [d]: s	Failed to create a control buffer needed to send UIM across the Peer link.	Failure to create buffers usually indicates a serious memory issue. Configuration settings may be causing excessive memory allocation.
Gwd-6361-100: failed to schedule the source delete timer: s	An error occurred while attempting to schedule an internal timer.	Contact Informatica Support.
Gwd-6361-101: Unable to enqueue a source entry onto the blocked queue: s	An error occurred while attempting to enqueue data on to an internal queue.	Contact Informatica Support.
Gwd-6361-102: Unable to enqueue a source entry onto the wakeup queue: s	An error occurred while attempting to enqueue data on to an internal queue.	Contact Informatica Support.
Gwd-6361-103: An error occurred while processing a source notification: s	An error occurred while attempting to process a source create/delete notification.	Contact Informatica Support.
Gwd-6361-104: An error occurred while attempting to create a source on topic [s]	An error occurred while creating a proxy source. No data will be forwarded for that source.	Look for a prior error in the gateway log indicating what may have gone wrong.
Gwd-6361-105: Unable to enqueue a source entry onto the delete queue: s	An error occurred while attempting to enqueue data on to an internal queue.	Contact Informatica Support.
Gwd-6361-106: psm p failed to create sqn set [d]: s	An error occurred while attempting to create a sqn set, used for duplicate detection.	Contact Informatica Support.
Gwd-6361-10: endpoint portal [s] remote domain topic interest check failed [d]: s	An error occurred while checking topic interest from remote domains.	Contact Informatica Support
Gwd-6361-111: an error occurred while processing link state information from another gateway: s	An error occurred while processing an incoming route information packet.	Contact Informatica Support.
Gwd-6361-112: unable to set pdm field [node_name] for link state propagation: [s]	An error occurred while setting P↩DM field in an internal PDM message.	Contact Informatica Support.
Gwd-6361-116: failed to create an internal domain list: s	An error occurred while creating an internal domain list.	Contact Informatica Support.

Gwd-6361-117: unable to read pdm field [s]: [s]	An error occurred while reading a PDM field in a PDM message.	Contact Informatica Support.
Gwd-6361-118: unable to read pdm field vec [s]: [s]	An error occurred while reading a PDM field vec in a PDM message.	Contact Informatica Support.
Gwd-6361-119: unable to set pdm field [s] for link state forwarding: [s]	An error occurred while setting a PDM field in a PDM message.	Contact Informatica Support.
Gwd-6361-11: endpoint portal [s] failed to schedule remote domain topic check timer [d]: s	An error occurred while attempting to schedule an internal timer.	Contact Informatica Support
Gwd-6361-123: portal [s] could not find path to domain u. Dropping UIM packet.	UIM traffic destined for a particular domain arrived at a portal that is not setup to forward to the domain in question.	Contact Informatica Support.
Gwd-6361-124: Received UIM packet before initial route calculations completed. Dropping.	UIM traffic was sent to the gateway before it had completed it's first round of route calculations.	This can happen briefly when a gateway is restarted. If the message persists, contact Informatica Support.
Gwd-6361-12: endpoint portal [s] remote domain PCRE pattern interest check failed [d]: s	An error occurred while checking pattern interest from remote domains.	Contact Informatica Support
Gwd-6361-132: endpoint portal [s] failed to schedule rcv_ctx recalc timer [d]: s	An error occurred while attempting to schedule an internal timer.	Contact Informatica Support
Gwd-6361-133: Received MIM packet with no odomain header. Dropping.	MIM traffic was sent to the gateway without an ODOMAIN header.	This is likely caused by running an older version of UM.
Gwd-6361-134: Received MIM packet with no odomain header. Dropping.	MIM traffic was sent to the gateway without an ODOMAIN header.	This is likely caused by a gateway version mismatch.
Gwd-6361-13: endpoint portal [s] remote domain REGEX pattern interest check failed [d]: s	An error occurred while checking pattern interest from remote domains.	Contact Informatica Support
Gwd-6361-14: endpoint portal [s] failed to schedule remote domain pattern check timer [d]: s	An error occurred while attempting to schedule an internal timer.	Contact Informatica Support
Gwd-6361-15: endpoint portal [s] failed to dup rcv attributes (rcv create) [d]: s	An error occurred while attempting to duplicate receiver attributes during receiver creation.	Contact Informatica Support
Gwd-6361-16: endpoint portal [s] failed to set rcv attribute [source↩ _notification_function] (rcv create) [d]: s	An error occurred while attempting to set receiver attributes during receiver creation.	Contact Informatica Support
Gwd-6361-17: endpoint portal [s] failed to lookup topic (rcv create) [d]: s	An error occurred while attempting to lookup a topic during receiver creation.	Contact Informatica Support
Gwd-6361-18: endpoint portal [s] failed to create receiver (rcv create) [d]: s	An error occurred while attempting to create a receiver.	Contact Informatica Support
Gwd-6361-19: endpoint portal [s] failed to alloc resolver topic message [d]: s	UM has failed to allocate required memory for the purposes of constructing an interest list message.	Acquire more memory
Gwd-6361-20: endpoint portal [s] failed to delete receiver (rcv delete) [d]: s	An error occurred while attempting to delete a receiver.	Contact Informatica Support

Gwd-6361-21: endpoint portal [s] failed to dup wrcv attributes (wrcv create) [d]: s	An error occurred while attempting to duplicate wildcard receiver attributes during wildcard receiver creation.	Contact Informatica Support
Gwd-6361-22: endpoint portal [s] failed to set wrcv attribute [receiver_create_callback] (wrcv create) [d]: s	An error occurred while attempting to set wildcard receiver attributes during receiver creation.	Contact Informatica Support
Gwd-6361-23: endpoint portal [s] failed to set wrcv attribute [receiver_delete_callback] (wrcv create) [d]: s	An error occurred while attempting to set wildcard receiver attributes during receiver creation.	Contact Informatica Support
Gwd-6361-24: endpoint portal [s] failed to set wrcv attribute [pattern_type] (wrcv create) [d]: s	An error occurred while attempting to set wildcard receiver attributes during receiver creation.	Contact Informatica Support
Gwd-6361-25: endpoint portal [s] failed to create wildcard receiver (wrcv create) [d]: s	An error occurred while attempting to create a wildcard receiver.	Contact Informatica Support
Gwd-6361-26: endpoint portal [s] failed to delete wildcard receiver (wrcv delete) [d]: s	An error occurred while attempting to delete a wildcard receiver.	Contact Informatica Support
Gwd-6361-27: endpoint portal [s] failed to properly handle wildcard receiver receiver create [d]: s	An error occurred while attempting to process a wildcard receiver receiver create.	Contact Informatica Support
Gwd-6361-28: endpoint portal [s] failed to properly handle wildcard receiver receiver delete [d]: s	An error occurred while attempting to process a wildcard receiver receiver delete.	Contact Informatica Support
Gwd-6361-29: endpoint portal [s] received TransportOpts with no O↩ TID for SourceName [s] topic [s], source ignored (rcvdc create)	UM encountered a source with no OTID. This is likely caused by a version mismatch with an old versin of UM.	Resolve the version mismatch.
Gwd-6361-30: endpoint portal [s] failed to create prm o_entry (rcvdc_create) [d]: [s]	An error occurred while attempting to process a delivery controller create.	Contact Informatica Support
Gwd-6361-31: endpoint portal [s] unable to delete NULL src_clientd (rcvdc_delete)	UM encountered an unexpected NULL source clientd while attempting to handle a delivery controller delete.	Contact Informatica Support
Gwd-6361-32: endpoint portal [s] failed to properly handle a delivery controller delete [d]: s	An error occurred while attempting to process a delivery controller delete.	Contact Informatica Support
Gwd-6361-33: endpoint portal [s] received advertisement for topic [s] source [s] with no transport options - this source will never be forwarded	UM encountered a source with no transport opts. This is likely caused by a version mismatch with an old version of UM.	Resolve the version mismatch.
Gwd-6361-34: endpoint portal [s] received advertisement for topic [s] source [s] with no OTID - this source will never be forwarded	UM encountered a source with no OTID. This is likely caused by a version mismatch with an old version of UM.	Resolve the version mismatch.
Gwd-6361-35: endpoint portal [s] failed to schedule src_ctx recalc timer [d]: s	An error occurred while attempting to schedule an internal timer.	Contact Informatica Support
Gwd-6361-36: endpoint portal [s] failed to duplicate src attr (src create) [d]: s	An error occurred while attempting to duplicate source attributes during source creation.	Contact Informatica Support

Gwd-6361-37: endpoint portal [s] failed to allocate source topic (src create) [d]: s	An error occurred while attempting to allocate a topic during source creation.	Contact Informatica Support
Gwd-6361-38: endpoint portal [s] failed to create source (src create) [d]: s	An error occurred while attempting to create a source.	Contact Informatica Support
Gwd-6361-39: endpoint portal [s] failed to flush source (src delete) [d]: s	An error occurred while attempting to flush a source prior to source deletion.	Contact Informatica Support
Gwd-6361-40: endpoint portal [s] failed to delete source (src delete) [d]: s	An error occurred while attempting to delete a source.	Contact Informatica Support
Gwd-6361-41: endpoint portal [s] failed to create raw buffer (send fragment) [d]: s	An error occurred while attempting to create a message buffer for sending.	Contact Informatica Support
Gwd-6361-42: endpoint portal [s] unable to send: datagram size mismatch. transport_XXX_↩ datagram_max_size must be properly configured. This is a configuration error.	Attempting to send a fragment that is larger than this egress portal's max size.	Resolve the datagram max size mismatch
Gwd-6361-43: endpoint portal [s] failed to send raw (send fragment) [d]: s	An error occurred while attempting to send a message fragment.	Contact Informatica Support
Gwd-6361-44: endpoint portal [s] failed to create raw buffer (IM) (send fragment) [d]: s	An error occurred while attempting to create a message buffer for sending.	Contact Informatica Support
Gwd-6361-45: endpoint portal [s] unable to multicast immediate↩ : datagram size mismatch. transport_lbtrm_datagram_max_↩ size must be properly configured. This is a configuration error.	Attempting to send a fragment that is larger than this egress portal's max size.	Resolve the datagram max size mismatch
Gwd-6361-46: endpoint portal [s] failed to multicast immediate raw (send fragment) [d]: s	An error occurred while attempting to send a message fragment.	Contact Informatica Support
Gwd-6361-47: endpoint portal [s] failed to handle topic/pattern leave entry [d]: [s]	An error occurred while attempting to process local interest.	Contact Informatica Support
Gwd-6361-48: endpoint portal [s] failed to handle pattern interest entry [d]: [s]	An error occurred while attempting to process remote interest.	Contact Informatica Support
Gwd-6361-49: endpoint portal [s] failed to enqueue topic interest entry [d]: [s]	An error occurred while attempting to process remote interest.	Contact Informatica Support
Gwd-6361-50: endpoint portal [s] failed to allocate resolver buffer [d]: s	An error occurred while attempting to allocate a topic resolution buffer.	Contact Informatica Support
Gwd-6361-51: endpoint portal [s] failed to generate portal list (topic res req) [d]: s	An error occurred while attempting to generate a list of portals.	Contact Informatica Support
Gwd-6361-52: endpoint portal [s] failed to allocate resolver buffer [d]: s	An error occurred while attempting to allocate a topic resolution buffer.	Contact Informatica Support
Gwd-6361-56: rm failed to join ctx thread, s	UM was unable to join an internal thread.	Contact Informatica Support.

Gwd-6361-57: rm failed to join evq thread, s	UM was unable to join an internal thread.	Contact Informatica Support.
Gwd-6361-5: endpoint portal [s] failed to schedule remote domain topic check timer [d]: s	An error occurred while attempting to schedule an internal timer.	Contact Informatica Support
Gwd-6361-61: overriding 'interest' based route decisions on portal d	Route decisions are now overriden regarding whether or not to propagate interest on the specified portal.	Don't set the TNWG_PORTAL_R↩OUTE_OVERRIDE env variable.
Gwd-6361-62: overriding 'receiver' based route decisions on portal d	Route decisions are now overriden regarding whether or not to create a receiver on the specified portal.	Don't set the TNWG_PORTAL_R↩OUTE_OVERRIDE env variable.
Gwd-6361-63: overriding 'source' based route decisions on portal d	Route decisions are now overriden regarding whether or not to propagate sources on the specified portal.	Don't set the TNWG_PORTAL_R↩OUTE_OVERRIDE env variable.
Gwd-6361-67: portal [s] failed to join psm evq thread, s	UM has failed to join an event queue dispatch thread.	Contact Informatica Support.
Gwd-6361-69: portal [s] psm evq **lbm_event_dispatch()** failed, s	An error occurred while attempting to process events off an internal event queue.	Contact Informatica Support.
Gwd-6361-6: endpoint portal [s] failed to schedule remote domain topic check timer [d]: s	An error occurred while attempting to schedule an internal timer.	Contact Informatica Support
Gwd-6361-71: portal [s] failed to join prm evq thread, s	UM has failed to join an internal event queue dispatch thread.	Contact Informatica Support.
Gwd-6361-72: TNWG PRM processing failed [d]: s	An error occurred while attempting to process an internal interest notification.	Contact Informatica Support.
Gwd-6361-73: portal [s] prm evq **lbm_event_dispatch()** failed, s	An error occurred while attempting to process events off an internal event queue.	Contact Informatica Support.
Gwd-6361-74: route recalculation took u.%06u seconds	Running route recalculations took the indicated amount of time to complete.	Nothing. This is purely informational.
Gwd-6361-75: route recalculation backoff has exceeded the specified threshold	Your network topology has failed to converge within the specified threshold.	Attempt to identify the gateway or peer link that is causing the instability in your topology.
Gwd-6361-77: loop count == d	You're running a build of the gateway with TNWG_RM_LOOP_CO↩UNT defined in tnwgrm.c.	Contact Informatica Support
Gwd-6361-78: rm evq **lbm_↩event_dispatch()** failed, s	An error occurred while attempting to process events off an internal event queue.	Contact Informatica Support
Gwd-6361-79: rm ctx **lbm_↩context_process_events()** failed, s	An error occurred while attempting to process events on an internal context.	Contact Informatica Support
Gwd-6361-7: endpoint portal [s] failed to schedule remote domain pattern check timer [d]: s	An error occurred while attempting to schedule an internal timer.	Contact Informatica Support
Gwd-6361-81: TNWG PRM domain processing failed [d]: s	An error occurred while attempting to process an internal domain notification.	Contact Informatica Support.
Gwd-6361-84: unable to parse link state buffer	An error occurred while deserializing an incoming link state packet.	Contact Informatica Support.

Gwd-6361-85: unable to read pdm field [node_name] for link state forwarding: [s]	An error occurred while reading a field in an internal PDM message.	Contact Informatica Support.
Gwd-6361-86: unable to create neighbor asl: s	UM was unable to create an internal data structure.	Contact Informatica Support.
Gwd-6361-87: unable to set pdm field [s] for link state propagation: [s]	An error occurred while setting P↩ DM field in an internal PDM message.	Contact Informatica Support.
Gwd-6361-88: unable to set pdm field vec [s] for link state propagation: [s]	An error occurred while setting P↩ DM field vec in an internal PDM message.	Contact Informatica Support.
Gwd-6361-89: unable to create pdm message for link state propagation: [s]	An error occurred while creating internal PDM message.	Contact Informatica Support.
Gwd-6361-8: endpoint portal [s] failed to schedule remote domain pattern check timer [d]: s	An error occurred while attempting to schedule an internal timer.	Contact Informatica Support
Gwd-6361-91: route recalculation is taking longer than the route info propagation interval	Running route recalculations took longer than the specified route info propagation interval.	Adjust appropriate configuration options
Gwd-6361-93: shortest path from u to u not found	Unable to find an expected internal data structure.	Contact Informatica Support.
Gwd-6361-94: failed to add node [u] to an internal domain list: s	An error occurred while creating an internal domain list.	Contact Informatica Support.
Gwd-6361-97: psm p failed to propagate a message [d]: s	An error occurred while attempting to forward a message.	Contact Informatica Support.
Gwd-6361-98: Unable to enqueue a source entry onto the wakeup queue: s	An error occurred while attempting to enqueue data on to an internal queue.	Contact Informatica Support.
Gwd-6361-99: Unable to enqueue a source wakeup event on to an event queue: s	An error occurred while attempting to enqueue a wakeup event on to an internal event queue.	Contact Informatica Support.
Gwd-6361-9: endpoint portal [s] remote domain s check ivl dropped below threshold of d. Reseting to d	Desired configuration for the interest timeout threshold in conjunction with the current number of symbols has caused UM to calculate a check interval lower than the threshold of 50 milliseconds.	Adjust the appropriate configuration parameters to check each symbol less often.
Gwd-6814-10: invalid ingress-cost value [s]	The specified value is either non-numeric or the value is out of range.	Please specify a valid value.
Gwd-6814-11: egress-cost must not be blank	Must specify a valid numeric value.	
Gwd-6814-12: invalid egress-cost value [s]	The specified value is either non-numeric or the value is out of range.	Please specify a valid value.
Gwd-6814-13: source-deletion-delay must not be blank	Must specify a valid numeric value.	
Gwd-6814-14: invalid source-deletion-delay value [s]	The specified value is either non-numeric or the value is out of range.	Please specify a valid value.
Gwd-6814-15: The late-join element has been deprecated and will be ignored	The specified element has been deprecated.	Remove the element from the config file.
Gwd-6814-16: The topic-purge element has been deprecated and will be ignored	The specified element has been deprecated.	Remove the element from the config file.

Gwd-6814-17: The topic-interest-generate element has been deprecated and will be ignored	The specified element has been deprecated.	Remove the element from the config file.
Gwd-6814-18: The topic-domain-activity element has been deprecated and will be ignored	The specified element has been deprecated.	Remove the element from the config file.
Gwd-6814-19: The pattern-purge element has been deprecated and will be ignored	The specified element has been deprecated.	Remove the element from the config file.
Gwd-6814-20: The pattern-interest-generate element has been deprecated and will be ignored	The specified element has been deprecated.	Remove the element from the config file.
Gwd-6814-21: The pattern-domain-activity element has been deprecated and will be ignored	The specified element has been deprecated.	Remove the element from the config file.
Gwd-6814-22: size value [s] for sourcemap is invalid	The specified value is either non-numeric or the value is out of range.	Please specify a valid value.
Gwd-6814-23: check interval value [s] for remote-topic is invalid	The specified value is either non-numeric or the value is out of range.	Please specify a valid value.
Gwd-6814-24: max topics value [s] for remote-topic is invalid	The specified value is either non-numeric or the value is out of range.	Please specify a valid value.
Gwd-6814-25: timeout value [s] for remote-topic is invalid	The specified value is either non-numeric or the value is out of range.	Please specify a valid value.
Gwd-6814-26: check interval value [s] for remote-pattern is invalid	The specified value is either non-numeric or the value is out of range.	Please specify a valid value.
Gwd-6814-27: max patterns value [s] for remote-pattern is invalid	The specified value is either non-numeric or the value is out of range.	Please specify a valid value.
Gwd-6814-28: timeout value [s] for remote-pattern is invalid	The specified value is either non-numeric or the value is out of range.	Please specify a valid value.
Gwd-6814-29: The topic-use-check element has been deprecated and will be ignored	The specified element has been deprecated.	Remove the element from the config file.
Gwd-6814-30: The pattern-use-check element has been deprecated and will be ignored	The specified element has been deprecated.	Remove the element from the config file.
Gwd-6814-3: invalid min-interval value [s]	The specified value is either non-numeric or the value is out of range.	Please specify a valid value.
Gwd-6814-4: invalid max-interval value [s]	The specified value is either non-numeric or the value is out of range.	Please specify a valid value.
Gwd-6814-5: invalid min-interval value [s]	The specified value is either non-numeric or the value is out of range.	Please specify a valid value.
Gwd-6814-6: invalid max-interval value [s]	The specified value is either non-numeric or the value is out of range.	Please specify a valid value.
Gwd-6814-7: invalid min-interval value [s]	The specified value is either non-numeric or the value is out of range.	Please specify a valid value.
Gwd-6814-8: invalid max-interval value [s]	The specified value is either non-numeric or the value is out of range.	Please specify a valid value.
Gwd-6814-9: ingress-cost must not be blank	Must specify a valid numeric value.	
Gwd-6873-1: endpoint portal [s] failed to allocate resolver buffer [d]: s	An error occurred while attempting to allocate a topic resolution buffer.	Contact Informatica Support

Gwd-6945-1: Portal [s] began enqueueing data	The named portal began enqueueing data due to LBM_EWOULDB↩ LOCK.	This is an informational message only. The message traffic is higher than can be handled. Check config or network load.
Gwd-6945-2: Portal [s] dropping data due to high volume	The named portal is dropping data. This is due to the message queue being full or disabled. Message is throttled and code may be dropping at a higher rate than indicated by log message. Check Web Monitor stats.	This is an informational message only. The message traffic is higher than can be handled. Check config or network load.
Gwd-6945-3: Portal [s] completed flushing queue	The named portal completed dequeueing the data previoused enqueued.	This is an informational message only. The message traffic has slowed so that the queue could be emptied.
Gwd-7079-5: unable to create route manager [d]: s	An error occurred while attempting to create an internal component.	Contact Informatica Support.
Gwd-7097-1: peer portal [s] has just established a connection to gateway named: [s] with node id: u	A peer connection has just been established to the specified gateway.	
Gwd-7097-3: peer portal [s] failed to properly connect to gateway with node id: u [d]: s	The gateway failed to establish a logical connection to the gateway at the other end of the peer link. The link will remain up, but no traffic will flow.	This is usually caused by having more than one peer connection to the same gateway, which is an unsupported configuration.
Gwd-7097-4: peer portal [s] failed to properly connect to gateway named: [s] with node id: u [d]: s	The gateway failed to establish a logical connection to the gateway at the other end of the peer link. The link will remain up, but no traffic will flow.	This is usually caused by having more than one peer connection to the same gateway, which is an unsupported configuration.
Gwd-7122-1: Gateway named [s] with node id: u has started.	Your gateway has just started.	
Gwd-7136-1: Ultra Messaging Gateway version s	Printed at startup.	
Gwd-7136-2: s	Printed at startup.	
Gwd-7136-3: EXPERIMENTAL BUILD - NOT FOR PRODUCTION USE	Printed at startup.	
Gwd-7155-1: Gateways can not have more than d portals	The gateway had too many portals specified.	Specify fewer portals.
Gwd-8239-1: peer portal [s] failed to enqueue connect abort [d]: s	An error occurred while handling a peer connection failure.	Contact Informatica Support
Gwd-8851-1: datagram max size mismatch max_datagram_size[d] msg buffer length [d] - Dropping message.	A message is larger than the configured maximum datagram size for the outgoing port.	This implies that there is a datagram max size configuration error with in the system. All max_↩ datagram_size settings must be set to the same value through out the entire system.
Gwd-8851-2: datagram max size mismatch max_datagram_size[d] msg buffer length [d] - Dropping message.	A message is larger than the configured maximum datagram size for the outgoing port.	This implies that there is a datagram max size configuration error with in the system. All max_↩ datagram_size settings must be set to the same value through out the entire system.

Gwd-8955-8: failed to join logging thread during shutdown error=i	Attempt to shutdown logging thread failed	Contact support, this should not happen and may be the result of corruption
Gwd-9175-10: failed to register FD read callback [d]: s	An error occurred attempting to register the FD read callback.	The error message includes the error number and text pertaining to the specific error.
Gwd-9175-11: failed to register FD write callback [d]: s	An error occurred attempting to register the FD write callback.	The error message includes the error number and text pertaining to the specific error.
Gwd-9175-12: failed to create send queue [d]: s	An error occurred attempting to create the send queue.	The error message includes the error number and text pertaining to the specific error.
Gwd-9175-13: failed to create batcher [d]: s	An error occurred attempting to create the send batcher.	The error message includes the error number and text pertaining to the specific error.
Gwd-9175-14: failed to cancel receive timer [d]: s	An error occurred attempting to cancel the receive timer.	The error message includes the error number and text pertaining to the specific error.
Gwd-9175-15: failed to create send queue [d]: s	An error occurred attempting to create the send queue.	The error message includes the error number and text pertaining to the specific error.
Gwd-9175-16: failed to create batcher [d]: s	An error occurred attempting to create the send batcher.	The error message includes the error number and text pertaining to the specific error.
Gwd-9175-17: connected to [s:u]	The DRO has connected to a peer portal.	No action required.
Gwd-9175-18: error on send [d]: s	Error sending.	The error message includes the error number and text pertaining to the specific error.
Gwd-9175-19: error on send [d]: s	Error sending.	The error message includes the error number and text pertaining to the specific error.
Gwd-9175-1: lbm_implicit_↩ batcher_send failed [d]: s	An attempt to send batched messages has failed.	The error message includes the error number and text pertaining to the specific error.
Gwd-9175-20: error enqueuing message [d]: s	An error occurred enqueuing a message to be sent.	The error message includes the error number and text pertaining to the specific error.
Gwd-9175-21: failed to create peer accept socket [d]: s	Failure creating peer accept socket.	The error message includes the error number and text pertaining to the specific error.
Gwd-9175-22: failed to register FD accept callback [d]: s	Failure registering th FD accept callback.	The error message includes the error number and text pertaining to the specific error.
Gwd-9175-23: lbm_implicit_↩ batcher_send failed [d]: s	An error occured sending batched messages.	The error message includes the error number and text pertaining to the specific error.
Gwd-9175-24: failed to accept connection (accept) [d]: s	An error occurred accepting a connection.	The error message includes the error number and text pertaining to the specific error.
Gwd-9175-25: failed to create send queue [d]: s	An error occurred attempting to create the send queue.	The error message includes the error number and text pertaining to the specific error.

Gwd-9175-26: failed to create batcher [d]: s	An error occurred attempting to create the send batcher.	The error message includes the error number and text pertaining to the specific error.
Gwd-9175-27: failed to register FD read callback [d]: s	An error occurred attempting to register the FD read callback.	The error message includes the error number and text pertaining to the specific error.
Gwd-9175-28: failed to register FD write callback [d]: s	An error occurred attempting to register the FD write callback.	The error message includes the error number and text pertaining to the specific error.
Gwd-9175-29: error on socket receive [d]: s	An error occurred reading the socket	The error message includes the error number and text pertaining to the specific error.
Gwd-9175-2: error on socket receive [d]: s	An error occurred reading the socket	The error message includes the error number and text pertaining to the specific error.
Gwd-9175-30: error on socket receive [d]: s	An error occurred reading the socket	The error message includes the error number and text pertaining to the specific error.
Gwd-9175-31: detected dropped connection (zero-len read)	Connection Closed due to a zero byte read.	Ensure the peer DRO is running
Gwd-9175-32: received connection from [s:u]	Received new connection	No action required
Gwd-9175-34: error on send [d]: s	Error sending.	The error message includes the error number and text pertaining to the specific error.
Gwd-9175-35: error on send [d]: s	Error sending.	The error message includes the error number and text pertaining to the specific error.
Gwd-9175-36: error enqueuing message [d]: s	An error occurred enqueuing a message to be sent.	The error message includes the error number and text pertaining to the specific error.
Gwd-9175-37: failed to cancel s FD ALL event [d]: s	An error canceling all events for an FD.	The error message includes the error number and text pertaining to the specific error.
Gwd-9175-38: failed to cancel FD WRITE event [d]: s	An occurred canceling the FD write event.	The error message includes the error number and text pertaining to the specific error.
Gwd-9175-39: failed to register FD write callback [d]: s	An error occurred attempting to register the FD write callback.	The error message includes the error number and text pertaining to the specific error.
Gwd-9175-3: error on socket receive [d]: s	An error occurred reading the socket	The error message includes the error number and text pertaining to the specific error.
Gwd-9175-40: connection destroyed due to shutdown	Connection removed during shutdown	No action required.
Gwd-9175-41: failed to connect to peer at [s:u] via [s]	An attempt to connect to a peer failed.	This message indicates that a configured peer is not responding. Check that the peer is operational.
Gwd-9175-42: connection destroyed due to socket failure	The connection to a peer due to a socket error.	
Gwd-9175-43: lost connection to peer at [s:u] via [s]	The stated peer is no longer connected.	This message indicates that a configured peer is not responding. Check that the peer is operational.

Gwd-9175-44: lost connection with peer at [s:u] via [s]	The stated peer is no longer connected.	This message indicates that a configured peer is not responding. Check that the peer is operational.
Gwd-9175-4: failed to schedule socket connect [d]: s	The attempt to schedule the socket connect timer failed.	The error message includes the error number and text pertaining to the specific error.
Gwd-9175-5: failed to cancel connect timer [d]: s	The attempt to cancel the socket connect timer failed.	The error message includes the error number and text pertaining to the specific error.
Gwd-9175-6: failed to connect to peer at [s:u] via [s] [d]: s	An error occurred connecting to the peer.	The error message includes the error number and text pertaining to the specific error.
Gwd-9175-7: failed to register FD connect callback [d]: s	An error occurred attempting to register the FD connect callback.	The error message includes the error number and text pertaining to the specific error.
Gwd-9175-8: failed to cancel FD connect event [d]: s	An error occurred attempting to cancel the FD connect event.	The error message includes the error number and text pertaining to the specific error.
Gwd-9175-9: failed to schedule receive timer [d]: s	An error occurred attempting to register the receive timer.	The error message includes the error number and text pertaining to the specific error.
Gwd-9565-1: Attempted to negotiate protocol "%s" with peer s:d, but peer refused. Now trying protocol "%s".	The other side of a TCP connection actively refused a proposed protocol; usually this means the other application is not configured to support the protocol or is an older version that does not understand it.	Check for version or configuration mismatches.
Gwd-9565-2: Attempted to negotiate protocol "%s" with peer s:d, but peer refused. Unable to communicate with peer.	The other side of a TCP connection actively refused a proposed protocol; usually this means the other application is not configured to support the protocol or is an older version that does not understand it.	Check for version or configuration mismatches.
Gwd-9571-31: error resolving source IP ACE: s	The supplied source IP ACE could not resolve the provided IPv4 dotted-decimal address or domain name	Provide a valid name. See RFCs 952 and 1123 for DNS naming conventions.
Gwd-9571-32: error resolving multicast group ACE: s	The supplied multicast ACE could not resolve the provided IPv4 dotted-decimal address or domain name	Provide a valid name. See RFCs 952 and 1123 for DNS naming conventions.
Gwd-9574-01: RecalcTrigger:LINK CAME UP:Version = d:NodeId = u	A link has come up.	This is an information message only. An event has occured that may trigger a route table recalculation
Gwd-9574-02: RecalcTrigger:LINK WENT DOWN:Version = d:NodeId = u	A link has gone down.	This is an information message only. An event has occured that may trigger a route table recalculation
Gwd-9574-03: RecalcTrigger:FO↩ RCED RECALC:Version = d	A route recalculation was forced from the Web monitor.	This is an information message only. An event has occured that may trigger a route table recalculation
Gwd-9574-04: RecalcTrigger:NEW DRO DISCOVERED:Version = d↩ :NodeId = u:Node Name = s	A new DRO within the network has been discovered.	This is an information message only. An event has occured that may trigger a route table recalculation

Gwd-9574-05: RecalcTrigger:NO↩ DE UPDATED:Version = d:NodeId = u:Node Name = s	A DRO within the network has advertised a route change.	This is an information message only. An event has occured that may trigger a route table recalculation
Gwd-9574-06: RecalcTrigger:DRO TIMED OUT:Version = d:NodeId = u:Node name = s	A DRO within the network has not delivered a heartbeat message within the necessary interval.	This is an information message only. An event has occured that may trigger a route table recalculation
Gwd-9588-11: Negotiation timeout with peer s:d.	A Peer portal failed to complete the security/compression negotiation within a reasonable timeout.	Negotiation failures are typically a result of mis-configuration. Please check the configuration.
Gwd-9597-1: compression value [s] is invalid	The compression algorithm specified is unknown or unsupported.	Check configuration for typos and check version for support of the specified compression algorithm.
Gwd-9597-2: compression value [s] is invalid	The compression algorithm specified is unknown or unsupported.	Check configuration for typos and check version for support of the specified compression algorithm.
Gwd-9597-3: unable to allocate portal peer TLS info [d]: s	Can't allocate memory for Security.	Check memory allocator or available memory.
Gwd-9815-1: Dual Channel Peer links are no longer supported. Please re-configure using Single Channel.	Dual Channel Peer links are no longer supported.	The customer needs to update their configuration to use Single Channel Peer links instead.
Gwd-9932-01: smart-batch must not be blank	Bad configuration for smart-batch	Customer needs to check the configuration file.
Gwd-9932-02: invalid smart-batch value [s]	Bad configuration for smart-batch	Customer needs to check the configuration file.

GwdApi-10995-10: unable to initialize monitoring [d]: s	Automonitoring failed to start for the gateway.	See the log files for other errors.
GwdApi-11254-201: peer portal [s] is configured for both udp and either encryption and/or compression. This is not supported.	When using udp peer links, neither encryption nor compression is supported.	Please check the configuration.
GwdApi-5688-4702: failed to set portal source option [s] to [s]: s	The portal was unable to set a source option	
GwdApi-5688-4703: failed to set portal receiver option [s] to [s]: s	The portal was unable to set a receiver option	
GwdApi-6103-0001: failed to set portal source option [s] to [s]: s	The portal was unable to set a source option	
GwdApi-6103-0002: failed to set portal receiver option [s] to [s]: s	The portal was unable to set a receiver option	
GwdApi-6361-110: unable to create pdm definition: s	An error occurred while creating an internal PDM definition.	Contact Informatica Support.
GwdApi-6361-113: unable to add pdm field definition [s]: [s]	An error occurred while adding a PDM field to an internal PDM definition.	Contact Informatica Support.
GwdApi-6361-114: failed to create psm delete q	UM has failed to create an internal queue.	Contact Informatica Support.

GwdApi-6361-120: must not set the route recalculation backoff interval greater than the route recalculation warning interval	The backoff interval must be less than the warning interval, otherwise the warning will fire at least once for each recalculation.	Adjust the configuration.
GwdApi-6361-121: failed to propagate source creation: s	An error occurred while attempting to propagate the need to create a proxy source to another portal.	Contact Informatica Support.
GwdApi-6361-122: failed to propagate source creation: s	An error occurred while attempting to propagate the need to create a proxy source to another portal.	Contact Informatica Support.
GwdApi-6361-53: failed to create rm ctx attr: s	UM was unable to create context attributes.	Contact Informatica Support.
GwdApi-6361-54: failed to set rm context option [s] to [s]: s	UM was unable to set the specified context attributes.	Contact Informatica Support.
GwdApi-6361-55: failed to create rm ctx: s	UM was unable to create an internal reactor only context.	Contact Informatica Support.
GwdApi-6361-58: failed to create rm evq thread [d]	UM was unable to create an internal thread.	Contact Informatica Support.
GwdApi-6361-59: failed to create rm ctx thread [d]	UM was unable to create an internal thread.	Contact Informatica Support.
GwdApi-6361-60: unable to schedule rm timer	UM was unable to schedule an internal timer.	Contact Informatica Support.
GwdApi-6361-64: failed to create psm evq thread [d]	UM has failed to create an internal thread.	Contact Informatica Support.
GwdApi-6361-65: failed to create psm wakeup q	UM has failed to create an internal queue.	Contact Informatica Support.
GwdApi-6361-66: failed to create psm blocked q	UM has failed to create an internal queue.	Contact Informatica Support.
GwdApi-6361-70: failed to create prm evq thread [d]	UM has failed to create an internal event queue dispatch thread.	Contact Informatica Support.
GwdApi-6361-76: unable to schedule rm timer	An error occurred while attempting to schedule an internal timer.	Contact Informatica Support
GwdApi-6361-80: could not insert o_entry into otid_list [s:d]	An error occurred while attempting to insert a data entry into an internal data structure.	Contact Informatica Support.
GwdApi-6361-82: unable to finalize pdm definition: [s]	An error occurred while finalizing an internal PDM definition.	Contact Informatica Support.
GwdApi-6361-83: unable to create pdm message for link state forwarding: [s]	An error occurred while creating an internal PDM message.	Contact Informatica Support.
GwdApi-6361-90: the specified gateway name exceeds the max name length of d	The gateway name is too long.	Pick a shorter name.
GwdApi-6361-92: failed to propagate source creation: s	An error occurred while attempting to propagate the need to create a proxy source to another portal.	Contact Informatica Support.
GwdApi-6361-95: received a source delete for an unknown source on topic [s]	Unable to locate the source entry for the topic in question.	Contact Informatica Support.
GwdApi-6814-1: topic interest max interval must be greater than the min interval	The topic-interest min-interval must be less than the topic-interest max-interval.	Set the min/max intervals appropriately.
GwdApi-6814-2: pattern interest max interval must be greater than the min interval	The pattern-interest min-interval must be less than the topic-interest max-interval.	Set the min/max intervals appropriately.

GwdApi-7097-2: duplicate adjacent node id detected: u	A portal is adjacent to either a topic resolution domain or another gateway to which another portal on this gateway is already adjacent.	Adjust configuration so that no two portals on any gateway are adjacent to the same topic resolution domain or the same gateway.
GwdApi-7582-10: failed to get portal source transport option (s)	The portal was unable to get a source transport option.	This is an LBM error. Please refer to the given LBM error message.
GwdApi-7582-3: the DRO does not allow LBT-SMX to be the default source transport.	The DRO does not support the L↩BT-SMX source transport. This is a configuration failure and the DRO will exit.	The customer should use a different source transport when the D↩RO is configured. Please reconfigure the source transport type.
GwdApi-8955-5: callback process for logging thread must not be N↩ULL	Callback function argument for rolling logfile thread is NULL	The argument is likely corrupted; this should never happen, contact support
GwdApi-8955-6: could not allocate tl queue for logging thread	Attempt to create a queue to support the thread for rolling log files failed	Check if system resources are available such as memory or locks
GwdApi-8955-7: olog Create↩Thread: s	Could not create utility thread for rolling log files	Check if adequate system threading resources are available
GwdApi-9932-10: failed to set portal receiver context option [receive_batch_notification_↩function]: s	An error internal to LBM was encountered.	Check the LBM Error string for details of the LBM specific error.

12.5 UM Lbmrd Log Messages

Lbmrd-10492-1: Using interface [s]	A generic interface was specified for the lbmrd, the IP address it will bind to is indicated.	The message is for your information
Lbmrd-10729-1: Invalid interface [s] specified: [s]	An invalid interface configuration was specified for the lbmrd.	Specify a valid interface for the Lbmrd (using XML configuration or the -i command line option)
Lbmrd-10729-2: Error duplicating default interface string	A string duplication operation to pick a valid interface for the lbmrd failed.	Memory on the host may be over committed; try moving some applications to another machine.
Lbmrd-5466-1: LBMR Extended Type 0xx incorrect (s.d len d). [s]. Dropping.	Received a LBMR message with an unrecognized value in the extended type field.	Check if the port range of other L↩BM protocols like RU overlaps with those used by LBMR.
Lbmrd-5688-4674: LBMR Topic Query Record malformed. Dropping remainder.	UMS encountered a mismatch in the length of a received message and its headers, determining the rest of the message to be invalid. The remainder of the message is dropped.	Contact Informatica support if this message occurs frequently.
Lbmrd-5688-4675: LBMR Topic Info Record malformed. Dropping remainder.	UMS encountered a mismatch in the length of a received message and its headers, determining the rest of the message to be invalid. The remainder of the message is dropped.	Contact Informatica support if this message occurs frequently.

Lbmrd-5688-4676: LBMR error sending TIRs to (s.d len d)(s).	An error occurred forwarding the TIR packets to the clients.	This error message will contain an additional internal lbm error message which will give details of the exact problem encountered.

12.6 UM Persistent Store Log Messages

Store-10184-08: dmon evq **lbm_event_dispatch()** failed, s	An error occurred while attempting to process events off an internal event queue.	Contact Informatica Support.
Store-10184-100: failed to create dmon ctx attr: s	UM was unable to create context attributes.	Contact Informatica Support.
Store-10184-101: failed to delete dmon ctx attr: s	UM was unable to delete an internal context attributes structure. Some memory has been leaked.	Contact Informatica Support.
Store-10184-102: failed to delete dmon ctx attr: s	UM was unable to delete an internal context attributes structure. Some memory has been leaked.	Contact Informatica Support.
Store-10184-103: failed to delete src attr: s	UM was unable to delete an internal source attributes structure. Some memory has been leaked.	Contact Informatica Support.
Store-10184-104: failed to delete src: s	UM was unable to delete an internal source structure. Some memory has been leaked.	Contact Informatica Support.
Store-10184-105: failed to delete dmon ctx: s	UM was unable to delete an internal context structure. Some memory has been leaked.	Contact Informatica Support.
Store-10184-10: failed to join dmon evq thread, s	UM failed to join an internal event queue dispatch thread.	Contact Informatica Support.
Store-10184-60: WARNING: store dmon message [s] from s [s]	UM dmon received an invalid/corrupted immediate message.	Verify that messages sent on the request port are valid.
Store-10184-61: Store dmon failed to send error response [s]	UM could not respond to a dmon immediate message.	Contact Informatica Support.
Store-10184-62: Store dmon failed to send success response [s]	UM could not respond to a dmon immediate message.	Contact Informatica Support.
Store-10184-63: Store dmon received control message exceeding 255 bytes	UM daemon monitor received an invalid control message exceeding 255 bytes.	Verify that messages sent on the control channel are <= 255 bytes.
Store-10184-64: Store dmon failed to send error response [s]	UM could not respond to a dmon immediate message.	Contact Informatica Support.
Store-10184-65: Store received unknown lbm_msg_t type x [s][s]	UM daemon monitor received unknown lbm_msg_t type.	Stop the source of unknown messages to the daemon monitor.
Store-10184-70: lbmaux_context_attr_setopt_from_file: s error: s	UM was unable to set context attributes from specified file.	Verify the path to the configuration file.
Store-10184-71: failed to set dmon context option [s] to [s]: s	UM was unable to set specified daemon monitoring context attributes.	Contact Informatica Support.

Store-10184-72: lbm_src_topic_↩ attr_create: s	UM was unable to create dmon source attribute.	Contact Informatica Support.
Store-10184-73: failed to set dmon source option [s] to [s]: s	UM was unable to set specified daemon monitoring source attributes.	Contact Informatica Support.
Store-10184-74: lbm_context_↩ create: s	UM was unable to create dmon context.	Contact Informatica Support.
Store-10184-75: lbm_context_↩ create: s	UM was unable to create dmon context.	Contact Informatica Support.
Store-10184-76: lbm_context_str↩ _getopt(request_tcp_port): s	UM was unable to get request tcp port.	Contact Informatica Support.
Store-10184-77: lbm_src_topic_↩ alloc: s	UM was unable to allocate dmon publishing topic.	Contact Informatica Support.
Store-10184-78: lbm_src_create: s	UM was unable to create dmon source.	Contact Informatica Support.
Store-10184-79: Daemon monitor accepting requests on tcp port [s] publishing to topic [s]	The store has successfully completed initialization of the daemon publishing monitor.	This message for informational purposes only and can be ignored.
Store-10184-80: umestore_↩ dmon_publish: s	UM was unable to publish dmon message.	Contact Informatica Support.
Store-10190-10: lbm_context_↩ attr_str_setopt - round_robin_xsp↩ _count 0: s	Failed to turn off the xsp round robin behavior.	Check for resource exhaustion, out of memory errors, etc.
Store-10196-5: store "%s" topic "%s" repository-disk-async-buffer-length is greater than the repository-disk-file-size-limit	repository-disk-async-buffer-length is greater than the repository-disk-file-size-limit	Change repository-disk-async-buffer-length so that it is less than the repository-disk-file-size-limit
Store-10366-1: Created daemon monitor thread: id[s]	The store created the daemon monitor thread with the reported thread id.	This is for informational purposes only and can be ignored.
Store-10664-100: CPU affinity environment variable [UME_CPU_↩ AFFINITY] list failed to parse; string length exceeded d characters	The length of the CPU affinity list string used for pinning assignments exceeded the max length of 2048 characters.	Reduce the length of the CPU string and try again.
Store-10664-101: invalid process CPU affinity environment variable [UME_CPU_AFFINITY]; valid CPU numbers for this host are between 0 and d.	The CPU affinity list string must be a comma separated list of one or more positive integers in the reported CPU range.	Reformat the CPU list and try again.
Store-10664-1: Initial CPU assignment: d	The store daemon was initially assigned the reported CPU affinity.	This is for informational purposes only and can be ignored.
Store-10664-2: Failed to obtain process thread affinity errno [d]	The attempt to obtain daemon process CPU affinity failed.	More than likely the daemon process lacks the appropriate privileges to perform the operation. Enable privileges and try again.
Store-10664-3: Initial CPU process affinity mask: s	The store daemon was affinitized according to the reported CPU affinity mask ordered from lowest to highest CPU number.	This is for informational purposes only and can be ignored.
Store-10664-4: Failed to set process thread affinity errno [d]	The attempt to set daemon process CPU affinity failed.	More than likely the daemon process lacks the appropriate privileges to perform the operation. Enable privileges and try again.

Store-10664-5: Failed to obtain process thread affinity errno [d]	The attempt to obtain daemon process CPU affinity failed.	More than likely the daemon process lacks the appropriate privileges to perform the operation. Enable privileges and try again.
Store-10664-6: Updated CPU process affinity mask: s	The store daemon affinity was updated according to the reported CPU affinity mask.	This is for informational purposes only and can be ignored.
Store-10664-7: Failed to assign thread id [lu] affinity to CPU [d] error code [d]	The attempt to assign the reported CPU affinity to the reported thread ID failed.	More than likely the daemon process lacks the appropriate privileges to perform the operation. Enable privileges and try again.
Store-10664-8: Affinitized thread id [lu] to CPU [d]	The reported CPU affinity was successfully assigned to the receiving context thread.	This is for informational purposes only and can be ignored.
Store-10682-1: lbm_shutdown_↩log: WFSO res=d, GLE=d	An error was encountered while deleting the auxiliary sending thread	Check store log of other errors
Store-10682-2: Created auxiliary sending thread: id[s]	The store created the auxiliary sending thread with the reported thread id.	This is for informational purposes only and can be ignored.
Store-10690-01: Store dmon command received [s] from [s]	Store daemon monitor command received.	This is an information message only.
Store-10690-02: Store dmon command response [s]	Store daemon monitor command response.	This is an information message only.
Store-10708-1: lbm_context_↩attr_setopt - receive_batch_↩notification_function: s	Failed to enable receive_batch_↩notification_function feature.	Check for resource exhaustion, out of memory errors, etc.
Store-10761-01: s	Informational legal statement	No action is required.
Store-10805-1: lbmaux_src↩_topic_attr_setopt_from_file: s error: s	UM was unable to set context attributes from specified file.	Verify the path to the configuration file.
Store-10807-100: store [s] PREG RESP s Session ID u RegID u S↩QN[u:u]	A PREG Response is being sent to a source or receiver.	No further action is required.
Store-10888-5544: could not start automonitoring for Store "%s": s	Automonitoring failed to start for the store.	See the log files for other errors.
Store-10888-5545: could not start automonitoring for Store "%s" with Daemon Statistics enabled	Automonitoring failed to start for the store because Daemon Statistics is enabled.	Disable Daemon Statistics by removing the Daemon level <daemon-monitor> UMP Element from the store configuration.
Store-10888-701: store [s] invalid automon filter option value exceeds the maximum line length [d] for field[s]	The specified value exceeds the maximum line length.	Please specify a valid value.
Store-10888-702: store [s] invalid automon filter option value [s] for field [s]	The specified value is either non-numeric or the value is out of range.	Please specify a valid value.
Store-10888-703: store [s] invalid automon filter option value [s] for field [s]	The specified value is either non-numeric or the value is out of range.	Please specify a valid value.
Store-10888-704: store [s] invalid automon filter option enumerated value [s] for field [s]	The specified enumerated value is either non-numeric or the value is out of range.	Please specify a valid value.
Store-10888-705: store [s] invalid automon filter option value [s] for field [s] is not ld bytes in length	The specified value must be the exact number of hexadecimal bytes as the field specification.	Please specify a valid value.

Store-10888-706: store [s] invalid automon filter option value [s] for field [s] is not a hexadecimal number	The specified value must be composed of contiguous hexadecimal numbers.	Please specify a valid value.
Store-10888-707: store [s] invalid automon filter option field [s] for qualifier [s] with filter option [d]	The specified field is invalid for the specified qualifier.	Please specify a valid field.
Store-10888-708: store [s] invalid automon filter option qualifier [s] and/or field [s] name	The specified qualifier and/or field is invalid.	Please specify a valid qualifier and field.
Store-10888-711: store [s] automon numeric filter option [s] does not apply to fields of type string	The specified numeric filter option does not apply to fields of type string.	Specify a numeric compatible filter option and try again.
Store-10888-712: store [s] automon string filter option [s] does not apply to numerical field types	The specified string filter option does not apply to numerical field types.	Specify a numeric compatible filter option and try again.
Store-10888-901: initialization did not complete	Attempted to retrieve lbmmon message for before initialization was complete.	Contact Informatica Support.
Store-10888-902: automon could not find store named[s]	Attempt to retrieve lbmmon message for named store failed.	Contact Informatica Support.
Store-10888-903: store [s] invalid automon regular expression [s] s for field [s] of qualifier [s]	Attempt to parse UME store automon filter failed due to illegal regular expression.	Specify a legal expression and try again.
Store-10888-904: store [s] invalid automon field option type[s]	Attempt to parse UME store automon filter failed due to invalid filter option type.	Specify a valid type and try again.
Store-10888-905: store [s] invalid automon qualifier[s]	Attempt to parse UME store automon filter failed due to invalid qualified field name.	Specify a valid dot separated qualifier and field name and try again.
Store-10888-906: store [s] missing automon numerical argument[s] for filter[s]	Attempt to parse UME store automon filter failed. Missing numerical argument.	Please provide a numerical argument and try again.
Store-10888-907: store [s] invalid automon hexadecimal argument[s] for filter[s]	Attempt to parse UME store automon filter failed. Invalid hexadecimal argument.	Please provide a valid hexadecimal argument and try again.
Store-10888-908: store [s] invalid automon numerical argument[s] for filter[s]	Attempt to parse UME store automon filter failed. Invalid decimal argument.	Please provide a valid decimal argument and try again.
Store-10888-909: could not create lbmmon event logging queue for store index [s]	Attempt to create queue for logging lbmmon events failed.	Contact Informatica Support.
Store-10888-911: store [s] automon filter [s] does not accept arguments	Attempt to parse UME store automon filter failed. Filter option does not accept arguments.	Please remove option argument and try again.
Store-10888-912: store [s] invalid automon filter option s for qualifier[s]	Attempt to parse UME store automon filter failed due to invalid filter option.	Specify a valid filter option and try again.
Store-10888-913: store [s] automon filter [s] requires a string argument	Attempt to parse UME store automon filter failed. Filter option requires a string argument.	Specify a string argument and try again.
Store-11015-13: WARNING: msync EIO from umestore_↩ cache_idx_sync	An operating system error was encountered when attempting to sync the cache index file	Check the log message for the system error code and investigate further

Store-11015-15: Unmap error: s	An operating system error was encountered when attempting to clean up the cache index file mapping	Check the log message for the system error code and investigate further.
Store-11015-19: WARNING: store "%s" existing Session ID u Reg↩ ID u cache index file could not be recreated. Ignoring index.	Failure to recreate the index for the repository, possible data corruption or insufficient memory on the machine	Look at the Store log for additional information
Store-11015-20: While processing the <restore_last> option, an error was encountered opening the cache index file. <restore_last> option will be ignored.	An error ocurred trying to open the cache index file.	Check the specific error message for the cause and possible resolution.
Store-11015-24: cache index info creation failure: s. Ignoring index file s.	Failure to the information block for the repository's index file. Repository processing will continue without restore-last functionality.	Look at the Store log for additional information
Store-11015-2: WARNING: cache index file is too small	The file size for the cache index file was too small and may be corrupted.	The cache index file cannot be used and will be ignored.
Store-11015-4: WARNING: cache index file is too small	The file size for the cache index file was too small and may be corrupted.	The cache index file cannot be used and will be ignored.
Store-11082-100: store "%s" topic "%s" SRC Session ID u RegID u trail message cache SQN u was not sync'd with memory trail SQN u so cache was cleared.	The trail message cache was not pointing to the memory trail SQN.	The trail message cache was cleared so no further action is needed.
Store-11148-01: PostQueue↩ CompletionStatus failed	An attempt to wake up the proactor thread failed.	Contact support if this error persists.
Store-11167-01: store "%s" topic "%s" (SID:u RID:u) does not match the SID (u) in the registration message.	The store is processing a registration message but the Session ID does not match the repository Session ID.	Please contact support.
Store-11191-01: store "%s" topic "%s" (SID:u RID:u) could not establish a quorum for the Proxy Source. No Proxy Source created. Retrying.	The store could not establish a quorum of stores with respositories for the Proxy Source election.	Usually the quorum cannot be establish when communications to other stores fail. It could also be that the other stores do not have a repository.
Store-11191-02: store "%s" topic "%s" Failed to schedule election timer, s	The store could not schedule a proxy source election timer due to an internal lbm error.	The error message of this log contains additional information as to the specific reason the timer schedule failed.
Store-11191-03: store "%s" topic "%s" (SID:u RID:u) could not establish a quorum for the Proxy Source and is giving up.	The store could not establish a quorum of stores with respositories for the Proxy Source election and after retrying, is giving up.	Usually the quorum cannot be establish when communications to other stores fail. It could also be that the other stores do not have a repository.
Store-11191-04: store "%s" topic "%s" Failed to schedule election timer, s	The store could not schedule a proxy source election timer due to an internal lbm error.	The error message of this log contains additional information as to the specific reason the timer schedule failed.
Store-11191-05: store "%s" topic "%s" (SID:u RID:u) restarting Proxy Source election. New registration received.	The store is restarting the Proxy Source election because a new Store registration was received.	No action is required. This is usually a result of an issue being repaired.

Store-11191-06: store "%s" topic "%s" (SID:u RID:u) lost quorum for the Proxy Source. Deleting Proxy Source. LBM message "%s"	The Proxy Source has lost quorum and will be deleted.	Usually the quorum cannot be maintained when communications to other stores fail.
Store-11191-07: store "%s" topic "%s" Failed to schedule election timer, s	The store could not schedule a proxy source election timer due to an internal lbm error.	The error message of this log contains additional information as to the specific reason the timer schedule failed.
Store-11191-08: store "%s" received a repo proxy election message that was not expected since proxy-source-repo-quorum-required is not enabled. s	The store received a message that is used only when the proxy-source-repo-quorum-required option is enabled but that option is disabled. The message will be dropped.	This is a misconfiguration and needs to be fixed. All stores need to be configured the same in regards to proxy-source-repo-quorum-required. Check the IP address of the originator if available.
Store-2179-1: store "%s" topic "%s" is dropping requests for retransmissions of messages persisted to disk. Increase the value of repository-disk-max-read-async-cbs to improve the rate of recovery.	A retransmit request at the store was dropped because the number of outstanding disk reads was greater than repository-disk-max-read-async-cbs.	Increase the value of repository-disk-max-read-async-cbs.
Store-5116-2: WARNING: aio_↩ proactor aio_error u	An AIO system error encountered. This could happen when asynchronous read or write to the disk fails.	Check the store log file for a detailed error description.
Store-5230-15: Store "%s" received retransmission from s for unknown regid 0xx	The UMP store received a unicast proactive retransmission for an unknown reg ID.	Depending on timing, this could just mean the source has been timed out and cleaned up by the store before the proactive retransmission was sent or handled. This is usually not a serious issue and can usually be ignored, however it may indicate a UMP store or source that is overloaded.
Store-5230-16: Store "%s" received retransmission from s for RCV regid u	The UMP store received a unicast proactive retransmission for a reg ID that doesn't belong to a source.	Find out where the proactive retransmissions are being sent from; a duplicate reg ID could be in use between a source and a receiver.
Store-5688-4914: queue "%s" ReadFile read u nbytes u u	The Store has attempted to read the sinc file for the specified number of bytes but was unable to read the entire amount.	Please check the errno and take appropriate actions.
Store-5688-4915: queue "%s" aio_read returned u nbytes u u	The Store has attempted to read the sinc file for the specified number of bytes but was unable to read the entire amount.	Please check the errno and take appropriate actions.
Store-5688-5070: default thread stack size is perhaps too small, u bytes.	The IPC receiver has created a thread for internal processing and the default stack size is too small. The size of the default stack size is dumped and will then be set to a larger size automatically.	
Store-5688-5071: reset thread stack size to u bytes.	The IPC receiver has created a thread for internal processing and the default stack size is too small and is reallocated. This message reports the new size of the stack.	

Store-5688-5243: store "%s" aio↩ _write returned u nbytes u u	Number of bytes returned by AIO write is different than expected	
Store-5688-5247: rotating file cache offset d	The disk file cache has wrapped around to the starting offset of 0.	This is an informational message that requires no action on part of the user.
Store-5688-5261: default thread stack size is perhaps too small, u bytes.	The store has created a thread for internal processing and the default stack size is too small. The size of the default stack size is dumped and will then be set to a larger size automatically.	
Store-5688-5262: reset thread stack size to u bytes.	The store has created a thread for internal processing and the default stack size is too small and is reallocated. This message reports the new size of the stack.	
Store-5688-5290: store "%s" Session ID u RegID u repository-type forced to disk	Enforcing disk repository. It is currently configured as not disk.	
Store-5688-5292: store "%s" new receiver for topic "%s" Session ID u SRC RegID u created. RCV Session ID u RCV RegID u s s store keepalives s Indices u.u s[u s.u]	The store has created a new receiver for the topic.	This is an informational message. No further action is required. The indicies describe the transport and topic.
Store-5688-5293: store "%s" existing receiver for topic "%s" Session ID u RegID u recreated. Session ID u RegID u Indices u.u [u s.u]s	The store has recreated an existing receiver for the topic.	This is an informational message. No further action is required. The indicies describe the transport and topic.
Store-5688-5294: store "%s" RCV Session ID u RegID u Indices u.u [u s.u] deleted	The receiver with the specified session ID and registration ID has been deleted. This can be due to several different things: the receiver's state-lifetime timing out, the state-lifetime for the source the receiver is subscribed to timing out, or the receiver using the "deregister" API.	This message is encountered during normal operation, and does not need to be addressed.
Store-5688-5296: store "%s" source Session ID u RegID u Re-Registered and moved to Indices u.u [u s.u]s	An old UMP source re-registered with the store on new transport and topic indices.	No action required.
Store-5688-5297: store "%s" receiver Session ID u RegID u Re-Registered and moved to Indices u.u [u s.u]s	An old UMP receiver re-registered with the store on new transport and topic indices.	No action required.
Store-5688-5332: AUDIT: queue "%s" topic "%s" enqueued " UM↩ Q_MSGID_FORMAT "	A message was written to disk that was received directly from a source.	This is an info message and provided for informational purposes when 'log audit trail' is enabled.
Store-5688-5333: AUDIT: queue "%s" topic "%s" resubmitted " U↩ MQ_MSGID_FORMAT "	A message was written to disk that was not received directly from a source.	This is an info message and provided for informational purposes when 'log audit trail' is enabled.
Store-5688-5382: store "%s" topic "%s" Failed to cancel election timer, s	The store could not cancel a proxy election interval timer due to an internal lbm error.	This error message will contain an additional internal lbm error message which will give the exact problem encountered in the library.

Store-5688-5383: store "%s" topic "%s" Session ID u RegID u Failed to delete proxy source, s	The store has failed to delete a proxy source due to internal lbm errors.	The log message will contain additional information about the exact reason, investigate those errors.
Store-5688-5384: store "%s" topic "%s" Session ID u RegID u Proxy source deleted	Information log entry that states the store has successfully deleted a proxy source.	This log is expected under normal operation when proxy sources are enabled.
Store-5688-5385: store "%s" topic "%s" Failed to schedule election timer, s	The store could not schedule a proxy source election timer due to an internal lbm error.	The error message of this log contains additional information as to the specific reason the timer schedule failed.
Store-5688-5442: An error was encountered. See the message above for details.	An error was encountered in the ume configuration. See the "CR↩ ITICAL" error message before this line for details.	
Store-5688-5478: WARNING: store "%s" existing Session ID u RegID u cache file could not be recreated. Renaming files.	Failure to recreate repository, possible data corruption or insufficient memory on the machine	Look at the Store log for additional information
Store-5688-5480: NOTICE: store "%s" topic "%s" SRC Session ID u RegID u duplicate sqn us; dropping duplicates	The UMP store daemon received a duplicate copy of a message fragment it had already previously received.	If the log message contains "received via retransmission", the duplicate sequence number is likely due to a proactive retransmission being sent by the source; this most likely means the store received the message, but the source never got the store's stability ACK for it. If this happens frequently, check for TCP connectivity or firewall issues from the store back to the source's request port. If the log does *not* end with "received via retransmission", something more serious is wrong; the source and the store may be out of sync with each other with respect to what sequence number the source should be sending.
Store-5688-5481: store "%s" topic "%s" SRC Session ID u RegID u unrecoverable loss u (u not reported)	A messages was declared unrecoverably lost by the store's receiver's underlying delivery controller.	See store log for more details.
Store-5688-5483: NOTICE: store "%s" topic "%s" SRC Session ID u RegID u sqn u (UL insert)	A message fragment was declared unrecoverably lost by the store's receiver, but an entry for the fragment was already present in the store's repository.	This can happen if there has been data loss on an original source transport and a new or proxy source has re-registered with the store.
Store-5688-5484: store "%s" topic "%s" SRC Session ID u RegID u unrecoverable loss burst u	A burst of messages were declared unrecoverably lost by the store's receiver's underlying delivery controller.	See store log for more details.
Store-5688-5562: WARNING: Store "%s" existing state file [s] malformed. Renaming files.	While reading in the store's state file for a source, the store detected the file to be corrupt. The file will be renamed and the store will continue to initialize.	The state and cache files can be corrupt if the store was improperly shutdown.

Store-5688-5571: Store "%s" SRC Session ID u RegID u source persistence registration received while in unknown state d	Source registration received in unknown state	no resolution
Store-5688-5574: Store "%s" Receiver Persistence Registration received before the SRI from source. Source RegID u	Received Receiver registration request before any SRI has been seen from the Persistent Source.	This can be due to not receiving the TIR from the source, not joining the transport, or not seeing the SRI on the transport
Store-5688-6526: umestore_retx↩_create failed: shutting down s	Possible Malloc Failure or too big queue size requested	Look at the log file for other failures
Store-5820-1: releasing sinc msg ID [x : x] but could not find in SINC queue msg list	A message was previously added to an internal list for queue browsing support, but was not found in that list upon dequeueing the message.	
Store-5820-2: msg [x : x] was already present in SINC msg list; removing old	A newly received message was already present in an internal message list used for queue browsing support.	
Store-5820-3: msg [x : x] was already present in SINC msg list; removing old	A newly received message was already present in an internal message list used for queue browsing support.	
Store-5867-4: could not create skipped msg list	An internal error occurred during ASL creation	Look for previous error messages in the log such as a malloc error
Store-5867-5: could not create skipped msg list	An internal error occurred during ASL creation	Look for previous error messages in the log such as a malloc error
Store-5867-8: error occurred while evaluating message selector s	An error occurred while evaluating the message selector during assignment for this receiver and message	Look for previous error messages in the log regarding message selector evaluation problems
Store-5867-9: error occurred while evaluating message selector s	An error occurred while evaluating the message selector during assignment for this receiver and message	Look for previous error messages in the log regarding message selector evaluation problems
Store-5891-12: source RegID u disk-cache file contains duplicate sqn x	Duplicate sequence number is detected for the repository being processed	
Store-5891-13: Could not initialize s Repository: s	Key Value Store subsystem failed to start	
Store-5891-14: Store "%s" could not shutdown s subsystem properly.	Store could not shutdown reduced-fd subsystem	Contact customer support with the log file.
Store-5891-15: Store "%s" could not activate the s subsystem	Reduced-fd subsystem is initialized, but can not be activated due to failure activation message send error.	Contact customer support.
Store-5891-17: could not create disk_info_t for the repo[SesnID 0xx RegID u]	If the log message is preceded by NULL ptr errors, Store is attempting to create a structure when it should not. Otherwise, system is out of memory.	Report a bug report if the message is preceded by NULL ptr error. Otherwise, root cause of memory problem should be investigated.

Store-5891-18: WARNING: store "%s" existing SesnID 0xx Reg↩ ID u disk metadata and/or msgs in repository(for non-shutdown) can be removed in a clean way	Store can not delete reduced-fd repository from disk. Error occurred during the submission of delete requests of the messages that belong to repository being deleted to the thread responsible for deleting messages from the disk.	Contact customer support.
Store-5891-21: sanity check failed [s:d]	Function is called in state that is not expected by the function.	Contact customer support
Store-5891-22: sanity check failed [s:d]	Function is called in state that is not expected by the function.	Contact customer support
Store-5891-23: store "%s" s store write returned: s with error code: d	Reduced-fd subsystem can not persist message(s) to disk. Return message and error code give more details.	Contact customer support with the log message printed.
Store-5891-24: store "%s" s store write returned error code: d	Reduced-fd subsystem can not persist message(s) to disk. Error code give more details.	Contact customer support with the log message printed
Store-5891-2: could not submit to control-queue 0xx [s:d]	Can not enqueue control event to key/value worker threads control queue	
Store-5891-30: error in closing the state_fd after re-start is completed for the repo	Reduced-fd repository state file descriptor can not be closed. This is an operating system error.	Contact customer support with the store log file.
Store-5891-32: Store Recovery↩ : key length mismatch read key length: u does not match 8-byte key	While recovering reduced-fd repository, corrupted message is read from the disk. The length of the key that is used to store messages to disk is always 8 bytes. Store is going to discard this message.	Contact customer support with the store log file.
Store-5891-33: Store Recovery↩ : value pointer is null	While recovering reduced-fd repository, message contents are missing for a key value.	Contact customer support with the store log file.
Store-5891-34: key pointer is NU↩ LL	While recovering reduced-fd repository, a message without a key value is detected. Store is going to discard this message.	Contact customer support with the store log file.
Store-5891-35: Store Recovery↩ : Duplicate sequence # is detected, deleting the entry with key: u	During the re-start (following a crash or shutdown), for reduced-fd repositories, while processing messages previously written to disk, the message being processed has a duplicate sequence number—another message with the same sequence number was processed previously. Store is going to discard this message.	Contact customer support with the store log file.
Store-5891-36: Store Recovery↩ : internal error when processing the entry with key: u	During the re-start (following a crash or shutdown), for reduced-fd repositories, while processing messages previously written to disk, an internal error (resource creation, or memory error) occurred.	Contact customer support with the store log file.

Store-5891-38: Can not create s repo thread	On windows platform, creation of the thread responsible for processing reduced-fd I/O requests failed.	Contact customer support with store log file.
Store-5891-39: Can not open s repository	The reduced-fd store can not open/create reduced-fd folder. This error is FATAL.	Contact customer support. Please provide the execution environment, i.e. OS details.
Store-5891-40: Can not create s worker thread info holder structure	The thread information structure that holds vital information that is needed for reduced-fd I/O requests can not be created due to lack of memory	The root cause of the low memory needs to be found, store can not function in this state.
Store-5891-41: Can not get s repository attribute values	The function responsible for gathering reduced-fd subsystem parameters failed.	Contact customer support with the store log file.
Store-5891-42: Can not create s dispatch thread	The thread responsible for calling callback functions for the previously submitted reduced-fd I/O requests can not created.	Contact customer support with store log file.
Store-5891-43: FATAL: Can not open s repository: s: Error s	The reduced-fd store can not open/create the reduced-fd folder. This error is FATAL.	Contact customer support. Please provide the execution environment, i.e. OS details.
Store-5891-44: Rename/or Delete the repository directory: s	The reduced-fd store can not open/create the reduced-fd folder within the cache folder.	Failure to open reduced-fd folder is a serious error. Try running store with an empty cache folder, if error persists, contact customer support
Store-5891-45: s worker thread can not pass the read record to dispatch thread	Reduced-fd subsystem error. Requested message writes requests are processed, i.e. either messages are persisted to disk, or error code is returned, however, request call back is not going to be called due to error in sending the status code to call back dispatch thread	Contact customer support with the store log file.
Store-5891-46: s worker thread can not commit message deletes: err: s	When store is shutting down, the reduced-fd subsystem can not delete messages from disk. Possible failure reasons are reduced-fd-api error, memory error, or NULL pointer might have been passed to delete function.	Contact customer support with the store log file.
Store-5891-47: s worker thread can not commit message deletes during shutdown: err: s	When store is shutting down, reduced-fd subsystem can not delete messages from disk. Possible failure reasons are leveldb-api error, memory error, or NULL pointer might have been passed to delete function.	Contact customer support with the store log file.
Store-5891-48: s worker thread can not commit batch deletes: err: s	Reduced-fd subsystem can not delete messages from disk. Possible failure reasons are reduced-fd-api error, memory error, or NULL pointer might have been passed to delete function.	Contact customer support with the store log file.

Store-5891-49: s worker thread can not commit batch deletes: err: s	Reduced-fd subsystem can not delete messages from disk. Possible failure reasons are reduced-fd-api error, memory error, or NULL pointer might have been passed to delete function.	Contact customer support with the store log file.
Store-5891-4: NULL ptr [s:d]	Null pointer detected	
Store-5891-50: s worker thread can not read msg from s repository err_code: u	A message belonging to a reduced-fd repository can not be retrieved from the disk. There are multiple causes that lead to this error.	The error code in this log message provides more information regarding to why message can not be retrieved. Contact customer support with the store log file.
Store-5891-51: s worker thread can not pass write request status to dispatch thread err_code: u	Reduced-fd subsystem error. Requested message writes requests are processed, i.e. either messages are persisted to disk, or error code is returned, however, request call back is not going to be called due to error in sending the status code to call back dispatch thread	Contact custormer support with the store log file.
Store-5891-52: s worker thread can not commit the write request err_code: u err: s	Reduced-fd repository can not persist message(s) to disk due to internal failure. Error code is printed to log file.	Contact custormer support with the store log file.
Store-5891-54: Can not delete repository from s repository	Store can not delete reduced-fd repository from disk. Error occurred during the submission of delete requests of the messages that belong to repository being deleted to the thread responsible for deleting messages from the disk.	Contact customer support with store log file.
Store-5891-55: Can not delete half constructed repository	This error is reported when a reduced-fd repository is being deleted. The function that deletes a part of the repository resources has been called in a wrong state, i.e. the function must have been asked to clean a resource that does not exist.	Contact customer support with store log file.
Store-5891-56: Can not create msg info for sqn: u msgid: u regid: u	During the re-start (following a crash or shutdown), while processing messages written to disk for reduced-fd repositories, store can not allocate memory for holding message information. System is low in memory.	The root cause of the low memory needs to be found, store can not function in this state.
Store-5891-57: Delete a repository from s repository failed	Store can not delete reduced-fd repository from disk. Error occurred during the submission of delete requests of the messages that belong to repository being deleted to the thread responsible for deleting messages from the disk.	Contact customer support with store log file.

Store-5891-58: s repository delete failed	Store can not delete reduced-fd repository from disk. This error might have occured during the submission of delete requests of the messages that belong to repository being deleted to the thread responsible for deleting messages from the disk. This error might also have occured if the function that deletes reduced-fd repository in a wrong state.	Contact customer support with the store log file.
Store-5891-59: s worker thread can not commit deletes: err: s	The thread that is responsible for processing reduced-fd I/O requests can not delete messages from the disk. The logged message provides more information regarding to nature of the error.	Contact customer support with the store log file.
Store-5891-5: NULL ptr [s:d]	Null pointer detected	
Store-5891-6: NULL ptr [s:d]	Null pointer detected	
Store-5891-7: default thread stack size is perhaps too small, u bytes.	The IPC receiver has created a thread for internal processing and the default stack size is too small. The size of the default stack size is dumped and will then be set to a larger size automatically.	
Store-5891-8: reset thread stack size to u bytes.	The IPC receiver has created a thread for internal processing and the default stack size is too small and is reallocated. This message reports the new size of the stack.	
Store-5892-1: retx thread dequeued node of unknown type: u	An unexpected internal value was encountered.	Please contact support.
Store-5892-2: retx thread error occurred while processing node type: u, s	An error was encountered while sending a retransmission or unicast control message.	Check store machine for oversubscription.
Store-6007-1: Reclaiming Message Event: store "%s" topic "%s" SRC Session ID u RegID u	display the information on the reclaimed message: the topic name and source ID	
Store-6007-2: Reclaiming Message Event: store "%s" topic "%s" SRC Session ID u RegID u RCV Session ID u RegID u	display the information on the reclaimed message: the topic name and source ID and receiver IDs	
Store-6007-4: unknown type of logging message: type=d	unknown logging messages.	
Store-6007-5: [umestore repository] reclamation apply↩ _criteria() failed.	errors occur when applying the criteria to log reclaimed messages	
Store-6034-11: queue "%s" client re-create error: client reg ID x could not be re-created	A client could not be re-created upon reading a context registration event from the SINC log. Something probably went really wrong - malloc failed, etc.	Contact Informatica support.

Store-6034-6: queue "%s" receiver recreate error: registration ID not found	A receiver registration event was read in from the SINC log file without a corresponding initial client registration - most likely the SINC log file is corrupt.	Contact Informatica support.
Store-6034-7: queue "%s" receiver re-create error: topic "%s" receiver-type ID u not understood	A receiver registration event was read in from the SINC log file that is for a receiver type ID that is not currently configured in the queue.	Did the configured receiver type I↩ Ds change in between runs of the queue? Changing queue configuration in between runs without clearing out old SINC log files is not supported. If configured receiver type IDs did not change, contact Informatica support.
Store-6034-8: queue "%s" receiver re-create error: topic "%s" receiver assign ID x could not be re-created	A receiver could not be re-created upon reading a receiver registration event from the SINC log. Something probably went really wrong - malloc failed, etc.	Contact Informatica support.
Store-6199-1: ldb disp thread dequeued node of unknown type: u	An unexpected internal value was encountered.	Please contact support.
Store-6199-2: ldb disp thread error occurred while processing node type: u, s	An error was encountered while sending stability ack or retransmission	Check store machine for oversubscription.
Store-6199-3: lbm_shutdown_↩ log: WFSO res=d, GLE=d	An unexpected error encountered while shutdown	Contact support
Store-6233-1: Store p "%s" read error: message with id u does not exist.	An asynchronous reduced-fd repo read error occurred because the message could not be found.	
Store-6233-2: Store p "%s" read error: message had an unexpected length.	An asynchronous reduced-fd repo error occurred because the message had an unexpected length.	
Store-6233-3: Store p "%s" generic read error.	An asynchronous reduced-fd repo generic read error occurred.	
Store-6233-4: Store p "%s" unknown asynchronous read error (u)	An asychronous reduced-fd repo read reported an unknown error code, possible memory corruption or garbage pointer.	
Store-6241-3: error occurred while evaluating message selector s	An error occurred while evaluating the message selector during assignment for this receiver and message	Look for previous error messages in the log regarding message selector evaluation problems
Store-6246-100: Store "%s" topic "%s" SRC Session ID u RegID u registering with an invalid ume_↩ flight_size_bytes value.	registration with invalid ume_↩ flight_size_bytes value	check config
Store-6246-1: Store "%s" topic "%s" SRC Session ID u RegID u re-registering with a different ume_↩ flight_size_bytes value.	reregistration with invalid ume_↩ flight_size_bytes value	cannot change config values and re-register
Store-6246-2000: store "%s" topic "%s" source SesnID 0xx RegID u repository-size-threshold is greater than repository-size-limit	Repository size threshold is greater than repository size limit	Check config

Store-6246-200: store "%s" topic "%s" source SesnID 0xx RegID u registering with an invalid ume_↩ repository_size_threshold value.	Reregistration with invalid ume_↩ repository_size_threshold value	Check config
Store-6246-2100: store "%s" topic "%s" source SesnID 0xx Reg↩ ID u repository-size-limit is greater than 90% of repository-disk-file-size-limit	Repository size limi tis greather than 90% repository disk file size limit	Check config
Store-6246-2200: store "%s" topic "%s" source SesnID 0xx Reg↩ ID u registering and trying to set the ume_repository_disk_file↩ _size_limit when the repository is not a disk repository.	Reregistration with disk file size limit when repo is memory	Check config
Store-6246-22: store "%s" topic "%s" source SesnID 0xx Reg↩ ID u reregistering and trying to set the ume_repository_disk_file↩ _size_limit when the repository is not a disk repository.	Reregistration with ume_↩ repository_size_threshold value but not a disk store	Cannot change config values and reregister
Store-6246-2: Store "%s" topic "%s" SRC Session ID u RegID u registering as a rpp source but rpp is not allowed.	rpp source registering to a non-rpp repo.	check configs.
Store-6246-3000: store "%s" topic "%s" source SesnID 0xx RegID u repository-size-threshold must be greater than the ume_flight_size	Repository size threshold less than flight size in bytes	Check config
Store-6246-300: Store "%s" topic "%s" SRC Session ID u RegID u registering with an invalid ume_↩ repository_size_limit value.	registration with invalid ume_↩ repository_size_limit value	check config
Store-6246-3: Store "%s" topic "%s" SRC Session ID u RegID u re-registering with a different ume_↩ repository_size_limit value.	reregistration with invalid ume_↩ repository_size_limit value	cannot change config values and re-register
Store-6246-400: Store "%s" topic "%s" SRC Session ID u RegID u registering with an invalid ume↩ _repository_disk_file_size_limit value.	registering with invalid ume↩ _repository_disk_file_size_limit value	check config
Store-6246-4: Store "%s" topic "%s" SRC Session ID u Reg↩ ID u re-registering with a different ume_repository_disk_file_↩ size_limit value.	reregistration with invalid ume↩ _repository_disk_file_size_limit value	cannot change config values and re-register
Store-6246-500: Store "%s" topic "%s" SRC Session ID u RegID u registering with an invalid ume_↩ write_delay value.	registering with invalid ume_write↩ _delay value	check config
Store-6246-5: Store "%s" topic "%s" SRC Session ID u RegID u re-registering with a different ume_↩ write_delay value.	reregistering with invalid ume_↩ write_delay value	cannot change config values and re-register

Store-6246-600: Store "%s" topic "%s" SRC Session ID u Reg↩ ID u registering with an invalid ume_repository_ack_on_reception value.	registering with an invalid ume_↩ repository_ack_on_reception value	check config
Store-6246-6: Store "%s" topic "%s" SRC Session ID u Reg↩ ID u re-registering with a different ume_repository_ack_on_↩ reception value.	reregistering with invalid ume_↩ repository_ack_on_reception value	cannot change config values and re-register
Store-6246-700: store "%s" topic "%s" source SesnID 0xx RegID u registering with an unknown configuration option "%s".	Reregistration with unknown config options	Version mismatch
Store-6246-7: Store "%s" topic "%s" SRC Session ID u RegID u registering with an unknown configuration option "%s".	registering with an unknown configuration option	version mismatch
Store-6246-8: store "%s" topic "%s" source SesnID 0xx RegID u registering with as a RPP source but RPP is not allowed.	Registering as RPP but RPP is not allowed	Check configs
Store-6246-900: Store "%s" topic "%s" SRC Session ID u RegID u registering with an invalid ume_↩ repository_size_threshold value.	registration with invalid ume_↩ repository_size_threshold value	check config
Store-6246-9: Store "%s" topic "%s" SRC Session ID u RegID u re-registering with a differnt ume↩ _repository_size_threshold value.	reregistration with invalid ume_↩ repository_size_threshold value	cannot change config values and re-register
Store-6254-0001: queue "%s" received message list request with message selector string, but can not create message selector object.	can not create internal msg selector object.	
Store-6298-10: Store "%s" SRC Session ID u RegID u deregistered s.u	source has deregistered	source deregistered
Store-6298-11: Store "%s" attempting to deregister a SRC Session ID u RegID u that has already deregistered	source is trying to deregister even though it was already deregistered	preg response for deregistration may have been lost.
Store-6298-12: Store "%s" RCV Session ID u RegID u deregistered s.u	receiver is deregistering	receiver has deregistered
Store-6298-13: Store "%s" attempting to deregister a RCV Session ID u RegID u that has already deregistered	a deregistered receiver is trying to deregister	preg response for deregistration may have been lost.
Store-6298-14: Store "%s" attempting to deregister a client Session ID u RegID u that does not exist	deregistering something that does not exist	a client is attempting to deregister even after it's lifetime / activity timeout has expired.
Store-6300-1: Store "%s" Non-R↩ PP receiver attempting to register to a RPP topic	non-RPP receiver registering to a rpp topic	check receiver config and turn on rpp

Store-6301-1: Store "%s" topic "%s" SRC Session ID u RegID u re-registering as a normal source when it was previously registered as a rpp source.	spp source re-registering when previously registered as rpp	turn on rpp at the source
Store-6301-2: Store "%s" topic "%s" RPP SRC Session ID u Reg↩ ID u re-registering when previously registered as a non-rpp source.	rpp source re-registering when previously registered as spp	turn off rpp at the source
Store-6318-4: Unmap error: s	An operating system error was encountered when attempting to clean up the state file mapping	Check the log message for the system error code and investigate further.
Store-6353-1: store "%s" Original Receiver Paced Persistence (RPP) receiver attempting to re-register to a RPP topic as a non-RPP receiver	A receiver that has registered as an RPP receiver is currently attempting to re-register as a non-RPP receiver. This is not allowed.	The receiver is misconfigured.
Store-6356-1: store "%s" topic "%s" Proxy creation failed to set receiver paced persistence options, s	An error occurred setting receiver paced options on proxy source attributes which are required for registration. Proxy source cannot be created.	Check error message for exact cause and consult the configuration guide.
Store-6375-1: Can not commit the special delete request	Key value worker thread can not commit the special delete request	
Store-6375-2: Can not commit the special delete request	Key value worker thread can not commit the special delete request	
Store-6375-3: s worker thread can not commit the special delete request err_code: u	A message belongs to reduced-fd repository can not be deleted from the disk.	The error code in this log message provides more information regarding to why message can not be deleted. Contact customer support with the store log file.
Store-6375-4: s worker thread can not commit the special delete request err: s	A message belongs to reduced-fd repository can not be deleted from the disk.	The error code (followed by err:) in this log message provides more information regarding to why message can not be deleted. Contact customer support with the store log file.
Store-6395-116: Ack adjustment failed	In a reduced-fd RPP repository, during the re-start(following a shutdown, or crash), the function that calculates, for each message in the repository, number of receivers that need that message failed.	Contact customer support with the log file.
Store-6397-1: store "%s" source SesnID 0xx [RegID u] [s repo] [message-sqn x] CKSUM failed x[cksum on recovered msg]	During the re-start (following crash, or a re-start), for a reduced-fd repository message read from the disk, checksum failed. Message must have been corrupted.	Contact customer support with the store log file.
Store-6397-2: Repository checksum check function failed on src regid: u	The function resposible for check sum processing is called in a wrong state, i.e., one or many of the resource are missing (NULL). The checksum of the messages is not checked.	Contact customer support with the store log file.

Store-6417-2: INFO: Store "%s" could not open existing cache file [s]	The store can not open repository cache file. The file might have been deleted, or for some other reason store can not open it.	Contact customer support with the store log file, and list of files in state and cache directory.
Store-6417-3: Can not find the max sqn of rcv [regid: u]	The function that is responsible for finding maximum sequence number of the current receivers failed.	Contact customer support with the store log file.
Store-6417-4: Repo:u has no messages on disk, and sqn adjustment failed	During the re-start (following shutdown, or crash), sequence number adjustment of empty repository failed. Note that, in RPP mode, if all the receivers are keeping up with the source, repository can be empty.	This error message is preceded with other related error messages. Contact customer support with the store log file.
Store-6417-5: could not initialize s repository: s	Reduced-fd subsystem can not be initialized.	This error message is preceded with other related error messages. Contact customer support with the store log file.
Store-6417-6: INFO: Store "%s"cache file [s] exist, and repo is marked as reduced fd repo in state file. invalid repo state	Inconsistent state has been detected. For a particular repository, there is cache file, and the repository is marked as reduced-fd repository.	Contact customer support with store log file, and the list of files in state and cache directory.
Store-6417-7: INFO: Store "%s" RegID: u triggered late reduced-fd system initialization	This is an information message. Late initialization is triggered when a configuration file is changed such that all the reduced-fd repositories are deleted or changed to disk. If there is a state file for the repositories whose type is changed from reduced-fd to disk, then original repository type–reduced-fd– is enforced, and late initialization is triggered.	Remove the disk cache file or restore the configured repository type to reduced-fd
Store-6425-1: store "%s" Sesn↩ ID 0xx RegID u Configured repo type: u is different than the original type: u Forcing the original type	During the restart (following crash or shutdown), a repository type is changed, however, this is not allowed before the source deregistration. Store is going to enforce original repository type.	Remove the store's state and cache files or restore the configured repository type to the original value.
Store-6492-1: Store "%s" topic "%s" SRC Session ID u Reg↩ ID u registering and trying to set the ume_repository_disk_file↩ _size_limit when the repository is not a disk repository.	registration setting disk size limit when you aren't a disk store	Check configuration.
Store-6492-2: Store "%s" topic "%s" SRC Session ID u Reg↩ ID u registering and trying to set the ume_repository_disk_file↩ _size_limit when the repository is not a disk repository.	registration setting disk size limit when you aren't a disk store	Check configuration.
Store-6492-3: Store "%s" topic "%s" SRC Session ID u RegID u repository-size-threshold is greater than repository-size-limit	Repository size threshold is greater than repository size limit	Check config

Store-6492-4: Store "%s" topic "%s" SRC Session ID u RegID u repository-size-limit is greater than 90%% of repository-disk-file-size-limit	Repository size limit is greater than 90% repository disk file size limit	Check config
Store-6492-5: Store "%s" topic "%s" SRC Session ID u RegID u repository-size-threshold must be greater than ume_flight_size_bytes	Repository size threshold less than flight size in bytes	Check config
Store-6524-1: msg_size_on_disk is called for a unrecoverable lost sqn: u	The function that calculates the message size in disk for reduced-fd repositories is called for a loss message. Function handles the case correctly, however, this function is not supposed to be called for the loss messages.	Contact customer support.
Store-6543-1: could not lseek cache file RegID u: s	During the creation of repository cache file, system call to change the file offset to the beginning of the cache file failed.	Contact customer support
Store-6543-2: could not write cache file RegID u: s	During the creation of repository cache file, special marker can not be written to the cache file.	Contact customer support
Store-6557-1: store "%s" source SesnID 0xx RegID u Re-↩ Registered and moved to Indices u.u [s.u] RPP	RPP source reregistered	RPP source reregistered
Store-6557-2: store "%s" receiver SesnID 0xx RegID u Re-↩ Registered and moved to Indices u.u [s.u] RPP	RPP receiver re-registered	RPP receiver re-registered
Store-6589-2: WARNING: msync EIO from umestore_state_↩ update_rcv_timers	write all modified data to the disk.	
Store-6607-1: queue "%s" observer receiver registration error↩ : topic "%s" could not create observer receiver	A UMQ observer receiver could not be created - this probably means malloc failed or something else went terribly wrong.	Contact Informatica support.
Store-6607-2: queue "%s" receiver registration error: assign ID 0xx could not re-create receiver	A UMQ receiver could not be re-created - this probably means malloc failed or something else went terribly wrong.	Contact Informatica support.
Store-6620-1: INFO: Could not rename file [s] to [s]: s	The system failed to rename a corrupted cache, state or index file.	Review the system error string and resolve the system issue before restarting the store.
Store-6652-1: umestore_retx_↩ timer_check : retx_ctrl is not allocated	Retransmission Control Structure is not allocated	View Store log for errors
Store-6807-1: lbm_shutdown_↩ log: WFSO res=d, GLE=d	An error was encountered while Shutting Down Umestore	Check store log of other errors
Store-6975-1: source registered with zero RegID or no store information was found - proxy source disabled	A source attempted to register to a store with proxy sources enabled but did not have explicit registration IDs or session IDs enabled, or did not send store configuration information with the registration.	Check the source to make sure registration IDs or session IDs are explicitly specified, or check that compatible versions of source and store applications are used.

Store-7000-1: lbm_context_attr_↩ str_setopt - context_name: s	Failed to set the context name on the main store context.	Check for resource exhaustion, out of memory errors, etc.
Store-7000-2: lbm_context_attr_↩ str_setopt - context_name: s	Failed to set the context name on the proxy store context.	Check for resource exhaustion, out of memory errors, etc.
Store-7046-1: store "%s" topic "%s" transport s tidx u SesnID 0xx RegID u RA	A repository has gained association (RA) with a source and will now retain that source's messages.	None
Store-7049-2: NOTICE: store "%s" topic "%s" SRC Session ID u Reg↩ ID u sqn u reported as unrecoverably lost via normal transport, but was successfully received earlier via retransmission	A message fragment was declared unrecoverably lost by the store's receiver's underlying delivery controller, but the fragment was already previously recovered (probably by proactive retransmission).	Check for data loss on the source's transport between the source and the store. This message indicates that the store *did* actually receive the message data (it did NOT lose it), it just didn't do so through the preferred means.
Store-7049-3: Store "%s" received retransmission of SQN: u for SRC RegID u from s	The UMP store received a unicast proactive retransmission.	This probably indicates loss of either the message data from the source to the store, or of stability ACKs from the store to the source. Sources of loss should be investigated.
Store-7216-1: For: s queue-management-join-request-timeout [u] can not be less than twice the queue-management-master-activity-timeout [u]. Overriding queue-management-join-request-timeout value to u	queue-management-join-request-timeout is configured less than its minimum value, i.e. 2 x queue-management-master-activity-timeout, this configuration can lead to multiple master queues.	Configure queue-management-join-request-timeout value greater than twice the queue-management-master-activity-timeout.
Store-7239-1: Store "%s" [Source Session ID u Source RegID u Receiver Session ID: u Receiver RegID: u] failed to define	Store can not assign receiver its previous RegID. This can happen (i) State file corruption leads to earlier assignment of receiver's RegID (ii) Memory error	Contact customer support
Store-7239-2: Store "%s" can not re-create Receiver [Session ID: u RegID u] for Source [Session ID u RegID u]	Store can not recreate a receiver due to a memory error from state file.	Contact customer support
Store-7256-1: Store "%s" source RegID u Keepalive ignored, client invalid	The store received a keepalive that could not be associated with a source or receiver client	This may indicate some internal errors regarding managing source and receiver clients.
Store-7256-2: LBMC Error handling registration request. s	There was an error handling a persistent registration request at the store	Look in the store log for previous errors that might indicate why this would fail.
Store-7256-3: LBMC Error handling retransmit request. s	There was an error handling a retransmit request at the store	Look in the store log for previous errors that might indicate why this would fail.
Store-7256-4: LBMC Error handling acknowledgment. s	There was an error handling a message acknowledgment at the store	Look in the store log for previous errors that might indicate why this would fail.
Store-7256-5: LBMC Error handling keepalive. s	There was an error handling a source or receiver keepalive at the store	Look in the store log for previous errors that might indicate why this would fail.

Store-7297-1: store "%s" topic "%s" Received proxy source PR↩EG from self with invalid topic and transport indicies, ignoring.	A PREG request from a proxy source was received with an election token matching the proxy source hosted by this store. This PREG request is ignored.	This can occur if the store context thread has fallen behind in processing incoming PREG requests from the socket buffer, to the point where the store is processing PR↩EG requests for proxy sources that no longer exist. Take steps to reduce the load on the store such as reducing the number of sources registered.
Store-7704-01: store "%s" SRC Session ID u RegID u disk-cache file contains duplicate sqn u	The cache file for the given Store, Session ID, and Registration ID contains a duplicate Sequence Number. Duplicate will be skipped.	If this problem continues, contact support.
Store-7704-03: Disk Cache loading: slow disk read detected regid(u)	The cache file containing the given Reg ID is slow. After 1 second, a read of 1,048,576 bytes did not complete.	Check the file/disk.
Store-7704-04: Disk Cache loading: slow disk read detected regid(u)	The cache file containing the given Reg ID is slow. After 1 second, a read of 1,048,576 bytes did not complete.	Check the file/disk.
Store-8000-100: store [s] PREG marker 0xx RegID u Session ID u Indices u.u [s.d] StoreID x L/T <d - d> s	A Source registered with the store.	No further action is required.
Store-8000-101: store [s] PREG marker 0xx RegID u Session ID u idx u.u [s.d] StoreID x L/T <d - d> s	A Source registered with the store.	No further action is required.
Store-8079-10: Starting store "%s"	Beginning the initialization process for the named store.	This is for informational purposes only and can be ignored.
Store-8079-1: Created context thread: id[s]	The store created a context with the reported thread id.	This is for informational purposes only and can be ignored.
Store-8079-2: Created proxy context thread: id[s]	The store created a proxy context with the reported thread id.	This is for informational purposes only and can be ignored.
Store-8079-3: Created retransmission thread: id[s]	The store created the retransmission thread with the reported thread id.	This is for informational purposes only and can be ignored.
Store-8079-4: Created the log offload thread: id[s]	The store created the log offload thread with the reported thread id.	This is for informational purposes only and can be ignored.
Store-8079-5: Created blocked io thread: id[s]	The store created the blocked io thread with the reported thread id.	This is for informational purposes only and can be ignored.
Store-8079-7: Created proactor thread: id[s]	The store created the proactor thread with the reported thread id.	This is for informational purposes only and can be ignored.
Store-8106-1: Store "%s" using port u from range context request↩_tcp_port_low (u) - request_tcp_↩port_high (u).	User specified 0 for the store port. This means that it will be started on a port selected from within the context request_tcp_port_low - request_tcp_port_high range.	Normal operation, no action needed.
Store-8192-1: store "%s" Original Source Paced Persistence(↩SPP) receiver attempting to re-register to a non-RPP topic as a RPP receiver	A receiver that has registered as an non-RPP receiver is currently attempting to re-register as an RPP receiver. This is not allowed.	The receiver is misconfigured.

Store-8192-2: store "%s" Original blocking Receiver Paced Persistence(RPP) receiver attempting to re-register as a non-blocking RPP receiver	A receiver that has registered as a blocking RPP receiver is currently attempting to re-register as a non-blocking RPP receiver. This is not allowed.	The receiver is misconfigured.
Store-8192-3: store "%s" Original non-blocking Receiver Paced Persistence(RPP) receiver attempting to re-register as a blocking RPP receiver	A receiver that has registered as an non-blocking RPP receiver is currently attempting to re-register as a blocking RPP receiver. This is not allowed.	The receiver is misconfigured.
Store-8223-1: Could not add new regid x to ctlr: s	The store was unable to add a new source to its list of clients.	Typically this message indicates that something else has gone wrong previously. Check for additional error messages.
Store-8223-2: Could not create A↩ SL: s	The store was unable to create a client list for a source.	Typically this message indicates that something else has gone wrong previously. Check for errors indicating that the system is out of memory.
Store-8223-3: Could not create add new topic entry for regid d: s	The store was unable to create a new entry for a source.	Typically this message indicates that something else has gone wrong previously. Check for errors indicating that the system is out of memory.
Store-8223-4: Set RegID seed to u	The next RegID the store will assign has been set to the specified value.	This is purely an informational message, and requires no action on the user's part.
Store-8223-5: Reset RegID seed to u	The next RegID the store will assign has been set to the specified value.	This is purely an informational message, and requires no action on the user's part.
Store-8223-6: Could not cleanly unwind client p when attempting source registration.	The store was unable to clean up after a source failed to register.	Typically this message indicates that something else has gone wrong previously. Check for previous error messages.
Store-8269-1: lbm_context_attr↩ _setopt - compatibility_include_↩ pre_um_6_0_behavior: s	Failed to turn off pre 6.0 compatibility mode on the proxy store context.	Check for resource exhaustion, out of memory errors, etc.
Store-8269-2: store "%s" topic "%s" proxy creation failed to set transport_tcp_use_session_id 0: s	An error occurred setting transport_tcp_use_session_id for a proxy source being created with pre 6.0 compatibility enabled.	Check the error message for exact cause and consult the configuration guide
Store-8764-1: Store "%s" failed to register source: s	A source attempted to register, but an error occurred while trying to add it to the store's list of known clients.	Check for included log message for details.
Store-8808-1: settings other than 1 for repository-disk-max-write-async-cbs are no longer allowed due to the possibility of data corruption. Ignoring requested value of d	Multiple outstanding async IO callbacks have been found to cause cache file corruption in some cases and are no longer allowed as a result.	Change the store's XML configuration file to specify a value of 1 for repository-disk-max-write-async-cbs .
Store-9115-01: store "%s" topic "%s" source [s] BOS	Informational message indicating that a BOS has been received on the given topic and source.	No action required.

Store-9115-02: store "%s" topic "%s" source [s] Session ID u RegID u SRI	Informational message indicating that a source has completed registration with the store.	No action required.
Store-9115-03: store "%s" topic "%s" source [s] Session ID u RegID u EOS	Informational message indicating that an EOS has been received on the given topic and source.	No action required.
Store-9302-1: Store "%s": Existing state file [s] in use by another process	The existing state file is locked by another process	Ensure that other store processes are not running with the same configured state and cache directories.
Store-9302-2: Store "%s": Existing cache file [s] in use by another process	The existing cache file is locked by another process	Ensure that other store processes are not running with the same configured state and cache directories.
Store-9462-1: Received Keepalive Message that is not type STO↩ RE : [s:u] Originating Domain : u Keepalive Type : d	The store received a Keepalive request, but of a type that was not expected. The message written to the log includes the originating domain id, the Keepalive type, and the IP address and port of the requester.	Normally, this message can be ignored as the UMP Store is logging the existence of a stray keepalive. However, if this is a recurring message, examine the IP and port to determine the source of the unexpected Keepalive request.
Store-9462-2: Received Keepalive Message that is not type STORE : [s:u] Keepalive Type : d	The store received a Keepalive request, but of a type that was not expected. The message written to the log includes the Keepalive type as well as the IP address and port of the requester.	Normally, this message can be ignored as the UMP Store is logging the existence of a stray keepalive. However, if this is a recurring message, examine the IP and port to determine the source of the unexpected Keepalive request.
Store-9462-3: Received Keepalive Message that is not type STORE : [s:u] Keepalive Type : d	The store received a Keepalive request, but of a type that was not expected. The message written to the log includes the Keepalive type as well as the IP address and port of the requester.	Normally, this message can be ignored as the UMP Store is logging the existence of a stray keepalive. However, if this is a recurring message, examine the IP and port to determine the source of the unexpected Keepalive request.
Store-9462-4: Received Keepalive Message that is not type STO↩ RE : Source of Keepalive Message could not be determined Keepalive Type : d	The store received a Keepalive request, but of a type that was not expected. The message written to the log includes the Keepalive type. The requester IP and port are not available and, consequently, request IP and port will not be written to the log.	For this unexpected Keepalive request the source of the message could not be determined.
Store-9689-1: Default application specified for LBM XML configuration file [s]	The application name for XML configuration files was set to NULL.	Log notification that NULL application name will be used
Store-9689-2: LBM XML configuration file [s] specified, but no application-name provided. Setting application name to "umestored"	The application name for XML configuration files defaults to "umestored" .	Specify the optional "application-name" sub-configuration to reference a different application in the XML file

StoreApi-10184-01: could not create dmon event queue	UM could not create an dmon event queue.	Contact Informatica Support.
StoreApi-10184-02: could not create store list	UM could not create a list of configured stores.	Contact Informatica Support.

StoreApi-10184-03: failed to create dmon evq thread [d]	UM failed to create an internal event queue dispatch thread.	Contact Informatica Support.
StoreApi-10184-04: failed to create dmon ctx attr: s	UM was unable to create context attributes.	Contact Informatica Support.
StoreApi-10184-06: failed to create dmon ctx: s	UM was unable to create an internal reactor only context.	Contact Informatica Support.
StoreApi-10184-07: unable to schedule dmon timer	UM was unable to schedule an internal timer.	Contact Informatica Support.
StoreApi-10184-09: unable to schedule dmon timer	UM failed to schedule an internal timer.	Contact Informatica Support
StoreApi-10184-107: failed to set dmon context option [operational↩ _mode] to [embedded]: s	UM was unable to set specified daemon monitoring context attributes.	Contact Informatica Support.
StoreApi-10184-112: could not enqueue disk delete	UM could not enqueue disk delete.	Contact Informatica Support.
StoreApi-10184-30: could not create topic dmon block repo list	UM could not create topic dmon block repo list.	Contact Informatica Support.
StoreApi-10184-31: could not insert topic block into store topic list	UM could not insert topic block into store topic list.	Contact Informatica Support.
StoreApi-10184-32: could not delete repo	UM could not delete repo because the receive list was not empty.	Contact Informatica Support.
StoreApi-10184-33: could not insert receive dmon block into receive list	UM could not insert receive dmon block into receive list.	Contact Informatica Support.
StoreApi-10184-34: attempted to delete an invalid repository dmon block	UM attempted to delete an invalid repository dmon block.	Contact Informatica Support.
StoreApi-10184-35: could not find receiver regid to delete	UM could not find receiver regid to delete.	Contact Informatica Support.
StoreApi-10184-40: could not insert store dmon into store list	UM could not insert store dmon into store list.	Contact Informatica Support.
StoreApi-10184-41: could not delete store dmon block	UM could not delete store dmon block since the topic_list was not empty.	Contact Informatica Support.
StoreApi-10184-43: could not create repo dmon block receiver list	UM could not create repo dmon block receiver list.	Contact Informatica Support.
StoreApi-10184-44: could not enqueue repo create	UM could not enqueue repo create.	Contact Informatica Support.
StoreApi-10184-45: could not enqueue repo delete	UM could not enqueue rcv delete.	Contact Informatica Support.
StoreApi-10184-47: could not enqueue rcv create	UM could not enqueue rcv create.	Contact Informatica Support.
StoreApi-10184-48: could not enqueue rcv delete	UM could not enqueue rcv delete.	Contact Informatica Support.
StoreApi-10888-600: failed to create dmon event queue attr: s	UM was unable to create event queue attributes.	Contact Informatica Support.
StoreApi-10888-601: could not set dmon event queue monitor interval	UM could not set event queue attribute.	Contact Informatica Support.
StoreApi-10888-602: failed to delete dmon event queue attr: s	UM was unable to delete an internal context attributes structure. Some memory has been leaked.	Contact Informatica Support.
StoreApi-10888-800: could not enqueue store created event	UM could not enqueue store created event.	Contact Informatica Support.
StoreApi-10888-801: could not enqueue store deleted event	UM could not enqueue store deleted event.	Contact Informatica Support.

StoreApi-10888-802: could not enqueue source registered event	UM could not enqueue source registered event.	Contact Informatica Support.
StoreApi-10888-803: could not enqueue source reregistered event	UM could not enqueue source reregistered event.	Contact Informatica Support.
StoreApi-10888-804: could not enqueue source recreated event	UM could not enqueue source recreated event.	Contact Informatica Support.
StoreApi-10888-805: could not enqueue source deregistered event	UM could not enqueue source deregistered event.	Contact Informatica Support.
StoreApi-10888-806: could not enqueue source deleted event	UM could not enqueue source deleted event.	Contact Informatica Support.
StoreApi-10888-807: could not enqueue proxy source created event	UM could not enqueue proxy source created event.	Contact Informatica Support.
StoreApi-10888-808: could not enqueue proxy source deleted event	UM could not enqueue proxy source deleted event.	Contact Informatica Support.
StoreApi-10888-809: could not enqueue topic create event	UM could not enqueue topic create event.	Contact Informatica Support.
StoreApi-10888-810: could not enqueue rpp writing event	UM could not enqueue rpp writing event.	Contact Informatica Support.
StoreApi-10888-811: could not enqueue rpp repo empty event	UM could not enqueue rpp repo empty event.	Contact Informatica Support.
StoreApi-10888-812: could not enqueue receiver registered event	UM could not enqueue receiver registered event.	Contact Informatica Support.
StoreApi-10888-813: could not enqueue receiver reregistered event	UM could not enqueue receiver reregistered event.	Contact Informatica Support.
StoreApi-10888-814: could not enqueue receiver deregistered event	UM could not enqueue receiver deregistered event.	Contact Informatica Support.
StoreApi-10888-815: could not enqueue receiver recreated event	UM could not enqueue receiver recreated event.	Contact Informatica Support.
StoreApi-10888-816: could not enqueue receiver deleted event	UM could not enqueue receiver deleted event.	Contact Informatica Support.
StoreApi-10888-817: encountered an unknown event type	UM encountered an unknown automon event type.	Contact Informatica Support.
StoreApi-11015-10: umestore↩_cache_idx_map CreateFile↩Mapping: s	An operating system error was encountered when attempting to map the cache index file	Check the log message for the system error code and investigate further
StoreApi-11015-11: umestore_↩cache_idx_map MapViewOfFile: s	An operating system error was encountered when attempting to map the cache index file	Check the log message for the system error code and investigate further
StoreApi-11015-12: umestore_↩cache_idx_sync FlushViewOfFile↩: s	An operating system error was encountered when attempting to flush the cache index file	Check the log message for the system error code and investigate further
StoreApi-11015-14: umestore_↩cache_idx_sync msync: s	An operating system error was encountered when attempting to sync the cache index file	Check the log message for the system error code and investigate further
StoreApi-11015-16: Could not open cache index file [s]: s	An operating system error was encountered when attempting to open the cache index file	Check the log message for the system error code and investigate further
StoreApi-11015-17: Existing cache index file [s] in use by another process	The cache index file is locked by another process	Ensure that other store processes are not running with the same configured state and cache directories.
StoreApi-11015-18: Could not open cache index file [s]: s	An operating system error was encountered when attempting to open the cache index file	Check the log message for the system error code and investigate further

StoreApi-11015-1: umestore_↩ cache_idx_size fstat: s	An operating system error was encountered when attempting to fstat the cache index file	Check the log message for the system error code and investigate further
StoreApi-11015-21: Failed to unmap file. System error (d)	The operating system call to unmap the cache index file returned an error.	Check the system error code and determine why it would happen
StoreApi-11015-22: Failed to close cache index file mapping handle. System error (d)	The operating system call to close the cache index file mapping handle returned an error.	Check the system error code and determine why it would happen
StoreApi-11015-23: Failed to unmap state file. System error (d)	The operating system call to unmap the cache index file returned an error.	Check the system error code and determine why it would happen
StoreApi-11015-3: umestore_↩ cache_idx_size GetFileSizeEx: s	An operating system error was encountered when attempting to get the file size of the cache index file	Check the log message for the system error code and investigate further
StoreApi-11015-5: umestore_↩ cache_idx_setsize SetFilePointer↩ : s	An operating system error was encountered when attempting to process the cache index file	Check the log message for the system error code and investigate further
StoreApi-11015-6: umestore_↩ cache_idx_setsize SetEndOfFile: s	An operating system error was encountered when attempting to process the cache index file	Check the log message for the system error code and investigate further
StoreApi-11015-7: umestore_↩ cache_idx_setsize lseek: s	An operating system error was encountered when attempting to process the cache index file	Check the log message for the system error code and investigate further
StoreApi-11015-8: umestore_↩ cache_idx_setsize write: s	An operating system error was encountered when attempting to process the cache index file	Check the log message for the system error code and investigate further
StoreApi-11015-9: umestore_↩ cache_idx_map mmap: s	An operating system error was encountered when attempting to map the cache index file	Check the log message for the system error code and investigate further
StoreApi-5867-6: could not insert umq_topic_appset_t skipped rcv list ASL [s:d]	An internal error occurred during ASL insertion	Look for previous error messages in the log such as a malloc error
StoreApi-5867-7: could not insert umq_topic_appset_t skipped rcv list ASL [s:d]	An internal error occurred during ASL insertion	Look for previous error messages in the log such as a malloc error
StoreApi-5891-10: could not create recovery asl	Memory error during the ASL creation	
StoreApi-5891-11: could not create repo ASL	Memory error: repository message asl creation is failed	
StoreApi-5891-19: Repository async read submit error	There was an error submitting an async read operation to the queue.	This usually results from malloc failure, ensure host machine has sufficient resources.
StoreApi-5891-1: could not create tl queue [s:d]	Key value repo worker thread's queue creation failed	
StoreApi-5891-28: umestore_↩ state_new_rcv re-opening state file failed. s	Can not re-open state file	
StoreApi-5891-29: umestore_↩ state_new_rcv closing fd after reopening failed. s	Can not close the file descriptor after reopening it.	
StoreApi-5891-37: could not create repo ASL	Memory error: repository message asl creation is failed	
StoreApi-5891-3: could not allocate u bytes [s:d]	MALLOC error	

StoreApi-5891-53: could not create repo rcv_ack_cache	Repo rcv ack cache creation failed	
StoreApi-5891-60: umestore_↩state_create closing fd failed: s	Can not close the file descriptor	
StoreApi-5891-9: pthread_create↩: d	Key value repo worker thread creation failed	
StoreApi-6007-12: could not create repo log	some errors occurred when creating the reclamation log.	
StoreApi-6034-10: could not insert umq_topic_rcv_t into appset active_rcv_assign_q [s:d]	A UMQ receiver could not be placed in an application set's internal list of receivers with non-empty per-receiver assignment queues. This probably means malloc failed.	Contact Informatica support.
StoreApi-6034-9: could not create receiver assign_q [s:d]	The per-receiver assignment queue could not be created - this probably means malloc failed.	Contact Informatica support.
StoreApi-6118-100: could not create repo rcv_ack_cache	Could not create rcv ack cache	out of memory
StoreApi-6318-1: Failed to unmap file. System error (d)	The operating system call to unmap the state file returned an error.	Check the system error code and determine why it would happen
StoreApi-6318-2: Failed to close state file mapping handle. System error (d)	The operating system call to close the state file mapping handle returned an error.	Check the system error code and determine why it would happen
StoreApi-6318-3: Failed to unmap state file. System error (d)	The operating system call to unmap the state file returned an error.	Check the system error code and determine why it would happen
StoreApi-6333-1: Attempting to delete NULL disk info, file was not created.	The store was deleting a repository and the disk info holder was NU↩LL. There were most likely errors when the store attempted to create the disk.	Investigate why the store could not create the disk info properly. Usually this occurs when the process has hit the file descriptor limit.
StoreApi-6333-2: Attempting to delete NULL state file. State file was not created.	The store was deleting a repository and the state file was NULL. There were most likely errors when the store attempted to create the file.	Investigate why the store could not create the state file properly. Usually this occurs when the process has hit the file descriptor limit.
StoreApi-6417-1: could not create repo ASL	Memory error: repository message asl creation is failed	
StoreApi-6543-3: umestore↩_repository_write_rec_marker CreateEvent: s	Can not create event for rec marker	There is not resolution to this
StoreApi-6543-4: umestore↩_repository_write_rec_marker: WriteFile: s	umestore_repository_write_rec_↩marker: GetLastError Failed	Get last error failed
StoreApi-6543-5: umestore↩_repository_write_rec_marker GetOverlappedResult: s	GetOverlappedResult function failed	no resolution
StoreApi-6589-1: umestore_↩state_update_rcv_timers Flush↩ViewOfFile: s	write to disk the mapping view of the state file.	
StoreApi-6589-3: umestore_↩state_update_rcv_timers msync: s	write to disk the mapping view of the state file.	
StoreApi-8000-10: .	A Receiver Registration request was denied because of an internal error.	

StoreApi-8000-11: .	A Receiver Registration request was denied because of an internal error.	Contact customer support with the log file.
StoreApi-8000-12: .	A Receiver Registration request was denied because of an internal error.	Contact customer support with the log file.
StoreApi-8000-13: .	A Receiver Registration request was denied because of an internal error.	Contact customer support with the log file.
StoreApi-8000-14: .	A Receiver Registration request was denied because of an internal error.	Contact customer support with the log file.
StoreApi-8000-15: .	A Receiver Registration request was denied because of an internal error.	Contact customer support with the log file.
StoreApi-8000-1: RegID is already in use.	A Source Registration request was denied because the requested RegID was already in use.	Contact customer support with the log file.
StoreApi-8000-20: Internal error↩ : re-registration to a NULL receiver.	A Receiver Registration request was denied because of an internal error.	Contact customer support with the log file.
StoreApi-8000-21: Internal error↩ : preg src_reg_id mismatch	A Receiver Registration request was denied because of an internal error.	Contact customer support with the log file.
StoreApi-8000-22: Receiver activity Timeout has not expired.	Registration attempt is rejected because the receiver activity timeout has not expired	Another receiver with the same RegID/sessionID is trying to register with the store within the activity period .
StoreApi-8000-23: .	A Receiver Registration request was denied because of an internal error.	Contact customer support with the log file.
StoreApi-8000-24: .	A Receiver Registration request was denied because of an internal error.	Contact customer support with the log file.
StoreApi-8000-2: src topic does not match the info topic.	A Source Registration request was denied because the src topic does not match the info topic.	Contact customer support with the log file.
StoreApi-8000-30: .	A Source Registration request was denied because of an internal error.	Contact customer support with the log file.
StoreApi-8000-31: .	A Source Registration request was denied because of an internal error.	Contact customer support with the log file.
StoreApi-8000-32: .	A Source Registration request was denied because of an internal error.	Contact customer support with the log file.
StoreApi-8000-33: .	A Source Registration request was denied because of an internal error.	Contact customer support with the log file.
StoreApi-8000-34: .	A Source Registration request was denied because of an internal error.	Contact customer support with the log file.
StoreApi-8000-35: .	A Source Registration request was denied because of an internal error.	Contact customer support with the log file.
StoreApi-8000-36: .	A Source Registration request was denied because of an internal error.	Contact customer support with the log file.
StoreApi-8000-37: .	A Source Registration request was denied because of an internal error.	Contact customer support with the log file.
StoreApi-8000-38: .	A Source Registration request was denied because of an internal error.	Contact customer support with the log file.

StoreApi-8000-39: .	A Source Registration request was denied because of an internal error.	Contact customer support with the log file.
StoreApi-8000-3: Source Activity timeout has not expired.	A Source Registration request was denied because the Source Activity timeout has not yet expired.	Contact customer support with the log file.
StoreApi-8000-40: .	A Source Registration request was denied because of an internal error.	Contact customer support with the log file.
StoreApi-8000-41: .	A Source Registration request was denied because of an internal error.	Contact customer support with the log file.
StoreApi-8000-4: Problem with R↩ PP configs.	A Source Registration request was denied because of a problem with the RPP configuration.	Contact customer support with the log file.
StoreApi-8000-5: .	A Source Registration request was denied because of an internal error.	Contact customer support with the log file.
StoreApi-8000-6: .	A Source Registration request was denied because of an internal error.	Contact customer support with the log file.
StoreApi-8000-7: .	A Source Registration request was denied because of an internal error.	Contact customer support with the log file.
StoreApi-8000-8: .	A Source Registration request was denied because of an internal error.	Contact customer support with the log file.
StoreApi-8804-1: umestore_↩ state_update_rcv_timers index of receiver entry in state file was negative	The store attempted to update the activity and state lifetime of a receiver, but that receiver's entry index in the state file was negative.	This can be seen when there is a problem writing or reading the state file. Check the store log for disk error log messages.
StoreApi-8840-11: Could not register client [x:u] on topic s. RegID mismatch with [x:u]	A duplicate session ID is in use between two clients on the same topic.	Check for duplication session IDs in application configuration files. Applications should usually explicitly specify a session ID rather than relying on the store to generate one.
StoreApi-9569-1: Can't convert configuration file name [s:d]	The system was not able to allocate the amount of memory required to convert the configuration file name.	The physical memory on the machine may be over committed; try moving some applications to another machine.

12.7 UM MCS Log Messages

MCS-10995-100: Failed to initialize the Monitoring Collector Service:	The MCS failed to initialize.	Contact Informatica support.
MCS-10995-120: Failed to load properties file " + APPLICATION↩ _PROPERTIES_FILE_NAME + ". Reason:	The application properties file could not be found.	Contact Informatica support.
MCS-10995-130: Error initializing LBM	The MCS was unable to initialize LBM.	Contact Informatica support.
MCS-10995-150: Failed to create " + connector + ":	Caught exception trying to create to the specified connector.	Contact Informatica support.

MCS-10995-152: Failed to set logger in " + connector + ":	Caught exception trying to set the logger in the connector.	Contact Informatica support.
MCS-10995-155: Failed to connect to " + connector + ":	Caught exception trying to connect to the specified connector.	Contact Informatica support.
MCS-10995-160: Failed to create a receiver on the monitoring transport:	MCS failed to create a monitor receiver.	Contact Informatica support.
MCS-10995-200: The Monitoring Collector Service failed to start:	The MCS failed to start.	Contact Informatica support.
MCS-10995-220: Received monitoring message had invalid format:	The received message contained an invalid monitoring format.	Contact Informatica support.
MCS-10995-230: Failed to process incoming message:	Caught exception while processing incoming message.	Contact Informatica support.
MCS-10995-240: Failed to process incoming message:	Caught exception while processing incoming message.	Contact Informatica support.
MCS-10995-260: Failed to process incoming message:	Caught exception while processing incoming message.	Contact Informatica support.
MCS-10995-300: Received monitoring message had invalid type:	The received message contained an unknown monitoring packet type.	Contact Informatica support.
MCS-10995-310: Received monitoring message had invalid format:	The received message contained an invalid monitoring format.	Contact Informatica support.
MCS-10995-400: The configuration file must be specified with -v option	The configuration file must be specified with -v option.	Specify the configuration file and try again.
MCS-10995-410: Failed to open MCS XSD file " + MCSConfig.get↩XsdFileName() + ". Reason:	The MCS XSD file could not be opened.	Contact Informatica support.
MCS-10995-411: Failed to process MCS XML file " + configFilename.↩getAbsolutePath() + ". Reason:	The MCS user configuration XML file could not be processed.	The file may be missing, have inappropriate access privileges, or an error in the config file itself.
MCS-10995-420: Unable to load the receiver-transport-opts specified config-file " + transport↩Filename + ".	The transport options file could not be found.	Check the filename and path and try again.
MCS-10995-430: Unable to write pid file:	The MCS was unable to write the Processes ID file.	Check the Process ID path and directory access privileges.
MCS-10995-440: Unable to create a logger:	The MCS was unable to create the logger.	Fix any errors and try again.
MCS-10995-450: Warnings from XML file:	The MCS user configuration XML file generated warnings.	Fix any warnings that are listed.
MCS-10995-460: Failed to load properties file " + connectorProps↩File + ". Reason:	The connector properties file could not be loaded.	The file may be missing, wrong path information or have inappropriate access privileges.
MCS-11077-1: Error setting LBM license:	An internal error was encountered. The server was unable to set the LBM license.	Contact Informatica support.
MCS-11171-100: Failed to process incoming message:	Caught exception while processing incoming message.	Contact Informatica support.