SYNOPSIS

LEARNING MANAGEMENT SYSTEM(LMS)

Submitted by

MOHD ANSAB
2022-501-034

MASTERS IN COMPUTER APPLICATIONS

Submitted to

Ms. NEHA

Department of Computer Science & Engineering
School of Engineering Sciences & Technology

JAMIA HAMDARD
(Deemed to be University)
New Delhi-110062

2024

1. ABSTRACT

The college information, student information, various different types of this project is based on LEARNING MANAGEMENT SYSTEM. Itmanages event going on in our college. It also keeps track records of all the information regarding students those who are placed in the various organization. It has a notice board which contains information about various cultural or technical or any sports which is supposed to be held soon.

2. OBJECTIVES

The objectives of the system are:

- To reduce paper work.
- Reduced operational time.
- Increased accuracy and reliability.
- Increased operational efficiency.
- Data Security.
- Reliable for students to create account.
- New features can be added as per requirements.

3. INTRODUCTION

This learning management system project developed using specific programming languages. The main aim of this project is to develop an online website which covers all the details of college. Admin is the super user of this project. All the record stores in MySQL Database. The proposed software will also reduce the cumbersome paperwork, manual labour, as well as communication cost.

Present State:

- No software present at all.
- Time consumed in accessing the records of the student.
- More time taken to registration of students.

After implementation of project:

- Easy to use GUI
- Students can register online no rush for registration.
- Report of students according to need.
- Easy to maintain database and secured storage.

4. Main Modules of the System

(1) Student Module:- This module used to store student records. It contains the following information i.e. Students profile details, Contact information, Educational details, etc. The users can search the students from the database according to different criteria such as name, course etc.

(2) Notices:- It includes information about various events which is currently going on and which will occur in the near course of time. Notices helps in quick capturing of any occurring event.

(3) Courses :- It includes the information about the courses that are offered in the college like B.A, B.Sc, B.Com, B.Tech, etc.

(4) Contact Us:- It used to store the contacts of the staffs. For any query Students can contact them.

Login:

The system starts with a login page where the registered user can enter username and password to be able to access.

1. Admin
2. Staff

5. TECHNOLOGY

(1) **PHP**: Hypertext preprocessor is a server-side scripting language designed for web development, but also used as general-purpose programming language. It was created in 1994, it is now produced by PHP group. It can interact with many database languages including MySQL.

(2) HTML:
HTML is a hypertext markup language which is, in reality, a spinal cord of any website. Any website can't be structured without the knowledge of HTML. If we make our web page only with the help of HTML, then we can't add many of the effective features in a web page, for making a web page more effective we use various platforms such as static and dynamics methods. And here we are using this language to make our web pages more effective as well as interactive for users to understand. And to make our web pages dynamic we are using JavaScript and XML.

(3) CSS:
CSS Stands for (Cascading Style Sheet). Cascading style sheets are used to format the layout of Web pages. They can be used to define way of writing or style, size of various table, and other aspects of Web pages that previously could only be defined in a static page's HTML. The main work of CSS is to separate content of a web document (written in any markup language) that is written using Cascading Style Sheets. There are lots of benefits that one can extract through this like improved content accessibility, better flexibility and moreover, and hence gives a level of control over various presentation characteristics of the document. It also helps in reducing the problems and helps in saving access time. It gives the option of selecting various style schemes and rules according to the necessity.

4) JAVASCRIPT:

JavaScript is the most famous scripting languages of all time. JavaScript is a Scripting Language of World Wide Web. The main usage of JavaScript is to add various Web function, validations, detections, a creation of cookies and so on. JavaScript is the best scripting languages and that is why it is adopted by almost all browsers. JavaScript is considered the most powerful scripting languages in present use. It is used for the client -side web development. JavaScript is used to make pages more interactive. It is a light-weight programming language and it is embedded directly into the markup syntax. JavaScript, as the name defines, was affected by many languages, especially Java.

5) SQL (MySQL):

It is a structured query language used for querying database. Its function is to control the data like storing and retrieving and data as requested by the software applications.

6. TOOLS

(1) Visual Studio 2010

Microsoft Visual Studio is a powerful IDE that ensures quality code throughout the entire application lifecycle, from design to deployment. Whether you're
developing applications for SharePoint, the web, Windows, Windows Phone, and beyond, Visual Studio is one of ultimate all-in-one solution.

(2) XAMPP SERVER:-

XAMPP is a free and open source cross platform web server. It iseasy and simple to setup. XAMPP stands for Cross-Platform(x), Apache(A), MariaDB(M), PHP(P), Pearl(P).

7. SCOPE FOR DEVELOPMENT OF THIS PROJECT

The requirement of the user is to:

- Access/Search information.
- Log in to the system through the first page of the application.
- Change the password after logging the system.
- View/Change details.
- Can get help through the help option to view different propertyof the system.
- An admin login should be present who can read as well as remove any uploads.

8.DESIGN MODELS:

Design patterns are recurring sequences, built-in PHP . In practice, following standard software patterns will help to achieve more standardcode that is manageable and understandable by a bigger set of softwareprogrammers/developers and architects. Design coding have three patterns…these are…… Creational Patterns Abstract Factory Creates an instance of several families of classes Builder Separates object

construction from its representation. Different Data Flow Diagrams areas follows:

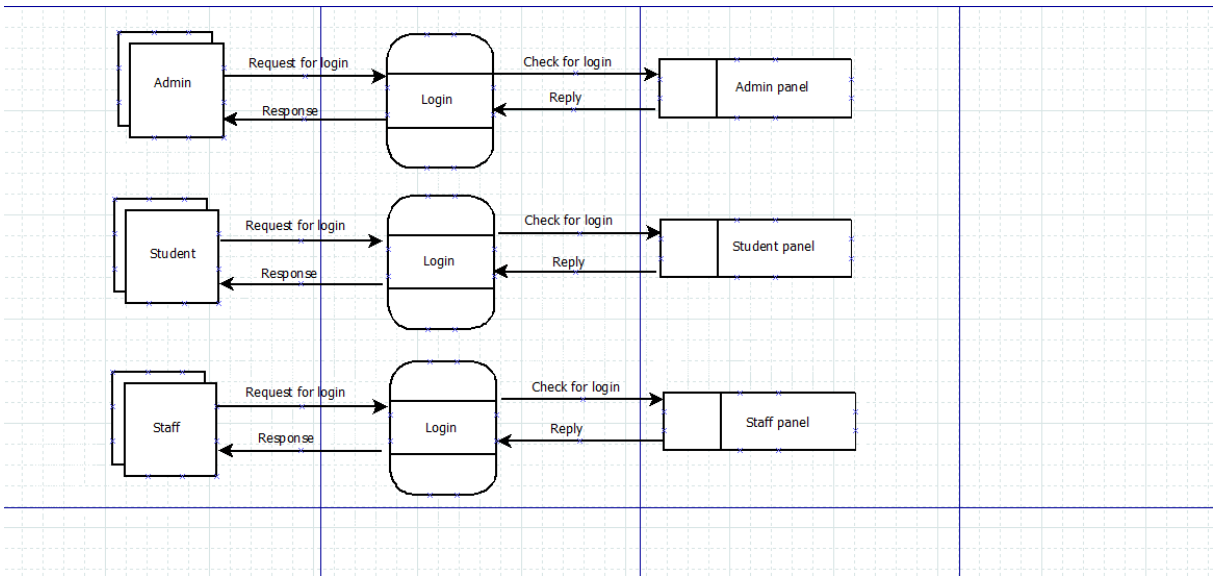

Diagram1: Level 0 DFD for Admin, Student and Staff

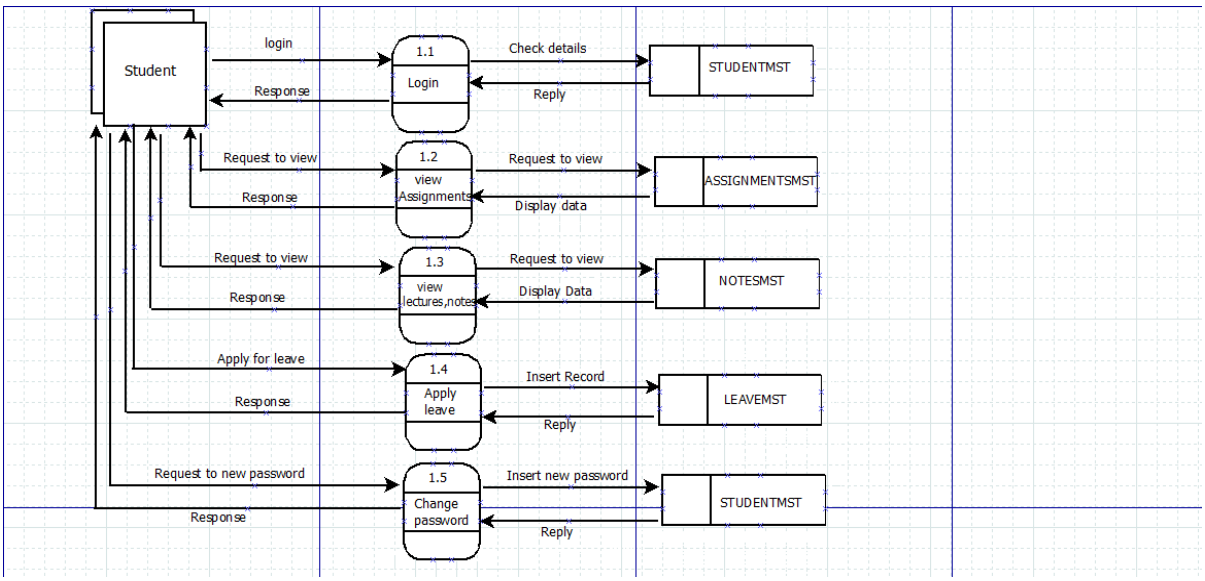

Diagram2: Level 1 DFD for Student

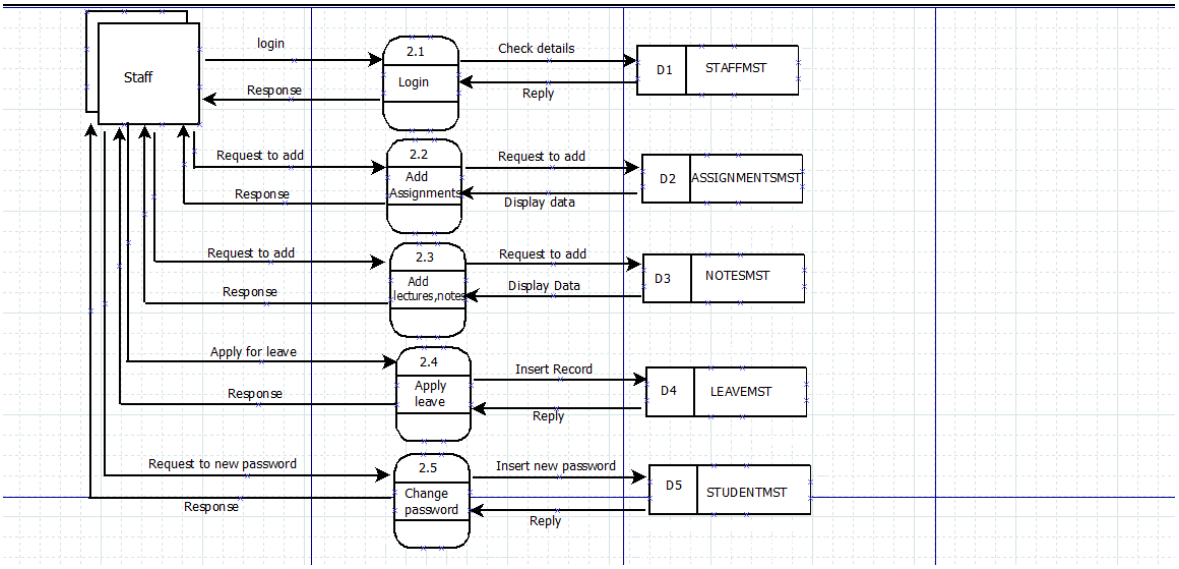

Diagram3: Level 1 DFD for Staff

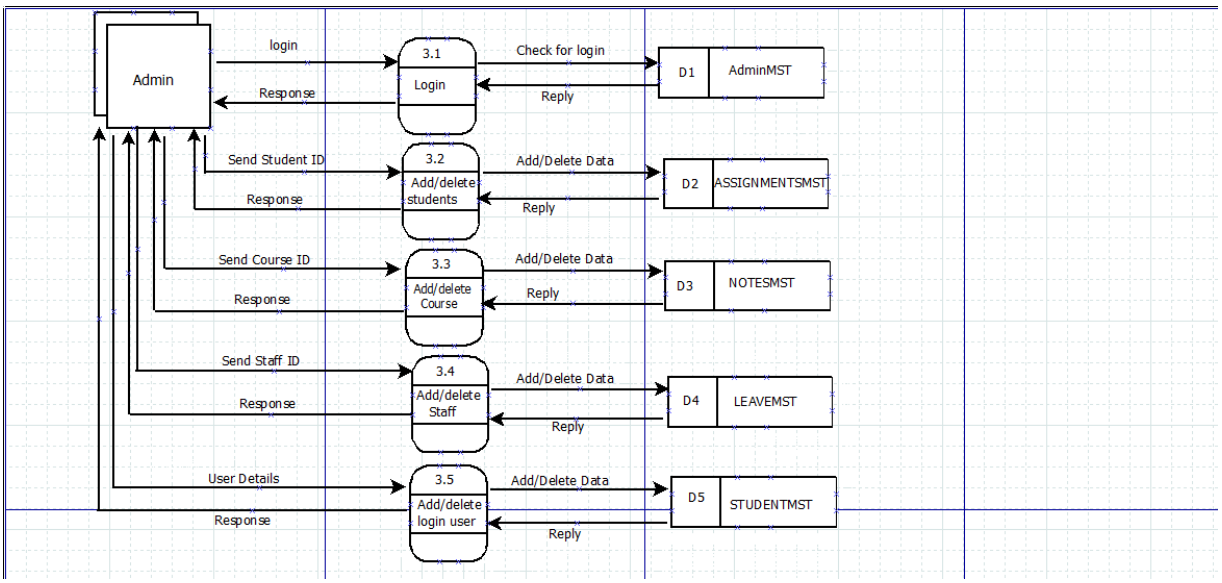

Diagram4: Level 1 DFD for Admin

9.CONCLUSION

This paper assists in modifying the existing system to site based system. This is a paperless work. It can be monitored and controlled remotely. It reduces the manpower required. It provides accurate information always. Malpractice can be reduced. All gathrered and extra information can be saved and can be accessed at any time. The data which is stored in the projects helps in taking intelligent and quick decisions by the management. So it is better to have a web based Information Management System. All the staff members can get the desired information without delay.