NR467 C DT R18 JANUARY 2025

RULES FOR THE CLASSIFICATION OF STEEL SHIPS

NR467 - JANUARY 2025

PART C
MACHINERY, ELECTRICITY, AUTOMATION AND FIRE PROTECTION

STEEL SHIPS

BUREAU VERITAS

BUREAU VERITAS
RULES FOR THE CLASSIFICATION OF STEEL SHIPS

NR467 - JANUARY 2025

This version of the document takes precedence over previous revision. Unless otherwise specified, these rules apply to ships for which contracts are signed on or after January 1st, 2025. The Society may refer to the contents hereof before January 1st, 2025, as and when deemed necessary or appropriate.

The PDF electronic version of this document available on the Bureau Veritas Marine & Offshore website https://marine-offshore.bureauveritas.com/ is the official version and shall prevail if there are any inconsistencies between the PDF version and any other available version.

These rules are provided within the scope of the Bureau Veritas Marine & Offshore General Conditions, enclosed at the end of Part A of NR467, Rules for the Classification of Steel Ships. The latest version of these General Conditions is available on the Bureau Veritas Marine & Offshore website.

PART A
CLASSIFICATION AND SURVEYS
NR467 A DT R23 JANUARY 2025

PART B
HULL AND STABILITY
NR467 B DT R18 JANUARY 2025

PART C
MACHINERY, ELECTRICITY, AUTOMATION AND FIRE PROTECTION
NR467 C DT R18 JANUARY 2025

PART D
SERVICE NOTATIONS
NR467 D DT R18 JANUARY 2025

PART E
SERVICE NOTATIONS FOR OFFSHORE/WIND FARM SERVICE VESSELS AND TUGS
NR467 E DT R09 JANUARY 2025

PART F
ADDITIONAL CLASS NOTATIONS
NR467 F DT R18 JANUARY 2025

BUREAU VERITAS MARINE & OFFSHORE

Tour Alto
4 place des Saisons
92400 Courbevoie - France
+33 (0)1 55 24 70 00

marine-offshore.bureauveritas.com/rules-guidelines

© **2025 BUREAU VERITAS** - All rights reserved

BUREAU VERITAS

© PHOTO ADOBESTOCK.COM

NR467

RULES FOR THE CLASSIFICATION OF STEEL SHIPS

Part C
Machinery, Electricity, Automation and Fire Protection

Chapter 1	Machinery
Chapter 2	Electrical Installations
Chapter 3	Automation
Chapter 4	Fire Protection, Detection and Extinction

January 2025

Table of Content

Chapter 1 Machinery

Section 1 General Requirements

1 General 38

1.1 Application
1.2 Additional requirements
1.3 Documentation to be submitted
1.4 Definitions

2 Design and construction 38

2.1 General
2.2 Materials, welding and testing
2.3 Vibrations
2.4 Ambient conditions - Inclinations
2.5 Ambient conditions - Temperatures
2.6 Ambient conditions - Ship accelerations and motions
2.7 Evaluation of equipment suitability
2.8 Installation and operation
2.9 Power of machinery
2.10 Astern power
2.11 Safety devices
2.12 Fuels

3 Arrangement and installation on board 41

3.1 General
3.2 Floor plating and gratings
3.3 Bolting down
3.4 Safety devices on moving parts
3.5 Gauges
3.6 Ventilation in machinery spaces
3.7 Hot surfaces and fire protection
3.8 Machinery remote control, alarms and safety systems

4 Tests and trials 43

4.1 Works tests
4.2 Trials on board

Section 2 Diesel Engines

1 General 44

1.1 Application
1.2 Documentation flow for diesel engine
1.3 Definitions

2 Design and construction 49

2.1 Materials and welding
2.2 Crankshaft
2.3 Crankcase
2.4 Scavenge manifolds
2.5 Systems
2.6 Starting air system
2.7 Control and monitoring

3 Arrangement and installation 57

3.1 Starting arrangements
3.2 Turning gear
3.3 Trays
3.4 Exhaust gas system

Table of Content

4 Type tests, material tests, workshop inspection and testing, certification 58

4.1 Type testing
4.2 Material and non-destructive tests for engine components
4.3 Factory Acceptance Test
4.4 Certification

Section 3 Pressure Equipment

1 General 70

1.1 Principles
1.2 Application
1.3 Definitions
1.4 Classes
1.5 Applicable Rules
1.6 Documentation to be submitted

2 Design and construction - Scantlings of pressure parts 75

2.1 General
2.2 Materials
2.3 Permissible stresses
2.4 Cylindrical, spherical and conical shells with circular cross-sections subject to internal pressure
2.5 Dished heads subject to pressure on the concave (internal) side
2.6 Dished heads subject to pressure on the convex (external) side
2.7 Flat heads
2.8 Openings and branches (nozzles)
2.9 Regular pattern openings - Tube holes
2.10 Water tubes, superheaters and economiser tubes of boilers
2.11 Additional requirements for fired pressure vessels
2.12 Additional requirements for vertical boilers and fire tube boilers
2.13 Bottles containing pressurised gases
2.14 Heat exchangers

3 Design and construction - Equipment 104

3.1 All pressure vessels
3.2 Boilers and steam generators
3.3 Thermal oil heaters and thermal oil installation
3.4 Special types of pressure vessels
3.5 Other pressure vessels

4 Design and construction - Fabrication and welding 109

4.1 General
4.2 Welding design
4.3 Miscellaneous requirements for fabrication and welding
4.4 Preparation of parts to be welded
4.5 Tolerances after construction
4.6 Preheating
4.7 Post-weld heat treatment
4.8 Welding samples
4.9 Specific requirements for class 1 vessels
4.10 Specific requirements for class 2 vessels
4.11 Specific requirements for class 3 vessels

5 Design and construction - Control and monitoring 120

5.1 Boiler control and monitoring system
5.2 Pressure vessel instrumentation
5.3 Thermal oil heater control and monitoring
5.4 Control and monitoring requirements

6 Additional requirements for shell type exhaust gas heated economizers that may be isolated from the steam plant system 125

6.1 Application
6.2 Design and construction
6.3 Pressure relief
6.4 Pressure indication

6.5 Lagging
6.6 Feed water
6.7 Operating instructions

7 Design requirements for boil-off gas combustion units 126

7.1 Operating cases
7.2 Availability
7.3 Gas combustion equipment
7.4 Gas supply
7.5 Instrumentation and safeties

8 Arrangement and installation 127

8.1 Foundations
8.2 Boilers
8.3 Pressure vessels
8.4 Thermal oil heaters

9 Material test, workshop inspection and testing, certification 128

9.1 Material testing
9.2 Workshop inspections
9.3 Hydrostatic tests
9.4 Certification

Section 4 Steam Turbines

1 General 131

1.1 Application
1.2 Documentation to be submitted

2 Design and construction 131

2.1 Materials
2.2 Design and constructional details
2.3 Welded fabrication
2.4 Control, monitoring and shut-off devices

3 Arrangement and installation 135

3.1 Foundations
3.2 Jointing of mating surfaces
3.3 Piping installation
3.4 Hot surfaces
3.5 Alignment
3.6 Circulating water system
3.7 Gratings
3.8 Drains
3.9 Instruments

4 Material tests, workshop inspection and testing, certification 135

4.1 Material tests
4.2 Inspections and testing during construction
4.3 Certification

Section 5 Gas Turbines

1 General 138

1.1 Application
1.2 Definition of rated power
1.3 Documentation to be submitted

2 Design and Construction 139

2.1 Materials
2.2 Stress analyses
2.3 Design and constructional details
2.4 Welded fabrication
2.5 Control, monitoring and shut-off devices

3 Arrangement and installation 142

3.1 Foundations
3.2 Joints of mating surfaces
3.3 Piping installation
3.4 Hot surfaces
3.5 Alignment
3.6 Gratings
3.7 Drains
3.8 Instruments

4 Material tests, workshop inspection and testing, certification 143

4.1 Type tests - General
4.2 Type tests of turbines not admitted to an alternative inspection scheme
4.3 Type tests of turbines admitted to an alternative inspection scheme
4.4 Material tests
4.5 Inspections and testing during construction
4.6 Certification

5 Additional requirements for dual fuel (DF) gas turbines 147

5.1 Design principles
5.2 Control, alarms and safety systems
5.3 Type tests

Section 6 Gearing

1 General 149

1.1 Application
1.2 Documentation to be submitted

2 Design of gears - Determination of the load capacity of cylindrical gears 152

2.1 Symbols, units, definitions
2.2 Principle
2.3 General influence factors
2.4 Calculation of surface durability
2.5 Calculation of tooth bending strength
2.6 Calculation of scuffing resistance

3 Design of gears - Determination of the load capacity of bevel gears 177

3.1 Symbols, units, definitions
3.2 Principle
3.3 General influence factors
3.4 Calculation of surface durability
3.5 Calculation of tooth bending strength
3.6 Calculation of scuffing resistance

4 Design and construction - except tooth load capacity 190

4.1 Materials
4.2 Teeth
4.3 Wheels and pinions
4.4 Shafts and bearings
4.5 Casings
4.6 Lubrication
4.7 Control and monitoring

5 Installation 194

5.1 General
5.2 Fitting of gears

6 Certification, inspection and testing 194

6.1 General
6.2 Workshop inspection and testing

Table of Content

Section 7 Main Propulsion Shafting

1 General 195

1.1 Application
1.2 Documentation to be submitted

2 Design and construction 196

2.1 Materials
2.2 Shafts - Scantling
2.3 Liners
2.4 Stern tube bearings
2.5 Couplings
2.6 Design of oil control systems for clutches
2.7 Monitoring

3 Arrangement and installation 202

3.1 General
3.2 Protection of propeller shaft against corrosion
3.3 Shaft alignment for ships granted with a notation ESA
3.4 Shaft alignment for ships not granted with a notation ESA

4 Material tests, workshop inspection and testing, certification 204

4.1 Material and non-destructive tests, workshop inspections and testing
4.2 Certification

Section 8 Propellers

1 General 205

1.1 Application
1.2 Definitions
1.3 Documentation to be submitted

2 Design and construction 207

2.1 Materials
2.2 Solid propellers - Blade thickness
2.3 Built-up propellers and controllable pitch propellers
2.4 Skewed propellers
2.5 Ducted propellers
2.6 Features

3 Arrangement and installation 211

3.1 Fitting of propeller on the propeller shaft

4 Testing and certification 214

4.1 Material tests
4.2 Testing and inspection
4.3 Certification

Section 9 Shaft Vibrations

1 General 215

1.1 Application

2 Design of systems in respect of vibrations 215

2.1 Principle
2.2 Modifications of existing plants

3 Torsional vibrations 215

3.1 Documentation to be submitted
3.2 Definitions, symbols and units
3.3 Calculation principles
3.4 Permissible limits for torsional vibration stresses in crankshaft, propulsion shafting and other transmission shafting
3.5 Permissible vibration levels in components other than shafts
3.6 Torsional vibration measurements

4 Bending vibrations 220

4.1 General
4.2 Documentation to be submitted
4.3 Calculation principles
4.4 Bending vibration measurements

5 Axial vibrations 221

5.1 General
5.2 Documentation to be submitted
5.3 Calculation principles
5.4 Axial vibration measurements

Section 10 Piping Systems

1 General 223

1.1 Application
1.2 Documentation to be submitted
1.3 Definitions
1.4 Symbols and units
1.5 Class of piping systems

2 General requirements for design and construction 226

2.1 Materials
2.2 Thickness of pressure piping
2.3 Calculation of high temperature pipes
2.4 Junction of pipes
2.5 Protection against overpressure
2.6 Flexible hoses and expansion joints
2.7 Valves and accessories
2.8 Sea inlets and overboard discharges
2.9 Control and monitoring

3 Welding of steel piping 243

3.1 Application
3.2 General
3.3 Design of welded joints
3.4 Preparation of elements to be welded and execution of welding
3.5 Post-weld heat treatment
3.6 Inspection of welded joints

4 Bending of pipes 247

4.1 Application
4.2 Bending process
4.3 Heat treatment after bending

5 Arrangement and installation of piping systems 248

5.1 General
5.2 Location of tanks and piping system components
5.3 Passage through bulkheads or decks
5.4 Independence of lines
5.5 Prevention of progressive flooding
5.6 Provision for expansion
5.7 Supporting of the pipes
5.8 Protection of pipes
5.9 Valves, accessories and fittings
5.10 Additional arrangements for flammable fluids

6 Bilge systems 254

6.1 Application
6.2 Principle
6.3 Design of bilge systems
6.4 Draining of cargo spaces
6.5 Draining of machinery spaces
6.6 Draining of dry spaces other than cargo holds and machinery spaces
6.7 Bilge pumps

6.8 Size of bilge pipes
6.9 Bilge accessories
6.10 Materials
6.11 Bilge piping arrangement
6.12 Water ingress detection

7 Ballast systems 263

7.1 Principles
7.2 Ballast pumping arrangement
7.3 Ballast water exchange at sea

8 Scuppers and sanitary discharges 266

8.1 Application
8.2 Principle
8.3 Drainage from spaces below the freeboard deck or within enclosed superstructures and deckhouses on the freeboard deck
8.4 Drainage of superstructures or deckhouses not fitted with efficient weathertight doors
8.5 Drainage of enclosed cargo spaces situated on the bulkhead deck or on the freeboard deck
8.6 Drainage of cargo spaces, other than ro-ro spaces, intended for the carriage of motor vehicles with fuel in their tanks for their own propulsion
8.7 Drainage and pumping arrangements for vehicle, special category and ro-ro spaces protected by fixed pressure water-spraying systems
8.8 Arrangement of discharges led overboard
8.9 Summary table of overboard discharge arrangements
8.10 Valves and pipes
8.11 Arrangement of scuppers and sanitary discharge piping

9 Air, sounding and overflow pipes 271

9.1 Air pipes
9.2 Sounding pipes
9.3 Overflow pipes
9.4 Constructional requirements applying to sounding, air and overflow pipes

10 Cooling systems 278

10.1 Application
10.2 Principle
10.3 Design of sea water cooling systems
10.4 Design of fresh water cooling systems
10.5 Design of oil cooling systems
10.6 Control and monitoring
10.7 Arrangement of cooling systems

11 Fuel oil systems 281

11.1 Application
11.2 Principle
11.3 General
11.4 Design of fuel oil filling and transfer systems
11.5 Arrangement of fuel oil tanks and bunkers
11.6 Design of fuel oil tanks and bunkers
11.7 Design of fuel oil heating systems
11.8 Design of fuel oil treatment systems
11.9 Design of fuel supply systems
11.10 Control and monitoring
11.11 Construction of fuel oil piping systems
11.12 Arrangement of fuel oil piping systems

12 Lubricating oil systems 289

12.1 Application
12.2 Principle
12.3 General
12.4 Design of engine lubricating oil systems
12.5 Design of steam turbine lubrication systems

12.6 Design of lubricating oil tanks
12.7 Control and monitoring
12.8 Construction of lubricating oil piping systems

13 Thermal oil systems 292

13.1 Application
13.2 Principle
13.3 General
13.4 Design of thermal oil heaters and heat exchangers
13.5 Design of storage, expansion and draining tanks
13.6 Design of circulation and heat exchange systems
13.7 Control and monitoring
13.8 Construction of thermal oil piping systems
13.9 Thermal oil piping arrangements

14 Hydraulic systems 295

14.1 Application
14.2 Principles
14.3 General
14.4 Design of hydraulic pumps and accessories
14.5 Design of hydraulic tanks and other components
14.6 Control and monitoring

15 Steam systems 297

15.1 Application
15.2 Principle
15.3 Design of steam lines

16 Boiler feed water and condensate systems 298

16.1 Application
16.2 Principle
16.3 Design of boiler feed water systems
16.4 Design of condensate systems
16.5 Control and monitoring
16.6 Arrangement of feed water and condensate piping
16.7 Arrangement of feed water system for shell type exhaust gas heated economizer

17 Compressed air systems 300

17.1 Application
17.2 Principle
17.3 Design of starting air systems
17.4 Design of control and monitoring air systems
17.5 Design of air compressors
17.6 Control and monitoring of compressed air systems
17.7 Materials
17.8 Arrangement of compressed air piping systems

18 Exhaust gas systems 303

18.1 General
18.2 Design of exhaust systems
18.3 Materials
18.4 Arrangement of exhaust piping systems

19 Oxyacetylene welding systems 305

19.1 Application
19.2 Definitions
19.3 Design of oxyacetylene welding systems
19.4 Arrangement of oxyacetylene welding systems

20 Certification, inspection and testing of piping systems 307

20.1 Application
20.2 Type tests of flexible hoses and expansion joints
20.3 Type tests of air pipe closing appliances
20.4 Testing of materials

20.5 Hydrostatic testing of piping systems and their components
20.6 Testing of piping system components during manufacturing
20.7 Inspection and testing of piping systems

Section 11 Exhaust Gas Pollution Prevention System

1 General 315

1.1 Application
1.2 Definitions
1.3 Documents to be submitted

2 Installation requirements 316

2.1 General
2.2 Installation requirements
2.3 Availability
2.4 Arrangement
2.5 Certification, Inspection and testing

3 Storage and use of SCR reductant 318

3.1 Application
3.2 Storage tank
3.3 Ventilation
3.4 Piping
3.5 Materials
3.6 Protection of crew members

4 Chemical treatment fluids used for exhaust gas cleaning systems 319

4.1 Application
4.2 Storage tank
4.3 Ventilation
4.4 Piping
4.5 Exhaust Gas Cleaning Systems discharge water pipeline
4.6 Materials
4.7 Containment of leakage
4.8 Protection of crew members
4.9 Safety measures against the residues which have hazardous properties

5 Storage and use of other substances mentioned in IMDG Code 321

5.1 Application
5.2 Risk analysis
5.3 Containment of leakage
5.4 Storage tank
5.5 Ventilation
5.6 Piping

Section 12 Onboard Carbon Capture and Storage Systems

1 General 323

1.1 Application
1.2 Documentation to be submitted
1.3 Definitions
1.4 Risk analysis

2 Design and construction of the carbon capture and storage system 326

2.1 General
2.2 Materials
2.3 Design and construction of the separation system
2.4 Design and construction of the solvent filling, storage, transfer, cooling and heating systems
2.5 Design and construction of the CO2 separation system
2.6 Design of the CO2 compression, liquefaction and storage systems
2.7 Control and monitoring

3 Arrangement and installation of the solvent components 329

3.1 Solvent tanks and piping system
3.2 Absorbers
3.3 Solvent leakage detection
3.4 Bilge system and scuppers
3.5 Ventilation
3.6 Fire safety

4 Arrangement and installation of the CO2 system components 330

4.1 CO2 tanks
4.2 CO2 vapour detection
4.3 Ventilation

5 Personal protection 331

5.1 Protective equipment
5.2 Emergency equipment

6 Certification and surveys at works 331

6.1 General
6.2 Type approval
6.3 Inspection and testing

Section 13 Ballast Water Management Systems

1 General 333

1.1 Application
1.2 Acronyms
1.3 Definitions
1.4 Documents to be submitted

2 Installation 338

2.1 General requirements
2.2 Location and arrangement of BWMR and chemical substance storage rooms
2.3 Location of chemical substance storage tanks
2.4 Piping systems
2.5 Electrical and automation systems
2.6 Hazardous areas
2.7 Inert gas systems
2.8 Ventilation systems
2.9 Safe locations for venting
2.10 Personal equipment

3 Additional requirements for tankers and offshore service vessels 343

3.1 Application
3.2 Location of BWMS
3.3 Independent BWMS
3.4 Case of tankers where the fore peak ballast tank and other ballast tanks within the cargo area are served by a common piping system
3.5 Isolation means
3.6 Sampling arrangements
3.7 Acceptability of single BWMS installation on tankers

4 Special requirements for BWMS generating dangerous gas or dealing with dangerous liquids 349

4.1 Application
4.2 BWMS involving the generation of a dangerous gas
4.3 Piping conveying dangerous gas or liquid
4.4 Handling and storage of chemicals and preparations used to treat ballast water

5 Certification 351

5.1 Type approval and design review
5.2 Risk assessment
5.3 Inspection and testing

Table of Content

Section 14 Steering Gear

1 General 354

1.1 Application
1.2 Documentation to be submitted
1.3 Definitions
1.4 Symbols

2 Design and construction 357

2.1 General
2.2 Strength, performance and power operation of the steering gear
2.3 Control of the steering gear
2.4 Availability
2.5 Mechanical components
2.6 Hydraulic system
2.7 Electrical systems
2.8 Alarms and indications

3 Design and construction - Requirements for ships equipped with several rudders 368

3.1 Principle
3.2 Synchronisation

4 Design and construction - Requirements for ships equipped with thrusters as steering means 368

4.1 Principle
4.2 Steering arrangements
4.3 Use of water-jets

5 Arrangement and installation 370

5.1 Steering gear room arrangement
5.2 Rudder actuator installation
5.3 Overload protections
5.4 Means of communication
5.5 Operating instructions

6 Certification, inspection and testing 371

6.1 Type tests of hydraulic pumps
6.2 Testing of materials
6.3 Inspection and tests during manufacturing
6.4 Inspection and tests after completion

Section 15 Thrusters

1 General 373

1.1 Application
1.2 Definitions
1.3 Thrusters intended for propulsion
1.4 Documentation to be submitted

2 Design and Construction 375

2.1 Materials
2.2 Transverse thrusters and azimuth thrusters
2.3 Water-jets
2.4 Alarm, monitoring and control systems

3 Testing and certification 377

3.1 Material tests
3.2 Testing and inspection
3.3 Certification

Section 16 Refrigerating Installations

1 General 378

1.1 Application

2 Minimum design requirements 378

2.1 Refrigerating installation components
2.2 Refrigerants
2.3 Special requirements for ammonia (R717)

Section 17 Turbochargers

1 General 381

1.1 Application
1.2 Documentation to be submitted

2 Design and construction 382

2.1 General
2.2 Containment
2.3 Disc-shaft shrinkage fit
2.4 Alarms and monitoring

3 Certification, inspection and testing 383

3.1 Type tests
3.2 Workshop inspections and testing
3.3 Certification

Section 18 Tests on Board

1 General 385

1.1 Application
1.2 Purpose of shipboard tests
1.3 Documentation to be submitted

2 General requirements for shipboard tests 385

2.1 Trials at the moorings
2.2 Sea trials

3 Shipboard tests for machinery 385

3.1 Conditions of sea trials
3.2 Starting from dead ship conditions
3.3 Navigation and manoeuvring tests
3.4 Tests of boilers
3.5 Tests of diesel engines
3.6 Test of air starting system for main and auxiliary engines
3.7 Tests of steam turbines
3.8 Tests of gas turbines
3.9 Tests of electric propulsion system
3.10 Tests of gears
3.11 Tests of main propulsion shafting and propellers
3.12 Tests of piping systems
3.13 Tests of steering gear

4 Inspection of machinery after sea trials 392

4.1 General
4.2 Diesel engines

Appendix 1 Calculation for Internal Combustion Engine Crankshafts

1 General 395

1.1 Application
1.2 Documentation to be submitted
1.3 Principles of calculation

2 Calculation of alternating stresses 399

2.1 Calculation of alternating stresses due to bending moments and radial forces
2.2 Calculation of alternating torsional stresses

3 Evaluation of stress concentration factors (SCF) 402

3.1 General

4	Additional bending stresses	404
	4.1 General	
5	Calculation of equivalent alternating stress	405
	5.1 General 5.2 Equivalent alternating stresses	
6	Calculation of fatigue strength	405
	6.1 General	
7	Acceptability criteria	406
	7.1	
8	Calculation of shrink-fits of semi-built crankshaft	406
	8.1 General 8.2 Maximum permissible hole in journal pin 8.3 Necessary minimum oversize of shrink-fit 8.4 Maximum permissible oversize of shrink-fit	
9	Guidance for calculation of stress concentration factors in the web fillet radii of crankshafts by utilizing FEM	407
	9.1 General 9.2 Model requirements 9.3 Load cases	
10	Guidance for evaluation of fatigue tests	412
	10.1 Introduction 10.2 Evaluation of test results 10.3 Small specimen testing 10.4 Full size testing 10.5 Use of existing results for similar crankshafts	
11	Guidance for calculation of surface treated fillets and oil bore outlets	418
	11.1 Introduction 11.2 Definition of surface treatment 11.3 Calculation principles 11.4 Introduction hardening 11.5 Nitriding 11.6 Cold forming	
12	Calculation of stress concentration factors in the oil bore outlets of crankshafts through utilization of the finite element method	425
	12.1 General 12.2 Model requirements 12.3 Load cases and assessment of stress	

Appendix 2 Reciprocating Internal Combustion Engines Fuelled by Natural Gas

1	General	428
	1.1 Scope 1.2 Definitions 1.3 Documents to be submitted 1.4 Risk analysis	
2	Design Requirements	431
	2.1 General Principles 2.2 Gas piping	
3	Specific design requirements	434
	3.1 DF Engines 3.2 GF engines 3.3 Pre-mixed engines 3.4 Two-stroke engines	

4 Type testing, factory acceptance tests and shipboard trials 434

4.1 Type Testing
4.2 Factory acceptance test
4.3 Shipboard trials

5 Certification of Engine Components 437

5.1 General
5.2 Additional requirements for DF and GF engines

Appendix 3 Plastic Pipes

1 General 439

1.1 Application
1.2 Use of plastic pipes
1.3 Specifications
1.4 Terms and conditions

2 General requirements 440

2.1 Strength
2.2 Axial strength
2.3 Impact resistance
2.4 Temperature
2.5 Requirements depending on service and/or location

3 Material approval and quality control during manufacture 444

3.1 General

4 Arrangement and installation of plastic pipes 444

4.1 Supports
4.2 Expansion
4.3 External loads
4.4 Strength of connections
4.5 Installation of conductive pipes
4.6 Application of fire protection coatings
4.7 Penetration of fire divisions and watertight bulkheads or decks
4.8 Control during installation
4.9 Testing after installation on board

5 Test specification for plastic pipes 446

5.1 Scope
5.2 Documentation
5.3 Testing

Appendix 4 Type Testing Procedure for Crankcase Explosion Relief Valves

1 General 449

1.1 Scope
1.2 Recognised standards
1.3 Purpose
1.4 Approval

2 Type testing procedure 449

2.1 Test facilities
2.2 Explosion test process
2.3 Valves to be tested
2.4 Method
2.5 Assessment and records
2.6 Design series qualification
2.7 Report

Appendix 5 Type Approval of Mechanical Joints

1 General 453

1.1 Scope
1.2 Documentation
1.3 Materials

2 Testing, procedures and requirements 453

2.1 Aim of the tests
2.2 Test fluid
2.3 Test program
2.4 Selection of test specimen
2.5 Mechanical joint assembly
2.6 Test results acceptance criteria
2.7 Methods of tests

Appendix 6 Special Approval of Alloy Steel used for Intermediate Shaft Material

1 General 459

1.1 Application
1.2 Torsional fatigue test
1.3 Cleanliness requirements
1.4 Inspection

Appendix 7 Exhaust Gas Back Pressure Analysis

1 General 461

1.1 Scope
1.2 Required analysis
1.3 Input data
1.4 Exhaust gas back pressure assessment

Appendix 8 Type Testing Procedure of Explosion Relief Devices for Combustion Air Inlet and Exhaust Gas Manifolds of I.C. Engines Using Gas as Fuel

1 General 463

1.1 Scope
1.2 Definitions
1.3 Documentation to be submitted

2 Tests 464

2.1 Test specimens of ERD
2.2 Test for Demonstration of opening pressure
2.3 Explosion test
2.4 Check of ERD components

3 Assessment and approval 466

3.1 Assessment
3.2 Approval

Chapter 2 Electrical Installations

Section 1 General

1 Application 468

1.1 General
1.2 References to other regulations and standards

2 Documentation to be submitted 468

2.1

3 Definitions 469

3.1 General
3.2 Black out situation
3.3 Certified safe-type equipment
3.4 Dead ship condition
3.5 Distribution board
3.6 Earthing
3.7 Emergency condition
3.8 Emergency source of electrical power
3.9 Emergency switchboard
3.10 Environmental categories
3.11 Essential services
3.12 Final sub-circuit
3.13 Hazardous areas
3.14 High fire risk areas
3.15 High-voltage systems
3.16 Insulation
3.17 Low-voltage systems
3.18 Main generating station
3.19 Main source of electrical power
3.20 Main switchboard
3.21 Normal operational and habitable condition
3.22 Safety voltage
3.23 Section boards
3.24 Services for habitability
3.25 Voltage and frequency transient

4 Type approved components 474

4.1 General

Section 2 General Design Requirements

1 Environmental conditions 475

1.1 General
1.2 Ambient air temperatures
1.3 Humidity
1.4 Sea water temperatures
1.5 Salt mist
1.6 Inclinations
1.7 Vibrations

2 Quality of power supply 476

2.1 General
2.2 a.c. distribution systems
2.3 d.c. distribution systems
2.4 Harmonic distortions

3 Electromagnetic susceptibility 477

3.1

4 Materials 478

4.1 General
4.2 Insulating materials for windings
4.3 Insulating materials for cables

5 Construction 478

5.1 General
5.2 Degree of protection of enclosures

6 Protection against explosion hazard 479

6.1 Protection against explosive gas or vapour atmosphere hazard
6.2 Protection against combustible dust hazard

Table of Content

Section 3 System Design

1 Supply systems and characteristics of the supply 480

1.1 Supply systems
1.2 Maximum voltages

2 Sources of electrical power 481

2.1 General
2.2 Main source of electrical power
2.3 Emergency source of electrical power
2.4 Use of emergency generator in port

3 Distribution 485

3.1 Earthed distribution systems
3.2 Insulated distribution systems
3.3 Distribution systems with hull return
3.4 General requirements for distribution systems
3.5 Main distribution of electrical power
3.6 Emergency distribution of electrical power
3.7 Shore supply
3.8 Supply of motors
3.9 Specific requirements for special power services
3.10 Power supply to heaters
3.11 Reefer containers
3.12 Power supply to final sub-circuits: socket outlet and lighting
3.13 Navigation lights
3.14 General emergency alarm system
3.15 Public address system
3.16 Combined general emergency alarm-public address system
3.17 Control and indication circuits
3.18 Power supply to the speed control systems of main propulsion engines
3.19 Power supply to the speed control systems of generator sets
3.20 Installation of water-based local application fire-fighting systems (FWBLAFFS)
3.21 Integrated cargo and ballast systems on tankers
3.22 Harmonic distortion for ship electrical distribution system including harmonics filters

4 Degrees of protection of the enclosures 492

4.1 General
4.2 Installation of electrical and electronic equipment in engine rooms protected by fixed water-based local application fire-fighting systems (FWBLAFFS)

5 Diversity (demand) factors 494

5.1 General

6 Environmental categories of the equipment 494

6.1 Environmental categories

7 Electrical protection 495

7.1 General requirements for overcurrent protection
7.2 Short-circuit currents
7.3 Selection of equipment
7.4 Protection against short-circuit
7.5 Continuity of supply and continuity of service
7.6 Protection against overload
7.7 Localisation of overcurrent protection
7.8 Protection of generators
7.9 Protection of circuits
7.10 Protection of motors
7.11 Protection of storage batteries
7.12 Protection of shore power connection
7.13 Protection of measuring instruments, pilot lamps and control circuits
7.14 Protection of transformers
7.15 Lightning protection

8	System components	500
	8.1 General	
9	Electrical cables	500
	9.1 General	
	9.2 Choice of insulation	
	9.3 Choice of protective covering	
	9.4 Cables in refrigerated spaces	
	9.5 Cables in areas with a risk of explosion	
	9.6 Cables in circuits required to be operable under fire condition	
	9.7 Cables for submerged bilge pumps	
	9.8 Internal wiring of switchboards and other enclosures for equipment	
	9.9 Current carrying capacity of cables	
	9.10 Minimum nominal cross-sectional area of conductors	
	9.11 Choice of cables	
10	Electrical installations in hazardous areas	507
	10.1 General	
	10.2 Electrical equipment	
	10.3 Certified safe type documentation	
	10.4 Marking	
	10.5 Electrical cables	
	10.6 Electrical installations in battery rooms	
	10.7 Electrical installations in paint stores or enclosed spaces leading to paint stores	
	10.8 Electrical installations in stores for welding gas (acetylene) bottles	
	10.9 Specific ships or installations	

Section 4 Rotating Machines

1	Constructional requirements for generators and motors	513
	1.1 Mechanical construction	
	1.2 Sliprings, commutators and brushes	
	1.3 Terminal connectors	
	1.4 Electrical insulation	
2	Special requirements for generators	513
	2.1 Prime movers, speed governors and overspeed protection	
	2.2 A.c. generators	
	2.3 Approval of generating sets	
3	Testing of rotating machines	514
	3.1 General	
	3.2 Shaft material	
	3.3 Tests	
4	Description of test	516
	4.1 Technical documentation and visual inspection	
	4.2 Insulation resistance measurement	
	4.3 Winding resistance measurement	
	4.4 Verification of the voltage regulation	
	4.5 Rated load test and temperature rise measurements	
	4.6 Overcurrent/overtorque test	
	4.7 Verification of the steady short circuit current	
	4.8 Overspeed test	
	4.9 Dielectric strength test	
	4.10 No load test	
	4.11 Verification of degree of protection	
	4.12 Verification of bearings	
5	Additional tests for rotating machines used as propulsion motor or thruster	519
	5.1 General	

Table of Content

Section 5 Transformers

1 Constructional requirements 520

1.1 Construction
1.2 Terminals
1.3 Voltage variation, short-circuit conditions and parallel operation
1.4 Electrical insulation and temperature rise

2 Testing 521

2.1 General
2.2 Tests on transformers
2.3 Insulation tests

Section 6 Semiconductor Converters

1 Constructional requirements 523

1.1 Construction
1.2 Protection
1.3 Parallel operation with other power sources
1.4 Temperature rise
1.5 Creepage and clearance distances

2 Requirements for uninterruptible power system (UPS) units as alternative and/or transitional power 524

2.1 Definitions
2.2 Design and construction
2.3 Location
2.4 Performance

3 Testing 525

3.1 General
3.2 Tests on converters
3.3 Additional testing and survey for uninterruptible power system (UPS) units as alternative and/or transitional power
3.4 Insulation test

Section 7 Battery Energy Storage Systems and Chargers

1 Batteries 527

1.1 General
1.2 Definitions
1.3 Battery pack
1.4 Battery maintenance
1.5 Testing and certification process for batteries
1.6 Battery cells
1.7 Battery packs and associated BMS
1.8 Equipment used in battery systems

2 Non Li-ion batteries 530

2.1 Vented batteries
2.2 Valve-regulated batteries

3 Li-ion batteries 530

3.1 Li Ion batteries above 20kWh
3.2 Li Ion batteries below 20kWh
3.3 Li Ion batteries used as emergency source or transitional source

4 Chargers 531

4.1 General
4.2 Testing

5 Requirements for the additional service feature battery systems 532

5.1 Application
5.2 Documents to be submitted
5.3 System considered

5.4 Qualification of the battery system
5.5 General requirements
5.6 Availability of power
5.7 Test and certification process for batteries

Section 8 Switchgear and Controlgear Assemblies

1 Constructional requirements for main and emergency switchboards 534

1.1 Construction
1.2 Documents to be submitted
1.3 Busbars and bare conductors
1.4 Internal wiring
1.5 Switchgear and controlgear
1.6 Auxiliary circuits
1.7 Instruments
1.8 Synchronisation of generators

2 Constructional requirements for section boards and distribution boards 537

2.1 Construction

3 Testing 537

3.1 General
3.2 Visual Inspection
3.3 Functional Testing
3.4 High-voltage test
3.5 Measurement of insulation resistance

Section 9 Cables

1 General 539

1.1 Type approval

2 Constructional requirements 539

2.1 Construction
2.2 Conductors
2.3 Insulating materials
2.4 Inner covering, fillers and binders
2.5 Protective coverings (armour and sheath)
2.6 Identification

3 Testing 540

3.1 Type tests
3.2 Routine tests

Section 10 Miscellaneous Equipment

1 Switchgear and controlgear, protective devices 541

1.1 General
1.2 Circuit-breakers
1.3 Protection devices

2 Electrical slip ring assemblies 541

2.1 General requirements
2.2 Construction
2.3 Testing
2.4 Description of tests

3 Lighting fittings 544

3.1 Applicable requirements
3.2 Construction

4 Accessories 544

4.1 Applicable requirements
4.2 Construction

5 Plug-and-socket connections 544

5.1 Applicable requirements

6 Heating and cooking appliances 545

6.1 Applicable requirements
6.2 General
6.3 Space heaters
6.4 Cooking appliances
6.5 Fuel oil and lube oil heaters
6.6 Water heaters

Section 11 Location

1 General 546

1.1 Location
1.2 Areas with a risk of explosion
1.3 Electrical equipment in environmentally controlled spaces

2 Main electrical system 546

2.1 Location in relation to the emergency system
2.2 Main switchboard

3 Emergency electrical system 547

3.1 Spaces for the emergency source
3.2 Location in relation to the main electrical system
3.3 Emergency switchboard
3.4 Emergency battery

4 Distribution boards 547

4.1 Distribution boards for cargo spaces and similar spaces
4.2 Distribution board for navigation lights

5 Cable runs 547

5.1 General
5.2 Location of cables in relation to the risk of fire and overheating
5.3 Location of cables in relation to electromagnetic interference
5.4 Services with a duplicate feeder
5.5 Emergency circuits
5.6 Electrical distribution in passenger ships

6 Storage batteries 548

6.1 General requirements for arrangements
6.2 Arrangement of large vented batteries
6.3 Arrangement of moderate vented batteries
6.4 Arrangement of small vented batteries
6.5 Arrangement of Li-ion batteries above 20kWh
6.6 General requirements for ventilation
6.7 Additional requirement for vented batteries ventilation
6.8 Additional requirement for valve regulated batteries ventilation
6.9 Additional requirement for Li-Ion batteries above 20kWh ventilation
6.10 Hazardous area classification

Section 12 Installation

1 General 552

1.1 Protection against injury or damage caused by electrical equipment
1.2 Protection against damage to electrical equipment
1.3 Accessibility

2 Earthing of non-current carrying parts 552

2.1 Parts which are to be earthed
2.2 Methods of earthing
2.3 Earthing connections

2.4 Connection to the ship's structure
2.5 Earthed distribution systems
2.6 Aluminium superstructures

3 Rotating machines 554

3.1

4 Semiconductor converters 554

4.1 Semiconductor power converters

5 Batteries 554

5.1 Vented batteries
5.2 Li Ion batteries above 20kWh

6 Switchgear and controlgear assemblies 555

6.1 Main switchboard
6.2 Emergency switchboard
6.3 Section boards and distribution boards

7 Cables 555

7.1 General
7.2 Radius of bend
7.3 Fixing of cables
7.4 Mechanical protection
7.5 Penetrations of bulkheads and decks
7.6 Expansion joints
7.7 Cables in closed pipes or conduits
7.8 Cables in casings or trunking and conduits with removable covers
7.9 Cable ends
7.10 Joints and tappings (branch circuit)
7.11 Earthing and continuity of metal coverings of cables
7.12 Earthing and continuity of metal pipes, conduits and trunking or casings
7.13 Precautions for single-core cables for a.c.
7.14 Cables in refrigerated spaces
7.15 Cables in areas with a risk of explosion
7.16 Cables and apparatus for services required to be operable under fire conditions
7.17 Cables in the vicinity of radio equipment
7.18 Cables for submerged bilge pumps
7.19 Cable trays/protective casings made of plastics materials
7.20 Cables in environmentally controlled spaces

8 Various appliances 562

8.1 Lighting fittings
8.2 Heating appliances
8.3 Heating cables and tapes or other heating elements

Section 13 High-voltage Installations

1 General 563

1.1 Field of application
1.2 Nominal system voltage
1.3 High-voltage, low-voltage segregation

2 System design 563

2.1 Distribution
2.2 Degrees of protection
2.3 Insulation
2.4 Protection

3 Rotating machinery 564

3.1 Stator windings of generators
3.2 Temperature detectors
3.3 Tests

4 Power transformers 565

4.1 General

5 Cables 565
5.1 General
6 Switchgear and controlgear assemblies 565
6.1 General
6.2 Construction
6.3 Auxiliary systems
6.4 High-voltage test
7 Installation 566
7.1 Electrical equipment
7.2 Cables

Section 14 Electric Propulsion Plant
1 General 568
1.1 Applicable requirements
1.2 Operating conditions
2 Design of the propulsion plant 568
2.1 General
2.2 Power supply
2.3 Auxiliary machinery
2.4 Electrical Protection
2.5 Excitation of synchronous electric propulsion motor
3 Contruction of rotating machines, semiconductor converters and braking resistors 569
3.1 Ventilation
3.2 Protection against moisture and condensate
3.3 Rotating machines
3.4 Semiconductor converters
3.5 Braking resistors
4 Control and monitoring 570
4.1 General
4.2 Power plant control systems
4.3 Indicating instruments
4.4 Alarm system
4.5 Reduction of power
5 Installation 572
5.1 Ventilation of spaces
5.2 Cable runs
6 Tests 572
6.1 Test of rotating machines
6.2 Test of braking resistors
7 Specific requirements for PODs 573
7.1 General
7.2 Electrical slip ring assemblies
7.3 Electric motor
7.4 Instrumentation and associated devices
7.5 Additional tests and tests on board

Section 15 Testing
1 General 574
1.1 Rule application
1.2 Insulation-testing instruments

2 Insulation resistance 574

2.1 Lighting and power circuits
2.2 Internal communication circuits
2.3 Switchboards
2.4 Generators and motors

3 Earth 574

3.1 Electrical constructions
3.2 Metal-sheathed cables, metal pipes or conduits

4 Operational tests 575

4.1 Generating sets and their protective devices
4.2 Switchgear
4.3 Harmonic filters
4.4 Consuming devices
4.5 Communication systems
4.6 Installations in areas with a risk of explosion
4.7 Voltage drop
4.8 Batteries

Appendix 1 Indirect Test Method for Synchronous Machines

1 General 577

1.1 Test method

Appendix 2 Indirect Test Method for Induction Machines (Static Torque Method)

1 General 579

1.1 Test method

Chapter 3 Automation

Section 1 General Requirements

1 General 581

1.1 Field of application
1.2 Regulations and standards
1.3 Definitions
1.4 General

2 Documentation 582

2.1 Documents to be submitted
2.2 Documents for type approval of equipment

3 Environmental and supply conditions 583

3.1 General
3.2 Power supply conditions

4 Materials and construction 583

4.1 General

Section 2 Design Requirements

1 General 584

1.1

2 Power supply of automation systems 584

2.1

3 Control systems 584

3.1 General
3.2 Local control
3.3 Remote control systems
3.4 Automatic control systems

4 Control of propulsion machinery 585

4.1 Application
4.2 Remote control
4.3 Remote control from navigating bridge
4.4 Remote control from navigating bridge for gas fueled ship
4.5 Automatic control
4.6 Automatic control of propulsion and manoeuvring units
4.7 Clutches
4.8 Brakes

5 Communications 587

5.1 Communications between navigating bridge and machinery space
5.2 Engineers' alarm

6 Remote control of valves 587

6.1

7 Alarm system 588

7.1 General requirements
7.2 Alarm functions

8 Safety system 588

8.1 Design
8.2 Function
8.3 Shutdown
8.4 Standby systems
8.5 Testing

Section 3 Computer Based Systems

1 General requirements 590

1.1 Scope
1.2 Exclusion
1.3 References
1.4 Structure
1.5 Definition of abbreviations and terminology
1.6 Documentation to be submitted
1.7 Test witnessing and survey

2 Approval of system and components 594

2.1 System certification
2.2 Type approval of computer-based systems

3 System categories 594

3.1 System category definitions
3.2 Scope of verification by the Society
3.3 System category examples

4 Requirements on development and certification of computer-based system 595

4.1 General requirement
4.2 Requirements on the System Supplier
4.3 Requirements on the Systems Integrator

5 Requirements on maintenance of computer-based systems 599

5.1 Requirements on the Owner
5.2 Requirements on the Systems Integrator
5.3 Requirements on the System Supplier

6 Management of change 600

6.1 General
6.2 Documented change management procedures
6.3 Agreement between relevant stakeholders
6.4 Approved software to be under change management
6.5 Unique identification of system and software versions
6.6 Handling of software master files
6.7 Backup and restoration of onboard software
6.8 Impact analysis before change is made
6.9 Roll-back in case of failed software changes
6.10 Verification and validation of system changes
6.11 Change records
6.12 Verification of change management by the Society

7 Technical requirements on computer-based systems 601

7.1 Reporting of system and software identification and version
7.2 Data links
7.3 Verification of technical requirements by the Society
7.4 Requirements for hardware regarding construction
7.5 Response time
7.6 Human-Machine Interface (HMI)
7.7 Integrated systems

8 Additional service feature SW-Registry 604

8.1 Software registry
8.2 Software inventory
8.3 Logical map of networks
8.4 Inventory of integrated systems components
8.5 Cyber security events

Section 4 Constructional Requirements

1 General 608

1.1 General
1.2 Materials
1.3 Component design
1.4 Environmental and supply conditions

2 Electrical and/or electronic systems 608

2.1 General
2.2 Electronic system
2.3 Electrical system

3 Pneumatic systems 609

3.1

4 Hydraulic systems 609

4.1

5 Automation consoles 609

5.1 General
5.2 Indicating instruments
5.3 VDU's and keyboards

Section 5 Installation Requirements

1 General 611

1.1

2 Sensors and components 611

2.1 General
2.2 Temperature elements
2.3 Pressure elements
2.4 Level switches

3 Cables 611
3.1 Installation
3.2 Cable terminations
4 Pipes 612
4.1
5 Automation consoles 612
5.1 General

Section 6 Testing
1 General 613
1.1 General
2 Type approval 613
2.1 General
2.2 Hardware type approval
2.3 Software type approval
2.4 Loading instruments
2.5 Oil mist detection system
3 Acceptance testing 622
3.1 General
3.2 Hardware testing
3.3 Software testing
4 Onboard tests 622
4.1 General

Appendix 1 Type Testing Procedure for Crankcase Oil Mist Detection and Alarm Equipment
1 General 623
1.1 Scope
1.2 Reference
1.3 Purpose
1.4 Test facilities
2 Testing 623
2.1 Equipment testing
2.2 Functional tests
2.3 Detectors and alarm equipment to be tested
2.4 Method
2.5 Assessment
2.6 Design series qualification
2.7 Test report
2.8 Acceptance

Chapter 4 Fire Protection, Detection and Extinction

Section 1 General
1 Application 628
1.1 General
1.2 National regulations
1.3 Applicable requirements depending on ship type
1.4 Documentation to be submitted
1.5 Type approved products

Table of Content

2 Definitions 630

2.1 A class divisions
2.2 Accommodation spaces
2.3 Atriums
2.4 B class divisions
2.5 Bulkhead decks
2.6 C class divisions
2.7 Cabin balconies
2.8 Calorific value
2.9 Cargo ship
2.10 Cargo spaces
2.11 Central control station
2.12 Chemical tankers
2.13 Closed ro-ro spaces
2.14 Closed vehicle spaces
2.15 Combination carriers
2.16 Continuous B class ceilings or linings
2.17 Continuously manned central control stations
2.18 Control stations
2.19 Dangerous goods
2.20 Deadweight
2.21 Fire damper
2.22 Fire Test Procedures Code
2.23 Gas carriers
2.24 Helicopter facility
2.25 Helicopter landing area
2.26 Helideck
2.27 Lightweight
2.28 Low flame-spread
2.29 Machinery spaces
2.30 Machinery spaces of category A
2.31 Main vertical zones
2.32 Non-combustible material
2.33 Non-sparking fan
2.34 Oil fuel unit
2.35 Open ro-ro spaces
2.36 Open vehicle spaces
2.37 Passenger ship
2.38 Public spaces
2.39 Rooms containing furniture and furnishings of restricted fire risk
2.40 Ro-ro passenger ship
2.41 Ro-ro spaces
2.42 Safety centre
2.43 Sauna
2.44 Semi-enclosed space
2.45 Service spaces
2.46 Smoke damper
2.47 Special category spaces
2.48 Standard fire test
2.49 Steel or other equivalent material
2.50 Tanker
2.51 Vehicle carrier
2.52 Vehicle spaces
2.53 Weather decks
2.54 Winching area

Section 2 Prevention of Fire

1 Probability of ignition 638

1.1 Arrangements for fuel oil, lubrication oil and other flammable oils
1.2 Arrangements for gaseous fuel for domestic purposes
1.3 Miscellaneous items of ignition sources and ignitability

2 Fire growth potential 638
2.1 Control of air supply and flammable liquid to the space
2.2 Fire protection materials
3 Smoke generation potential and toxicity 641
3.1 Paints, varnishes and other finishes
3.2 Primary deck coverings

Section 3 Suppression of Fire: Detection and Alarm
1 General 642
1.1 Passenger ships
1.2 Minimum number of detectors
2 Initial and periodical tests 642
2.1 General
3 Protection of machinery spaces 642
3.1 Installation
3.2 Design
4 Protection of accommodation and service spaces and control stations 643
4.1 Application
4.2 Smoke detectors in accommodation spaces
4.3 Requirements for passenger ships carrying more than 36 passengers
4.4 Requirements for passenger ships carrying not more than 36 passengers
4.5 Protection of atriums
4.6 Protection of cabin balconies on passenger ships
4.7 Cargo ships
5 Protection of cargo spaces 644
5.1 Application and general requirements
6 Manually operated call points 644
6.1 General requirements
7 Inspection hatches 644
7.1 Application
7.2 Inspection hatches
8 Fire alarm signalling systems 644
8.1 Application
8.2 Control panel
8.3 Passenger ships carrying more than 36 passengers
8.4 Special alarm
9 Protection of battery rooms 645
9.1 Li-ion batteries above 20kWh

Section 4 Suppression of Fire: Control of Smoke Spread
1 General 646
1.1 Application
2 Protection of control stations outside machinery spaces 646
2.1 General
3 Release of smoke from machinery spaces 646
3.1 Release of smoke
3.2 Controls
4 Draught stops 646
4.1

5 Smoke extraction systems 646

5.1 Atriums

Section 5 Suppression of Fire: Containment of Fire

1 Thermal and structural boundaries 647

1.1 Application
1.2 Thermal and structural subdivision
1.3 Passenger ships
1.4 Cargo ships except tankers
1.5 Tankers

2 Penetrations in fire-resisting divisions and prevention of heat transmission 662

2.1 Penetrations in A class divisions
2.2 Penetrations in B class divisions
2.3 Pipes penetrating A or B class divisions
2.4 Prevention of heat transmission

3 Protection of openings in fire-resisting divisions 662

3.1 Application
3.2 Openings in bulkheads and decks
3.3 Doors in fire-resisting divisions

4 Protection of openings in machinery space boundaries 665

4.1 Application
4.2 Protection of openings in machinery space boundaries

5 Protection of cargo space boundaries 665

5.1 Application
5.2 Passenger ships carrying more than 36 passengers
5.3 Indicators

6 Ventilation systems 665

6.1 Application
6.2 General
6.3 Arrangement of ducts
6.4 Details of fire dampers and duct penetrations
6.5 Ventilation systems for passenger ships carrying more than 36 passengers
6.6 Exhaust ducts from galley ranges
6.7 Ventilation rooms serving machinery spaces of category A containing internal combustion machinery
6.8 Ventilation systems for laundries in passenger ships carrying more than 36 passengers

Section 6 Suppression of Fire: Fire Fighting

1 Water supply systems 670

1.1 General
1.2 Fire mains and hydrants
1.3 Fire pumps
1.4 Fire hoses and nozzles

2 Portable fire extinguishers 674

2.1 Type and design
2.2 Arrangement of fire extinguishers

3 Fixed fire-extinguishing systems 674

3.1 Types of fixed fire-extinguishing systems
3.2 Closing appliances for fixed gas fire-extinguishing systems
3.3 Storage rooms of fire-extinguishing medium
3.4 Water pumps for other fire-extinguishing systems

4 Fire-extinguishing arrangements in machinery spaces 675

4.1 Machinery spaces arrangement
4.2 Machinery spaces containing oil-fired boilers or oil fuel units
4.3 Machinery spaces of category A containing internal combustion machinery

4.4 Machinery spaces containing steam turbines or enclosed steam engines
4.5 Other machinery spaces
4.6 Additional requirements for passenger ships
4.7 Fixed local application fire-extinguishing systems

5 Fire-extinguishing arrangements in control stations, accommodation and service spaces 678

5.1 Sprinkler and water-spray systems in passenger ships
5.2 Sprinkler systems for cargo ships
5.3 Spaces containing flammable liquid
5.4 Deep-fat cooking equipment

6 Fire-extinguishing arrangements in cargo spaces 678

6.1 Fixed gas fire-extinguishing systems for general cargo
6.2 Fixed gas fire-extinguishing systems for dangerous goods
6.3 Firefighting for ships designed to carry containers on or above the weather deck

7 Fire-extinguishing arrangements for ballast water management rooms 679

7.1 Fixed fire-extinguishing system
7.2 Portable fire-fighting equipment

8 Fire-extinguishing arrangements for battery rooms 680

8.1 Li Ion-type batteries above 20kWh

Section 7 Suppression of Fire: Structural Integrity

1 Application 681

1.1 General

2 Material of hull, superstructures, structural bulkheads, decks and deckhouses 681

2.1 General

3 Structure of aluminium alloy 681

3.1 General

4 Machinery spaces of category A 681

4.1 Crowns and casings
4.2 Floor plating

5 Materials of overboard fittings 681

5.1 General

6 Protection of cargo tank structure against pressure or vacuum 682

6.1 Reference to Part D

Section 8 Escape

1 Notification of crew and passengers 683

1.1 Application
1.2 General emergency alarm system
1.3 Special alarm to summon the crew
1.4 Public address systems

2 Means of escape 683

2.1 General requirements
2.2 Means of escape from control stations, accommodation spaces and service spaces
2.3 Means of escape from machinery spaces
2.4 Means of escape on passenger ships from special category and open ro-ro spaces to which any passengers carried can have access
2.5 Means of escape from ro-ro spaces
2.6 Additional requirements for ro-ro passenger ships

Section 9 Fire Control Plans

1 Application 689

1.1 General

2 Fire control plans 689

2.1 Compilation of the fire control plans
2.2 Location of the fire control plans

Section 10 Helicopter Facilities

1 General 691

1.1 Application

2 Structure 691

2.1 Construction of steel or other equivalent materials
2.2 Construction of aluminium or other low melting point metals
2.3 Means of escape

3 Fire-fighting appliances 691

3.1 General
3.2 Drainage facilities

4 Helicopter refuelling and hangar facilities (if fitted) 692

4.1 Helicopter fuel system and refuelling facilities
4.2 Arrangement of hangar facilities and spaces containing the refuelling installations

5 Occasional and emergency helicopter operations 692

5.1 General

6 Operations manual 693

6.1 General

Section 11 Fuel for Auxiliary Vehicles

1 General 694

1.1 Application
1.2 Definitions
1.3 Segregation
1.4 Storage arrangement
1.5 Vapour detection
1.6 Marking and instructions

2 Jettisonable fuel tanks 695

2.1 Storage arrangement
2.2 Tank design

3 Fixed fuel installations 696

3.1 Tank design
3.2 Tank location and protection
3.3 Cofferdams
3.4 Piping
3.5 Drainage
3.6 Fuel handling
3.7 Filling station
3.8 Refuelling station

4 Prevention of explosion 699

4.1 Electrical bonding
4.2 Source of ignition
4.3 Hazardous areas
4.4 Ventilation of hazardous spaces
4.5 Ventilation and door openings of non-hazardous spaces

Section 12 Carriage of Dangerous Goods

1 General requirements 703

1.1 Application

2 Special requirements 703

2.1 General
2.2 Water supplies
2.3 Sources of ignition
2.4 Detection system
2.5 Ventilation arrangement
2.6 Bilge pumping
2.7 Personnel protection
2.8 Portable fire extinguishers
2.9 Insulation of machinery space boundaries
2.10 Water-spray system
2.11 Separation of ro-ro spaces

Section 13 Protection of Vehicle, Special Category and Ro-ro Spaces

1 General requirements 709

1.1 Application
1.2 Basic principles for passenger ships

2 Precaution against ignition of flammable vapours in closed vehicle spaces, closed ro-ro spaces and special category spaces 709

2.1 Ventilation systems
2.2 Electrical equipment and wiring
2.3 Electrical equipment and wiring in exhaust ventilation ducts
2.4 Other ignition sources
2.5 Scuppers and discharges

3 Detection and alarm 711

3.1 Fixed fire detection and fire alarm systems
3.2 Sample extraction smoke detection systems
3.3 Special category spaces

4 Structural protection 711

4.1 General

5 Fire extinction 711

5.1 Fixed fire-extinguishing systems
5.2 Portable fire extinguishers

6 Vehicle carriers carrying motor vehicles with compressed hydrogen or natural gas in their tanks for their own propulsion 712

6.1 Spaces intended for carriage of motor vehicles with compressed natural gas in their tanks
6.2 Spaces intended for carriage of motor vehicles with compressed hydrogen in their tanks
6.3 Detection

Section 14 Safety Centre on Passenger Ships

1 General 713

1.1 Application
1.2 Location and arrangement

2 Layout and ergonomic design 713

2.1

3 Communications 713

3.1

4 Control and monitoring of safety systems 713

4.1

Section 15 Fire Safety Systems

1 General 714

1.1 Application
1.2 Use of toxic extinguishing media

Table of Content

2	International shore connections	714
	2.1 Engineering specifications	
3	Fire extinguishers	715
	3.1 Type approval 3.2 Engineering specifications	
4	Fixed gas fire-extinguishing systems	715
	4.1 Engineering specifications 4.2 Equivalent fixed gas fire-extinguishing systems 4.3 Requirements of steam systems	
5	Fixed foam fire-extinguishing systems	720
	5.1 General 5.2 Fixed high-expansion foam fire-extinguishing systems 5.3 Fixed low-expansion foam fire-extinguishing systems	
6	Fixed pressure water spraying and water-mist fire-extinguishing systems	724
	6.1 Engineering specifications	
7	Automatic sprinkler, fire detection and fire alarm systems	725
	7.1 Engineering specifications	
8	Fixed fire detection and fire alarm systems	727
	8.1 Definitions 8.2 Engineering specifications	
9	Sample extraction smoke detection systems	731
	9.1 Engineering specifications	
10	Low-location lighting systems	732
	10.1 Application 10.2 Engineering specification	
11	Fixed emergency fire pumps	732
	11.1 Engineering specifications	
12	Arrangement of means of escape	734
	12.1 Passenger ships 12.2 Cargo ships	
13	Inert gas systems	738
	13.1 Definitions 13.2 Requirements for all systems 13.3 Requirements for flue gas and inert gas generator systems 13.4 Requirements for nitrogen generator systems	
14	Helicopter facility foam firefighting appliances	743
	14.1 Application 14.2 Definitions 14.3 Engineering specifications for helidecks and helicopter landing areas	

Part C
Machinery, Electricity, Automation and Fire Protection

CHAPTER 1
MACHINERY

Section 1	General Requirements
Section 2	Diesel Engines
Section 3	Pressure Equipment
Section 4	Steam Turbines
Section 5	Gas Turbines
Section 6	Gearing
Section 7	Main Propulsion Shafting
Section 8	Propellers
Section 9	Shaft Vibrations
Section 10	Piping Systems
Section 11	Exhaust Gas Pollution Prevention System
Section 12	Onboard Carbon Capture and Storage Systems
Section 13	Ballast Water Management Systems
Section 14	Steering Gear
Section 15	Thrusters
Section 16	Refrigerating Installations
Section 17	Turbochargers
Section 18	Tests on Board
Appendix 1	Calculation for Internal Combustion Engine Crankshafts
Appendix 2	Reciprocating Internal Combustion Engines Fuelled by Natural Gas

Appendix 3 Plastic Pipes

Appendix 4 Type Testing Procedure for Crankcase Explosion Relief Valves

Appendix 5 Type Approval of Mechanical Joints

Appendix 6 Special Approval of Alloy Steel used for Intermediate Shaft Material

Appendix 7 Exhaust Gas Back Pressure Analysis

Appendix 8 Type Testing Procedure of Explosion Relief Devices for Combustion Air Inlet and Exhaust Gas Manifolds of I.C. Engines Using Gas as Fuel

Section 1 General Requirements

1 General

1.1 Application

1.1.1 Part C, Chapter 1 applies to the design, construction, installation, tests and trials of main propulsion and essential auxiliary machinery systems and associated equipment, boilers and pressure vessels, piping systems, and steering and manoeuvring systems installed on board classed ships, as indicated in each Section of this Chapter and as far as class is concerned only.

For computerized machinery systems, requirements contained in Part C, Chapter 3 shall be referred to.

1.2 Additional requirements

1.2.1 Additional requirements for machinery are given in:

- Part D and Part E for the assignment of the service notations
- Part F, for the assignment of additional class notations.

1.3 Documentation to be submitted

1.3.1 The Manufacturer, Designer or Shipbuilder is to submit to the Society the documents (plans, diagrams, specifications and calculations) requested in the relevant Sections of this Chapter.

1.3.2 The documents and information required in [2.6.2] [2.7.1], [2.8.1] [2.8.2] are to be submitted for information.

1.4 Definitions

1.4.1 Continuity of service

The Shipyard is to give special consideration to the reliability of single essential propulsion components. This *may require a separate source of propulsion power sufficient to give the ship a navigable speed, especially in the case of unconventional arrangements*.

1.4.2 Dead ship condition

Dead ship condition is the condition under which the whole propulsion system, including the main power supply, is not in operation and auxiliary means for bringing the main propulsion machinery into operation and for the restoration of the main power supply, such as compressed air and starting current from batteries, are not available, but assuming that means are available to start the emergency generator at all times.

2 Design and construction

2.1 General

2.1.1 *The machinery, boilers and other pressure vessels, associated piping systems and fittings are to be of a design and construction adequate for the service for which they are intended and shall be so installed and protected as to reduce to a minimum any danger to persons on board, due regard being paid to moving parts, hot surfaces and other hazards.*

The design is to have regard to materials used in construction, the purpose for which the equipment is intended, the working conditions to which it will be subjected and the environmental conditions on board.

2.2 Materials, welding and testing

2.2.1 General

Materials, welding and testing procedures are to be in accordance with the requirements of NR216 Materials and Welding, and those given in the other Sections of this Chapter. In addition, for machinery components fabricated by welding the requirements given in [2.2.2] apply.

2.2.2 Welded machinery components

Welding processes and welders are to be approved by the Society in accordance with NR216 Materials and Welding, Chapter 12 and NR476 Approval testing of welders.

References to welding procedures adopted are to be clearly indicated on the plans submitted for approval.

Joints transmitting loads are to be either:

- full penetration butt-joints welded on both sides, except when an equivalent procedure is approved
- full penetration T- or cruciform joints.

For joints between plates having a difference in thickness greater than 3 mm, a taper having a length of not less than 4 times the difference in thickness is required. Depending on the type of stress to which the joint is subjected, a taper equal to three times the difference in thickness may be accepted.

T-joints on scalloped edges are not permitted.

Lap-joints and T-joints subjected to tensile stresses are to have a throat size of fillet welds equal to 0,7 times the thickness of the thinner plate on both sides.

In the case of welded structures including cast pieces, the latter are to be cast with appropriate extensions to permit connection, through butt-welded joints, to the surrounding structures, and to allow any radiographic and ultrasonic examinations to be easily carried out.

Where required, preheating and stress relieving treatments are to be performed according to the welding procedure specification.

2.2.3 Non-destructive testing suppliers

Where required in these Rules, independent NDT service suppliers have to comply with the requirements set out in NR669 “Requirements for non-destructive testing suppliers”.

2.3 Vibrations

2.3.1 Shipyards and manufacturers are to give *special consideration to the design, construction and installation of propulsion machinery systems* and auxiliary machinery *so that any mode of their vibrations shall not cause undue stresses in this machinery in the normal operating ranges.*

2.4 Ambient conditions - Inclinations

2.4.1 *Main propulsion machinery and all auxiliary machinery essential to the propulsion and the safety of the ship,* as well as other equipment and appliances listed in Tab 1*, as fitted in the ship, are to be designed to operate when the ship is upright and when inclined at any angle of list either way and trim by bow or stern as stated in Tab 1.*

The Society may permit deviations from angles given in Tab 1, taking into consideration the type, size and service conditions of the ship.

2.5 Ambient conditions - Temperatures

2.5.1 Machinery and systems covered by the Rules are to be designed to operate properly under the ambient conditions specified in Tab 2, unless otherwise specified in each Section of this Chapter.

2.6 Ambient conditions - Ship accelerations and motions

2.6.1 Machinery operation under the effect of accelerations and motions

Main propulsion and steering machinery and auxiliary machinery that is essential to the propulsion and steering, and the safety of the ship, is to be capable of operation under the effects of acceleration and motions.

The requirements in [2.6.2], [2.7] and [2.8] apply where documented evidence of equipment suitability is specifically required by the Rules for such equipment. They apply in particular to LNG fuel pumps and gas compressors fitted to liquefied gas carriers (refer to Pt D, Ch 9, Sec 5, [13.2]) and to gas-fuelled ships (refer to NR529, [9.9.2]).

2.6.2 Ship accelerations and motions

Ship builders are to identify and document the ship accelerations and motions periods to which machinery and equipment might be subjected to. The expected accelerations and ship motions periods are to be within machinery and equipment manufacturers requirements. The estimations are to consider vessel type, machinery or equipment location and expected service conditions.

Table 1 : Inclinations of ship

Installations, components	Angle of inclination (degrees) **(1)** **(4)**			
	Athwartship		Fore and aft	
	static	dynamic	static	dynamic
Main and auxiliary machinery	15	22,5	5	7,5
Safety equipment, e.g. emergency power installations, emergency fire pumps and their devices Switch gear, electrical and electronic appliances **(3)** and remote control systems	22,5 **(2)**	22,5 **(2)**	10	10

(1) Athwartship and fore-and-aft inclinations may occur simultaneously.
(2) In ships for the carriage of liquefied gases and of chemicals, the emergency power supply must also remain operable with the ship flooded to a final athwartship inclination up to a maximum of 30°.
(3) No undesired switching operations or operational changes are to occur
(4) Where the length of the ship exceeds 100m, the fore-and-aft static angle of inclination may be taken as 500/L degrees, where L is the length of the ship, in metres, as defined in Pt B, Ch 1, Sec 3, [2.1.1]

Table 2 : Ambient conditions - Temperatures

AIR TEMPERATURE	
Location, arrangement	Temperature range, in °C
In enclosed spaces	between 0 and +45 **(2)**
On machinery components, boilers In spaces subject to higher or lower temperatures	According to specific local conditions
On exposed decks	between –25 and +45 **(1)**

WATER TEMPERATURE	
Coolant	Temperature, in °C
Sea water , including sea water at charge air coolant inlet, where applicable	up to +32

(1) Electronic appliances are to be designed for an air temperature up to 55°C (for electronic appliances see also Part C, Chapter 2).
(2) Different temperatures may be accepted by the Society in the case of ships intended for restricted service.

2.7 Evaluation of equipment suitability

2.7.1 Machinery and equipment manufacturers are to submit evidence to the Society that their machinery or equipment can operate under the required static and dynamic conditions stated in [2.4.1] and at least at the levels of shipboard accelerations as stated in [2.6.2] and/or specified in the relevant sections of the Rules. Documentation of satisfactory performance is to take the form of:

- report of testing under representative conditions; or
- report of theoretical verification using recognised computational techniques accompanied by detailed and relevant validation data; or
- historical data which provides relevant demonstration of satisfactory experience in service.

2.8 Installation and operation

2.8.1 Machinery and equipment manufacturers are to submit details of the requirements /recommendations for installation of the machinery and equipment onboard to ensure satisfactory operation in service under the required static and dynamic conditions as described in [2.4.1] and at least at the levels of shipboard accelerations as stated in [2.6.2] and/or specified in the relevant sections of the Rules.

2.8.2 Shipbuilders are to submit details demonstrating that the installation of the machinery and equipment onboard is in accordance with manufacturer's requirements /recommendations.

2.8.3 Consideration should be given for positioning machinery in order to minimize the dynamic load on bearings due to ship motion. Machinery with a horizontal rotation axis is generally to be fitted on board with such axis arranged alongships. If this is not possible, the Manufacturer is to be informed at the time the machinery is ordered.

2.9 Power of machinery

2.9.1 Unless otherwise stated in each Section of this Chapter, where scantlings of components are based on power, the values to be used are determined as follows:

- for main propulsion machinery, the power/rotational speed for which classification is requested
- for auxiliary machinery, the power/rotational speed which is available in service.

2.10 Astern power

2.10.1 *Sufficient power for going astern is to be provided to secure proper control of the ship in all normal circumstances.*

In order to maintain sufficient manoeuvrability and secure control of the ship in all normal circumstances, the main propulsion machinery is to be capable of reversing the direction of thrust so as to bring the ship to rest from the maximum service speed. The main propulsion machinery is to be capable of maintaining in free route astern at least 70% of the ahead revolutions.

Where steam turbines are used for main propulsion, they are to be capable of maintaining in free route astern at least 70% of the ahead revolutions for a period of at least 15 minutes.

For main propulsion systems with reversing gears, controllable pitch propellers or electrical propeller drive, running astern is not to lead to an overload of propulsion machinery.

During the sea trials, the ability of the main propulsion machinery to reverse the direction of thrust of the propeller is to be demonstrated and recorded (see also Ch 1, Sec 18).

2.11 Safety devices

2.11.1 *Where risk from overspeeding of machinery exists, means are to be provided to ensure that the safe speed is not exceeded.*

2.11.2 *Where main or auxiliary machinery including pressure vessels or any parts of such machinery are subject to internal pressure and may be subject to dangerous overpressure, means shall be provided, where practicable, to protect against such excessive pressure.*

2.11.3 *Main turbine propulsion machinery and, where applicable, main internal combustion propulsion machinery and auxiliary machinery shall be provided with automatic shut-off arrangements in the case of failures, such as lubricating oil supply failure, which could lead rapidly to complete breakdown, serious damage or explosion.*

The Society may permit provisions for overriding automatic shut-off devices.

See also the specific requirements given in the other Sections of this Chapter.

2.12 Fuels

2.12.1 Fuel oils employed for engines and boilers are, in general, to have a flashpoint (determined using the closed cup test) of not less than 60°C, except as otherwise permitted in items a) and b).

a) Fuel oils having a flashpoint of less than 60°C but not less than 43°C may be accepted:
- *in emergency generators;*
- *for feeding the emergency fire pump's engines and the auxiliary machines which are not located in the machinery spaces of category A; or*
- for ships assigned with a restricted navigation notation which are not intended to comply with IMO SOLAS Convention, and provided that:
  - Special precautions are taken to the Society's satisfaction including a demonstration that the temperature of spaces where fuel oil is stored or employed will remain at least 10°C below the fuel oil flashpoint at all times; and
  - This arrangement is also acceptable to the Flag Authority.

b) For installations specially approved for use of natural gas or other low-flashpoint fuel as fuel for boilers or propulsion engines, in the scope of the additional service features **LNGfuel**, **CNGfuel**, **LPGfuel** or, as relevant, other additional service features defined in Pt A, Ch 1, Sec 2, [4.16.4] and subject to the corresponding requirements.

2.12.2 *Machineries and piping systems for the usage of fuel oil having a flashpoint less than 60°C are also to comply with the following:*

a) *For oil fuel having a flashpoint of less than 60°C but not less than 43°C, oil tanks except those arranged in double bottom compartments shall be located outside of machinery spaces of category A*

b) For oil fuel having a flashpoint of less than 43°C, where permitted, oil tanks are to be located outside machinery spaces and the arrangements adopted have to be specially approved by the Society

c) *Provisions for the measurement of oil temperature should be provided on the suction pipe of oil fuel pump*

d) *Stop valves and/or cocks are to be provided to the inlet side and outlet side of the oil fuel strainers*

e) *Pipe joints of welded construction or of circular cone type or spherical type union joint are to be applied as much as possible.*

3 Arrangement and installation on board

3.1 General

3.1.1 *Provision shall be made to facilitate cleaning, inspection and maintenance of main propulsion and auxiliary machinery, including boilers and pressure vessels.*

Easy access to the various parts of the propulsion machinery is to be provided by means of metallic ladders and gratings fitted with strong and safe handrails.

Spaces containing main and auxiliary machinery are to be provided with adequate lighting and ventilation.

3.2 Floor plating and gratings

3.2.1 The floor plating and gratings in machinery spaces are to be metallic, divided into easily removable panels.

3.2.2 *The floor plating of normal passageways in machinery spaces of category A shall be made of steel.*

3.3 Bolting down

3.3.1 Bedplates of machinery are to be securely fixed to the supporting structures by means of foundation bolts which are to be distributed as evenly as practicable and of a sufficient number and size so as to ensure proper fitting.

Where the bedplates bear directly on the inner bottom plating, the bolts are to be fitted with suitable gaskets so as to ensure a tight fit and are to be arranged with their heads within the double bottom.

Continuous contact between bedplates and foundations along the bolting line is to be achieved by means of chocks of suitable thickness, carefully arranged to ensure a complete contact.

The same requirements apply to thrust block and shaft line bearing foundations.

Particular care is to be taken to obtain levelling and general alignment between the propulsion engines and their shafting (see Ch 1, Sec 7).

3.3.2 Chocking resins are to be type approved.

3.3.3 Where stays are provided for fixing the upper part of engines to the ship's structure in order, for example, to reduce the amplitude of engine vibrations, such stays are to be so designed as to prevent damage to these engines further to deformation of the shell plating in way of the said stays. The stays are to be connected to the hull in such a way as to avoid abnormal local loads on the structure of the ship.

3.4 Safety devices on moving parts

3.4.1 Suitable protective devices on access restrictions are to be provided in way of moving parts (flywheels, couplings, etc.) in order to avoid accidental contact of personnel with moving parts.

3.5 Gauges

3.5.1 All gauges are to be grouped, as far as possible, near each manoeuvring position; in any event, they are to be clearly visible.

3.6 Ventilation in machinery spaces

3.6.1 *Machinery spaces of Category A shall be adequately ventilated so as to ensure that when machinery or boilers therein are operating at full power in all weather conditions including heavy weather, an adequate supply of air is maintained to the spaces for the safety and comfort of personnel and the operation of the machinery. Any other machinery space shall be adequately ventilated appropriate for the purpose of that machinery space.*

The ventilation of machinery spaces is to be supplied through suitably protected openings arranged in such a way that they can be used in all weather conditions, taking into account Reg. 17(3) and Reg. 19 of the 1966 Load Line Convention as amended by the Protocol of 1988.

Special attention is to be paid both to air delivery and extraction and to air distribution in the various spaces. The quantity and distribution of air are to be such as to satisfy machinery requirements for developing maximum continuous power.

The ventilation is to be so arranged as to prevent any accumulation of flammable gases or vapours.

3.7 Hot surfaces and fire protection

3.7.1 Surfaces, having temperature exceeding 60°C, with which the crew are likely to come into contact during operation are to be suitably protected or insulated.

Surfaces of machinery with temperatures above 220°C, e.g. steam, thermal oil and exhaust gas lines, silencers, exhaust gas boilers and turbochargers, are to be effectively insulated with non-combustible material or equivalently protected to prevent the ignition of combustible materials coming into contact with them. Where the insulation used for this purpose is oil absorbent or may permit the penetration of oil, the insulation is to be encased in steel sheathing or equivalent material.

Fire protection, detection and extinction is to comply with the requirements of Part C, Chapter 4.

3.7.2 Specific requirements on fire protection related to engine, turbine and gearbox installations

Materials other than steel may be assessed in relation to the risk of fire associated with the component and its installation when engines, turbines and gearboxes are considered.

The use of materials other than steel is considered acceptable for the following applications:

- internal pipes which cannot cause any release of flammable fluid onto the machinery or into the machinery space in case of failure (this does not cover double sheeted pipes), or
- components that are only subject to liquid spray on the inside when the machinery is running, such as machinery covers, rocker box covers, camshaft end covers, inspection plates and sump tanks. It is a condition that the pressure inside these components and all the elements contained therein is less than 0,18 N/mm² and that wet sumps have a volume not exceeding 100 litres, or
- components attached to machinery which satisfy fire test criteria according to standard ISO 19921:2005 / 19922:2005 or other standards acceptable to the Society and which retain mechanical properties adequate for the intended installation.

3.7.3 Incinerators (except those exclusively intended to burn oil residue), as well as thermal fluid heaters, are to be located in rooms other than the following spaces:

- rooms containing parts of the propulsion plant and auxiliary equipment
- steering gear room
- rooms containing electric generating sets (including the emergency generating set) or containing the main or the emergency switchboard
- rooms containing hydraulic equipment
- engine control room
- engineers' and electricians' workshops.

Alternatively the incinerator may be located in the Engine Room or other machinery spaces of category A, provided:

- It is located away from possible sources of flammable oil leakage or other combustible products
- Hot surfaces of the incinerator are insulated according to the provisions of [3.7.1].

A local fixed fire-extinguishing system as required by Ch 4, Sec 6, [4.7] is to be provided, capable of being activated manually from the machinery control position or from another suitable location.

3.7.4 As far as practicable, the hydraulic power units are not to be located in machinery spaces containing the boilers, main engine, its auxiliaries or other sources of ignition. Unless otherwise specified, the hydraulic systems are to comply with the provision of Ch 1, Sec 10, [14].

3.8 Machinery remote control, alarms and safety systems

3.8.1 For remote control systems of main propulsion machinery and essential auxiliary machinery and relevant alarms and safety systems, the requirements of Part C, Chapter 3 apply.

4 Tests and trials

4.1 Works tests

4.1.1 Equipment and its components are subjected to works tests which are detailed in the relevant Sections of this Chapter. The Surveyor is to be informed in advance of these tests.

Where such tests cannot be performed in the workshop, the Society may allow them to be carried out on board, provided this is not judged to be in contrast either with the general characteristics of the machinery being tested or with particular features of the shipboard installation. In such cases, the Surveyor is to be informed in advance and the tests are to be carried out in accordance with the provisions of NR216 Materials and Welding, relative to incomplete tests.

All boilers, all parts of machinery, all steam, hydraulic, pneumatic and other systems and their associated fittings which are under internal pressure shall be subjected to appropriate tests including a pressure test before being put into service for the first time as detailed in the other Sections of this Chapter.

4.2 Trials on board

4.2.1 Trials on board of machinery are detailed in Ch 1, Sec 18.

Section 2 Diesel Engines

1 General

1.1 Application

1.1.1 Diesel engines listed below are to be designed, constructed, installed, tested and certified in accordance with the requirements of this Section, under the supervision and to the satisfaction of the Society's Surveyors:

a) main propulsion engines

b) engines driving electric generators, including emergency generators

c) engines driving other auxiliaries essential for safety and navigation and cargo pumps in tankers, when they develop a power of 110 kW and over.

All other engines are to be designed and constructed according to sound marine practice, with the equipment required in [2.3.4], and delivered with the relevant works' certificate (see NR216 Materials and Welding, Ch 1, Sec 1, [4.2.3]).

Engines intended for propulsion of lifeboats and compression ignition engines intended for propulsion of rescue boats are to comply with the relevant Rule requirements.

Additional requirements for control and safety systems for dual fuel engines are given in Ch 1, App 2.

In addition to the requirements of this Section, those given in Ch 1, Sec 1 apply.

1.2 Documentation flow for diesel engine

1.2.1 Document flow for obtaining a type approval certificate

- For the initial engine type, the engine designer prepares the documentation in accordance with requirements in Tab 1 and Tab 2 and forwards to the Society according to the agreed procedure for review.

  In addition, the documents and drawing listed in Ch 1, App 2, Tab 1 are to be submitted for approval of DF engines
- Upon review and approval of the submitted documentation (evidence of approval), it is returned to the engine designer.
- The engine designer arranges for a Surveyor to attend an engine type test and upon satisfactory testing the Society issues a type approval certificate.

1.2.2 Document flow for engine certificate

a) The engine type must have a type approval certificate. For the first engine of a type, the type approval process and the engine certification process (ECP) may be performed simultaneously.

b) Engines to be installed in specific applications may require the engine designer/licensor to modify the design or performance requirements. The modified drawings are forwarded by the engine designer to the engine builder/licensee to develop production documentation for use in the engine manufacture in accordance with Tab 3.

c) The engine builder/licensee develops a comparison list of the production documentation to the documentation listed in Tab 1 and Tab 2.

   If there are differences in the technical content on the licensee's production drawings/documents compared to the corresponding licensor's drawings, the licensee must obtain agreement to such differences from the licensor.

   If the designer acceptance is not confirmed, the engine is to be regarded as a different engine type and is to be subjected to the complete type approval process by the licensee.

d) The engine builder/licensee submits the comparison list and the production documentation to the Society according to the agreed procedure for review/approval.

e) The Society returns documentation to the engine builder/licensee with confirmation that the design has been approved. This documentation is intended to be used by the engine builder/licensee and their subcontractors and attending Surveyors. As the attending Surveyors may request the engine builder/licensee or their subcontractors to provide the actual documents indicated in the list, the documents are necessary to be prepared and available for the Surveyors.

f) The attending Surveyors, at the engine builder/licensee/subcontractors, will issue product certificates as necessary for components manufactured upon satisfactory inspections and tests.

g) The engine builder/licensee assembles the engine, tests the engine with a Surveyor present. An engine certificate is issued by the Surveyor upon satisfactory completion of assembly and tests.

1.2.3 Approval of diesel engine components

Components of engine designer's design which are covered by the type approval certificate of the relevant engine type are regarded as approved whether manufactured by the engine manufacturer or sub-supplied. For components of subcontractor's design, necessary approvals are to be obtained by the relevant suppliers (e.g. exhaust gas turbochargers, charge air coolers, etc.).

Table 1 : Document to be submitted for information, as applicable

No.	Item
1	Engine particulars (e.g. Data sheet with general engine information, Project Guide, Marine Installation Manual)
2	Engine cross section
3	Engine longitudinal section
4	Bedplate and crankcase of cast design
5	Thrust bearing assembly **(1)**
6	Frame/frame box/gearbox of cast design **(2)**
7	Tie rod
8	Connecting rod
9	Connecting rod, assembly **(3)**
10	Crosshead, assembly **(3)**
11	Piston rod, assembly **(3)**
12	Piston, assembly **(3)**
13	Cylinder jacket/ block of cast design **(2)**
14	Cylinder cover, assembly **(3)**
15	Cylinder liner
16	Counterweights (if not integral with crankshaft), including fastening
17	Camshaft drive, assembly **(3)**
18	Flywheel
19	Fuel oil injection pump
20	Shielding and insulation of exhaust pipes and other parts of high temperature which may be impinged as a result of a fuel system failure, assembly
	For electronically controlled engines, construction and arrangement of:
21	• Control valves
22	• High-pressure pumps
23	• Drive for high pressure pumps
24	Operation and service manuals **(4)**
25	FMEA (for engine control system) **(5)**
26	Production specifications for castings and welding (sequence)
27	Evidence of quality control system for engine design and in service maintenance
28	Quality requirements for engine production
29	Type approval certification for environmental tests, control components **(6)**

(1) If integral with engine and not integrated in the bedplate.
(2) Only for one cylinder or one cylinder configuration.
(3) Including identification (e.g. drawing number) of components.
(4) Operation and service manuals are to contain maintenance requirements (servicing and repair) including details of any special tools and gauges that are to be used with their fitting/settings together with any test requirements on completion of maintenance.
(5) Where engines rely on hydraulic, pneumatic or electronic control of fuel injection and/or valves, a failure mode and effects analysis (FMEA) is to be submitted to demonstrate that failure of the control system will not result in the operation of the engine being degraded beyond acceptable performance criteria for the engine.
(6) Tests are to demonstrate the ability of the control, protection and safety equipment to function as intended under the specified testing conditions (see Ch 3, Sec 6, [2]).

Table 2 : Documentation to be submitted for approval, as applicable

No	Item
1	Bedplate and crankcase of welded design, with welding details and welding instructions **(1) (2)**
2	Thrust bearing bedplate of welded design, with welding details and welding instructions **(1)**
3	Bedplate/oil sump welding drawings **(1)**
4	Frame/framebox/gearbox of welded design, with welding details and instructions **(1) (2)**
5	Engine frames, welding drawings **(1) (2)**
6	Crankshaft, details, each cylinder No.
7	Crankshaft, assembly, each cylinder No.
8	Crankshaft calculations (for each cylinder configuration) according to the attached data sheet and Ch 1, App 1
9	Thrust shaft or intermediate shaft (if integral with engine)
10	Shaft coupling bolts
11	Material specifications of main parts with information on non-destructive material tests and pressure tests **(3)**
	Schematic layout or other equivalent documents on the engine of:
12	• Starting air system
13	• Fuel oil system
14	• Lubricating oil system
15	• Cooling water system
16	• Hydraulic system
17	• Hydraulic system (for valve lift)
18	• Engine control and safety system
19	Shielding of high pressure fuel pipes, assembly **(4)**
20	Construction of accumulators (for electronically controlled engine)
21	Construction of common accumulators (for electronically controlled engine)
22	Arrangement and details of the crankcase explosion relief valve (see [2.3]) **(5)**
23	Calculation results for crankcase explosion relief valves ([2.3])
24	Details of the type test program and the type test report) **(6)**
25	High pressure parts for fuel oil injection system **(7)**
26	Oil mist detection and/or alternative alarm arrangements (see [2.3])
27	Details of mechanical joints of piping systems (Ch 1, Sec 10, [2.4])
28	Documentation verifying compliance with inclination limits (see Ch 1, Sec 1, [2.4])
29	Documents as required in Ch 3, Sec 3, as applicable

(1) For approval of materials and weld procedure specifications. The weld procedure specification is to include details of pre and post weld heat treatment, weld consumables and fit-up conditions.
(2) For each cylinder for which dimensions and details differ.
(3) For comparison with Society requirements for material, NDT and pressure testing as applicable.
(4) All engines.
(5) Only for engines of a cylinder diameter of 200 mm or more or a crankcase volume of 0.6 m3 or more.
(6) The type test report may be submitted shortly after the conclusion of the type test.
(7) The documentation to contain specifications for pressures, pipe dimensions and materials.

Table 3 : Documentation for the inspection of components and systems

No	Item
1	Engine particulars
2	Material specifications of main parts with information on non-destructive material tests and pressure tests **(1)**
3	Bedplate and crankcase of welded design, with welding details and welding instructions **(2)**
4	Thrust bearing bedplate of welded design, with welding details and welding instructions **(2)**
5	Frame/framebox/gearbox of welded design, with welding details and instructions **(2)**
6	Crankshaft, assembly and details
7	Thrust shaft or intermediate shaft (if integral with engine)
8	Shaft coupling bolts
9	Bolts and studs for main bearings
10	Bolts and studs for cylinder heads and exhaust valve (two stroke design)
11	Bolts and studs for connecting rods

No	Item
12	Tie rods
	Schematic layout or other equivalent documents on the engine of: **(3)**
13	• Starting air system
14	• Fuel oil system
15	• Lubricating oil system
16	• Cooling water system
17	• Hydraulic system
18	• Hydraulic system (for valve lift)
19	• Engine control and safety system
20	Shielding of high pressure fuel pipes, assembly **(4)**
21	Construction of accumulators for hydraulic oil and fuel oil
22	High pressure parts for fuel oil injection system **(5)**
23	Arrangement and details of the crankcase explosion relief valve (see [2.3]) **(6)**
24	Oil mist detection and/or alternative alarm arrangements (see [2.3])
25	Cylinder head
26	Cylinder block, engine block
27	Cylinder liner
28	Counterweights (if not integral with crankshaft), including fastening
29	Connecting rod with cap
30	Crosshead
31	Piston rod
32	Piston, assembly **(7)**
33	Piston head
34	Camshaft drive, assembly **(7)**
35	Flywheel
36	Arrangement of foundation (for main engines only)
37	Fuel oil injection pump
38	Shielding and insulation of exhaust pipes and other parts of high temperature which may be impinged as a result of a fuel system failure, assembly
39	Construction and arrangement of dampers
	For electronically controlled engines, assembly drawings or arrangements of:
40	• Control valves
41	• High-pressure pumps
42	• Drive for high pressure pumps
43	• Valve bodies, if applicable
44	Operation and service manuals **(8)**
45	Test program resulting from FMEA (for engine control system) **(9)**
46	Production specifications for castings and welding (sequence)
47	Type approval certification for environmental tests, control components **(10)**
48	Quality requirements for engine production

(1) For comparison with Society requirements for material, NDT and pressure testing as applicable.
(2) For approval of materials and weld procedure specifications. The weld procedure specification is to include details of pre and post weld heat treatment, weld consumables and fit-up conditions.
(3) Details of the system so far as supplied by the engine manufacturer such as: main dimensions, operating media and maximum working pressures.
(4) All engines.
(5) The documentation to contain specifications for pressures, pipe dimensions and materials.
(6) Only for engines of a cylinder diameter of 200 mm or more or a crankcase volume of 0.6 m3 or more.
(7) Including identification (e.g. drawing number) of components.
(8) Operation and service manuals are to contain maintenance requirements (servicing and repair) including details of any special tools and gauges that are to be used with their fitting/settings together with any test requirements on completion of maintenance.
(9) Required for engines that rely on hydraulic, pneumatic or electronic control of fuel injection and/or valves.
(10) Documents modified for a specific application are to be submitted to the Society for information or approval, as applicable. See [1.2.2], item b).

1.3 Definitions

1.3.1 Engine type

In general, the type of an engine is defined by the following characteristics:

- the cylinder diameter
- the piston stroke
- the method of injection (direct or indirect injection)
- the kind of fuel (liquid, gaseous or dual-fuel)
- the working cycle (4-stroke, 2-stroke)
- the gas exchange (naturally aspirated or supercharged)
- the maximum continuous power per cylinder at the corresponding speed and/or brake mean effective pressure corresponding to the above-mentioned maximum continuous power
- the method of pressure charging (pulsating system or constant pressure system)
- the charging air cooling system (with or without intercooler, number of stages, etc.)
- cylinder arrangement (in-line or V-type).

1.3.2 Engine power

The maximum continuous power is the maximum power at ambient reference conditions (see [1.3.3]) which the engine is capable of delivering continuously, at nominal maximum speed, in the period of time between two consecutive overhauls.

Power, speed and the period of time between two consecutive overhauls are to be stated by the Manufacturer and agreed by the Society.

The rated power is the maximum power at ambient reference conditions (see [1.3.3]) which the engine is capable of delivering as set after works trials (fuel stop power) at the maximum speed allowed by the governor.

The rated power for engines driving electric generators is the nominal power, taken at the net of overload, at ambient reference conditions (see [1.3.3]), which the engine is capable of delivering as set after the works trials (see [4.3]).

1.3.3 Ambient reference conditions

The power of engines as per [1.1.1], items a), b) and c) is to be referred to the following conditions:

- barometric pressure = 0,1 MPa
- relative humidity = 60%
- ambient air temperature = 45°C
- sea water temperature (and temperature at inlet of sea water cooled charge air cooler) = 32°C.

In the case of ships assigned with a navigation notation other than unrestricted navigation, different temperatures may be accepted by the Society.

The engine Manufacturer is not expected to provide the above ambient conditions at a test bed. The rating is to be adjusted according to a recognised standard accepted by the Society.

1.3.4 Same type of engines

Two diesel engines are considered to be of the same type when they do not substantially differ in design and construction characteristics, such as those listed in the engine type definition as per [1.3.1], it being taken for granted that the documentation concerning the essential engine components listed in Tab 1, Tab 2 and Tab 3, and associated materials employed has been submitted, examined and, where necessary, approved by the Society.

1.3.5 Substantive modifications or major modifications or major changes

Design modifications, which lead to alterations in the stress levels, operational behaviour, fatigue life or an effect on other components or characteristics of importance such as emissions.

1.3.6 Low-Speed Engines means diesel engines having a rated speed of less than 300 rpm.

Medium-Speed Engines means diesel engines having a rated speed of 300 rpm and above, but less than 1400 rpm.

High-Speed Engines means diesel engines having a rated speed of 1400 rpm and above.

2 Design and construction

2.1 Materials and welding

2.1.1 Crankshaft materials

In general, crankshafts are to be of forged steel having a tensile strength not less than 400 N/mm^2 and not greater than 1000 N/mm^2.

The use of forged steels of higher tensile strength is subject to special consideration by the Society in each case.

The Society, at its discretion and subject to special conditions (such as restrictions in ship navigation), may accept crankshafts made of cast carbon steel, cast alloyed steel of appropriate quality and manufactured by a suitable procedure having a tensile strength as follows:

a) between 400 N/mm^2 and 560 /mm^2 for cast carbon steel

b) between 400 N/mm^2 and 700 N/mm^2 for cast alloyed steel.

The Society, at its discretion and subject to special conditions (such as restrictions in ship navigation), may also accept crankshafts made of cast iron for engines of a nominal power not exceeding 110 kW with a significative in-service behaviour either in marine or industry. The cast iron is to be of "SG" type (spheroidal graphite) of appropriate quality and manufactured by a suitable procedure.

2.1.2 Welded frames and foundations

Steels used in the fabrication of welded frames and bedplates are to comply with the requirements of NR216 Materials and Welding.

Welding is to be in accordance with the requirements of Ch 1, Sec 1, [2.2].

2.2 Crankshaft

2.2.1 Check of the scantling

The check of crankshaft strength is to be carried out in accordance with Ch 1, App 1.

2.3 Crankcase

2.3.1 Strength

Crankcase construction and crankcase doors are to be of sufficient strength to withstand anticipated crankcase pressures that may arise during a crankcase explosion taking into account the installation of explosion relief valves required by [2.3.4]. Crankcase doors are to be fastened sufficiently securely for them not be readily displaced by a crankcase explosion.

2.3.2 Ventilation and drainage

Ventilation of crankcase, and any arrangement which could produce a flow of external air within the crankcase, is in principle not permitted.

Vent pipes, where provided, are to be as small as practicable. If provision is made for the forced extraction of gases from the crankcase (e.g. for detection of explosive mixtures), the vacuum in the crankcase is not to exceed:

2,5 10^{-4} MPa

To avoid interconnection between crankcases and the possible spread of fire following an explosion, crankcase ventilation pipes and oil drain pipes for each engine are to be independent of any other engine.

2.3.3 Warning notice

A warning notice is to be fitted, preferably on a crankcase door on each side of the engine, or alternatively on the control stand.

This warning notice is to specify that whenever overheating is suspected in the crankcase, the crankcase doors or sight holes are not to be opened until a reasonable time has elapsed after stopping the engine, sufficient to permit adequate cooling of the crankcase.

2.3.4 Crankcase explosion relief valves

a) Diesel engines of a cylinder diameter of 200 mm and above or a crankcase gross volume of 0,6 m^3 and above are to be provided with crankcase explosion relief valves in accordance with the following requirements.

b) Engines having a cylinder bore not exceeding 250 mm, are to have at least one valve near each end, but over eight crankthrows, an additional valve is to be fitted near the middle of the engine. Engines having a cylinder bore exceeding 250 mm, but not exceeding 300 mm, are to have at least one valve in way of each alternate crankthrow, with a minimum of two valves. Engines having a cylinder bore exceeding 300 mm are to have at least one valve in way of each main crankthrow.

c) Additional relief valves are to be fitted on separate spaces of the crankcase, such as gear or chain cases for camshaft or similar drives, when the gross volume of such spaces is 0,6 m^3 or above.

d) The free area of each relief valve is not to be less than 45 cm^2.

e) The combined free area of the valves fitted on an engine is not to be less than 115 cm^2 per cubic metre of the crankcase gross volume. (See Note 1).

f) Crankcase explosion relief valves are to be provided with lightweight spring-loaded valve discs or other quick-acting and self closing devices to relieve a crankcase of pressure in the event of an internal explosion and to prevent any inrush of air thereafter.

g) The valve discs in crankcase explosion relief valves are to be made of ductile material capable of withstanding the shock of contact with stoppers at the full open position.

h) Crankcase explosion relief valves are to be designed and constructed to open quickly and to be fully open at a pressure not greater than 0,02 MPa.

i) Crankcase explosion relief valves are to be provided with a flame arrester that permits flow for crankcase pressure relief and prevents passage of flame following a crankcase explosion.

j) Crankcase explosion relief valves are to be type tested in a configuration that represents the installation arrangements that will be used on an engine.

The purpose of type testing crankcase explosion valves is:

- to verify the effectiveness of the flame arrester
- to verify that the valve closes after an explosion
- to verify that the valve is gas/air tight after an explosion
- to establish the level of overpressure protection provided by the valve.

Where crankcase relief valves are provided with arrangements for shielding emissions from the valve following an explosion, the valve is to be type tested to demonstrate that the shielding does not adversely affect the operational effectiveness of the valve.

Type testing procedure is to comply with Ch 1, App 4.

k) Crankcase explosion relief valves are to be provided with a copy of the manufacturer's installation and maintenance manual that is pertinent to the size and type of valve being supplied for installation on a particular engine.

The manual is to contain the following information:

- description of valve with details of function and design limits
- copy of type test certification
- installation instructions
- maintenance in service instructions to include testing and renewal of any sealing arrangements
- actions required after a crankcase explosion.

l) A copy of the installation and maintenance manual required in i) above is to be provided on board the unit.

m) Valves are to be provided with suitable markings that include the following information:

- name and address of manufacturer
- designation and size
- month/year of manufacture
- approved installation orientation.

Note 1: The total volume of the stationary parts within the crankcase may be discounted in estimating the crankcase gross volume (rotating and reciprocating components are to be included in the gross volume).

2.3.5 Oil mist detection

a) Oil mist detection arrangements (or engine bearing temperature monitors or equivalent devices) are required:

- for alarm and slow down purposes for low speed diesel engines of 2250 kW and above or having cylinders of more than 300 mm bore
- for alarm and automatic shutoff purposes for medium and high speed diesel engines of 2250 kW and above or having cylinders of more than 300 mm bore

Oil mist detection arrangements are to be of a type approved and tested in accordance with Ch 3, App 1 and comply with b) to c) below. Engine bearing temperature monitors or equivalent devices used as safety devices have to be of a type approved by the Society for such purposes

Note 1: An equivalent device for high speed engines could be interpreted as measures applied to high speed engines where specific design features to preclude the risk of crankcase explosions are incorporated.

b) The oil mist detection system and arrangements are to be installed in accordance with the engine designer's and oil mist manufacturer's instructions/recommendations. The following particulars are to be included in the instructions:
   - Schematic layout of engine oil mist detection and alarm system showing location of engine crankcase sample points and piping or cable arrangements together with pipe dimensions to detector
   - Evidence of study to justify the selected location of sample points and sample extraction rate (if applicable) in consideration of the crankcase arrangements and geometry and the predicted crankcase atmosphere where oil mist can accumulate
   - The manufacturer's maintenance and test manual
   - Information relating to type or in-service testing of the engine with engine protection system test arrangements having approved types of oil mist detection equipment

c) A copy of the oil mist detection equipment maintenance and test manual required by item b) is to be provided on board ship

d) Oil mist detection and alarm information is to be capable of being read from a safe location away from the engine

e) Each engine is to be provided with its own independent oil mist detection arrangement and a dedicated alarm

f) Oil mist detection and alarm systems are to be capable of being tested on the test bed and board under engine at standstill and engine running at normal operating conditions in accordance with test procedures that are acceptable to the Society

g) The oil mist detection arrangements are to provide an alarm indication in the event of a foreseeable functional failure in the equipment and installation arrangements

h) The oil mist detection system is to provide an indication that any lenses fitted in the equipment and used in determination of the oil mist level have been partially obscured to a degree that will affect the reliability of the information and alarm indication

i) Where oil mist detection equipment includes the use of programmable electronic systems, the arrangements are to be in accordance with individual Society requirements for such systems

j) Plans showing details and arrangements of oil mist detection and alarm arrangements are to be submitted for approval in accordance with Tab 2 under item 18

k) The equipment together with detectors is to be tested when installed on the test bed and on board ship to demonstrate that the detection and alarm system functionally operates. The testing arrangements are to be to the satisfaction of the Society

l) Where sequential oil mist detection arrangements are provided the sampling frequency and time is to be as short as reasonably practicable

m) Where alternative methods are provided for the prevention of the build-up of oil mist that may lead to a potentially explosive condition within the crankcase details are to be submitted for consideration of individual Societies. The following information is to be included in the details to be submitted for consideration:
   - Engine particulars – type, power, speed, stroke, bore and crankcase volume
   - Details of arrangements prevent the build up of potentially explosive conditions within the crankcase, e.g., bearing temperature monitoring, oil splash temperature, crankcase pressure monitoring, recirculation arrangements
   - Evidence to demonstrate that the arrangements are effective in preventing the build up of potentially explosive conditions together with details of in-service experience
   - Operating instructions and the maintenance and test instructions

n) Where it is proposed to use the introduction of inert gas into the crankcase to minimise a potential crankcase explosion, details of the arrangements are to be submitted to the Society for consideration.

2.3.6 When materials other than steel are used for crankcase, requirements in Ch 1, Sec 1, [3.7.2] are to be referred to.

2.4 Scavenge manifolds

2.4.1 Fire extinguishing

For two-stroke crosshead type engines, scavenge spaces in open connection (without valves) to the cylinders are to be connected to a fixed fire-extinguishing system, which is to be entirely independent of the fire-extinguishing system of the machinery space.

2.4.2 Blowers

Where a single two-stroke propulsion engine is equipped with an independently driven blower, alternative means to drive the blower or an auxiliary blower are to be provided ready for use.

2.4.3 Relief valves

Scavenge spaces in open connection to the cylinders are to be fitted with explosion relief valves in accordance with [2.3.4].

2.5 Systems

2.5.1 General

In addition to the requirements of the present sub-article, those given in Ch 1, Sec 10 and in Ch 1, Sec 1, [3.7.2] are to be satisfied.

Flexible hoses in the fuel and lubricating oil system are to be limited to the minimum and are to be type approved.

Unless otherwise stated in Ch 1, Sec 10, propulsion engines are to be equipped with external connections for standby pumps for:

- fuel oil supply
- lubricating oil and cooling water circulation.

2.5.2 Fuel oil system

Relief valves discharging back to the suction of the pumps or other equivalent means are to be fitted on the delivery side of the pumps.

In fuel oil systems for propulsion machinery, filters are to be fitted and arranged so that an uninterrupted supply of filtered fuel oil is ensured during cleaning operations of the filter equipment, except when otherwise stated in Ch 1, Sec 10.

a) *External high pressure fuel delivery lines between the high pressure fuel pumps and fuel injectors are to be protected with a jacketed piping system capable of containing fuel from a high pressure line failure.*

A jacketed pipe incorporates an outer pipe into which the high pressure fuel pipe is placed, forming a permanent assembly.

The jacketed piping system is to include a means for collection of leakages and arrangements are to be provided with an alarm in case of a fuel line failure.

If flexible hoses are used for shielding purposes, these are to be approved by the Society.

When in fuel oil return piping the pulsation of pressure with peak to peak values exceeds 2 MPa, shielding of this piping is also required as above.

b) For ships assigned with a restricted navigation notation, the requirements under item a) may be relaxed at the Society's discretion.

2.5.3 Lubricating oil system

Efficient filters are to be fitted in the lubricating oil system when the oil is circulated under pressure.

In such lubricating oil systems for propulsion machinery, filters are to be arranged so that an uninterrupted supply of filtered lubricating oil is ensured during cleaning operations of the filter equipment, except when otherwise stated in Ch 1, Sec 10.

Relief valves discharging back to the suction of the pumps or other equivalent means are to be fitted on the delivery side of the pumps.

The relief valves may be omitted provided that the filters can withstand the maximum pressure that the pump may develop.

Where necessary, the lubricating oil is to be cooled by means of suitable coolers.

2.5.4 Charge air system

a) Requirements relevant to design, construction, arrangement, installation, tests and certification of exhaust gas turbochargers are given in Ch 1, Sec 17.

b) When two-stroke propulsion engines are supercharged by exhaust gas turbochargers which operate on the impulse system, provision is to be made to prevent broken piston rings entering turbocharger casings and causing damage to blades and nozzle rings.

2.6 Starting air system

2.6.1 The requirements given in [3.1] apply.

2.7 Control and monitoring

2.7.1 General

In addition to those of this item, the general requirements given in Part C, Chapter 3 apply.

2.7.2 Alarm

The lubricating oil system of diesel engines with a power equal to or in excess of 37 kW is to be fitted with alarms to give audible and visual warning in the event of an appreciable reduction in pressure of the lubricating oil supply.

2.7.3 Governors of main and auxiliary engines

Each engine, except the auxiliary engines for driving electric generators for which [2.7.6] applies, is to be fitted with a speed governor so adjusted that the engine does not exceed the rated speed by more than 15%.

2.7.4 Overspeed protective devices of main and auxiliary engines

In addition to the speed governor, each:

- main propulsion engine having a rated power of 220 kW and above, which can be declutched or which drives a controllable pitch propeller, and
- auxiliary engine having a rated power of 220 kW and above, except those for driving electric generators, for which [2.7.6], item f) applies,

is to be fitted with a separate overspeed protective device so adjusted that the engine cannot exceed the rated speed n by more than 20%; arrangements are to be made to test the overspeed protective device.

Equivalent arrangements may be accepted subject to special consideration by the Society in each case.

The overspeed protective device, including its driving mechanism or speed sensor, is to be independent of the governor.

2.7.5 Use of electronic governors

a) Type approval

Electronic governors and their actuators are to be type approved by the Society.

b) Electronic governors for main propulsion engines

If an electronic governor is fitted to ensure continuous speed control or resumption of control after a fault, an additional separate governor is to be provided unless the engine has a manually operated fuel admission control system suitable for its control.

A fault in the governor system is not to lead to sudden major changes in propulsion power or direction of propeller rotation.

Alarms are to be fitted to indicate faults in the governor system.

The acceptance of electronic governors not in compliance with the above requirements will be considered by the Society on a case by case basis, when fitted on ships with two or more main propulsion engines.

c) Electronic governors forming part of a remote control system

When electronic speed governors of main internal combustion engines form part of a remote control system, they are to comply with the following conditions:

- If lack of power to the governor may cause major and sudden changes in the present speed and direction of thrust of the propeller, back up power supply is to be provided;
- Local control of the engines is always to be possible even in the case of failure in any part of the automatic or remote control systems. To this purpose, from the local control position it is to be possible to disconnect the remote signal, bearing in mind that the speed control according to [2.7.3] is not available unless an additional separate governor is provided for such local mode of control.

d) Electronic governors for auxiliary engines driving electric generators

In the event of a fault in the electronic governor system the fuel admission is to be set to “zero”.

Alarms are to be fitted to indicate faults in the governor system.

The acceptance of electronic governors fitted on engines driving emergency generators will be considered by the Society on a case by case basis.

2.7.6 Governors for auxiliary engines driving electric generators

a) Prime movers for driving generators of the main and emergency sources of electrical power are to be fitted with a speed governor which will prevent transient frequency variations in the electrical network in excess of ±10% of the rated frequency with a recovery time to steady state conditions not exceeding 5 seconds, when the maximum electrical step load is switched on or off.

In the case when a step load equivalent to the rated output of a generator is switched off, a transient speed variation in excess of 10% of the rated speed may be acceptable, provided this does not cause the intervention of the overspeed device as required by item f).

b) At all loads between no load and rated power, the permanent speed variation is not to be more than 5% of the rated speed.

c) Prime movers are to be selected in such a way that they meet the load demand within the ship’s mains and, when running at no load, can satisfy the requirement in item a) above if suddenly loaded to 50% of the rated power of the generator, followed by the remaining 50% after an interval sufficient to restore speed to steady state. Steady state conditions (see Note 1) are to be achieved in not more than 5 s.

Note 1: Steady state conditions are those at which the envelope of speed variation does not exceed ± 1% of the declared speed at the new power.

d) Application of the electrical load in more than 2 load steps can only be allowed if the conditions within the ship's mains permit the use of those auxiliary engines which can only be loaded in more than 2 load steps (see Fig 1 for guidance on 4-stroke diesel engines expected maximum possible sudden power increase) and provided that this is already allowed for in the designing stage.

This is to be verified in the form of system specifications to be approved and to be demonstrated at ship's trials. In this case, due consideration is to be given to the power required for the electrical equipment to be automatically switched on after blackout and to the sequence in which it is connected.

This also applies to generators to be operated in parallel and where the power is to be transferred from one generator to another, in the event that any one generator is to be switched off.

e) Emergency generator sets must satisfy the governor conditions as per items a) and b) when:

- their total consumer load is applied suddenly, or
- their total consumer load is applied in steps, subject to:
  - the total load is supplied within 45 seconds since power failure on the main switchboard
  - the maximum step load is declared and demonstrated
  - the power distribution system is designed such that the declared maximum step loading is not exceeded
  - the compliance of time delays and loading sequence with the above is to be demonstrated at ship's trials

f) In addition to the speed governor, auxiliary engines of rated power equal to or greater than 220 kW driving electric generators are to be fitted with a separate overspeed protective device, with a means for manual tripping, adjusted so as to prevent the rated speed from being exceeded by more than 15%.

This device is to automatically shut down the engine.

g) For alternating current generating sets operating in parallel, the governing characteristics of the prime movers are to be such that, within the limits of 20% and 100% total load, the load on any generating set will not normally differ from its proportionate share of the total load by more than 15% of the rated power in kW of the largest machine or 25% of the rated power in kW of the individual machine in question, whichever is the lesser.

For alternating current generating sets intended to operate in parallel, facilities are to be provided to adjust the governor sufficiently finely to permit an adjustment of load not exceeding 5% of the rated load at normal frequency.

2.7.7 Engine Power Limitation (EPL) and Shaft Power Limitation (ShaPoLi) systems

a) The Overridable Engine Power Limitation (EPL) systems and Overridable Shaft Power Limitation (SHaPoLi) systems are to be of a type approved by the Society. These systems, in particular those of a mechanical type, may also be considered on a case-by-case basis by the Society.

b) Where technically possible, EPL and SHaPoLi systems are to be controlled from the navigation bridge without the crew's attendance in the machinery space.

Figure 1 : Reference values for maximum possible sudden power increases P as a function of brake mean effective pressure, P_{me}, at declared power (four-stroke diesel engines)

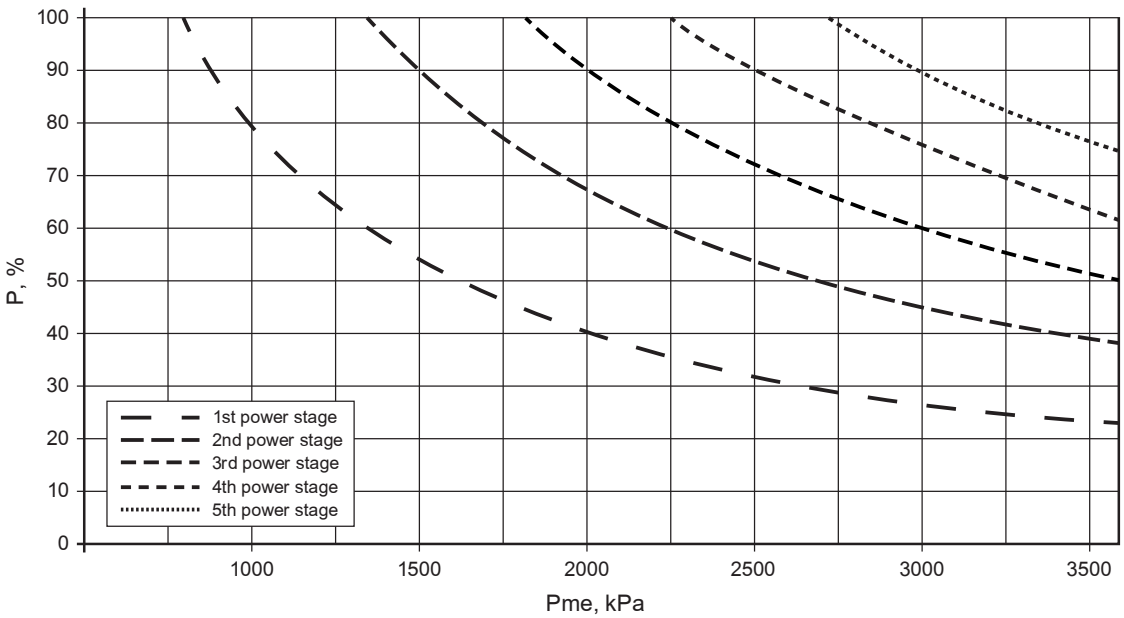

P: power increase referred to declared power at site conditions; P_{me}: declared power mean effective pressure

2.7.8 Summary tables

Diesel engines installed on ships without automation notations are to be equipped with monitoring equipment as detailed in Tab 4 or Tab 5 for main propulsion, in Tab 6 for auxiliary services and in Tab 7 for emergency respectively.

For ships assigned with a restricted navigation notation, the acceptance of a reduction in the monitoring equipment required in Tab 4, Tab 5 and Tab 6 may be considered.

The alarms are to be visual and audible.

The indicators are to be fitted at a normally attended position (on the engine or at the local control station).

Table 4 : Monitoring of main propulsion cross-head (slow speed) diesel engines

Symbol convention H = High, HH = High high, G = group alarm L = Low, LL = Low low, I = individual alarm X = function is required, R = remote	Monitoring		Automatic control				
			Main Engine			Auxiliary	
Identification of system parameter	Alarm	Indication	Slow-down	Shut-down	Control	Stand by Start	Stop
Fuel oil pressure after filter (engine inlet)		local					
Fuel oil viscosity before injection pumps or fuel oil temperature before injection pumps (for engine running on heavy fuel)		local					
Leakage from high pressure pipes where required	H						
Lubricating oil to main bearing and thrust bearing pressure	L	local					
	LL			X			
Lubricating oil to cross-head bearing pressure when separate	L	local					
	LL			X			
Lubricating oil to camshaft pressure when separate	L	local					
	LL			X			
Turbocharger lubricating oil inlet pressure		local					
Lubricating oil inlet temperature		local					
Thrust bearing pads or bearing outlet temperature	H	local					
Main, crank, cross-head bearing, oil outlet temp	H						
Oil mist concentration in crankcase (or engine bearing temperature monitors or equivalent devices) **(5)**	H		X				
Cylinder fresh cooling water system inlet pressure	L	local **(3)**					
Cylinder fresh cooling water outlet temperature or, when common cooling space without individual stop valves, the common cylinder water outlet temperature		local					
Piston coolant inlet pressure on each cylinder **(1)**	L	local					
Piston coolant outlet temperature on each cylinder **(1)**		local					
Piston coolant outlet flow on each cylinder **(1)** **(2)**	L						
Speed of turbocharger		local					
Scavenging air receiver pressure		local					
Scavenging air box temperature (detection of fire in receiver)		local					
Exhaust gas temperature		local **(4)**					
Engine speed / direction of speed (when reversible)		local					
	H			X			
Fault in the electronic governor system	X						

(1) Not required, if the coolant is oil taken from the main cooling system of the engine
(2) Where outlet flow cannot be monitored due to engine design, alternative arrangement may be accepted
(3) For engines of 220 KW and above
(4) Indication is required after each cylinder, for engines of 500 kW/cylinder and above
(5) For engine of 2250 KW and above or having cylinders of more than 300 mm bore

Table 5 : Monitoring of main propulsion trunk-piston (medium or high speed) engines

Symbol convention H = High, HH = High high, G = group alarm L = Low, LL = Low low, I = individual alarm X = function is required, R = remote	Monitoring		Automatic control				
			Main Engine			Auxiliary	
Identification of system parameter	Alarm	Indication	Slow-down	Shut-down	Control	Stand by Start	Stop
Fuel oil pressure after filter (engine inlet)		local					
Fuel oil viscosity before injection pumps or fuel oil temperature before injection pumps (for engine running on heavy fuel)		local					
Leakage from high pressure pipes where required	H						
Lubricating oil to main bearing and thrust bearing pressure	L	local					
	LL			X			
Lubricating oil filter differential pressure	H	local					
Turbocharger lubricating oil inlet pressure **(1)**		local					
Lubricating oil inlet temperature		local					
Oil mist concentration in crankcase (or engine bearing temperature monitors or equivalent devices) **(3)**	H			X			
Cylinder fresh cooling water outlet temperature or, when common cooling space without individual stop valves, the common cylinder water outlet temperature		local					
Scavenging air receiver pressure		local					
Scavenging air box temperature (detection of fire in receiver)		local					
Exhaust gas temperature		local **(2)**					
Engine speed / direction of speed (when reversible)		local					
	H			X			
Fault in the electronic governor system	X						

(1) If without integrated self-contained oil lubrication system
(2) Indication is required after each cylinder, for engines of 500 kW/cylinder and above
(3) For engine of 2250 KW and above or having cylinders of more than 300 mm bore

Table 6 : Monitoring of trunk-piston diesel engines used for auxiliary services

Symbol convention H = High, HH = High high, G = group alarm L = Low, LL = Low low, I = individual alarm X = function is required, R = remote	Monitoring		Automatic control				
			Engine			Auxiliary	
Identification of system parameter	Alarm	Indication	Slow-down	Shut-down	Control	Stand by Start	Stop
Fuel oil viscosity or temperature before injection (for engine running on heavy fuel)		local					
Fuel oil pressure		local					
Fuel oil leakage from high pressure pipes	H						
Lubricating oil pressure	L	local		X			
Oil mist concentration in crankcase (or engine bearing temperature monitors or equivalent devices) **(1)**	H			X			
Pressure or flow of cooling water, if not connected to main system	L	local					
Temperature of cooling water or cooling air		local					
Engine speed		local					
	H			X			
Fault in the electronic governor system	X						

(1) For engine of 2250 KW and above or having cylinders of more than 300 mm bore

Table 7 : Monitoring of emergency diesel engines

Symbol convention H = High, HH = High high, G = group alarm L = Low, LL = Low low, I = individual alarm X = function is required, R = remote	Monitoring		Automatic control				
			Engine			Auxiliary	
Identification of system parameter	Alarm	Indication	Slow-down	Shut-down	Control	Stand by Start	Stop
Fuel oil leakage from high pressure pipes (fuel injection pipes and common rails)	X	local					
Lubricating oil temperature **(1)**	H	local					
Lubricating oil pressure	L	local					
Activation of oil mist detection arrangements (or activation of the temperature monitoring systems or equivalent devices of: • the engine main and crank bearing oil outlet; or • the engine main and crank bearing) **(2)**	H	local					
Pressure or flow of cooling water **(1)**	L	local					
Temperature of cooling water or cooling air		local					
Engine speed		local					
	H			X **(1)**			

(1) Not applicable to emergency generator of less than 220 kW
(2) For engines having a power of more than 2250kW or a cylinder bore of more than 300 mm
Note 1: The safety and alarm systems are to be designed to 'fail safe'. The characteristics of the 'fail safe' operation are to be evaluated on the basis not only of the system and its associated machinery, but also the complete installation, as well as the ship.
Note 2: Regardless of the engine output, if shutdowns additional to those above specified except for the overspeed shutdown, they are to be automatically overridden when the engine is in automatic or remote control mode during navigation.
Note 3: The alarm system is to function in accordance with AUT notation, with additional requirements that grouped alarms are to be arranged on the bridge.
Note 4: In addition to the fuel oil control from outside the space, a local means of engine shutdown is to be provided.
Note 5: The local indications are to be provided within the same space as the diesel engines and are to remain operational in the event of failure of the alarm and safety systems.

3 Arrangement and installation

3.1 Starting arrangements

3.1.1 Mechanical air starting

a) Air starting the main and auxiliary engines is to be arranged in compliance with Ch 1, Sec 10, [17.3.1].

b) The total capacity of air compressors and air receivers is to be in compliance with Ch 1, Sec 10, [17.3.2] and Ch 1, Sec 10, [17.3.3].

c) The main starting air arrangements for main propulsion or auxiliary diesel engines are to be adequately protected against the effects of backfiring and internal explosion in the starting air pipes. To this end, the following safety devices are to be fitted:

- An isolating non-return valve, or equivalent, at the starting air supply connection to each engine.
- A bursting disc or flame arrester:
  - in way of the starting valve of each cylinder, for direct reversing engines having a main starting air manifold
  - at least at the supply inlet to the starting air manifold, for non-reversing engines.

  The bursting disc or flame arrester above may be omitted for engines having a bore not exceeding 230 mm.

Other protective devices will be specially considered by the Society.

The requirements of this item c) do not apply to engines started by pneumatic motors.

d) Compressed air receivers are to comply with the requirements of Ch 1, Sec 3. Compressed air piping and associated air compressors are to comply with the requirements of Ch 1, Sec 10.

3.1.2 Electrical starting

a) Where main internal combustion engines are arranged for electrical starting, at least two separate batteries are to be fitted.

The arrangement is to be such that the batteries cannot be connected in parallel.

Each battery is to be capable of starting the main engine when in cold and ready to start condition.

The combined capacity of batteries is to be sufficient to provide within 30 min, without recharging, the number of starts required in [3.1.1] b) in the event of air starting.

b) Electrical starting arrangements for auxiliary engines are to have two separate storage batteries or may be supplied by two separate circuits from main engine storage batteries when these are provided. In the case of a single auxiliary engine, one battery is acceptable. The combined capacity of the batteries is to be sufficient for at least three starts for each engine.

c) The starting batteries are only to be used for starting and for the engine's alarm and monitoring. Provision is to be made to maintain the stored energy at all times.

d) Each charging device is to have at least sufficient rating for recharging the required capacity of batteries within 6 hours.

3.1.3 Special requirements for starting arrangements for emergency generating sets

a) Emergency generating sets are to be capable of being readily started in their cold condition at a temperature of 0°C. If this is impracticable, or if lower temperatures are likely to be encountered, provision acceptable to the Society shall be made for the maintenance of heating arrangements, to ensure ready starting of the generating sets.

b) Each emergency generating set arranged to be automatically started shall be equipped with starting devices approved by the Society with a stored energy capability of at least three consecutive starts.

The source of stored energy shall be protected to preclude critical depletion by the automatic starting system, unless a second independent means of starting is provided. In addition, a second source of energy shall be provided for an additional three starts within 30 minutes, unless manual starting can be demonstrated to be effective.

c) The stored energy is to be maintained at all times, as follows:

- *electrical and hydraulic starting systems shall be maintained from the emergency switchboard*
- *compressed air starting systems shall be provided in accordance with Ch 1, Sec 10, [17.3.4].*

d) Where automatic starting is not required, manual starting, such as manual cranking, inertia starters, manually charged hydraulic accumulators, or powder charge cartridges, is permissible where this can be demonstrated as being effective.

e) When manual starting is not practicable, the requirements of b) and c) are to be complied with, except that starting may be manually initiated.

3.2 Turning gear

3.2.1 Each engine is to be provided with hand-operated turning gear; where deemed necessary, the turning gear is to be both hand and mechanically-operated.

The turning gear engagement is to inhibit starting operations.

3.3 Trays

3.3.1 Trays fitted with means of drainage are to be provided in way of the lower part of the crankcase and, in general, in way of the parts of the engine, where oil is likely to spill in order to collect the fuel oil or lubricating oil dripping from the engine.

3.4 Exhaust gas system

3.4.1 In addition to the requirements given in Ch 1, Sec 10, the exhaust system is to be efficiently cooled or insulated in such a way that the surface temperature does not exceed 220°C (see also Ch 1, Sec 1, [3.7]).

4 Type tests, material tests, workshop inspection and testing, certification

4.1 Type testing

4.1.1 Objectives

The type testing is to be arranged to represent typical foreseen service load profiles, as specified by the engine builder, as well as to cover for required margins due to fatigue scatter and reasonably foreseen in-service deterioration. This applies to:

- Parts subjected to high cycle fatigue (HCF) such as connecting rods, cams, rollers and spring tuned dampers where higher stresses may be provided by means of elevated injection pressure, cylinder maximum pressure, etc.
- Parts subjected to low cycle fatigue (LCF) such as "hot" parts when load profiles such as idle - full load - idle (with steep ramps) are frequently used.
- Operation of the engine at limits as defined by its specified alarm system, such as running at maximum permissible power with the lowest permissible oil pressure and/or highest permissible oil inlet temperature.

4.1.2 Validity

a) Type testing is required for every new engine type intended for installation onboard ships subject to classification.

b) A type test carried out for a particular type of engine at any place of manufacture will be accepted for all engines of the same type built by licensees or the licensor, subject to each place of manufacture being found to be acceptable to the Society.

c) A type of engine is defined by:

- bore and stroke
- injection method (direct or indirect)
- valve and injection operation (by cams or electronically controlled)
- kind of fuel (liquid, dual-fuel, gaseous)
- working cycle (4-stroke, 2-stroke)
- turbo-charging system (pulsating or constant pressure)
- the charging air cooling system (e.g. with or without intercooler)
- cylinder arrangement (in-line or V) (see Note 1)
- cylinder power, speed and cylinder pressures (see Note 2)

Note 1: One type test will be considered adequate to cover a range of different numbers of cylinders. However, a type test of an in-line engine may not always cover the V-version. At the discretion of the Society, separate type tests may be required for the V-version. On the other hand, a type test of a V-engine covers the in-line engines, unless the bmep is higher.

Items such as axial crankshaft vibration, torsional vibration in camshaft drives, and crankshafts, etc. may vary considerably with the number of cylinders and may influence the choice of engine to be selected for type testing.

Note 2: The engine is type approved up to the tested ratings and pressures (100% corresponding to MCR).

Provided documentary evidence of successful service experience with the classified rating of 100% is submitted, an increase (if design approved, only crankshaft calculation and crankshaft drawings, if modified) may be permitted without a new type test if the increase from the type tested engine is within:

- 5% of the maximum combustion pressure, or
- 5% of the mean effective pressure, or
- 5% of the rpm

Providing maximum power is not increased by more than 10%, an increase of maximum approved power may be permitted without a new type test provided engineering analysis and evidence of successful service experience in similar field applications (even if the application is not classified) or documentation of internal testing are submitted if the increase from the type tested engine is within:

- 10% of the maximum combustion pressure, or
- 10% of the mean effective pressure, or
- 10% of the rpm

d) De-rated engine

If an engine has been design approved, and internal testing per Stage A (see [4.1.4]) is documented to a rating higher than the one type tested, the Type Approval may be extended to the increased power/bmep/rpm upon submission of an Extended Delivery Test Report at:

- Test at over speed (only if nominal speed has increased)
- Rated power, i.e. 100% output at 100% torque and 100% speed corresponding to load point 1 (see Fig 2), 2 measurements with one running hour in between
- Maximum permissible torque (normally 110%) at 100% speed corresponding to load point 3 (see Fig 2) or maximum permissible power (normally 110%) and speed according to nominal propeller curve corresponding to load point 3a (see Fig 2), 0,5 hour
- 100% power at maximum permissible speed corresponding to load point 2 (see Fig 2), 0,5 hour.

e) An integration test demonstrating that the response of the complete mechanical, hydraulic and electronic system is as predicted maybe carried out for acceptance of sub-systems (Turbo Charger, Engine Control System, Dual Fuel, Exhaust Gas treatment…) separately approved. The scope of these tests is to be proposed by the designer/licensor taking into account of impact on engine.

Figure 2 : Load points

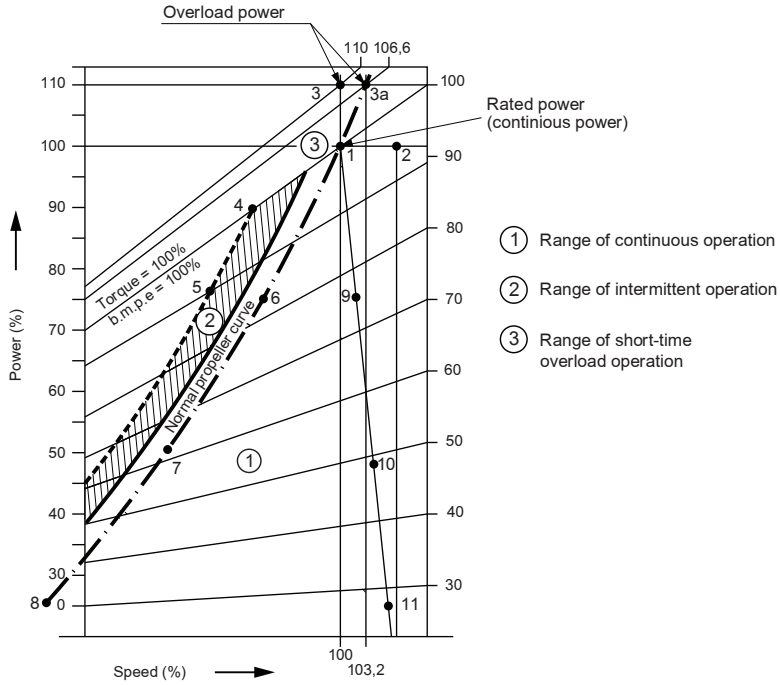

4.1.3 Safety precautions

a) Before any test run is carried out, all relevant equipment for the safety of attending personnel is to be made available by the manufacturer/shipyard and is to be operational, and its correct functioning is to be verified.

b) This applies especially to crankcase explosive conditions protection, but also over-speed protection and any other shut down function.

c) The inspection for jacketing of high-pressure fuel oil lines and proper screening of pipe connections (as required in [4.1.7], item i) is also to be carried out before the test runs.

d) Interlock test of turning gear is to be performed when installed.

4.1.4 Test programme

a) The type testing is divided into 3 stages:
   - Stage A - internal tests.
     This includes some of the testing made during the engine development, function testing, and collection of measured parameters and records of testing hours. The results of testing required by the Society or stipulated by the designer are to be presented to the Society before starting stage B.
   - Stage B - witnessed tests.
     This is the testing made in the presence of the Surveyor.
   - Stage C - component inspection.
     This is the inspection of engine parts to the extent as required by the Society.

b) The complete type testing program is subject to approval by the Society. The extent the Surveyor's attendance is to be agreed in each case, but at least during stage B and C.

c) Testing prior to the witnessed type testing (stage B and C), is also considered as a part of the complete type testing program.

d) Upon completion of complete type testing (stage A through C), a type test report is to be submitted to the Society for review. The type test report is to contain:
   - overall description of tests performed during stage A. Records are to be kept by the builders QA management for presentation to the Society.
   - detailed description of the load and functional tests conducted during stage B.
   - inspection results from stage C.

e) High speed engines for marine use are normally to be subjected to an endurance test of 100 hours at full load. Omission or simplification of the type test may be considered for the type approval of engines with long service experience from non-marine fields or for the extension of type approval of engines of a well-known type, in excess of the limits given in [4.1.2].

   Propulsion engines for ships having the service notation **HSC-CAT A**, **HSC-CAT B**, **HSC**, **high speed craft** or **light ship**, high speed craft or light ship that may be used for frequent load changes from idle to full are normally to be tested with at least 500 cycles (idle - full load - idle) using the steepest load ramp that the control system (or operation manual if not automatically controlled) permits. The duration at each end is to be sufficient for reaching stable temperatures of the hot parts.

4.1.5 Measurements and recordings

a) During all testing the ambient conditions (air temperature, air pressure and humidity) are to be recorded.

b) As a minimum, the following engine data are to be measured and recorded:
- Engine r.p.m.
- Torque
- Maximum combustion pressure for each cylinder (see Note 1)
- Mean indicated pressure for each cylinder (see Note 1)
- Charging air pressure and temperature
- Exhaust gas temperature
- Fuel rack position or similar parameter related to engine load
- Turbocharger speed
- All engine parameters that are required for control and monitoring for the intended use (propulsion, auxiliary, emergency).

Note 1: For engines where the standard production cylinder heads are not designed for such measurements, a special cylinder head made for this purpose may be used. In such a case, the measurements may be carried out as part of Stage A and are to be properly documented. Where deemed necessary e.g. for dual fuel engines, the measurement of maximum combustion pressure and mean indicated pressure may be carried out by indirect means, provided the reliability of the method is documented.

Calibration records for the instrumentation used to collect data as listed above are to be presented to - and reviewed by the attending Surveyor.

Additional measurements may be required in connection with the design assessment.

4.1.6 Stage A - internal tests

a) During the internal tests, the engine is to be operated at the load points important for the engine designer and the pertaining operating values are to be recorded. The load conditions to be tested are also to include the testing specified in the applicable type approval programme.

b) At least the following conditions are to be tested:
- Normal case:

  The load points 25%, 50%, 75%, 100% and 110% of the maximum rated power for continuous operation, to be made along the normal (theoretical) propeller curve and at constant speed for propulsion engines (if applicable mode of operation i.e. driving controllable pitch propellers), and at constant speed for engines intended for generator sets including a test at no load and rated speed.
- The limit points of the permissible operating range. These limit points are to be defined by the engine manufacturer.
- For high speed engines, the 100 hr full load test and the low cycle fatigue test apply as required in connection with the design assessment.
- Specific tests of parts of the engine, required by the Society or stipulated by the designer.

4.1.7 Stage B - witnessed tests

a) The tests listed below are to be carried out in the presence of a Surveyor. The achieved results are to be recorded and signed by the attending Surveyor after the type test is completed.

b) The over-speed test is to be carried out and is to demonstrate that the engine is not damaged by an actual engine overspeed within the overspeed shutdown system set-point. This test may be carried out at the manufacturer's choice either with or without load during the speed overshoot.

c) The engine is to be operated according to the power and speed diagram (see Fig 2). The data to be measured and recorded when testing the engine at the various load points have to include all engine parameters listed in [4.1.5]. The operating time per load point depends on the engine size (achievement of steady state condition) and on the time for collection of the operating values. Normally, an operating time of 0,5 hour can be assumed per load point, however sufficient time should be allowed for visual inspection by the Surveyor.

d) The load points (see Fig 2) are:
- Rated power (MCR), i.e. 100% output at 100% torque and 100% speed corresponding to load point 1, normally for 2 hours with data collection with an interval of 1 hour. If operation of the engine at limits as defined by its specified alarm system (e.g. at alarm levels of lub oil pressure and inlet temperature) is required, the test should be made here
- 100% power at maximum permissible speed corresponding to load point 2
- Minimum permissible speed at 100% torque, corresponding to load point 4
- Minimum permissible speed at 90% torque corresponding to load point 5 (Applicable to propulsion engines only).
- Part loads e.g. 75%, 50% and 25% of rated power and speed according to nominal propeller curve (i.e. 90.8%, 79.3% and 62.9% speed) corresponding to points 6, 7 and 8 or at constant rated speed setting corresponding to points 9, 10 and 11, depending on the intended application of the engine
- Crosshead engines not restricted for use with C.P. propellers are to be tested with no load at the associated maximum permissible engine speed.

e) During all these load points, engine parameters are to be within the specified and approved values.

f) Operation with damaged turbocharger:

For 2-stroke propulsion engines, the achievable continuous output is to be determined in the case of turbocharger damage.

Engines intended for single propulsion with a fixed pitch propeller are to be able to run continuously at a speed (r.p.m.) of 40% of full speed along the theoretical propeller curve when one turbocharger is out of operation. (The test can be performed by either bypassing the turbocharger, fixing the turbocharger rotor shaft or removing the rotor).

g) Functional tests:

- Verification of the lowest specified propulsion engine speed according to the nominal propeller curve as specified by the engine designer (even though it works on a water- brake). During this operation, no alarm shall occur.
- Starting tests, for non-reversible engines and/or starting and reversing tests, for reversible engines, for the purpose of determining the minimum air pressure and the consumption for a start.
- Governor tests: tests for compliance with [2.7] are to be carried out.

h) Integration test:

For electronically controlled diesel engines, integration tests are to verify that the response of the complete mechanical, hydraulic and electronic system is as predicted for all intended operational modes. The scope of these tests is to be agreed with the Society for selected cases based on the FMEA required in Tab 1.

i) Fire protection measures:

Screening of pipe connections in piping containing flammable liquids and insulation of hot surfaces:

- The engine is to be inspected for jacketing of high-pressure fuel oil lines, including the system for the detection of leakage, and proper screening of pipe connections in piping containing flammable liquids.
- Proper insulation of hot surfaces is to be verified while running the engine at 100% load, alternatively at the overload approved for intermittent use. Readings of surface temperatures are to be done by use of Infrared Thermoscanning Equipment. Equivalent measurement equipment may be used when so approved by the Society. Readings obtained are to be randomly verified by use of contact thermometers.

4.1.8 Stage C - Opening up for Inspections

a) The crankshaft deflections are to be measured in the specified (by designer) condition (except for engines where no specification exists).

b) High speed engines for marine use are normally to be stripped down for a complete inspection after the type test.

c) For all the other engines, after the test run the components of one cylinder for in-line engines and two cylinders for V-engines are to be presented for inspection as follows (engines with long service experience from non-marine fields can have a reduced extent of opening):

- piston removed and dismantled
- crosshead bearing dismantled
- guide planes
- connecting rod bearings (big and small end) dismantled (special attention to serrations and fretting on contact surfaces with the bearing backsides)
- main bearing dismantled
- cylinder liner in the installed condition
- cylinder head, valves disassembled
- cam drive gear or chain, camshaft and crankcase with opened covers. (The engine must be turnable by turning gear for this inspection.)

d) For V-engines, the cylinder units are to be selected from both cylinder banks and different crank throws.

e) If deemed necessary by the surveyor, further dismantling of the engine may be required.

4.1.9 If an electronically controlled diesel engine has been type tested as a conventional engine the Society may waive tests required by this article provided the results of the individual tests would be similar.

4.2 Material and non-destructive tests for engine components

4.2.1 List of components

Engine components are to be tested in accordance with Tab 8 and with the requirements of NR216 Materials and Welding.

Symbols used on Tab 8 are defined as below:

C : Society certificate

Cc : Chemical composition

CD : Crack detection by MPI (magnetic particul inspection) or DP (dye penetration inspection)

CH : Crosshead engines

D : Cylinder bore diameter (mm)

GJL : Gray cast iron

GJS : Spheroidal graphite cast iron

GS : Cast steel

M : Mechanical properties

TR : Test report

UT : Ultrasonic testing

W : Work certificate

X : Visual examination of accessible surfaces by the Surveyor.

For components and materials not listed in Tab 8, consideration shall be given by the Society upon full details being submitted and reviewed.

Table 8 : Summary of required documentation for engine components

No.	Part **(1) (2) (3) (4) (5)**	Material properties **(6)**	Non-destructive examination **(7)**	Hydraulic testing **(8)**	Dimensional inspection, including surface condition	Visual inspection (Surveyor)	Applicable to engines:	Component certificate
1	Welded bedplate	W(Cc+M)	W(UT+CD)			fit-up + post-welding	All	C
2	Bearing transverse girders GS	W(Cc+M)	W(UT+CD)			X	All	C
3	Welded frame box	W(Cc+M)	W(UT+CD)			fit-up + post-welding	All	C
4	Cylinder block GJL			W **(9)**			> 400 kW/cyl	
5	Cylinder block GJS			W **(9)**			> 400 kW/cyl	
6	Welded cylinder frames	W(Cc+M)	W(UT+CD)			fit-up + post-welding	CH	C
7	Engine block GJL			W **(9)**			> 400 kW/cyl	
8	Engine block GJS	W(M)		W **(9)**			> 400 kW/cyl	
9	Cylinder liner	W(Cc+M)		W **(9)**			D > 300mm	
10	Cylinder head GJL			W			D > 300mm	
11	Cylinder head GJS			W			D > 300mm	
12	Cylinder head GS	W(Cc+M)	W(UT+CD)	W		X	D > 300mm	C
13	Forged cylinder head	W(Cc+M)	W(UT+CD)	W		X	D > 300mm	C
14	Piston crown GS	W(Cc+M)	W(UT+CD)			X	D > 400mm	C
15	Forged piston crown	W(Cc+M)	W(UT+CD)			X	D > 400mm	C
16	Crankshaft: made in one piece	C(Cc+M)	W(UT+CD)		W	Random, of fillets and oil bores	All	C
17	Semi-built Crankshaft (Crankthrow, forged main journal and journals with flange)	C(Cc+M)	W(UT+CD		W	Random, of fillets and shrink fittings	All	C
18	Exhaust gas valve cage			W			CH	
19	Piston Rod, if applicable	C(Cc+M)	W(UT+CD			Random	D > 400mm CH	C
20	Cross head	C(Cc+M)	W(UT+CD)			Random	CH	C

No.	Part **(1) (2) (3) (4) (5)**	Material properties **(6)**	Non-destructive examination **(7)**	Hydraulic testing **(8)**	Dimensional inspection, including surface condition	Visual inspection (Surveyor)	Applicable to engines:	Component certificate
21	Connecting rod with cap	C(Cc+M)	W(UT+CD)		W	Random, of all surfaces, in particular those shot peened	All	C
22	Coupling bolts for crankshaft	C(Cc+M)	W(UT+CD)		W	Random, of interference fit	All	C
23	Bolts and studs for main bearings	W(Cc+M)	W(UT+CD)				D > 300mm	
24	Bolts and studs for cylinder heads	W(Cc+M)	W(UT+CD)				D > 300mm	
25	Bolts and studs for connecting rods	W(Cc+M)	W(UT+CD)		TR of thread making		D > 300mm	
26	Tie rod	W(Cc+M)	W(UT+CD)		TR of thread making	Random	CH	C
27	High pressure fuel injection pump body **(10)**	W(Cc+M)		W			D > 300mm	W **(10)**
		W(Cc+M)		TR			D ≤ 300mm	
28	High pressure fuel injection valves (only for those not autofretted) **(10)**			W			D > 300mm	W **(10)**
				TR			D ≤ 300mm	
29	High pressure fuel injection pipes including common fuel rail **(10)**	W(Cc+M)		W for those that are not autofretted			D > 300mm	W **(10)**
		W(Cc+M)		TR for those that are not autofretted			D ≤ 300mm	
30	High pressure common servo oil system **(10)**	W(Cc+M)		W			D > 300mm	W **(10)**
		W(Cc+M)		TR			D ≤ 300mm	
31	Cooler, both sides **(10) (11)**	W(Cc+M)		W			D > 300mm	W **(12)**
32	Accumulator **(10)**	W(Cc+M)		W			All engines with accumulators with a capacity of > 0,5 l	W **(12)**
33	Piping, pumps, actuators, etc. for hydraulic drive of valves, if applicable **(10)**	W(Cc+M)		W			> 800 kW/cyl	
34	Engine driven pumps (oil, water, fuel, bilge) other than pumps referred to in item 27 and 33 **(10)**			W			> 800 kW/cyl	
35	Bearings for main, crosshead, and crankpin	TR(Cc)	TR (UT for full contact between base material and bearing metal)		W		> 800 kW/cyl	

No.	Part (1) (2) (3) (4) (5)	Material properties (6)	Non-destructive examination (7)	Hydraulic testing (8)	Dimensional inspection, including surface condition	Visual inspection (Surveyor)	Applicable to engines:	Component certificate

Note 1: Symbols used in this Table are listed in [4.2.1]

(1) For turbochargers, see Ch 1, Sec 17

(2) Crankcase explosion relief valves are to be type tested in accordance with Ch 1, App 4 and documented according to [2.3.4]

(3) Oil mist detection systems are to be type tested in accordance with Ch 3, App 1and documented according to [2.3.5]

(4) For Speed governor and overspeed protective devices, see [2.7]

(5) Explosion Relief Devices for Air inlet and Exhaust of engines using natural gas as Fuel are to be type tested in accordance with Ch 1, App 8

(6) Material properties include chemical composition and mechanical properties, and also surface treatment such as surface hardening (hardness, depth and extent), peening and rolling (extent and applied force)

(7) Non-destructive examination means e.g. ultrasonic testing, crack detection by MPI or DP. When certain NDE method on the finished component is impractical (for example UT for items 12/13), the NDE method can be performed at earlier appropriate stages in the production of the component, see [4.4.3], item b)

(8) Hydraulic testing is applied on the water/oil side of the component. Items are to be tested by hydraulic pressure at the pressure equal to 1,5 times the maximum working pressure. High pressure parts of the fuel injection system are to be tested by hydraulic pressure at the pressure equal to 1,5 maximum working pressure or maximum working pressure plus 300 bar, whichever is the less. Where design or testing features may require modification of these test requirements, special consideration may be given.

(9) Hydraulic testing is also required for those parts filled with cooling water and having the function of containing the water which is in contact with the cylinder or cylinder liner

(10) Material certification requirements for pumps and piping components are dependent on the operating pressure and temperature. Requirements given in this Table apply unless alternative requirements are given in Ch 1, Sec 10, Tab 40

(11) Charge air coolers need only be tested on the water side

(12) Material and component certifications are to follow the requirements given in Ch 1, Sec 3 for pressure vessels. Depending on their class, a design assessment may be required

4.3 Factory Acceptance Test

4.3.1 Safety precautions

a) Before any test run is carried out, all relevant equipment for the safety of attending personnel is to be made available by the manufacturer / shipyard and is to be operational.

b) This applies especially to crankcase explosive conditions protection, but also to over-speed protection and any other shut down function.

c) The overspeed protective device is to be set to a value, which is not higher than the overspeed value that was demonstrated during the type test for that engine. This set point shall be verified by the surveyor.

4.3.2 General

a) Before any official testing, the engines shall be run-in as prescribed by the engine manufacturer.

b) Adequate test bed facilities for loads as required in [4.3.3] shall be provided. All fluids used for testing purposes such as fuel, lubrication oil and cooling water are to be suitable for the purpose intended, e.g. they are to be clean, preheated if necessary and cause no harm to engine parts. This applies to all fluids used temporarily or repeatedly for testing purposes only.

c) Engines are to be inspected for:

- Jacketing of high-pressure fuel oil lines including the system used for the detection of leakage.
- Screening of pipe connections in piping containing flammable liquids.
- Insulation of hot surfaces by taking random temperature readings that are to be compared with corresponding readings obtained during the type test. This shall be done while running at the rated power of engine. Use of contact thermometers may be accepted at the discretion of the attending Surveyor. If the insulation is modified subsequently to the Type Approval Test, the Society may request temperature measurements as required by [4.1.7], item g).

d) These inspections are normally to be made during the works trials by the manufacturer and the attending surveyor, but at the discretion of the Society parts of these inspections may be postponed to the shipboard testing.

4.3.3 Works trials (Factory Acceptance Test)

a) Objectives

The purpose of the works trials is to verify design premises such as power, safety against fire, adherence to approved limits (e.g. maximum pressure), and functionality and to establish reference values or base lines for later reference in the operational phase.

b) Records

1) The following environmental test conditions are to be recorded:

- Ambient air temperature
- Ambient air pressure
- Atmospheric humidity

2) For each required load point, the following parameters are normally to be recorded:

- Power and speed
- Fuel index (or equivalent reading)
- Maximum combustion pressures (only when the cylinder heads installed are designed for such measurement)
- Exhaust gas temperature before turbine and from each cylinder (to the extent that monitoring is required in Ch 1, Sec 17 and [2.7])
- Charge air temperature
- Charge air pressure
- Turbocharger speed (to the extent that monitoring is required in Ch 1, Sec 17).

3) Calibration records for the instrumentation are, upon request, to be presented to the attending Surveyor.

4) For all stages at which the engine is to be tested, the pertaining operational values are to be measured and recorded by the engine manufacturer. All results are to be compiled in an acceptance protocol to be issued by the engine manufacturer. This also includes crankshaft deflections if considered necessary by the engine designer.

5) In each case, all measurements conducted at the various load points are to be carried out at steady state operating conditions. However, for all load points provision should be made for time needed by the Surveyor to carry out visual inspections. The readings for MCR, i.e. 100% power (rated maximum continuous power at corresponding rpm) are to be taken at least twice at an interval of normally 30 minutes.

c) Test loads

1) Test loads for various engine applications are given below. In addition, the scope of the trials may be expanded depending on the engine application, service experience, or other relevant reasons.

Note 1: Alternatives to the detailed tests may be agreed between the manufacturer and the Society when the overall scope of tests is found to be equivalent.

2) Propulsion engines driving propeller or impeller only:

- 100% power (MCR) at corresponding speed n_0: at least 60 min.
- 110% power at engine speed $1{,}032n_0$: Records to be taken after 15 minutes or after steady conditions have been reached, whichever is shorter.

Note 2: 110% test load is only required once for each different engine/turbocharger configuration.

- Approved intermittent overload (if applicable): testing for duration as agreed with the manufacturer.
- 90% (or normal continuous cruise power), 75%, 50% and 25% power in accordance with the nominal propeller curve, the sequence to be selected by the engine manufacturer.
- Reversing manoeuvres (if applicable).

Note 3: After running on the test bed, the fuel delivery system is to be so adjusted that overload power cannot be given in service, unless intermittent overload power is approved by the Society. In that case, the fuel delivery system is to be blocked to that power.

3) Engines driving generators for electric propulsion:

- 100% power (MCR) at corresponding speed n_0: at least 60 min.
- 110% power at engine speed n_0: 15 min. - after having reached steady conditions.
- Governor tests for compliance with [2.7] are to be carried out.
- 75%, 50% and 25% power and idle, the sequence to be selected by the engine manufacturer.

Note 4: After running on the test bed, the fuel delivery system is to be adjusted so that full power plus a 10% margin for transient regulation can be given in service after installation onboard.

The transient overload capability is required so that the required transient governing characteristics are achieved also at 100% loading of the engine, and also so that the protection system utilised in the electric distribution system can be activated before the engine stalls.

4) Engines driving generators for auxiliary purposes:

Tests to be performed as in item c) 3).

5) Propulsion engines also driving power take off (PTO) generator:
   - 100% power (MCR) at corresponding speed n_0: at least 60 min.
   - 110% power at engine speed n_0: 15 min. - after having reached steady conditions.
   - Approved intermittent overload (if applicable): testing for duration as agreed with the manufacturer.
   - 90% (or normal continuous cruise power), 75%, 50% and 25% power in accordance with the nominal propeller curve or at constant speed n_0, the sequence to be selected by the engine manufacturer.

Note 5: After running on the test bed, the fuel delivery system is to be adjusted so that full power plus a margin for transient regulation can be given in service after installation onboard. The transient overload capability is required so that the electrical protection of downstream system components is activated before the engine stalls. This margin may be 10% of the engine power but at least 10% of the PTO power.

6) Engines driving auxiliaries:
   - 100% power (MCR) at corresponding speed n_0: at least 30 min.
   - 110% power at engine speed n_0: 15 min. - after having reached steady conditions.
   - Approved intermittent overload (if applicable): testing for duration as agreed with the manufacturer.
   - For variable speed engines, 75%, 50% and 25% power in accordance with the nominal power consumption curve, the sequence to be selected by the engine manufacturer.

Note 6: After running on the test bed, the fuel delivery system is normally to be so adjusted that overload power cannot be delivered in service, unless intermittent overload power is approved. In that case, the fuel delivery system is to be blocked to that power.

d) Turbocharger matching with engine

1) Compressor chart

Turbochargers shall have a compressor characteristic that allows the engine, for which it is intended, to operate without surging during all operating conditions and also after extended periods in operation.

For abnormal, but permissible, operation conditions, such as misfiring and sudden load reduction, no continuous surging shall occur.

In this item, surging and continuous surging are defined as follows:
- Surging means the phenomenon, which results in a high pitch vibration of an audible level or explosion-like noise from the scavenger area of the engine.
- Continuous surging means that surging happens repeatedly and not only once.

2) Surge margin verification

Category C turbochargers used on propulsion engines are to be checked for surge margins during the engine workshop testing as specified below. These tests may be waived if successfully tested earlier on an identical configuration of engine and turbocharger (including same nozzle rings).
- For 4-stroke engines:

  The following shall be performed without indication of surging:
  - With maximum continuous power and speed (=100%), the speed shall be reduced with constant torque (fuel index) down to 90% power.
  - With 50% power at 80% speed (= propeller characteristic for fixed pitch), the speed shall be reduced to 72% while keeping constant torque (fuel index).
- For 2-stroke engines:

  The surge margin shall be demonstrated by at least one of the following methods:
  - The engine working characteristic established at workshop testing of the engine shall be plotted into the compressor chart of the turbocharger (established in a test rig). There shall be at least 10% surge margin in the full load range, i.e. working flow shall be 10% above the theoretical (mass) flow at surge limit (at no pressure fluctuations), or,
  - Sudden fuel cut-off to at least one cylinder shall not result in continuous surging and the turbocharger shall be stabilised at the new load within 20 seconds. For applications with more than one turbocharger the fuel shall be cut-off to the cylinders closest upstream to each turbocharger.

    This test shall be performed at two different engine loads:
    - The maximum power permitted for one cylinder misfiring.
    - The engine load corresponding to a charge air pressure of about 0.6 bar (but without auxiliary blowers running).
  - No continuous surging and the turbocharger shall be stabilised at the new load within 20 seconds when the power is abruptly reduced from 100% to 50% of the maximum continuous power.

e) Integration tests

For electronically controlled engines, integration tests are to be made to verify that the response of the complete mechanical, hydraulic and electronic system is as predicted for all intended operational modes and the tests considered as a system are to be carried out at the works. If such tests are technically unfeasible at the works, however, these tests may be conducted during sea trial. The scope of these tests is to be agreed with the Society for selected cases based on the FMEA required in Tab 1

f) Component inspections

Random checks of components to be presented for inspection after works trials are left to the discretion of the Surveyor.

4.4 Certification

4.4.1 Type approval certificate

a) For each type of engine that is required to be approved, a type approval certificate is to be obtained by the engine designer. The process details for obtaining a type approval certificate are given below (see also [1.2]). This process consists of the engine designer obtaining from the Society:
- drawing and specification approval
- conformity of production
- approval of type testing programme
- type testing of engines
- review of the obtained type testing results
- evaluation of the manufacturing arrangements
- issue of a type approval certificate.

The manufacturing facility of the engine presented for the type approval test is to be assessed in accordance with NR320.

b) Type approval certificate renewal

A renewal of type approval certificates will be granted upon:
- The submission of modified documents or new documents with substantial modifications replacing former documents compared to the previous submission(s), or alternatively,
- A declaration that no substantial modifications have been applied since the last issuance of the type approval certificate.

c) Validity of type approval certificate

The limit of the duration facility of the type approval certificate shall comply with requirements of NR 320. The maximum period of validity of a type approval certificate is 5 years.

The type approval certificate will be invalid if there are substantial modifications in the design, in the manufacturing or control processes or in the characteristics of the materials unless approved in advance by the Society.

4.4.2 Engine certificate

a) Each diesel engine manufactured for a shipboard application is to have an engine certificate. This process consists of the engine builder/licensee obtaining design approval of the engine application specific documents, submitting a comparison list of the production drawings to the previously approved engine design drawings referenced in [4.4.1] forwarding the relevant production drawings and comparison list for the use of the Surveyors at the manufacturing plant and shipyard if necessary, engine testing and upon satisfactorily meeting the Rule requirements, the issuance of an engine certificate.

For those cases when a licensor – licensee agreement does NOT apply, an “engine designer” shall be understood as the entity that has the design rights for the engine type or is delegated by the entity having the design rights to modify the design.

b) Society’s requirements for production facilities comprising manufacturing facilities and processes, machining tools, quality assurance, testing facilities, etc. shall be assessed according to NR320 requirements.

4.4.3 Certification of engine components

a) The engine manufacturer is to have a quality control system that is suitable for the actual engine types to be certified by the Society. The quality control system is also to apply to any sub-suppliers. The Society reserves the right to review the system or parts thereof. Materials and components are to be produced in compliance with all the applicable production and quality instructions specified by the engine manufacturer. The Society requires that certain parts are verified and documented by means of Society Certificate (C), Work Certificate (W) or Test Report (TR).

b) Society Certificate (C)

This is a document issued by the Society stating:
- conformity with Rule requirements
- that the tests and inspections have been carried out on the finished certified component itself, or on samples taken from earlier stages in the production of the component, when applicable
- that the inspection and tests were performed in the presence of the Surveyor or in accordance with an Alternative Survey Scheme according to NR320.

c) Work’s Certificate (W)

This is a document signed by the manufacturer stating:
- conformity with requirements
- that the tests and inspections have been carried out on the finished certified component itself, or on samples taken from earlier stages in the production batch of the component, when applicable
- that the tests were witnessed and signed by a qualified representative of the applicable department of the manufacturer.

A Work's Certificate may be considered equivalent to a Society Certificate and endorsed by the Society under the following cases:

- the test was witnessed by the Society Surveyor; or
- an Alternative Survey Scheme according to NR320 is in place between the Society and the manufacturer or material supplier; or
- the Work's certificate is supported by tests carried out by an accredited third party that is accepted by the Society and independent from the manufacturer and/or material supplier.

d) Test Report (TR)

This is a document signed by the manufacturer stating:

- conformity with requirements
- that the tests and inspections have been carried out on samples from the current production batch.

e) The documents above are used for product documentation as well as for documentation of single inspections such as crack detection, dimensional check, etc. If agreed to by the Society, the documentation of single tests and inspections may also be arranged by filling in results on a control sheet following the component through the production.

f) The Surveyor is to review the TR and W for compliance with the agreed or approved specifications. C means that the Surveyor also witnesses the testing, batch or individual, unless an Alternative Survey Scheme, according to NR320, provides other arrangements.

g) The manufacturer is not exempted from responsibility for any relevant tests and inspections of those parts for which documentation is not explicitly requested by the Society.

The manufacturing process and equipment is to be set up and maintained in such a way that all materials and components can be consistently produced to the required standard. This includes production and assembly lines, machining units, special tools and devices, assembly and testing rigs as well as all lifting and transportation devices.

Section 3 Pressure Equipment

1 General

1.1 Principles

1.1.1 Scope of the Rules

The boilers and other pressure vessels, associated piping systems and fittings are to be of a design and construction adequate for the service for which they are intended and is to be so installed and protected as to reduce to a minimum any danger to persons on board, due regard being paid to moving parts, hot surfaces and other hazards. The design is to have regard to materials used in construction, the purpose for which the equipment is intended, the working conditions to which it will be subjected and the environmental conditions on board.

So these Rules apply to "pressure equipment" for the following requirements:

- be safe in sight of pressure risk
- be safe in sight of other risks, moving parts, hot surfaces
- ensure capability of propulsion and other essential services.

"Pressure equipment" means pressure vessels, piping (Ch 1, Sec 10), safety accessories and pressure accessories.

1.1.2 Overpressure risk

Where main or auxiliary boilers and other pressure vessels or any parts thereof may be subject to dangerous overpressure, means are to be provided where practicable to protect against such excessive pressure.

1.1.3 Propulsion capability

Means are to be provided whereby normal operation of main boilers can be sustained or restored even through one of the essential auxiliaries become inoperative. Special consideration is to be given to the malfunctioning of:

- the source of steam supply
- the boiler feed water systems
- the fuel oil supply system for boilers
- the mechanical air supply for boilers.

However the Society, having regard to overall safety considerations, may accept a partial reduction in propulsion capability from normal operation.

1.1.4 Tests

All boilers and other pressure vessels including their associated fittings which are under internal pressure are to be subjected to appropriate tests including a pressure test before being put into service for the first time (see also [9]).

1.2 Application

1.2.1 Pressure vessels covered by the Rules

The requirements of this Section apply to:

- all fired or unfired pressures vessels of metallic construction, including the associated fittings and mountings with maximum allowable pressure greater than 0,5 bar above atmospheric pressure with the exception of those indicated in [1.2.2]
- all boilers and other steam generators, including the associated fittings and mountings with maximum allowable pressure greater than 0,5 bar above atmospheric pressure with the exception of those indicated in [1.2.2].

1.2.2 Pressure vessels not covered by the Rules

Among others the following boilers and pressure vessels are not covered by the Rules and are to be considered on a case by case basis:

a) boilers with design pressure p > 10 MPa

b) pressure vessel intended for radioactive material

c) equipment comprising casings or machinery where the dimensioning, choice of material and manufacturing rules are based primarily on requirements for sufficient strength, rigidity and stability to meet the static and dynamic operational effects or other operational characteristics and for which pressure is not a significant design factor. Such equipment may include:
   - engines including turbines and internal combustion engines
   - steam engines, gas/steam turbines, turbo-generators, compressors, pumps and actuating devices

d) small pressure vessels included in self-contained domestic equipment.

1.3 Definitions

1.3.1 Pressure vessel

"Pressure vessel" means a housing designed and built to contain fluids under pressure including its direct attachments up to the coupling point connecting it to other equipment. A vessel may be composed of more than one chamber.

1.3.2 Fired pressure vessel

Fired pressure vessel is a pressure vessel which is completely or partially exposed to fire from burners or combustion gases or otherwise heated pressure vessel with a risk of overheating.

a) Boiler

Boiler is one or more fired pressure vessels and associated piping systems used for generating steam or hot water at a temperature above 120°C.

Any equipment directly connected to the boiler, such as economisers, superheaters and safety valves, is considered as part of the boiler, if it is not separated from the steam generator by means of any isolating valve. Piping connected to the boiler is considered as part of the boiler upstream of the isolating valve and as part of the associated piping system downstream of the isolating valve.

b) Thermal oil heater

Thermal oil heater is one or more fired pressure vessels and associated piping systems in which organic liquids (thermal oils) are heated. When heated by electricity thermal oil heater is considered as an unfired pressure vessel.

1.3.3 Unfired pressure vessel

Any pressure vessel which is not a fired pressure vessel is an unfired pressure vessel.

a) Heat exchanger

A heat exchanger is an unfired pressure vessel used to heat or cool a fluid with an another fluid. In general heat exchangers are composed of a number of adjacent chambers, the two fluids flowing separately in adjacent chambers. One or more chambers may consist of bundles of tubes.

b) Steam generator

A steam generator is a heat exchanger and associated piping used for generating steam. In general in these Rules, the requirements for boilers are also applicable for steam generators, unless otherwise indicated.

1.3.4 Safety accessories

"Safety accessories" means devices designed to protect pressure equipment against the allowable limits being exceeded. Such devices include:

- devices for direct pressure limitation, such as safety valves, bursting disc safety devices, buckling rods, controlled safety pressure relief systems, and
- limiting devices, which either activate the means for correction or provide for shutdown or shutdown and lockout, such as pressure switches or temperature switches or fluid level switches and safety related measurement control and regulation devices.

1.3.5 Design pressure

The design pressure is the pressure used by the manufacturer to determine the scantlings of the vessel. This pressure cannot be taken less than the maximum working pressure and is to be limited by the set pressure of the safety valve, as prescribed by the applicable Rules. Pressure is indicated as gauge pressure above atmospheric pressure, vacuum is indicated as negative pressure.

1.3.6 Design temperature

a) Design temperature is the actual metal temperature of the applicable part under the expected operating conditions, as modified in Tab 1. This temperature is to be stated by the manufacturer and is to take in account of the effect of any temperature fluctuations which may occur during the service.

b) The design temperature is not to be less than the temperatures stated in Tab 1, unless specially agreed between the manufacturer and the Society on a case by case basis.

1.3.7 Volume

Volume V means the internal volume of a chamber, including the volume of nozzles to the first connection or weld and excluding the volume of permanent internal parts.

1.3.8 Boiler heating surface

Heating surface is the area of the part of the boiler through which the heat is supplied to the medium, on the side exposed to fire or hot gases.

1.3.9 Maximum steam output

Maximum steam output is the maximum quantity of steam than can be produced continuously by the boiler or steam generator operating under the design steam conditions.

Table 1 : Minimum design temperature

Type of vessel	Minimum design temperature
Pressure parts of pressure vessels and boilers not heated by hot gases or adequately protected by insulation	Maximum temperature of the internal fluid
Pressure vessel heated by hot gases	25°C in excess of the temperature of the internal fluid
Water tubes of boilers mainly subjected to convection heat	25°C in excess of the temperature of the saturated steam
Water tubes of boilers mainly subjected to radiant heat	50°C in excess of the temperature of the saturated steam
Superheater tubes of boilers mainly subjected to convection heat	35°C in excess of the temperature of the saturated steam
Superheater tubes of boilers mainly subjected to radiant heat	50°C in excess of the temperature of the saturated steam
Economiser tubes	35°C in excess of the temperature of the internal fluid
For combustion chambers of the type used in wet-back boilers	50°C in excess of the temperature of the internal fluid
For furnaces, fire-boxes, rear tube plates of dry-back boilers and other pressure parts subjected to similar rate of heat transfer	90°C in excess of the temperature of the internal fluid

1.3.10 Toxic and corrosive substances

Toxic and corrosive substances are those which are listed in the IMO “International Maritime Dangerous Goods Code (IMDG Code)”, as amended.

1.3.11 Liquid and gaseous substances

a) liquid substances are liquids having a vapour pressure at the maximum allowable temperature of not more than 0,5 bar above normal atmospheric pressure

b) gaseous substances are gases, liquefied gases, gases dissolved under pressure, vapours and also those liquids whose vapour pressure at the maximum allowable temperature is greater than 0,5 bar above normal atmospheric pressure.

1.3.12 Ductile material

For the purpose of this Section, ductile material is a material having an elongation over 12%.

1.3.13 Incinerator

Incinerator is a shipboard facility for incinerating solid garbage approximating in composition to household garbage and liquid garbage deriving from the operation of the ship (e.g. domestic garbage, cargo-associated garbage, maintenance garbage, operational garbage, cargo residue, and fishing gear), as well as for burning sludge with a flash point above 60°C.

These facilities may be designed to use the heat energy produced.

Incinerators are not generally pressure vessels, however when their fittings are of the same type than those of boilers the requirements for these fittings apply.

1.3.14 Gas combustion unit (GCU)

A gas combustion unit (GCU) is an equipment fitted on gas carriers or gas-fuelled ships, allowing the disposal of the excess vapour from LNG tanks by thermal oxidation.

Gas combustion units are not generally pressure vessels; however when their fittings are of the same type than those of boilers the requirements for these fittings apply.

1.4 Classes

1.4.1 Significant parameters

Pressure vessels are classed in three class in consideration of:

- the type of equipment: pressure vessel or steam generator
- the state (gaseous or liquid) of the intended fluid contents
- the substances listed or not in the IMDG Code
- the design pressure p, in MPa
- the design temperature T, in °C
- the actual thickness of the vessel t_A, in mm
- the volume V, in litres.

1.4.2 Pressure vessel classification

Pressure vessels are classed as indicated in Tab 2.

Table 2 : Pressure vessel classification

Equipment	Class 1	Class 2	Class 3
Steam generators or boilers	p > 3,2 and V > 2 or p V > 20 and V > 2	if not class 1 or class 3	p V ≤ 5 or V ≤ 2
Pressure vessels for toxic substances	all	–	–
Pressure vessels for corrosive substances	p > 20 or p V > 20 or T > 350	if not in class 1	–
Pressure vessels for gaseous substances	p > 100 or p V > 300	V > 1 and p V > 100 and not in class 1	all pressure vessels which are not class 1 or class 2
Pressure vessels for liquid substances	V > 10 and p V > 1000 and p > 50	V ≤ 10 and p > 100 or 1 < p ≤ 50 and p V > 1000	all pressure vessels and heat exchangers which are not class 1 or class 2
Pressure vessels for thermal oil	p > 1,6 or T > 300	if not class 1 or class 3	p ≤ 0,7 and T ≤ 150
Pressure vessels for fuel oil, lubricating oil or flammble hydraulic oil	p > 1,6 or T > 150	if not class 1 or class 3	p ≤ 0,7 and T ≤ 60
Whatever type of equipment	$t_A > 40$	$15 < t_A \leq 40$	–
Note 1: Whenever the class is defined by more than one characteristic, the equipment is to be considered belonging to the highest class of its characteristics, independently of the values of the other characteristics.			

1.4.3 Implication of class

The class of a pressure vessel has, among others, implication in:

- design
- material allowance
- welding design
- efficiency of joints
- examination and non-destructive tests
- thermal stress relieving.

See Tab 26.

1.5 Applicable Rules

1.5.1 Alternative standards

a) Boilers and pressure vessels are to be designed, constructed, installed and tested in accordance with the applicable requirements of this Section.

b) The acceptance of national and international standards as an alternative to the requirements of this Section may be considered by the Society on a case by case basis.

1.6 Documentation to be submitted

1.6.1 General

Documents mentioned in the present sub-article are to be submitted for class 1 and class 2 and not for class 3, unless the equipment is considered as critical.

1.6.2 Boilers and steam generators

The plans listed in Tab 3 are to be submitted.

The drawings listed in Tab 3 are to contain:

- the constructional details of all pressure parts, such as shells, headers, tubes, tube plates, nozzles
- strengthening members, such as stays, brackets, opening reinforcements and covers
- installation arrangements, such as saddles and anchoring system

as well as the information and data indicated in Tab 4.

1.6.3 Pressure vessels

The plans listed in Tab 5 are to be submitted.

The drawings listed in Tab 5 are to contain the constructional details of:

- pressure parts, such as shells, headers, tubes, tube plates, nozzles, opening reinforcements and covers
- strengthening members, such as stays, brackets and reinforcements.

Table 3 : Drawings to be submittedfor boilers and steam generators

No.	A/I	Item
1	I	General arrangement plan, including valves and fittings
2	A	Material specifications
3	A	Sectional assembly
4	A	Evaporating parts
5	A	Superheater
6	A	De-superheater
7	A	Economiser
8	A	Air heater
9	A	Tubes and tube plates
10	A	Nozzles and fittings
11	A	Safety valves and their arrangement
12	A	Boiler seating
13	I	Fuel oil burning arrangement
14	I	Forced draught system
15	I	Refractor or insulation arrangement
16	A	Boiler instrumentation, monitoring and control system
17	A	Type of safety valves and their lift, discharge rate and setting
18	A	Welding details, including at least: • typical weld joint design • welding procedure specifications • post-weld heat treatment
Note 1: A = to be submitted for approval ; I = to be submitted for information		

Table 4 : Information and data to be submittedfor boilers and steam generators

No.	Item
1	Design pressure and temperature
2	Pressure and temperature of the superheated steam
3	Pressure and temperature of the saturated steam
4	Maximum steam production per hour
5	Evaporating surface of the tube bundles and water-walls
6	Heating surface of the economiser, superheater and air-heater
7	Surface of the furnace
8	Volume of the combustion chamber
9	Temperature and pressure of the feed water
10	Type of fuel to be used and fuel consumption at full steam production
11	Number and capacity of burners

Table 5 : Drawings, information and data to be submitted for pressure vessels and heat exchangers

No.	A/I	Item
1	I	General arrangement plan, including nozzles and fittings
2	A	Sectional assembly
3	A	Safety valves (if any) and their arrangement
4	A	Material specifications
5	A	Welding details, including at least: • typical weld joint design • welding procedure specifications • post-weld heat treatments
6	I	Design data, including at least design pressure and design temperatures (as applicable)
7	A	For seamless (extruded) pressure vessels, the manufacturing process, including: • a description of the manufacturing process with indication of the production controls normally carried out in the manufacturer's works • details of the materials to be used (specification, yield point, tensile strength, impact strength, heat treatment) • details of the stamped marking to be applied
8	I	Type of fluid or fluids contained
Note 1: A = to be submitted for approval ; I = to be submitted for information		

1.6.4 Incinerators

Incinerators are to be considered on a case by case basis, based on their actual arrangement, using the applicable requirements for boilers and pressure vessels.

1.6.5 Gas combustion units

Gas combustion units are to be considered on a case by case basis, based on their actual arrangement, using the applicable requirements for boilers and pressure vessels.

The documents listed in Tab 6 are to be submitted.

Table 6 : Documentation to be submitted for gas combustion units

No.	I/A **(1)**	Document **(2)**
1	A	General arrangement plan
2	I	For each intended operating case: • description, including firing and shut-off sequences, purging sequence, etc. • minimum and maximum allowed gas flow rate • maximum flue gas temperature
3	I	Material specification
4	A	Details of refractor or insulation arrangement, as applicable
5	A	Details of combustion air and dilution air systems
6	A	Diagram of the gas supply system with details of the piping (pipe material, thickness, type of the connections)
7	A	Details of electrical equipment (including safety characteristics)
8	A	Details of control, monitoring and safety systems
9	I	Procedure for workshop and shipboard tests

(1) A = to be submitted for approval
I = to be submitted for information
(2) Diagrams are also to include, where applicable, the local and remote control systems, monitoring systems and automation systems

2 Design and construction - Scantlings of pressure parts

2.1 General

2.1.1 Application

a) In general, the formulae in the present Article do not take into account additional stresses imposed by effects other than pressure, such as stresses deriving from the static and dynamic weight of the pressure vessel and its content, external loads from connecting equipment and foundations, etc. For the purpose of the Rules these additional loads may be neglected, provided it can reasonably be presumed that the actual average stresses of the vessel, considering all these additional loads, would not increase more than 10% with respect to the stresses calculated by the formulae in this Article.

b) Where it is necessary to take into account additional stresses, such as dynamic loads, the Society reserves the right to ask for additional requirements on a case by case basis.

2.1.2 Alternative requirements

When pressure parts are of an irregular shape, such as to make it impossible to check the scantlings by applying the formulae of this Article, the approval is to be based on other means, such as burst and/or deformation tests on a prototype or by another method agreed upon between the manufacturer and the Society.

2.2 Materials

2.2.1 Materials for high temperatures

a) Materials for pressure parts having a design temperature exceeding the ambient temperature are to be selected by the Manufacturer and to have mechanical and metallurgical properties adequate for the design temperature. Their allowable stress limits are to be determined as a function of the temperature, as per [2.3.2].

b) When the design temperature of pressure parts exceeds 400°C, alloy steels are to be used. Other materials are subject of special consideration by the Society.

2.2.2 Materials for low temperatures

Materials for pressure parts having a design temperature below the ambient temperature are to have notch toughness properties suitable for the design temperature.

2.2.3 Cast iron

Grey cast iron is not to be used for:

a) class 1 and class 2 pressure vessels

b) class 3 pressure vessels with design pressure p > 1.6 MPa or product p·V > 1000, where V is the internal volume of the pressure vessel in litres

c) Bolted covers and closures of pressure vessels having a design pressure p > 1 MPa, except for covers intended for boiler shells, for which [3.2.4], item e) applies.

Spheroidal cast iron may be used subect to the agreement of the Society following special consideration. However, it is not to be used for parts, having a design temperature exceeding 350°C.

2.2.4 Valves and fittings for boilers

a) Ductile materials are to be used for valves and fittings intended to be mounted on boilers. The material is to have mechanical and metallurgical characteristics suitable for the design temperature and for the thermal and other loads imposed during the operation.

b) Grey cast iron is not to be used for valves and fittings which are subject to dynamic loads, such as safety valves and blow-down valves, and in general for fittings and accessories having design pressure p exceeding 0,3 MPa and design temperature T exceeding 220°C.

c) Spheroidal cast iron is not to be used for parts having a design temperature T exceeding 350°C.

d) Bronze is not to be used for parts having design temperature T exceeding 220°C for normal bronzes and 260°C for bronzes suitable for high temperatures. Copper and aluminium brass are not to be used for fittings with design temperature T above 200°C and copper-nickel fittings with design temperature T exceeding 300°C.

2.2.5 Alternative materials

In the case of boilers or pressure vessels constructed in accordance with one of the standards considered acceptable by the Society as per [1.5], the material specifications are to be in compliance with the requirements of the standard used.

2.3 Permissible stresses

2.3.1 The permissible stresses K, in N/mm², for steels, to be used in the formulae of this Article, may be determined from Tab 7, Tab 8, Tab 9 and Tab 10, where R_m is the ultimate strength of the material, in N/mm². For intermediate values of the temperature, the value of K is to be obtained by linear interpolation.

Table 7 : Permissible stresses K for carbon steels intended for boilers and thermal oil heaters

Carbon steel	T (°C)	≤ 50	100	150	200	250	300	350	400
R_m = 360 N/mm² Grade HA	t ≤ 15 mm	133	109	107	105	94	77	73	72
	15 mm < t ≤ 40 mm	128	106	105	101	90	77	73	72
	40 mm < t ≤ 60 mm	122	101	99	95	88	77	73	72
R_m = 360 N/mm² Grades HB, HD	t ≤ 15 mm	133	127	116	103	79	79	72	69
	15 mm < t ≤ 40 mm	133	122	114	102	79	79	72	69
	40 mm < t ≤ 60 mm	133	112	107	99	79	79	72	69
R_m = 410 N/mm² Grade HA	t ≤ 15 mm	152	132	130	126	112	94	89	86
	15 mm < t ≤ 40 mm	147	131	124	119	107	94	89	86
	40 mm < t ≤ 60 mm	141	120	117	113	105	94	89	86
R_m = 410 N/mm² Grades HB, HD	t ≤ 15 mm	152	147	135	121	107	95	88	84
	15 mm < t ≤ 40 mm	152	142	133	120	107	95	88	84
	40 mm < t ≤ 60 mm	152	134	127	117	107	95	88	84
R_m = 460 N/mm² Grades HB, HD	t ≤ 15 mm	170	164	154	139	124	111	104	99
	15 mm < t ≤ 40 mm	169	162	151	137	124	111	104	99
	40 mm < t ≤ 60 mm	162	157	147	136	124	111	104	99
R_m = 510 N/mm² Grades HB, HD	t ≤ 60 mm	170	170	169	159	147	134	125	112

Table 8 : Permissible stresses K for carbon steels intended for other pressure vessels

Carbon steel	T (°C)	≤ 50	100	150	200	250	300	350	400
R_m = 360 N/mm² Grade HA	t ≤ 15 mm	133	117	115	112	100	83	78	77
	15 mm < t ≤ 40 mm	133	114	113	108	96	83	78	77
	40 mm < t ≤ 60 mm	130	108	105	101	94	83	78	77
R_m = 360 N/mm² Grades HB, HD	t ≤ 15 mm	133	133	123	110	97	85	77	73
	15 mm < t ≤ 40 mm	133	131	122	109	97	85	77	73
	40 mm < t ≤ 60 mm	133	119	115	106	97	85	77	73
R_m = 410 N/mm² Grade HA	t ≤ 15 mm	152	141	139	134	120	100	95	92
	15 mm < t ≤40 mm	152	134	132	127	114	100	95	92
	40 mm < t ≤ 60 mm	150	128	121	112	112	100	95	92
R_m = 410 N/mm² Grades HB, HD	t ≤ 15 mm	152	152	144	129	114	101	94	89
	15 mm < t ≤ 40 mm	152	152	142	128	114	101	94	89
	40 mm < t ≤ 60 mm	152	143	139	125	114	101	94	89
R_m = 460 N/mm² Grades HB, HD	t ≤ 15 mm	170	170	165	149	132	118	111	105
	15 mm < t ≤ 40 mm	170	170	161	147	132	118	111	105
	40 mm < t ≤ 60 mm	170	167	157	145	132	118	111	105
R_m = 510 N/mm² Grades HB, HD	t ≤ 60 mm	189	189	180	170	157	143	133	120

Table 9 : Permissible stresses K for alloy steels intended for boilers and thermal oil heaters

Alloy steel	T(°C)	≤ 50	100	150	200	250	300	350	400	450	475	500	525	550	575	600
0,3Mo	t ≤ 60 mm	159	153	143	134	125	106	100	94	91	89	87	36			
1Cr 0,5Mo	t ≤ 60 mm	167	167	157	144	137	128	119	112	106	104	103	55	31	19	
2,25Cr 1Mo **(1)**	t ≤ 60 mm	170	167	157	147	144	137	131	125	119	115	112	61	41	30	22
2,25Cr 1Mo **(2)**	t ≤ 60 mm	170	167	164	161	159	147	141	130	128	125	122	61	41	30	22

(1) Normalised and tempered
(2) Normalised and tempered or quenched and tempered

Table 10 : Permissible stresses K for alloy steels intended for other pressure vessels

Alloy steel	T(°C)	≤ 50	100	150	200	250	300	350	400	450	475	500	525	550	575	600
0,3Mo	t ≤ 60 mm	159	159	153	143	133	113	107	100	97	95	93	38			
1Cr 0,5Mo	t ≤ 60 mm	167	167	167	154	146	137	127	119	113	111	110	59	33	20	
2,25Cr 1Mo **(1)**	t ≤ 60 mm	183	174	167	157	154	146	140	133	127	123	119	65	44	32	23
2,25Cr 1Mo **(2)**	t ≤ 60 mm	174	174	174	172	170	157	150	139	137	133	130	65	44	32	23

(1) Normalised and tempered
(2) Normalised and tempered or quenched and tempered

2.3.2 Direct determination of permissible stress

The permissible stresses K, where not otherwise specified, may be taken as indicated below.

a) Steel:

The permissible stress is to be the minimum of the values obtained by the following formulae:

$$K = \frac{R_{m,20}}{2,7}$$

$$K = \frac{R_{S,MIN,T}}{A}$$

$$K = \frac{S_A}{A}$$

where:

$R_{m,20}$: Minimum tensile strength at ambient temperature (20°C), in N/mm²

$R_{S,MIN,T}$: Minimum between R_{eH} and $R_{p\,0,2}$ at the design temperature T, in N/mm²

S_A : Average stress to produce creep rupture in 100000 hours, in N/mm², at the design temperature T

A : Safety factor taken as follows, when reliability of $R_{S,MIN,T}$ and S_A values are proved to the Society's satisfaction:

- 1,6 for boilers and other steam generators
- 1,5 for other pressure vessels
- specially considered by the Society if average stress to produce creep rupture in more than 100000 hours is used instead of S_A

In the case of steel castings, the permissible stress K, calculated as above, is to be decreased by 20%. Where steel castings are subjected to non-destructive tests, a smaller reduction up to 10% may be taken into consideration by the Society.

b) Spheroidal cast iron:

The permissible stress is be to the minimum of the values obtained by the following formulae:

$$K = \frac{R_{m,20}}{4,8}$$

$$K = \frac{R_{S,MIN,T}}{3}$$

c) Grey cast iron:

The permissible stress is obtained by the following formula:

$$K = \frac{R_{m,20}}{10}$$

d) Copper alloys:

The permissible stress is obtained by the following formula:

$$K = \frac{R_{m,T}}{4}$$

where:

$R_{m,T}$: Minimum tensile strength at the design temperature T, in N/mm²

e) Aluminium and aluminium alloys:

The permissible stress is to be the minimum of the values obtained by the following formulae:

$$K = \frac{R_{m,T}}{4}$$

$$K = \frac{R_{e,H}}{1,5}$$

where:

$R_{e,H}$: Minimum yield stress, in N/mm²

f) Additional conditions:

- in special cases, the Society reserves the right to apply values of permissible stress K lower than those specified above, in particular for lifting appliance devices and steering gear devices
- in the case of boilers or other steam generators, the permissible stress K is not to exceed 170 N/mm²
- for materials other than those listed above the permissible stress is to be agreed with the Society on a case by case basis.

2.4 Cylindrical, spherical and conical shells with circular cross-sections subject to internal pressure

2.4.1 Cylindrical shell thickness

a) The minimum thickness of cylindrical, spherical and conical shells with circular cross-sections is not to be less than the value t, in mm, calculated by one of the following formulae, as appropriate. Cylindrical tube plates pierced by a great number of tube holes are to have thickness calculated by the applicable formulae in [2.4.3], [2.4.4], [2.4.5] and [2.9.2].

b) The thicknesses obtained by the formulae in [2.4.3], [2.4.4] and [2.4.5] are "net" thicknesses, as they do not include any corrosion allowance. The thickness obtained by the above formulae is to be increased by 0,75 mm. See also [2.4.7].

2.4.2 Efficiency

a) The values of efficiency e to be used in the formulae in [2.4.3], [2.4.4] and [2.4.5] are indicated in Tab 11.

b) The manufacturer may propose a factor e lower than those indicated in Tab 11 where consistent with the factor used in the formulae of [2.4.3], [2.4.4] and [2.4.5] and with the provisions of specific requirements according to class as per [4.9], [4.10] or [4.11]. The proposed efficiency factor is to be agreed by the Society.

Table 11 : Efficiency of unpierced shells

Case	e
Seamless shells	1,00
Shells of class 1 vessels **(1)**	1,00
Shells of class 2 vessels (with partial radiographic examination of butt-joints)	0,85
Shells of class 2 vessels with actual thickness ≤ 15 mm (without radiographic examination of butt-joints)	0,75
(1) In special cases the Society reserves the right to take a factor e < 1, depending on the welding procedure adopted for the welded joint.	

2.4.3 Cylindrical shells

a) When the ratio external diameter/inside diameter is equal to or less than 1,5, the minimum thickness of cylindrical shells is given by the following formula:

$$t = \frac{pD}{(2K - p)e}$$

where:

p : Design pressure, in MPa

D : Inside diameter of vessel, in mm

K : Permissible stress, in N/mm², obtained as specified in [2.3]

e : Efficiency of welded joint, the value of which is given in [2.4.2].

b) The minimum thickness of shells having ratio external diameter/inside diameter exceeding 1,5 is subject of special consideration.

2.4.4 Spherical shells

a) When the ratio external diameter/inside diameter is equal to or less than 1,5, the minimum thickness of spherical shells is given by the following formula:

$$t = \frac{pD}{(4K - p)e}$$

For the meaning of the symbols, see [2.4.3].

b) The minimum thickness of shells having ratio external diameter/inside diameter exceeding 1,5 is subject of special consideration.

2.4.5 Conical shells

a) The following formula applies to conical shells of thickness not exceeding 1/6 of the external diameter in way of the large end of the cone:

$$t = \frac{pD}{(2K - p)e \cdot \cos\varphi}$$

For the meaning of the symbols, see [2.4.3].

D is measured in way of the large end of the cone and φ is the angle of slope of the conical section of the shell to the pressure vessel axis (see Fig 1). When φ exceeds 75°, the shell thickness is to be taken as required for flat heads, see [2.7].

b) The minimum thickness of shells having thickness exceeding 1/6 of the external diameter in way of the large end of the cone is subject of special consideration.

c) Conical shells may be made of several ring sections of decreasing thickness. The minimum thickness of each section is to be obtained by the formula in a) using for D the maximum diameter of the considered section.

d) In general, the junction with a sharp angle between the conical shell and the cylindrical or other conical shell, having different angle of slope, is not allowed if the angle of the generating line of the shells to be assembled exceeds 30°.

e) The shell thickness in way of knuckles is subject of special consideration by the Society.

Figure 1 : Conic shells

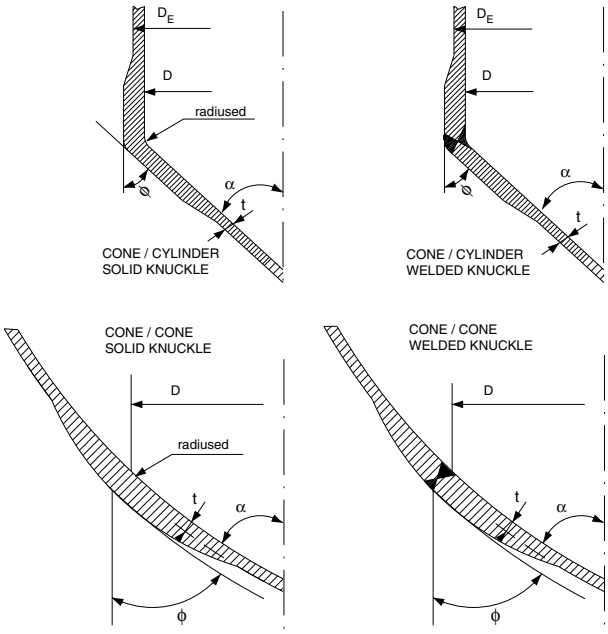

2.4.6 Minimum thickness of shells

Irrespective of the value calculated by the formulae in [2.4.3], [2.4.4] or [2.4.5], the thickness t of shells is not to be less than one of the following values, as applicable:

- for pressure vessels: t = 3 + D/1500 mm
- for unpierced plates of boilers: t = 6,0 mm
- for boiler cylindrical tube plates: t = 9,5 mm.

No corrosion allowance needs to be added to the above values.

2.4.7 Corrosion allowance

The Society reserves the right to increase the corrosion allowance value in the case of vessels exposed to particular accelerating corrosion conditions. The Society may also consider the reduction of this factor where particular measures are taken to effectively reduce the corrosion rate of the vessel.

2.5 Dished heads subject to pressure on the concave (internal) side

2.5.1 Dished head for boiler headers

Dished heads for boiler headers are to be seamless.

2.5.2 Dished head profile

The following requirements are to be complied with for the determination of the profile of dished heads (see Fig 2 (a) and (b)).

a) Ellipsoidal heads:

$H \geq 0,2\ D$

where:

H : External depth of head, in mm, measured from the start of curvature at the base.

b) Torispherical heads:

$R_{IN} \leq D$

$r_{IN} \geq 0,1\ D$

$r_{IN} \geq 3\ t$

$H \geq 0,18\ D$

where:

R_{IN} : Internal radius of the spherical part, in mm

r_{IN} : Internal knuckle radius, in mm

H : External depth of head calculated by the following formula (see Fig 2 (b)):

$H = R_E - [(R_E - 0,5\ D) \cdot (R_E + 0,5\ D - 2\ r_E)]^{0,5}$

where:

R_E : External radius of the spherical part, in mm

r_E : External knuckle radius, in mm.

Figure 2 : Dished head profiles

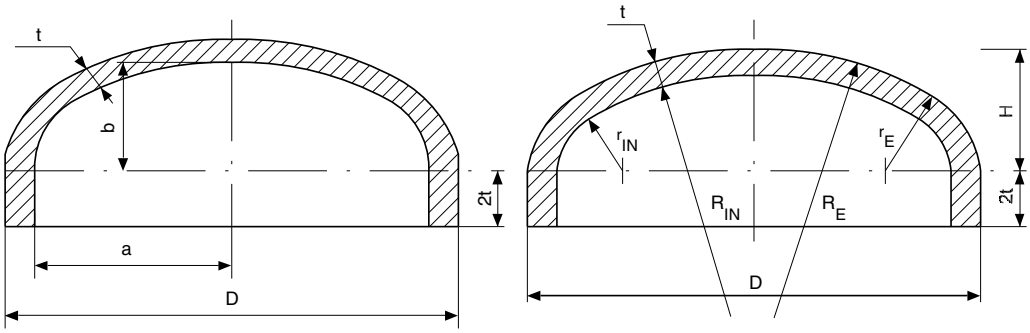

(a) ELLIPSOIDAL HEAD (b) TORISPHERICAL HEAD

2.5.3 Required thickness of solid dished heads

a) The minimum thickness of solid (not pierced) hemispherical, torispherical, or ellipsoidal unstayed dished heads, subject to pressure on the concave (internal) side, is to be not less than the value t, in mm, calculated by the following formula:

$$t = \frac{pDC}{2Ke}$$

where:

C : Shape factor, obtained from the graph in Fig 3, as a function of H/D and t/D.

For other symbols, see [2.4.3].

b) The thickness obtained by the formula in item a) is "net" thickness, as it does not include any corrosion allowance. The thickness obtained by the above formula is to be increased by 0,75 mm. See also [2.4.7].

Figure 3 : Shape factor for dished heads

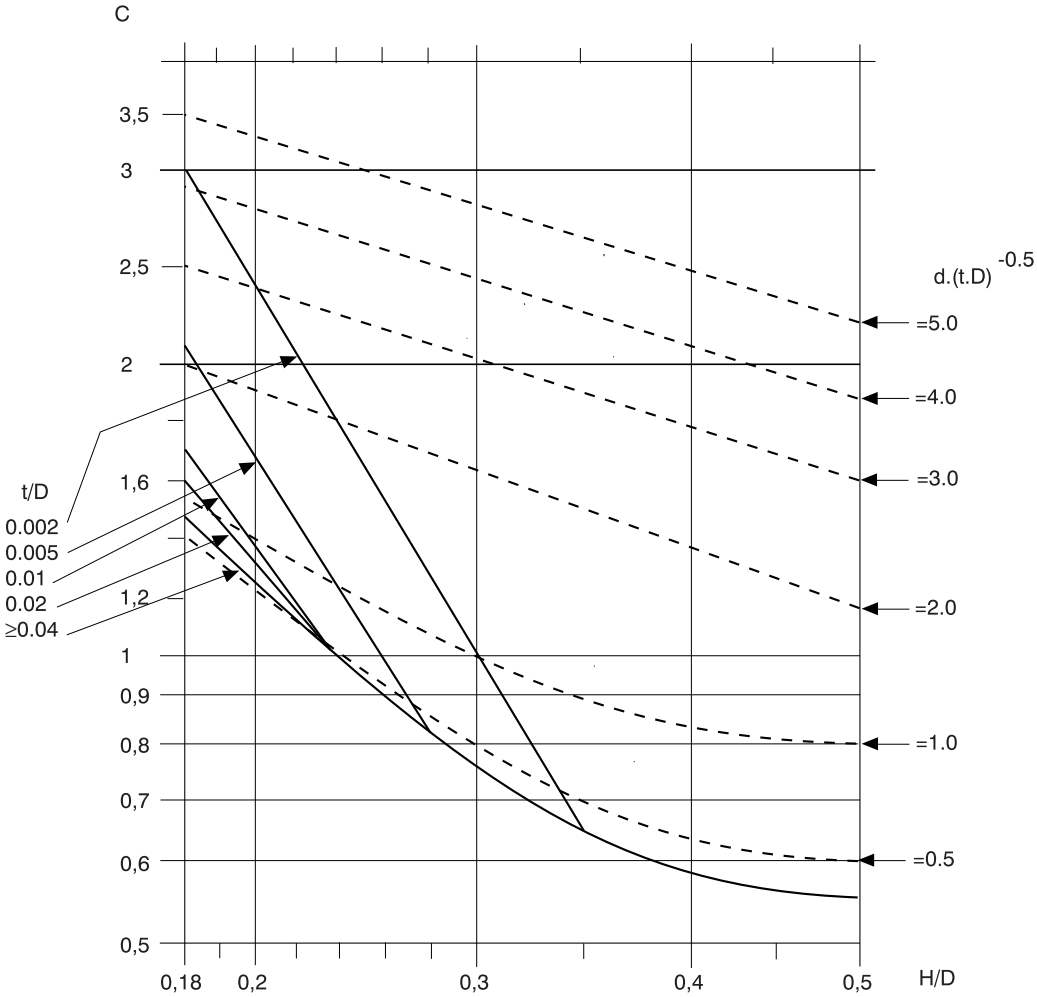

2.5.4 Composed torispherical heads

a) Torispherical heads may be constructed with welded elements of different thicknesses (see Fig 4).

b) Where a torispherical head is built in two sections, the thickness of the torispherical part is to be obtained by the formula in [2.5.3], while the thickness of the spherical part may be obtained by the formula in [2.4.4].

c) The spherical part may commence at a distance from the knuckle not less than:

$0,5 \cdot (R_{IN} \cdot t)^{0,5}$

where:

R_{IN} : Internal radius of the spherical part, in mm

t : Knuckle thickness, in mm.

Figure 4 : Composed torispherical head

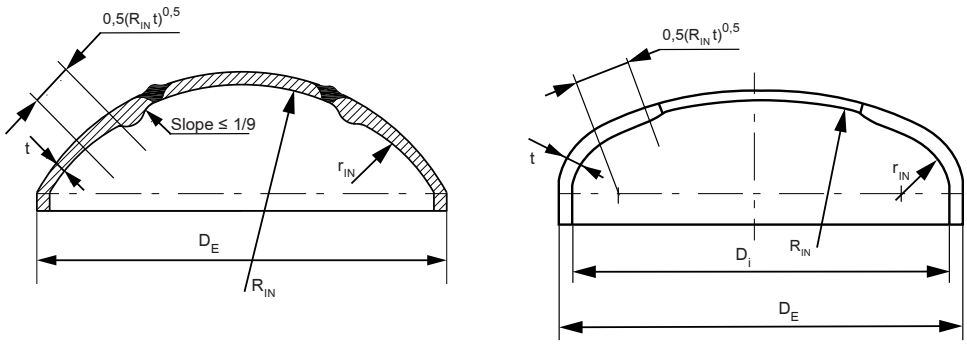

2.5.5 Minimum thickness of dished heads

Irrespective of the values calculated in [2.5.2] and [2.5.3], the thickness t of dished heads is not to be less than:

- $3 + D_E / 1500$ mm for normal pressure vessels
- 6 mm for boiler pressure vessels.

No corrosion allowance needs to be added to the above values.

2.5.6 Connection of heads to cylindrical shells

The heads are to be provided, at their base, with a cylindrical skirt not less than 2t in length and with a thickness in no case less than the Rule thickness of a cylindrical shell of the same diameter and the same material, calculated by the formula given in [2.4.3] using the same efficiency factor e adopted for calculation of the head thickness. Fig 5 and Fig 6 show typical admissible attachments of dished ends to cylindrical shells.

In particular, hemispherical heads not provided with the above skirt are to be connected to the cylindrical shell if the latter is thicker than the head, as shown in Fig 5.

Other types of connections are subject to special consideration by the Society.

Figure 5 : Typical attachment of dished heads to cylindrical shells

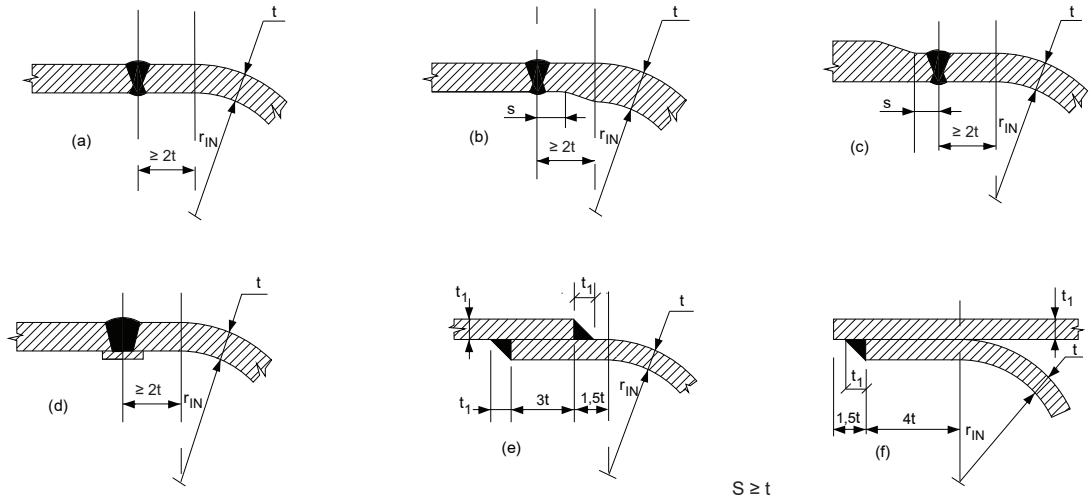

Types shown in (a), (b) and (c) are acceptable for all pressure vessels.

Type shown in (d) is acceptable for class 2 and class 3 pressure vessels.

Types shown in (e) and (f) are acceptable for class 3 pressure vessels only.

Figure 6 : Connection of hemispherical head to the cylindrical shell

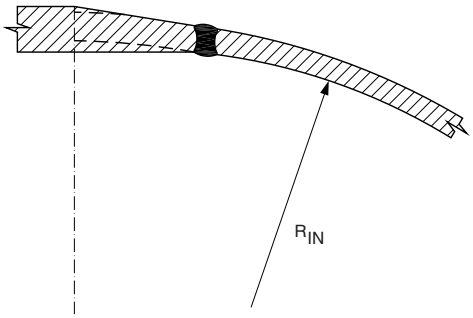

2.6 Dished heads subject to pressure on the convex (external) side

2.6.1 The calculation of the minimum thickness is to be performed according to a standard accepted by the Society.

In addition, the thickness of torispherical or ellipsoidal heads under external pressure is no to be less than 1,2 times the thickness required for a head of the same shape subject to internal pressure.

2.7 Flat heads

2.7.1 Unstayed flat head minimum thickness

a) The minimum thickness of unstayed flat heads is not to be less than the value t, in mm, calculated by the following formula:

$$t = D\left(\frac{100p}{CK}\right)^{0,5}$$

where:

p : Design pressure, in MPa

K : Permissible stress, in N/mm², obtained as specified in [2.3]

D : Diameter of the head, in mm. For circular section heads, the diameter D is to be measured as shown in Fig 7 and Fig 8 for various types of heads. For rectangular section heads, the equivalent value for D may be obtained from the following formula:

$$D = a\left[3,4 - 2,4\left(\frac{a}{b}\right)\right]^{0,5}$$

a and b being the smaller and larger side of the rectangle, respectively, in mm

C : The values given below, depending on the various types of heads shown in Fig 7 and Fig 8:

Fig 7(a) : C = 400 for circular heads

Fig 7(b) : C = 330 for circular heads

Fig 7(c) : C = 350 for circular heads

Fig 7(d) : C = 400 for circular heads and C = 250 for rectangular heads

Fig 7(e) : C = 350 for circular heads and C = 200 for rectangular heads

Fig 7(f) : C = 350 for circular heads

Fig 7(g) : C = 300 for circular heads

Fig 7(h) : C = 350 for circular heads and C = 200 for rectangular heads

Fig 8(i) : C = 350 for circular heads and C = 200 for rectangular heads

Fig 8(j) : C = 200 for circular heads

Fig 8(k) : C = 330 for circular heads

Fig 8(l) : C = 300 for circular heads

Fig 8(m) : C = 300 for circular heads

Fig 8(n) : C = 400 for circular heads

Fig 8(o) : C = value obtained from the following formula, for circular heads:

$$C = \frac{100}{0,3 + \frac{1,9Fh}{pD^3}}$$

where:

h : Radial distance, in mm, from the pitch centre diameter of bolts to the circumference of diameter D, as shown in Fig 8(o)

F : Total bolt load, in N, to be taken as the greater of the following values F_1 and F_2:

$F_1 = 0{,}785\ D\ p\ (D + m\ b)$

$F_2 = 9{,}81\ y\ D\ b$

with:

b : Effective half contact width of the gasket, in mm, calculated as follows:

$b = 0{,}5\ N$ for $N \leq 13$ mm, and

$b = 1{,}8\ N^{0,5}$ for $N > 13$ mm

where N is the geometric contact width of the gasket, in mm, as indicated in Fig 8(o)

m, y : Adimensional coefficients, whose values are given in Tab 12, depending on the type of gasket.

The adoption of one of the above-mentioned heads is subject to the Society's approval depending upon its use. Types of heads not shown in Fig 7 and Fig 8 are to be the subject of special consideration by the Society.

b) The thickness obtained by the formulae in a) is "net" thickness, as it does not include any corrosion allowance. The thickness obtained by the above formula is to be increased by 1 mm. See also [2.4.7].

2.7.2 Stayed flat head minimum thickness

For the minimum thickness of stayed flat heads, see [2.12.3].

Figure 7 : Types of unstayed flat heads (1)

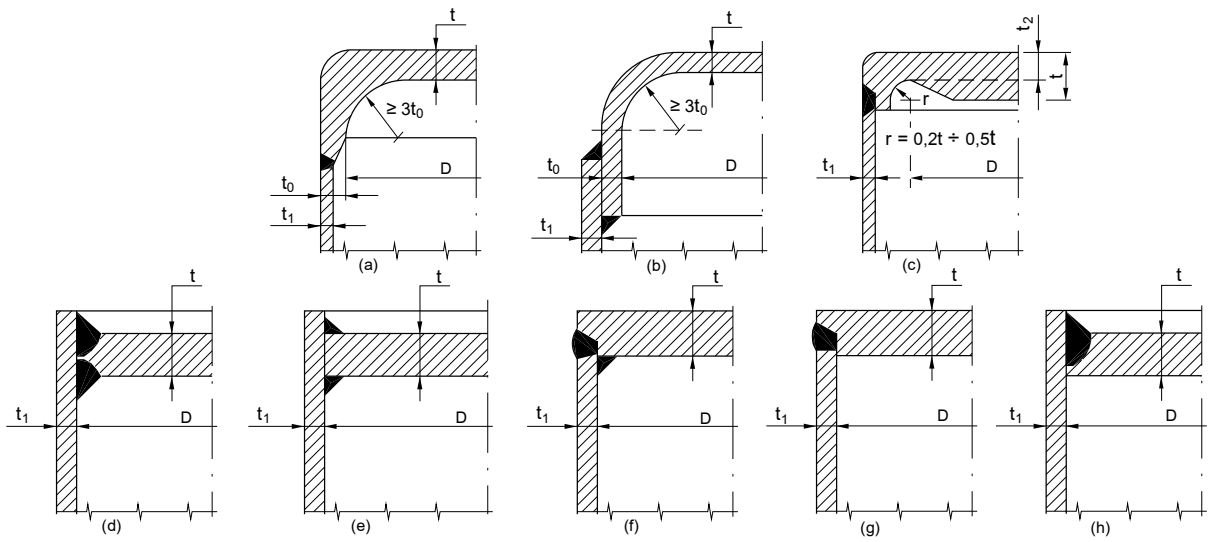

Figure 8 : Types of unstayed flat heads (2)

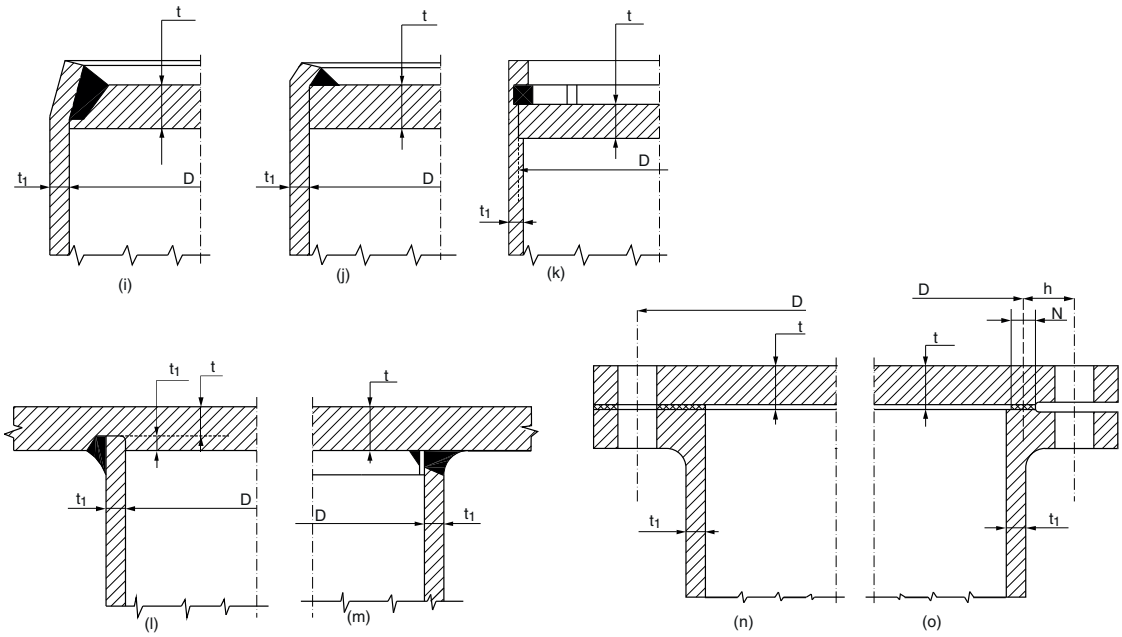

Table 12 : Coefficients m and y

Type of gasket	m	y
Self-sealing, metal or rubber (e.g. O-ring)	0	0
Rubber with cotton fabric	10	0,88
Rubber with reinforcing fabric with or without metal wire:		
- 3 layers	18	4,85
- 2 layers	20	6,4
- 1 layers	22	8,2
Synthetic fibre with suitable binders:		
- 3,0 mm thick	16	3,5
- 1,5 mm thick	22	8,2
Organic fibre	14	2,4
Metal spiral lined with synthetic fibre:		
- carbon steel	20	6,4
- stainless steel	24	9,9
Synthetic fibre with plain metal lining:		
- copper	28	14,0
- iron	30	16,8
- stainless steel	30	20,0
Solid metal:		
- copper	38	28,7
- iron	44	39,8
- stainless steel	52	57,5

2.8 Openings and branches (nozzles)

2.8.1 Nozzles thickness

a) The thickness e_b, in mm, of nozzles attached to shells and headers of boilers is not to be less than:

$$e_b = \frac{d_E}{25} + 2,5$$

where d_E is the outside diameter of nozzle, in mm.

The thickness of the nozzle is, however, to be not less than the thickness required for the piping system attached to the vessel shell calculated at the vessel design pressure, and need not to be greater than the thickness of the shell to which it is connected.

b) The thickness of the nozzle attached to shells and headers of other pressure vessels is not to be less than the thickness required for the piping system attached to the vessel shell calculated at the vessel design pressure, and need not be greater than the thickness of the shell to which it is connected.

c) Where a branch is connected by screwing, the thickness of the nozzle is to be measured at the root of the thread.

2.8.2 Nozzle connection to vessel shell

a) In general, the axis of the nozzle is not to form an angle greater than 15° with the normal to the shell.

b) Fig 30, Fig 31, Fig 32 and Fig 33 show some typical acceptable connections of nozzles to shells. Other types of connections are to be considered by the Society on a case by case basis.

2.8.3 Openings in shells

a) In general, the largest dimensions of the openings in shells are not to exceed:

- for shells up to 1500 mm in diameter D_E:

  1/2 D_E, but not more than 500 mm
- for shells over 1500 mm in diameter D_E:

  1/3 D_E, but not more than 1000 mm,

where D_E is the vessel external diameter, in mm.

Greater values may be considered by the Society on a case by case basis.

b) In general, in oval or elliptical openings the ratio major diameter/minor diameter is not to exceed 2.

2.8.4 Openings compensation in cylindrical shells

a) Compensation methods

For cylindrical shells with openings, the efficiency of the main body is to be satisfied by one of the following methods:

- by increasing the wall thickness of main body compared with that of the cylindrical shell without opening: see Fig 9
- by branches which have been provided with a wall thickness of that required on account of the internal pressure: see Fig 10 and Fig 11
- by reinforcing pads or rings analogous to increasing the wall thickness: see Fig 12 and Fig 13
- by a combination of previous reinforcement

b) Definitions

Effective lengths ℓ_{rs} required for calculation of efficiency and of compensations is to be taken as:

$$\ell_{rs} = \min(\sqrt{Dt_a}, \ell_{s1})$$

where:

D : Outside diameter, in mm

t_a : Available thickness, in mm

ℓ_{s1} : Transition length, in mm, according to Fig 9 and Fig 10

Figure 9 : Reinforcement by increasing the wall thickness of the main body with opening

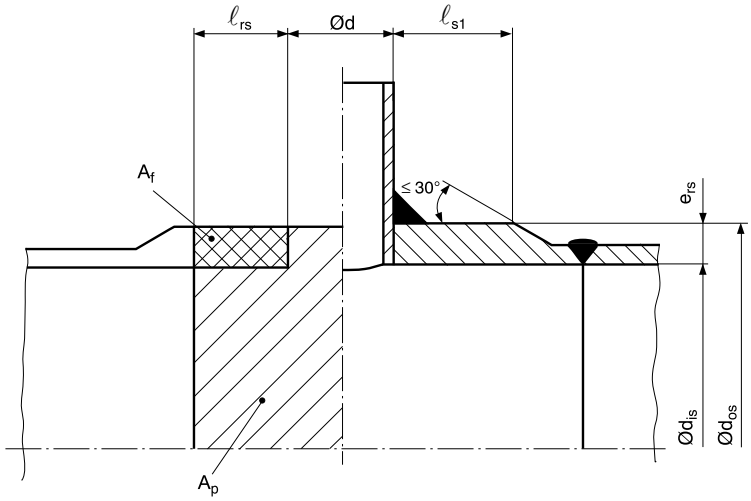

Figure 10 : Reinforcement by set-through and full penetration welded branch

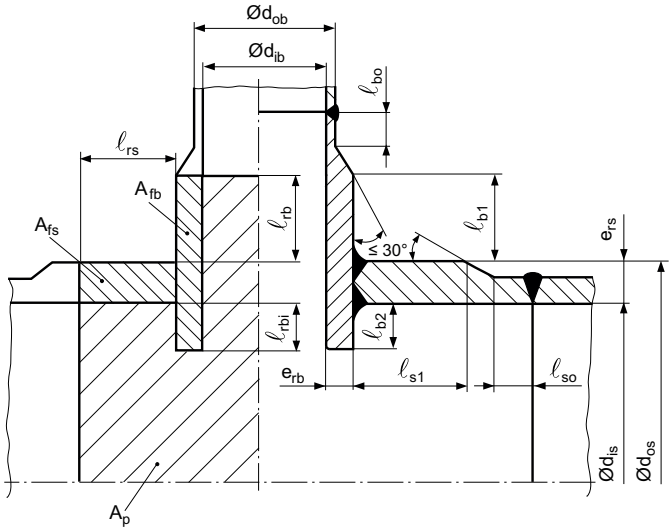

Figure 11 : Reinforcement by welded on branch

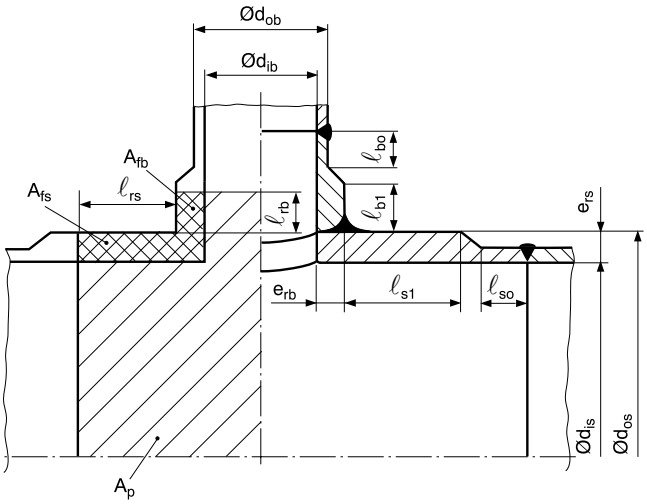

Figure 12 : Opening with reinforcing pad

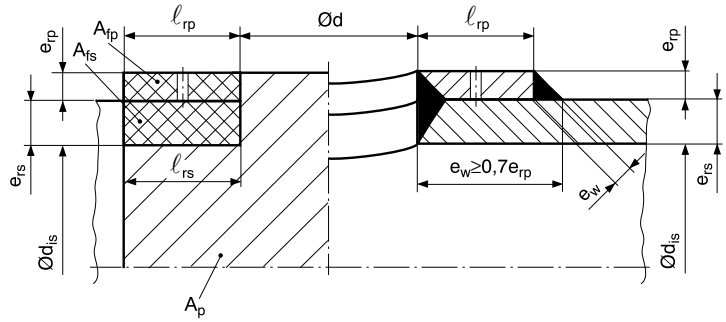

Figure 13 : Opening with reinforcing pad and full penetration branch

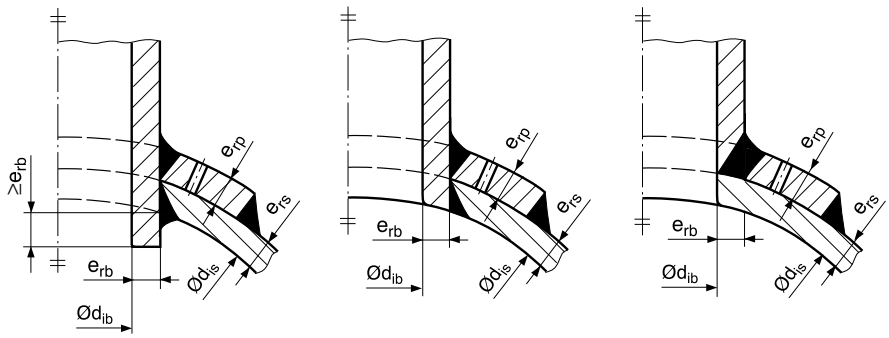

a) set through welded branch b) set in welded branch c) set on welded branch

c) Basic calculation

The required wall thickness without allowance of a cylindrical shell is determined with the following formula (see [2.4.3]):

$$t = \frac{pD}{(2K - p)e}$$

With the available thickness t_a, we obtain the available efficiency e_a and the maximum diameter d_{obmax} of an unreinforced opening when the average stress of the main body is equal to the permissible stress K:

$$e_a = \frac{pD_i}{(2K - p)t_a}$$

$$d_{obmax} = 2\left[\frac{\ell_{rs}}{e_a} - \ell_{rs}\right]$$

where:

D_i : Internal diameter of the main body, in mm

d) Isolated opening reinforcement

The reinforcement of isolated openings as indicated in Fig 9 to Fig 13 are to be in respect with:

- If the design stress of the branch is equal or greater than the shell's design stress:

$$\frac{A_p}{A_f} \leq \frac{K}{p} - 0,5$$

where:

K : Permissible stress in the shell, in N/mm²

A_f : Total area of cross section (wall and branch and pad)

A_p : Total area under pressure p.

- If the design stress of the branch is less than the shell's design stress:

$$\frac{2A_p + A_{fs} + A_{fb}}{2\left(A_{fs} + \frac{K_b}{K}A_{fb}\right)} \leq \frac{K}{p}$$

K : Permissible stress in the shell, in N/mm²

K_b : Permissible stress in the branch, in N/mm²

A_{fs} : Total area of the wall cross section

: Total area of the branch cross section

A_p : Total area under pressure p.

In Fig 9 to Fig 13, ℓ_{rs}, ℓ_{rb} and ℓ_{rbi} are effective lengths for calculation of efficiencies and compensation, equal to:

- for shell:

$$\ell_{rs} = \min(\sqrt{(D + e_{rs})e_{rs}}, \ell_{s1})$$

- for external branch projection:

$$\ell_{rb} = \min(\sqrt{(d_{ib} + e_{rb})e_{rb}}, \ell_{b1})$$

- for internal branch projection:

$$\ell_{rbi} = \min(0,5\sqrt{(d_{ib} + e_{rb})e_{rb}}, \ell_{b2})$$

e) Condition of isolated openings

- Full case

Adjacent openings are to be treated as isolated openings if the centre distance P_ϕ, in accordance with Fig 16, is not less than:

$$\frac{\left(\frac{d_{ib1}}{2} + e_{rb1}\right)}{\cos\Psi_1} + \frac{\left(\frac{d_{ib2}}{2} + e_{rb2}\right)}{\cos\Psi_2} + 2\sqrt{(d_{is} + e_{rs})e_{rs}}$$

For variable definition see Fig 14 and Fig 15.

- Simplification

  - For openings without branch:

    $e_{rb} = 0$ and $\Psi = 0$

  - For openings with nozzles perpendicular to shell:

    The openings are to be treated as isolated openings if the centre distance P_ϕ in accordance with Fig 16 is not less than:

$$\left(\frac{d_{ib1}}{2} + e_{rb1}\right) + \left(\frac{d_{ib2}}{2} + e_{rb2}\right) + 2\sqrt{(d_{is} + e_{rs})e_{rs}}$$

Figure 14 : Angle definition for cylindrical shell with oblique branch

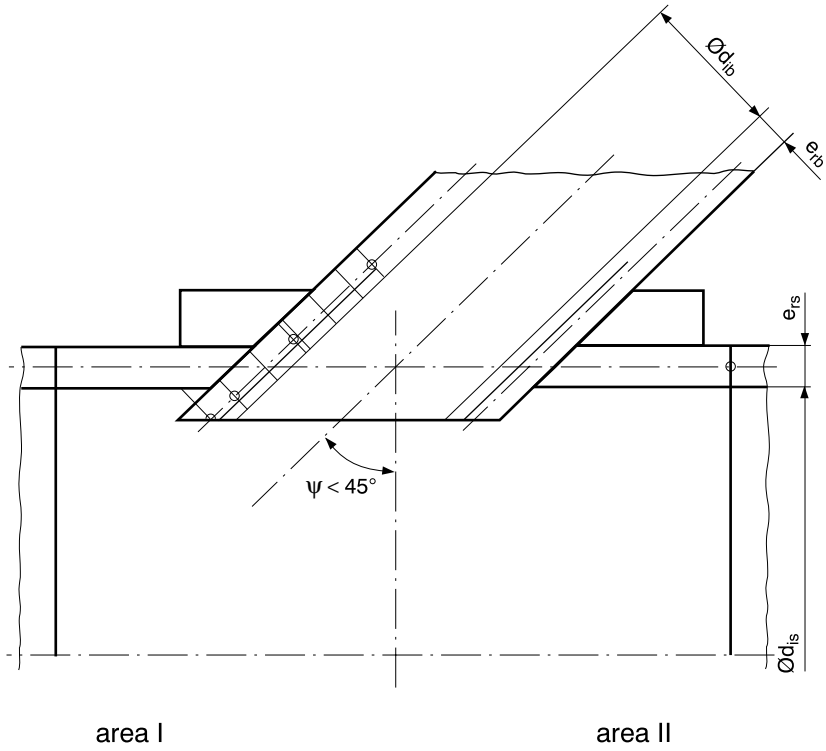

Figure 15 : Angle definition for cylindrical shell with non-radial branch

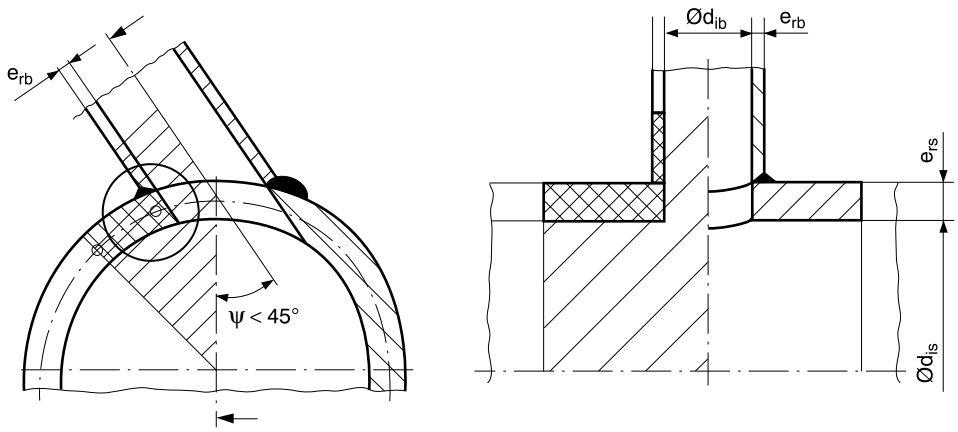

f) Adjacent openings

Where the condition of isolated openings is not fulfilled, the compensation is to be calculated, using Fig 16, as per the following formula:

- If the design stress of the branch is equal or greater than the shell's design stress:

$$\frac{A_p}{A_f} \leq \frac{K}{p} - 0,5$$

- If the design stress of the branch is less than the shell's design stress:

$$\frac{2A_{ps} + 2A_{pb1} + 2A_{pb2} + A_{fs} + A_{fb1} + A_{fb2}}{2\left(A_{fs} + \frac{K_{b1}}{K}A_{fb1} + \frac{K_{b2}}{K}A_{fb2}\right)} \leq \frac{K}{p}$$

Note 1: Adjacent openings are to be calculated additionally as isolated openings.

Figure 16 : Load diagram for cylindrical shell with adjacent branches

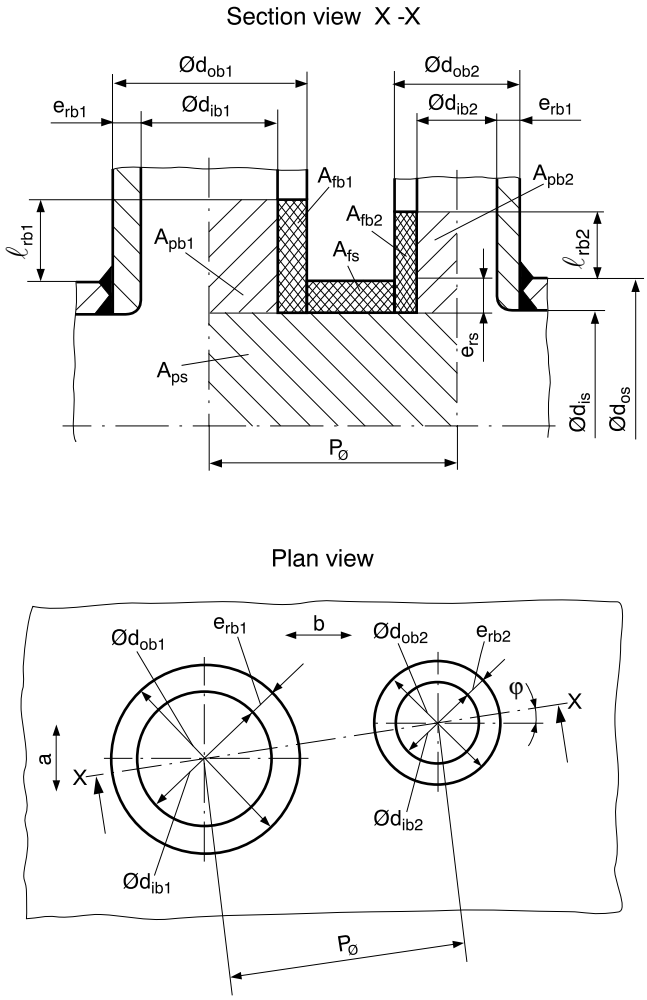

a : Circumferential direction

b : Longitudinal direction

2.8.5 Openings in dished heads

a) The openings in dished heads may be circular, elliptical or oval.

b) The largest diameter of the non-compensated opening is not to exceed one half of the external diameter of the head.

c) The opening is to be so situated that its projection, or its reinforcement projection in the case of compensated openings, is completely contained inside a circle having its centre at the centre of the head and a diameter of 0,8 D, D being the external diameter of the head (see Fig 17). However, a small reinforced opening for drainage may be accepted outside the indicated area.

d) In the case of non-compensated openings (for this purpose, flanged openings are also to be considered as non-compensated), the head thickness is not to be less than that calculated by the formula in [2.5.3] using the greatest of the shape factors C obtained from the graph in Fig 3 as a function of:

H/D and t/D or H/D and $d \cdot (t \cdot D)^{-0,5}$,

where d is the diameter of the largest non-compensated opening in the head, in mm. For oval and elliptical openings, d is the width of the opening in way of its major axis.

e) In all cases the diameter D of the head base, the head thickness t and the diameter d of the largest non-compensated opening are to be such as to meet the following requirements:

- the position of non-compensated openings in the heads is to be as shown in Fig 17
- for flanged openings, the radius r of the flanging (see Fig 17) is not to be less than 25 mm
- the thickness of the flanged part may be less than the Rule thickness.

Figure 17 : Openings on dished heads

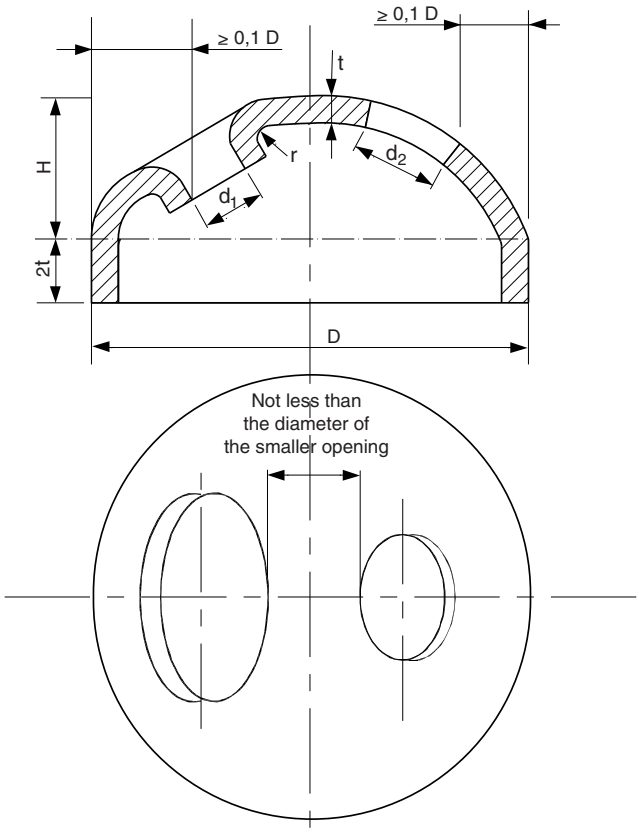

2.8.6 Opening compensation in dished heads

a) Where openings are cut in dished heads and the proposed thickness of the head is less than that calculated by the formula in [2.5.3] with the greatest of the shape factor C according to [2.5.3] the opening is to be compensated.

b) Fig 30, Fig 31, Fig 32 and Fig 33 show typical connections of nozzles and compensating rings.

c) The opening is considered sufficiently compensated when the head thickness t is not less than that calculated in accordance with [2.5.3] and using the shape-factor C obtained from the graph in Fig 3 using the value:

$$\left(d - \frac{A}{t}\right) \cdot (t \cdot D)^{-0,5}$$

instead of:

$d \cdot (t \cdot D)^{-0,5}$

where:

A : Area, in mm², of the total transverse section of the compensating parts

t : Actual thickness of the head, in mm, in the zone of the opening under consideration.

d) When A/t > d, the coefficient C is to be determined using the curve corresponding to the value:

$d \cdot (t \cdot D)^{-0,5} = 0$

e) If necessary, calculations are to be repeated.

2.8.7 Compensation criteria

In the evaluation of the area A, the following is also to be taken into consideration:

a) The material that may be considered for compensating an opening is that located around the opening up to a distance l from the edge of the opening. The distance l, in mm, is the lesser obtained from the following formulae:

$l = 0,5\ d$

$l = (2 \cdot R_{IN} \cdot t)^{0,5}$

where:

d : Diameter of the opening, in mm

R_{IN} : Internal radius of the spherical part, in mm, in the case of hemispherical or torispherical heads

In the case of ellipsoidal heads, R_{IN} is to be calculated by the following formula (see Fig 2 (a):

$$R_{IN} = \frac{[a^4 - x^2(a^2 - b^2)]^{3/2}}{a^4 b}$$

where;

a : Half the major axis of the elliptical meridian section of the head, in mm

b : Half the minor axis of the above section, in mm

x : Distance between the centre of the hole and the rotation axis of the shell, in mm.

b) In the case of nozzles or pads welded in the hole, the section corresponding to the thickness in excess of that required is to be considered for the part which is subject to pressure and for a depth h, in mm, both on the external and internal sides of the head, not greater than:

$(d_B \cdot t_B)^{0,5}$

where d_B and t_B are the diameter of the opening and the thickness of the pad or nozzle, in mm, respectively.

c) The area of the welding connecting nozzle and pad reinforcements may be considered as a compensating section.

d) If the material of reinforcement pads, nozzles and collars has a permissible stress lower than that of the head material, the area A, to be taken for calculation of the coefficient C, is to be reduced proportionally.

2.8.8 Openings in flat end plates

The maximum diameter of an unreinforced opening in a flat end plate is to be determined from the equation:

$$d_{max} = 8e_{rh}\left[1,5\frac{e_{rh}^2}{e_{ch}^2} - 1\right]$$

where:

e_{rh} : Actual thickness of the flat end, in mm

e_{ch} : Required calculated thickness of the flat end, in mm.

2.8.9 Opening compensation in flat end plate

Reinforcement of branch openings is to be achieved by taking account of locally disposed material, including the attachment welds, in excess of the minimum requirements for end plate and branch thickness as shown in Fig 18. The branch thickness is to be increased where required. Compensation is to be considered adequate when the compensating area Y is equal to or greater than the area X requiring compensation.

Area X is to be obtained by multiplying 25% of the inside radius of the branch by the thickness of the flat end plate, calculated for the part of the end plate under consideration.

Area Y is to be measured in a plane through the axis of the branch parallel to the surface of the flat end plate, and is to be calculated as follows:

a) for that part of the branch which projects outside the boiler, calculate the full sectional area of the branch up to a distance ℓ_b from the actual outer surface of the flat end plate and deduct from it the sectional area that the branch would have within the same distance if its thickness were calculated in accordance with equation given in [2.4.3]

b) add to it the full sectional area of that part of the branch that projects inside the boiler (if any) up to a distance ℓ_b from the inside surface of the flat end plate

c) add to it the sectional area of the fillet welds

d) add to it the area obtained by multiplying the difference between the actual flat end plate thickness and its thickness calculated for the part of the end plate under consideration by the length ℓ_s

e) add to it the area of the compensating plate (if any) within the limits of reinforcement shown in Fig 18.

Where material having a lower allowable stress than that of the flat end plate is taken as compensation, its effective area is to be reduced in the ratio of the allowable stresses at the calculation temperature. No credit is to be taken for the additional strength of material having a higher allowable stress than that of the flat end plate

Welds attaching branches and compensating plates are to be capable of transmitting the full strength of the reinforcing area and all other loadings to which they may be subjected.

Figure 18 : Compensation for branch in flat end plate

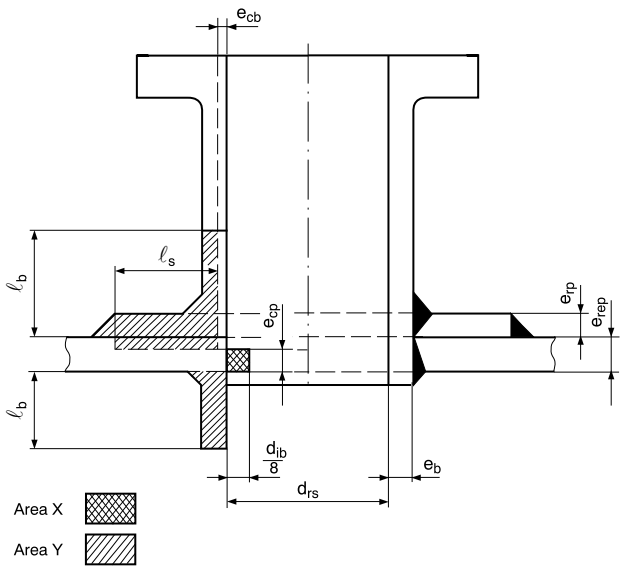

e_{cp} : Thickness calculated in accordance with equation in [2.8.1] for the part under consideration

e_{cb} : Thickness calculated taking efficiency = 1

ℓ_b : The smaller of the two values:
2,5 e_{rep} and (2,5 e_b + e_{rp})

ℓ_s : The greater of the two values:
(e_{rep} + 75) and (d_{ib} / 4)

Area Y is not to be less than area X.

Note 1 : The compensating plate is required only in cases where area Y would otherwise be less than area X.

2.8.10 Covers

a) Circular, oval and elliptical inspection openings are to be provided with steel covers. Inspection openings with a diameter not exceeding 150 mm may be closed by blind flanges.

b) The thickness of the opening covers is not to be less than the value t, in mm, given by the following formula:

$$t = 1{,}22 \cdot a \cdot \left(\frac{pC}{K}\right)^{0,5}$$

where:

a : The minor axis of the oval or elliptical opening, measured at half width of gasket, in mm

b : The major axis of the oval or elliptical opening, measured at half width of the gasket, in mm

C : Coefficient in Tab 13 as a function of the ratio b/a of the axes of the oval or elliptical opening, as defined above. For intermediate values of the ratio b/a, the value of C is to be obtained by linear interpolation.

For circular openings the diameter d, in mm, is to be used in the above formula instead of a.

c) The thickness obtained by the formula in item a) is “net” thickness, as it does not include any corrosion allowance. The thickness obtained by the above formula is to be increased by 1 mm for classification purpose. See also [2.4.7].

Table 13 : Coefficient C for oval or elliptical covers

b/a	1,00	1,05	1,10	1,15	1,20	1,25	1,30	1,40	1,50	1,60
C	0,206	0,220	0,235	0,247	0,259	0,271	0,282	0,302	0,321	0,333
b/a	1,70	1,80	1,90	2,00	2,50	3,00	3,50	4,00	4,50	5,00
C	0,344	0,356	0,368	0,379	0,406	0,433	0,449	0,465	0,473	0,480

2.9 Regular pattern openings - Tube holes

2.9.1 Definition

Openings may be considered as regular pattern openings when not less than three non isolated openings are disposed in regularly staggered rows in longitudinal or circular direction of a shell.

In such a case, instead of a direct calculation of the compensation of openings, the thickness of the shell could be calculated by application of applicable formulae given in [2.4], [2.5] with a reduced efficiency e as indicated in [2.9.2] and [2.9.3].

This requirement apply for pressure vessels and for boiler.

2.9.2 Efficiency factor of tube holes in cylindrical tube plates

The efficiency factor e of pipe holes in cylindrical shells pierced by tube holes is to be determined by direct calculation or by another suitable method accepted by the Society. In the case of cylindrical holes of constant diameter and radial axis, the efficiency factor e may be determined by the following formula (see Fig 19):

$$e = \frac{1}{\frac{s}{s-d} \cdot (1 - (0{,}5 \cdot \sin^2\alpha)) + m \cdot \sin 2\alpha}$$

where:

s : Pitch of the hole row considered, in mm

d : Diameter of holes, in mm. The hole diameter d may be reduced by the amount Y/e_{cp} where Y is the compensating area, in mm², of nozzle and welds and e_{cp} the calculated unpierced shell thickness, see [2.8.9] and Fig 18

α : Angle between the axis of hole row considered and the axis of the cylinder (α = 0° if the hole row is parallel to the cylinder generating line; α = 90° for circumferential hole row)

m : Coefficient depending upon the ratio d/s, as obtained from Tab 14. For intermediate values of d/s, the value of m is to be obtained by linear interpolation.

The value of e actually used is to be the smallest calculated value for either longitudinal, diagonal or circumferential rows of holes.

Figure 19 : Hole pattern in cylindrical shells

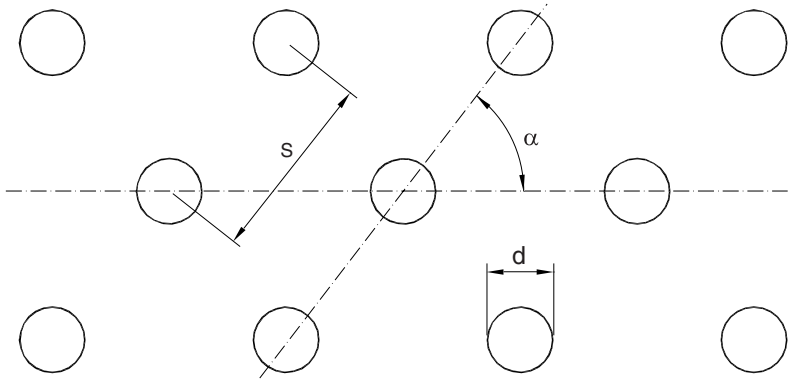

Table 14 : Coefficient m

d/s	0,30	0,35	0,40	0,45	0,50	0,55	0,60	0.65	0,70	0,75	0,80
m	0,137	0,175	0,220	0,274	0,342	0,438	0,560	0,740	1,010	1,420	2,060

2.9.3 Welded shells with tube holes and efficiency factor of different hole patterns

Where shells have welding butts and/or different groups of hole patterns, the value to be assumed for the efficiency e in the formulae is the minimum of the values calculated separately for each type of welding (as per [2.4.2]) and for each configuration of holes (as per [2.9.1]).

2.9.4 Rectangular section headers

a) For seamless type headers of rectangular section design, the wall thickness t, in mm, in way of corner fillets and the thickness t_1, in mm, of any drilled wall is not to be less than those given by the following formulae, as appropriate (see Fig 20):

$$t = \left(\frac{100pM_1}{K}\right)^{0,5}$$

$$t_1 = \left(\frac{100pM_2}{eK}\right)^{0,5}$$

where (see also Fig 20):

t : Wall thickness at the corners, in mm

t_1 : Thickness of drilled wall, in mm

p : Design pressure, in MPa

K : Permissible stress, in N/mm², obtained as specified in [2.3]

a : Internal half width of the header, in a direction parallel to the wall under consideration, in mm

b : Internal half width of the header, in a direction normal to the wall under consideration, in mm

c : Distance between the axis of the hole row considered and the centreline of the header wall, in mm

e : Efficiency factor of holes in the wall, determined by the following formulae:

$$e = \frac{s-d}{s} \quad \text{for } d < a$$

$$e = \frac{s-0{,}67d}{s} \quad \text{for } a \le d < 1{,}3a$$

$$e = \frac{s-0{,}33d}{s} \quad \text{for } d \ge 1{,}3a$$

where:

s : Pitch of the holes, in mm, of the longitudinal or diagonal row under consideration. For a staggered pattern of holes the pitch of the diagonal row is to be considered

d : Diameter of the holes, in mm

M_1 : Coefficient to be calculated by the following formula:

$$M_1 = \frac{a^2+b^2-ab}{50}$$

M_2 : Coefficient (to be taken always positive) to be calculated by one of the following formulae, as appropriate:

- For a non-staggered pattern of holes:

$$M_2 = \frac{b^2-\frac{1}{2}a^2-ab+\frac{3}{2}c^2}{50}$$

- For a staggered pattern of holes:

$$M_2 = \frac{b^2-\frac{1}{2}a^2-ab}{50}\cos\alpha$$

where α is the angle between the axis of the diagonal row of the holes under consideration and the axis of the header, in the case of a staggered pattern of holes.

b) The thickness obtained by the formulae in a) is "net" thickness, as it does not include any corrosion allowance. The thickness obtained by the above formula is to be increased by 1,5 mm. See also [2.4.7].

Figure 20 : Rectangular section headers

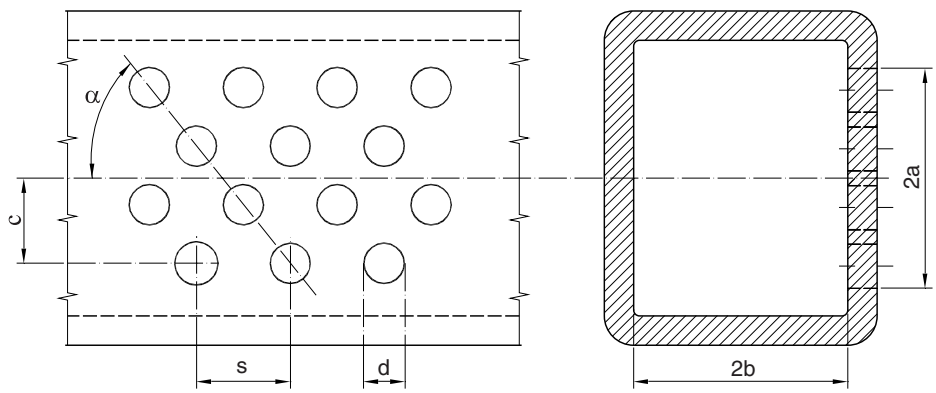

2.10 Water tubes, superheaters and economiser tubes of boilers

2.10.1

a) The thickness of tubes of evaporating parts, economisers and superheaters exposed to gases which are subject to internal pressure is not to be less than the value t given by the following formula:

$$t = \frac{pd}{2K+p} + 0{,}3$$

where:

p : Design pressure, in MPa

K : Permissible stress, in N/mm², obtained as specified in [2.3]

d : Outside diameter of tube, in mm.

However, irrespective of the value calculated by the formulae in item a), the thickness t of tubes is not to be less than the values given in Tab 15.

b) The values of t determined by the above-mentioned formula are to be considered as theoretical values for straight tubes, not taking account of the manufacturing tolerance. Where the tubes are not sized precision tubes, the thickness calculated by the formula in item a) is to be increased by 12,5% to take into account the manufacturing tolerance. For bent tubes, the thickness of the thinner part in way of the bend is not to be less than that given by the formula.

c) Whenever abnormal corrosion and erosion may occur during service, the corrosion constant of 0,3 in the formula may be increased to the satisfaction of the Society.

d) The thickness of tubes which form an integral part of the boiler and which are not exposed to combustion gases is to comply with the requirements for steam pipes (see Ch 1, Sec 10, [15]).

Table 15 : Minimum thickness of water tubes

Outside diameter, in mm	Minimum thickness in mm of tubes subject to internal pressure of cylindrical boilers and water tube boilers having the feed water system	
	Closed type, if equipped with suitable devices for reducing the oxygen concentration in the water	Open type, not equipped with suitable devices for reducing the oxygen concentration in the water
< 38	1,8	2,9
38 - 48,3	2,0	2,9
51 - 63,5	2,4	2,9
70	2,6	3,2
76,1 - 88,9	2,9	3,2
101,6 - 127	3,6	–

2.11 Additional requirements for fired pressure vessels

2.11.1 Insulation for headers and combustion chambers

Those parts of headers and/or combustion chambers which are not protected by tubes and are exposed to radiant heat or to high temperature gases are to be covered by suitable insulating material.

2.11.2 Connections of tubes to drums and tube plates

Tubes are to be adequately secured to drums and/or tube plates by expansion, welding or other appropriate procedure.

a) Where the tubes are secured by expanding or equivalent process, the height of the shoulder bearing the tube, measured parallel to the tube axis, is to be at least 1/5 of the hole diameter, but not less than 9 mm for tubes normal to the tube plate or 13 mm for tubes angled to the tube plate. The tubes ends are not to project over the other face of the tube plate more than 6 mm.

b) The tube ends intended to be expanded are to be partially annealed when the tubes have not been annealed by the manufacturer.

2.12 Additional requirements for vertical boilers and fire tube boilers

2.12.1 General

The scantlings of the shells of vertical boilers and fire tube boilers are to be determined in accordance with [2.4].

2.12.2 Ends of vertical boilers

a) The minimum thickness of the dished ends forming the upper part of vertical boilers and subject to pressure on their concave face is to be determined in accordance with [2.5].

b) When the end is supported in its centre by an uptake, the minimum thickness t, in mm, is to be calculated with the following formula:

$$t = 0{,}77 \cdot \frac{pR_I}{K}$$

where:

p : Design pressure, in MPa

K : Permissible stress, in N/mm^2, obtained as specified in [2.3]

R_I : Radius of curvature at the centre of the end measured internally. R_I is not to exceed the external diameter of the shell.

c) The thickness obtained by the formula in item b) is “net” thickness, as it does not include any corrosion allowance. The thickness obtained by the above formula is to be increased by 0,7 mm. See also [2.4.7].

d) For ends supported by an uptake at their centre, the corner radius measured internally is not to be less than 4 times the end thickness or 65 mm, whichever is the lesser and the inside radius of curvature on the flange to uptake is not to be less than twice the end thickness or 25 mm, whichever is the lesser.

2.12.3 Supported flat head

a) Breathing space

- Stays are to give breathing space around the furnace tube connections and tube nests and equally divide the unstayed areas. Breathing space between furnace tube and tube nests are to be a minimum of 50 mm or 5% of the shell outside diameter, whichever is the larger, but need not be more than 100 mm.
- Breathing space between furnace tube and shell depends on the thickness of the plate of the type of end and of the dimensions of the boiler but is to be not less than 50 mm or, for bowling hoop furnaces tubes, not less than 75 mm.

b) The thickness of stayed flat heads, or of heads supported by flanges, is not to be less than the value t, in mm, given by the following formula:

$$t = D\left[\frac{100p}{CC_1K(1+C_2B^2)}\right]^{0,5}$$

where:

B : Ratio of the thickness of the large washer or doubler, where fitted, to the thickness of the plate:
$B = t_1 / t$
The value of B is to be taken between 0,67 and 1

K : Permissible stress, in N/mm², obtained as specified in [2.3]

C : C = 1 when the plate is not exposed to flame
C = 0,88 when the plate is exposed to flame

C_1 : C_1 = 462 when the plate is supported by welded stays
C_1 = 704 for plates supported by flanges or equivalent

C_2 : C_2 = 0 when no doublers are fitted
C_2 = 0,85 when a complete doubling plate is fitted, adequately joined to the base plate.

The value of D is to be in accordance with the following provisions:

- In the parts of the flat heads between the stays:

D : D = diameter, in mm, of the largest circle which can be drawn through the centre of at least three stays without enclosing any other stay, where the stays are not evenly spaced (see Fig 21); or
$D = (a^2 + b^2)^{0,5}$ where the stays are evenly spaced, considering the most unfavourable condition,
where:

a : Distance between two adjacent rows of stays, in mm

b : Pitch of stays in the same row, in mm

Figure 21 :

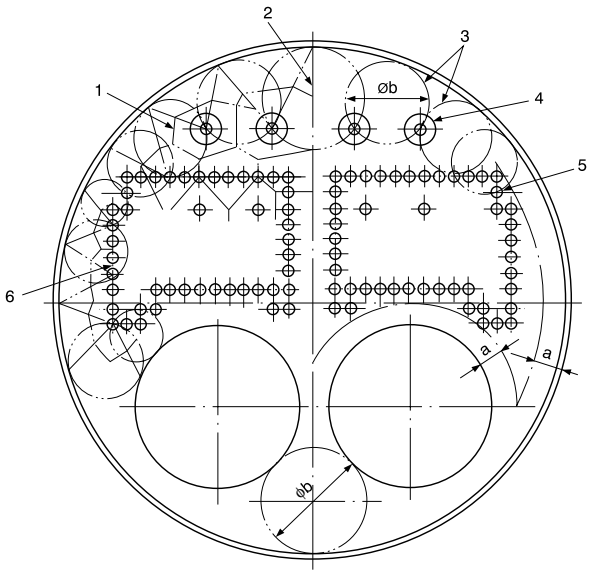

Key:

1 : Boundaries of areas supported by individual stays

2 : To establish the area supported by bar stays or stay tubes in boundary rows, the boundary of the loaded area is to terminate at the centre of the associated main circle

3 : Main circles, diameter b

4 : Bar stays

5 : Stay tubes

6 : Termination of boundary areas where stay tubes are situated in the boundary rows only.

- In the parts of the flat heads between the stays and the boundaries, where flat heads are generally supported by flanges or shapes, or connected to other parts of the boiler:

  D : Diameter, in mm, of the largest circle which can be drawn through not less than three points of support (stay centres or points of tangency of the circle with the contour line). To this end, the contour of the part under consideration is to be drawn at the beginning of the flanging or connection curve if its inside radius does not exceed 2,5 times the thickness of the plate, or, where such radius is greater, at the above-mentioned distance (of 2,5 times the thickness of the plate) from the ideal intersection with other surfaces (see Fig 21).

c) When applying the formulae for calculation of thickness of heads covered by this sub-article, the position of plates in the most unfavourable condition is to be considered.

d) Where various types of supports are provided, the value of C_1 should be the arithmetic mean of the values of C_1 appropriate to each type of support.

e) The thickness obtained by the formulae in a), is "net" thickness, as it does not include any corrosion allowance. The thickness obtained by the above formula is to be increased by 1 mm. See also [2.4.7].

2.12.4 Flat tube plates

a) Flat tube plates in tube bundles

The thickness of the parts of flat tube plates contained in the tube bundle and supported by stay tubes is not to be less than the value t, in mm, given by the following formula:

$$t = s\left(\frac{p}{2,8K}\right)^{0,5}$$

where:

p : Design pressure, in MPa

K : Permissible stress, in N/mm², obtained as specified in [2.3]

s : Pitch of stay tubes, taken as the greatest mean pitch of the stay tubes supporting a quadrilateral portion of the plate, in mm.

Moreover the spacing of tube holes (diameter d) is to be such that the minimum width, in mm, of any ligament between the tube holes is to be not less than:

- for expanded tubes:

  (0,125 d + 12,5) mm
- for welded tubes:
  - for gas entry temperatures greater than 800°C:

    (0,125 d + 9) mm, but need not exceed 15 mm
  - for gas entry temperatures less than or equal to 800°C:

    0,125 d + 7) mm, but need not exceed 15 mm.

Moreover the calculated thickness of tube plates is to be not less than the following:

- 12 mm where the tubes are expanded into the tube plate when the diameter of the tube hole does not exceed 50 mm, or 14 mm when the diameter of the tube hole is greater than 50 mm, or
- 6 mm where the tubes are attached to the tube plate by welding only.

b) Flat tube plates of combustion chamber in vertical boilers

Where tube plates contained in the tube bundle are simultaneously subject to compression due to the pressure in the combustion chamber, their thickness, as well as complying with the requirements in item a) is not to be less than the value t, in mm, given by the following formula:

$$t = \frac{p l s_1}{1,78(s_1 - d)K}$$

where:

l : Depth of the combustion chamber, in mm

s_1 : Horizontal pitch of tubes, in mm

d : Inside diameter of plain tubes, in mm.

For the meaning of other symbols, see item a).

c) Tube plates outside tube bundles

For those parts of tube plates which are outside the tube bundle, the formula in [2.13.3] is to be applied, using the following coefficients C_1 and C_2:

$C_1 = 390$

$C_2 = 0,55$

Doublers are only permitted where the tube plate does not form part of a combustion chamber.

d) Tube plates not supported by stays

Flat tube plates which are not supported by stay tubes (e.g. in heat exchangers), are subject of special consideration by the Society (see also [2.14]).

e) Stay and stay tube scantling

- the diameter of solid stays of circular cross-section is not to be less than the value d calculated by the following formula:

$$d = \left(\frac{pA}{K}\right)^{0,5}$$

where:

d : Minimum diameter, in mm, of the stay throughout its length

A : Area supported by the stay, in mm²

K : $K = R_m / 7$

R_m : Minimum ultimate tensile strength of the stay material, in N/mm².

The cross section of tube stays is to be equivalent to that of a solid stay supporting the same area, whose diameter is calculated by the above formula.

Stays which are not perpendicular to the supported surface are to be of an adequately increased diameter depending on the component of the force normal to the plate.

- where articulated stays are used, articulation details are to be designed assuming a safety factor for articulated elements not less than 5 with respect to the value of R_m and a wear allowance of 2 mm.

The articulation is to be of the fork type and the clearance of the pin in respect of the holes is not to exceed 1,5 mm. The pin is to bear against the jaws of the fork and its cross-sectional area is not to be less than 80% of the cross-sectional area of the stay. The width of material around the holes is not to be less than 13 mm.

- where stays are flanged for joining to the plate, the thickness of the flange is not to be less than one half the diameter of the stay.
- for welded connections of stays to tube plates, see Fig 37.

f) Stay and stay tubes construction:

- in general, doublers are not to be fitted in plates exposed to flame
- as far as possible, stays are to be fitted perpendicularly to the supported surface
- long stays in double front boilers and, in general, stays exceeding 5 m in length, are to be supported at mid-length
- where the ends of stay tubes are of increased thickness, the excess material is to be obtained by forging and not by depositing material by means of welding
- after forging, the ends of stay tubes are to be stress relieved.

g) Gusset stays

Tube plate may be supported by gussets stays with full penetration welds to plate and shell.

The general shape and the scantling are to be in accordance with a standard accepted by the Society.

h) Girders

Where tops of combustion chambers, or similar structures, are supported by girders of rectangular section associated with stays, the thickness of the single girder or the aggregate thickness of all girders, at mid-length, is not to be less than the value t determined by the appropriate formula below, depending upon the number of stays.

- In case of an odd number of stays:

$$t = \frac{pL(L-s)l}{0,25R_m a^2} \cdot \frac{n+1}{n}$$

- In case of an even number of stays:

$$t = \frac{pL(L-s)l}{0,25R_m a^2} \cdot \frac{n+2}{n+1}$$

where:

p : Design pressure, in MPa

a : Depth of the girder plate at mid-length, in mm

L : Length of girder between supports, in mm

s : Pitch of stays, in mm

n : Number of stays on the girder

l : Distance between centres of girders, in mm

R_m : Minimum ultimate tensile strength of the material used for the plates, in N/mm².

The above formulae refer to the normal arrangement where:

- the stays are regularly distributed over the length L
- the distance from the supports of the outer stays does not exceed the uniform pitch s
- when the tops of the combustion chambers are connected to the sides with curved parts with an external radius less than 0,5 l, the distance of end girders from the inner part of the side surface does not exceed l
- when the curvature radius mentioned under item just above exceeds 0,5 l, the distance of the end girders from the beginning of the connection does not exceed 0,5 l.

In other cases a direct calculation is to be made using a safety factor not less than 5, with respect to the minimum value of the tensile strength R_m.

i) Ogee rings

The thickness of ogee rings connecting the furnaces to the shell in vertical auxiliary boilers (see Fig 22), where the latter support the weight of the water above the furnace, is not to be less than the value t, in mm, given by the following formula:

$$t = [1{,}02 \cdot 10^{-3} \cdot pD_A \cdot (D_A - d_A)]^{0,5} + 1$$

where:

p : Design pressure, in MPa

D_A : Inside diameter of boiler shell, in mm

d_A : Inside diameter of the lower part of the furnace where it joins the ogee ring, in mm.

Figure 22 : Ogee ring

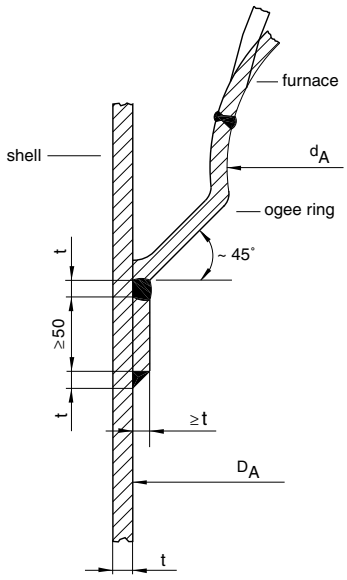

2.12.5 Fire tubes

a) The thickness of fire tubes subject to external pressure in cylindrical boilers is not to be less than the value t, in mm, calculated by the following formula:

$$t = \frac{pd}{0{,}15R_m} + 1{,}8$$

where:

p : Design pressure, in MPa

d : Outside diameter of tube, in mm

R_m : Minimum ultimate tensile strength of the tube material, in N/mm^2.

The minimum acceptable thickness is given in Tab 16.

b) The values of t determined by the above-mentioned formula are to be considered as theoretical values for straight tubes, not taking account of the manufacturing tolerance. Where the tubes are not sized precision tubes, the thickness calculated by the formula in a) is to be increased by 12,5% to take into account the manufacturing tolerance. In the case of bent tubes, the thickness of the thinner part in way of the bend is not to be less than that given by the above formula.

c) Whenever abnormal corrosion and erosion may occur during service the corrosion constant of 1,8 in the formula may be increased to the satisfaction of the Society.

Table 16 : Minimum thickness of fire tubes

Nominal outside diameter	Lowest nominal thickness t
d ≤ 88,9	3,00
88,9 < d ≤ 114,3	3,15
114,3 < d ≤139,7	3,50
139,7 < d ≤168,3	3,99

2.12.6 Furnaces general points

a) Thermal design of furnace tubes.

The heat input for a given furnace tube inside diameter is not to exceed a value compatible with the chosen design temperature. Burners with a fixed firing rate are not to be used for heat inputs exceeding 1 MW per furnace tube.

b) The minimum thickness of furnaces is to be calculated for elastic buckling and plastic deformation in accordance with the requirements of a Standard for pressure vessels subject to external pressure accepted by the Society.

c) However, the minimum thicknesses of furnaces and cylindrical ends of combustion chambers of fire tube boilers are to be not less than the value t given by the appropriate formulae in [2.12.7], [2.12.8] and [2.12.9].

d) The thickness of furnaces is not to be less than 8 mm for plain furnace and 10 mm for corrugated furnace and the stays are to be spaced such that the thickness does not exceed 22 mm.

e) All the thicknesses obtained for furnaces by the formulae in [2.12.7], [2.12.8], [2.12.9] and [2.12.4] are “net” thicknesses, as they do not include any corrosion allowance. The thicknesses obtained by the above formulae are to be increased by 1 mm. See also [2.4.7].

2.12.7 Plain furnace tubes

a) Plain furnace tube

The minimum thickness t of plain cylindrical furnaces is to be not less than the greater value, in mm, obtained from the following formulae:

$$t = \frac{B}{2}\left[1 + \sqrt{1 + \frac{0,12D \cdot u}{(1 + 5D/L)B}}\right]$$

$$t = D^{0,6}[(LS_2p)/(2,6E)]^{0,4}$$

where:

$$B = \frac{pDS_1}{2R_{S,MIN,T}(1 + 0,1D/L)}$$

S_1 : Safety factor, equal to 2,5

L : Unstayed length of furnace, in mm

u : Departure from circularity, in %, equal to:

$$u = \frac{2(D_{max} - D_{min})}{D_{max} + D_{min}} \times 100$$

u is to be taken as 1,5% for plain furnace tubes

S_2 : Safety factor for buckling, equal to:

- 3 for u ≤1,5%
- 4 for 1,5% < u ≤ 2%

E : Elastic modulus, in MPa, at design temperature T, in °C, and equal to:

E = 208800 – 93,4 T

b) Stiffeners

Stiffeners welded to furnaces tubes according to a standard accepted by the Society may be considered as providing effective stiffening (reduction of L in upper formulae).

2.12.8 Corrugated furnace tubes

The minimum thickness of corrugated furnace tubes, in mm, is to be determined by:

$$t = \frac{pD_E}{0,26R_m}$$

where:

D_E : External diameter of the furnace, in mm, measured at the bottom of the corrugation.

This formula apply for Fox and Morisson type furnaces tubes. The scantling of furnaces of other types and the use of stiffeners are to be especially considered by the Society.

2.12.9 Hemispherical furnaces

The minimum thickness t, in mm, of hemispherical furnaces is not to be less than the value given by the following equation:

$$t = \frac{pD_E}{120}$$

2.13 Bottles containing pressurised gases

2.13.1 General

a) The following requirements apply to bottles intended to contain pressurised and/or liquefied gases at ambient temperature, made by seamless manufacturing processes.

b) In general, such bottles are to have an outside diameter not exceeding 420 mm, a length not exceeding 2000 mm and capacity not exceeding 150 litres (see also [3.4.1]).

c) For bottles exceeding the above capacity and dimensions, the following requirements may be applied at the discretion of the Society.

2.13.2 Cylindrical shell

The wall thickness of the cylindrical shell is not to be less than the value t, in mm, determined by the following formula:

$$t = \frac{p_H D_E}{2K + p_H}$$

where:

p_H : Hydrostatic test pressure, in MPa. This pressure is to be taken as 1,5 times the setting pressure of the safety valves with the following exceptions:
- in addition, for CO_2 bottles, this pressure is not to be less than 25 MPa
- for refrigerants, the value of hydrostatic test pressure is given in Part F, Chapter 7

D_E : Outside diameter of tube, in mm

$K = R_{S,MIN} / 1,3$

$R_{S,MIN}$: Value of the minimum yield strength (R_{eH}), or 0,2% proof stress ($R_{p\,0,2}$), at the ambient temperature, in N/mm². In no case is the value $R_{S,MIN}$ to exceed:
- 0,75 R_m for normalised steels
- 0,90 R_m for quenched and tempered steels.

2.13.3 Dished heads

Dished ends are to comply with the following requirements:

a) Hemispherical ends: the thickness of the ends is to be not less than the thickness calculated for spherical shells in accordance with [2.4.4]

b) Convex ends: see Fig 23

c) Concave base ends: see Fig 24

d) Ends with openings: see Fig 25

e) Other types of ends are to be specially considered by the Society.

Figure 23 : Dished convex ends

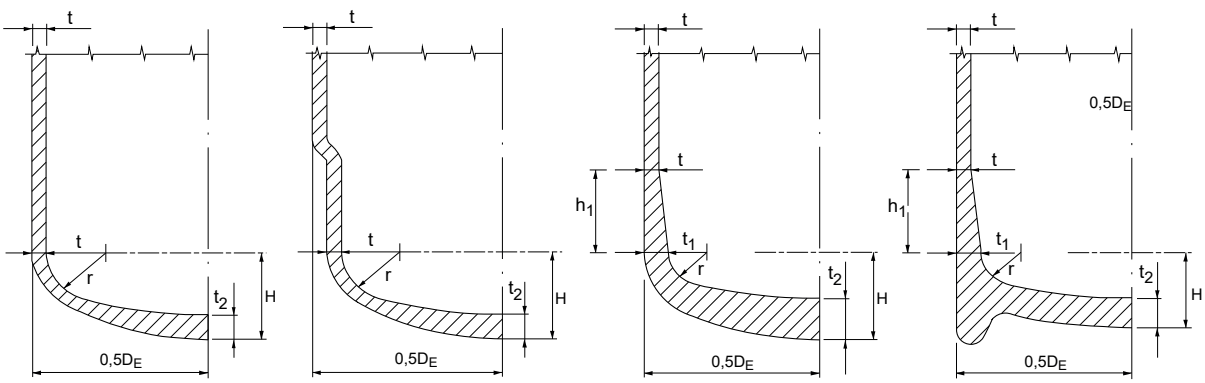

$H/D_E \geq 0,20$ $r \geq 0,075\ D_E$ $t_1 \geq 1,25\ t$ $t_2 \geq 1,5\ t$ $h_1 \geq 6\ t$

Figure 24 : Dished concave ends

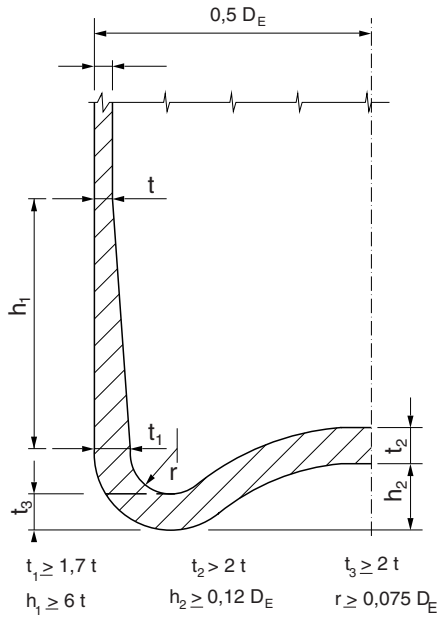

Figure 25 : Heads with openings

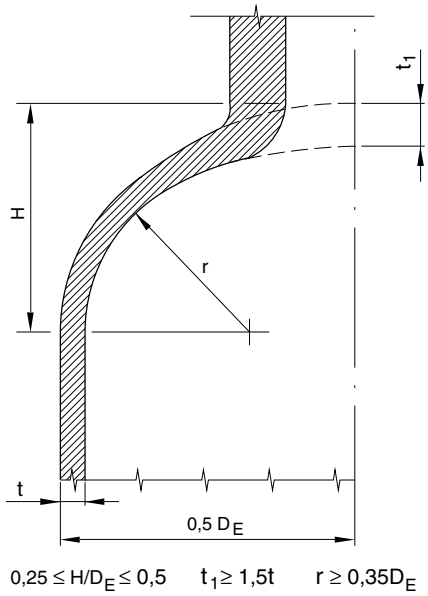

2.14 Heat exchangers

2.14.1 Scantlings

a) Vessels are to be designed in accordance with the applicable requirements stated in [2.4] and [2.5].

b) Tubes are to be designed in accordance with [2.10.1].

c) Tube plates are to be designed in accordance with a standard accepted by the Society.

2.14.2 Thermal oil heat exchangers

The provisions of [2.14.1] apply also to thermal oil heat exchangers. However, irrespective of the thickness obtained by the formula in [2.10.1], the tube thickness of oil fired and exhaust fired thermal oil heaters is to be not less than the values indicated in Tab 17.

Table 17 : Minimum thickness ofthermal oil heat exchanger tubes

Outside diameter, in mm	Minimum thickness, in mm, of tubes subject to internal pressure of oil fired and exhaust fired thermal oil heaters
< 63,5	2,4
70 - 89	2,9
> 89	3,6

3 Design and construction - Equipment

3.1 All pressure vessels

3.1.1 Drainage

a) Each air pressure vessel is to be fitted with a drainage device allowing the evacuation of any oil or water accumulated in the vessel.

b) Drainage devices are also to be fitted on other vessels, in particular steam vessels, in which condensation water is likely to accumulate.

3.2 Boilers and steam generators

3.2.1 Safety valve arrangement

a) Every steam boiler and every steam generator with a total heating surface of 50 m² and above is to be provided with not less than two spring loaded safety valves of adequate capacity. For steam boilers and steam generators having heating surface less than 50 m², only one safety valve need be fitted.

b) Where a superheater is an integral part of the boiler, at least one safety valve is to be located on the steam drum and at least one at the superheater outlet. The valves fitted at the superheater outlet may be considered as part of the boiler safety valves required in item a), provided that their capacity does not account for more than 25% of the total capacity required in [3.2.2], unless specially considered by the Society.

c) Where fitted, superheaters which may be shut-off from the boiler are to be provided with at least one safety valve; such valve(s) cannot be considered as part of the boiler safety valves required in item a).

d) In the case of boilers fitted with a separate steam accumulator, safety valves may be fitted on the accumulator if no shut-off is provided between it and the boiler and if the connecting pipe is of a size sufficient to allow the whole steam production to pass through, without increasing the boiler pressure more than 10% above the design pressure.

3.2.2 Relieving capacity of safety valves

a) The relieving capacity of each safety valve Q, in kg/h, is to be determined by the appropriate formula below in order that:

$Q \geq W$

- saturated steam:

$$Q = \frac{C \cdot A \cdot (10 \cdot P + 1{,}05)}{100}$$

- superheated steam:

$$Q = \frac{C \cdot A \cdot (10 \cdot P + 1{,}05)}{100} \times \sqrt{\frac{v}{v_s}}$$

where:

W : Maximum steam production, in kg/h, as defined by the maximum power of the heating equipment; otherwise the value of W is to be based on evaporating capacities (referring to evaporating surfaces of the boiler concerned) less than the following:

- 14 kg/(m²·h) for exhaust gas heated boilers
- 29 kg/(m²·h) for oil fired boilers
- 60 kg/(m²·h) for water walls of oil fired boilers

A : Aggregate area, in mm², of the orifices in way of the seat of the valve, deducting the obstructions corresponding to the guides and the conformation of the valve in full lift position

p : Maximum working pressure of the boiler or other steam generator, in MPa. For superheated steam safety valves, P is to be the pressure at the superheater outlet

C : Coefficient with the following values:

- 4,8 for ordinary safety valves, i.e. where the valve lift is at least 1/24 of the internal diameter of the seat
- 10 for high lift safety valves, i.e. where the valve lift is at least 1/12 of the internal diameter of the seat
- 20 for full lift safety valves, i.e. where the valve lift is at least 1/4 of the internal diameter of the valve

Higher values of coefficient C may be admitted for safety valves of approved type and having undergone, in the presence of the Surveyor or according to a procedure considered as equivalent by the Society, capacity tests with conditions of pressure and temperature comparable to those of the plant considered. In such a case, coefficient C is to be, as a rule, taken as 90% of the resulting value from the capacity test

v : Specific volume of saturated steam at the pressure corresponding to the superheater outlet

v_S : Specific volume of superheated steam at the temperature corresponding to the superheater outlet.

b) When the safety valves are fitted at the superheater outlet. Their relieving capacity is to be such that, during the discharge of safety valves, a sufficient quantity of steam is circulated through the superheater to avoid damage.

c) The orifice diameter in way of the safety valves seat is not to be less than 40 mm. Where only one safety valve need be fitted, the orifice minimum diameter is not to be less than 50 mm. Valves of large relieving capacity with 15 mm minimum diameter may be accepted for boilers with steam production not exceeding 2000 kg/h.

d) Independently of the above requirements, the aggregate capacity of the safety valves is to be such as to discharge all the steam that can be generated without causing a transient pressure rise of more than 10% over the design pressure.

3.2.3 Miscellaneous safety valve requirements

a) Safety valves operated by pilot valves

The arrangement on the superheater of large relieving capacity safety valves, operated by pilot valves fitted in the saturated steam drum, is to be specially considered by the Society.

b) Safety valve setting

- safety valves are to be set under steam in the presence of the Surveyor to a pressure not higher than 1,03 times the design pressure
- safety valves are to be so constructed that their setting may not be increased in service and their spring may not be expelled in the event of failure. In addition, safety valves are to be provided with simple means of lifting the plug from its seat from a safe position in the boiler or engine room
- where safety valves are provided with means for regulating their relieving capacity, they are to be so fitted that their setting cannot be modified when the valves are removed for surveys.

c) Safety valve fitting on boiler

- the safety valves of a boiler are to be directly connected to the boiler and separated from other valve bodies
- where it is not possible to fit the safety valves directly on the superheater headers, they are to be mounted on a strong nozzle fitted as close as practicable to the superheater outlet. The cross-sectional area for passage of steam through restricted orifices of the nozzles is not to be less than 1/2 the aggregate area of the valves, calculated with the formulae of [3.2.2] when $C \leq 10$, and not less than the aggregate area of the valves when $C > 10$
- safety valve bodies are to be fitted with drain pipes of a diameter not less than 20 mm for double valves, and not less than 12 mm for single valves, leading to the bilge or to the hot well. Valves or cocks are not to be fitted on drain pipes.

d) Exhaust pipes

- the minimum cross-sectional area of the exhaust pipes of safety valves which have not been experimentally tested is not to be less than C times the aggregate area A
- the cross-sectional area of the exhaust manifold of safety valves is to be not less than the sum of the areas of the individual exhaust pipes connected to it
- silencers fitted on exhaust manifolds are to have a free passage area not less than that of the manifolds
- the strength of exhaust manifolds and pipes and associated silencers is to be such that they can withstand the maximum pressure to which they may be subjected, which is to be assumed not less than 1/4 of the safety valve setting pressure
- in the case that the discharges from two or more valves are led to the same exhaust manifold, provision is to be made to avoid the back pressure from the valve which is discharging influencing the other valves
- exhaust manifolds are to be led to the open and are to be adequately supported and fitted with suitable expansion joints or other means so that their weight does not place an unacceptable load on the safety valve bodies.

e) Steam generator heated by steam

Steam heated steam generators are also to be protected against possible damage resulting from failure of the heating coils. In this case, the area of safety valves calculated as stated in [3.2.2] may need to be increased to the satisfaction of the Society, unless suitable devices limiting the flow of steam in the heating coils are provided.

3.2.4 Access arrangement

a) Boilers are to be provided with openings in sufficient number and size to permit internal examination, cleaning and maintenance operations. In general, all pressure vessels which are part of a boiler with inside diameter exceeding 1200 mm, and those with inside diameter exceeding 800 mm and length exceeding 2000 mm, are to be provided with access manholes.

b) Manholes are to be provided in suitable locations in the shells, headers, domes, and steam and water drums, as applicable. The “net” (actual hole) dimension of elliptical or similar manholes is to be not less than 300mm x 400mm. The “net” diameter of circular manholes (actual hole) cannot be less than 400 mm. The edges of manholes are to be adequately strengthened to provide compensation for vessel openings in accordance with [2.8.4], [2.8.6] and [2.8.9], as applicable.

c) In pressure vessels which are part of a boiler and are not covered by the requirement in item a) above, or where an access manhole cannot be fitted, at least the following openings are to be provided, as far as practicable:

- head holes: minimum dimensions:

  220mm x 320mm (320 mm diameter if circular)

- handholes: minimum dimensions: 87mm x 103mm

- sight holes: minimum diameter: 50 mm.

d) Sight holes may only be provided when the arrangement of manholes, head holes, or handholes is impracticable.

e) Covers for manholes and other openings are to be made of ductile steel, dished or welded steel plates or other approved design. Grey cast iron may be used only for small openings, such as handholes and sight holes, provided the design pressure p does not exceed 1 MPa and the design temperature T does not exceed 220°C.

f) Covers are to be of self-closing internal type. Small opening covers of other type may be accepted by the Society on a case by case basis.

g) Covers of the internal type are to have a spigot passing through the opening. The clearance between the spigot and the edge of the opening is to be uniform for the whole periphery of the opening and is not to exceed 1,5 mm.

h) Closing devices of internal type covers, having dimensions not exceeding 180mm x 230mm, may be fitted with a single fastening bolt or stud. Larger closing devices are to be fitted with at least two bolts or studs.

i) Covers are to be designed so as to prevent the dislocation of the required gasket by the internal pressure. Only continuous ring gaskets may be used for packing.

3.2.5 Fittings

a) In general, cocks and valves are to be designed in accordance with the requirements in Ch 1, Sec 10, [2.7.2].

b) Cocks, valves and other fittings are to be connected directly or as close as possible to the boiler shell.

c) Cocks and valves for boilers are to be arranged in such a way that it can be easily seen when they are open or closed and so that their closing is obtained by a clockwise rotation of the actuating mechanism.

3.2.6 Boiler burners

Burners are to be arranged so that they cannot be withdrawn unless the fuel supply to the burners is cut off.

3.2.7 Allowable water levels

a) In general, for water tube boilers the lowest permissible water level is just above the top row of tubes when the water is cold. Where the boiler is designed not to have fully submerged tubes, when the water is cold, the lowest allowable level indicated by the manufacturer is to be indicated on the drawings and submitted to the Society for consideration.

b) For fire tube boilers with combustion chamber integral with the boiler, the minimum allowable level is to be at least 50 mm above the highest part of the combustion chamber.

c) For vertical fire tube boilers the minimum allowable level is 1/2 of the length of the tubes above the lower tube sheet.

3.2.8 Steam outlets

a) Each boiler steam outlet, if not serving safety valves, integral superheaters and other appliances which are to have permanent steam supply during boiler operation, is to be fitted with an isolating valve secured either directly to the boiler shell or to a standpipe of substantial thickness, as short as possible, and secured directly to the boiler shell.

b) The number of auxiliary steam outlets is to be reduced to a minimum for each boiler.

c) Where several boilers supply steam to common mains, the arrangement of valves is to be such that it is possible to positively isolate each boiler for inspection and maintenance. In addition, for water tube boilers, non-return devices are to be fitted on the steam outlets of each boiler.

d) Where steam is used for essential auxiliaries (such as whistles, steam operated steering gears, steam operated electric generators, etc.) and when several boilers are fitted on board, it is to be possible to supply steam to these auxiliaries with any one of these boilers out of operation.

e) Each steam stop valve exceeding 150 mm nominal diameter is to be fitted with a bypass valve.

3.2.9 Feed check valves

a) Each fired boiler supplying steam to essential services is to be fitted with at least two feed check valves connected to two separate feed lines. For unfired steam generators a single feed check valve may be allowed.

b) Feed check valves are to be secured directly to the boiler or to an integral economiser. Water inlets are to be separated. Where, however, feed check valves are secured to an economiser, a single water inlet may be allowed provided that each feed line can be isolated without stopping the supply of feed water to the boiler.

c) Where the economisers may be bypassed and cut off from the boiler, they are to be fitted with pressure-limiting type valves, unless the arrangement is such that excessive pressure cannot occur in the economiser when cut off.

d) Feed check valves are to be fitted with control devices operable from the stokehold floor or from another appropriate location. In addition, for water tube boilers, at least one of the feed check valves is to be arranged so as to permit automatic control of the water level in the boiler.

e) Provision is to be made to prevent the feed water from getting in direct contact with the heated surfaces inside the boiler and to reduce, as far as possible and necessary, the thermal stresses in the walls.

3.2.10 Drains

Each superheater, whether or not integral with the boiler, is to be fitted with cocks or valves so arranged that it is possible to drain it completely.

3.2.11 Water sample

a) Every boiler is to be provided with means to supervise and control the quality of the feed water. Suitable arrangements are to be provided to preclude, as far as practicable, the entry of oil or other contaminants which may adversely affect the boiler.

b) For this purpose, boilers are to be fitted with at least one water sample cock or valve. This device is not to be connected to the water level standpipes.

c) Suitable inlets for water additives are to be provided in each boiler.

3.2.12 Marking of boilers

a) Each boiler is to be fitted with a permanently attached plate made of non-corrosive metal, with indication of the following information, in addition to the identification marks (name of manufacturer, year and serial number):
   - the design pressure
   - the design temperature
   - the test pressure and the date of the test.

b) Markings may be directly stamped on the vessel if this does not produce notches having an adverse influence on its behaviour in service.

c) For lagged vessels, these markings are also to appear on a similar plate fitted above the lagging.

3.3 Thermal oil heaters and thermal oil installation

3.3.1 General

a) The following requirements apply to thermal oil heaters in which organic liquids (thermal oils) are heated by oil fired burners, exhaust gases or electricity to temperatures below their initial boiling point at atmospheric pressure.

b) Thermal oils are only to be used within the limits set by the manufacturer.

c) Means are to be provided for manual operation. During manual operation, the automated functioning of at least the temperature control device on the thermal oil side as well as the flow monitoring is to be maintained.

d) Means are to be provided to take samples of thermal oil.

3.3.2 Thermal oil heater design

a) Heaters are to be so constructed that neither the surfaces nor the thermal oil becomes excessively heated at any point. The flow of the thermal oil is to be ensured by forced circulation.

b) The surfaces which come into contact with the thermal oil are to be designed for the design pressure, subject to the minimum pressure of 1 MPa.

c) Copper and copper alloys are not permitted.

d) Heaters heated by exhaust gas are to be provided with inspection openings at the exhaust gas intake and outlet.

e) Oil fired heaters are to be provided with inspection openings for examination of the combustion chamber. The opening for the burner may be considered as an inspection opening, provided its size is sufficient for this purpose.

f) Heaters are to be fitted with means enabling them to be completely drained.

g) Thermal oil heaters heated by exhaust gas are to be fitted with a permanent system for extinguishing and cooling in the event of fire, for instance a pressure water spraying system.

3.3.3 Safety valves of thermal oil heaters

Each heater is to be equipped with at least one safety valve having a discharge capacity at least equal to the increase in volume of the thermal oil at the maximum heating power. During discharge the pressure may not increase above 10% over the design pressure.

3.3.4 Pressure vessels of thermal oil heaters

The design pressure of all vessels which are part of a thermal oil system, including those open to the atmosphere, is to be taken not less than 0,2 MPa.

3.3.5 Equipment of the expansion, storage and drain tanks

For the equipment to be installed on expansion, storage and drain tanks, see Ch 1, Sec 10, [13].

3.3.6 Marking

Each thermal oil heater and other pressure vessels which are part of a thermal oil installation are to be fitted with a permanently attached plate made of non-corrosive metal, with indication of the following information, in addition to the identification marks (name of manufacturer, year and serial number):

- Heaters
  - maximum allowable heating power
  - design pressure
  - maximum allowable discharge temperature
  - minimum flow rate
  - liquid capacity
- Vessels
  - design pressure
  - design temperature
  - capacity.

3.4 Special types of pressure vessels

3.4.1 Seamless pressure vessels (bottles)

Each bottle is to be marked with the following information:

- name or trade name of the manufacturer
- serial number
- type of gas
- capacity
- test pressure
- empty weight
- test stamp.

3.4.2 Steam condensers

a) The water chambers and steam spaces are to be fitted with doors for inspection and cleaning.

b) Where necessary, suitable diaphragms are to be fitted for supporting tubes.

c) Condenser tubes are to be removable.

d) High speed steam flow, where present, is to be prevented from directly striking the tubes by means of suitable baffles.

e) Suitable precautions are to be taken in order to avoid corrosion on the circulating water side and to provide an efficient grounding.

3.5 Other pressure vessels

3.5.1 Safety valves arrangement

a) General:
   - pressure vessels which are part of a system are to be provided with safety valves, or equivalent devices, if they are liable to be isolated from the system safety devices. This provision is also to be made in all cases in which the vessel pressure can rise, for any reason, above the design pressure
   - in particular, air pressure vessels which can be isolated from the safety valves ensuring their protection in normal service are to be fitted with another safety device, such as a rupture disc or a fusible plug, in order to ensure their discharge in case of fire. This device is to discharge to the open
   - safety devices ensuring protection of pressure vessels in normal service are to be rated to operate before the pressure exceeds the maximum working pressure by more than 5%
   - where two or more pressure vessels are interconnected by a piping system of adequate size so that no branch of piping may be shut off, it is sufficient to provide them with one safety valve and one pressure gauge only.

b) Heat exchangers

Special attention is to be paid to the protection against overpressure of vessels, such as heat exchangers, which have parts that are designed for a pressure which is below that to which they might be subjected in the case of rupture of the tubular bundles or coils contained therein and that have been designed for a higher pressure.

3.5.2 Other requirements

a) Access arrangement

The access requirements for boilers stated in [3.2.4] are also applicable for other pressure vessels.

b) Corrosion protection

Vessels and equipment containing media that might lead to accelerated corrosion are to be suitably protected.

c) Marking:

- each pressure vessel is to be fitted with a permanently attached plate made of non-corrosive metal, with indication of the following information, in addition to the identification marks (name of manufacturer, year and serial number):
  - the design pressure
  - the design temperature
  - the test pressure and the date of the test
- markings may be directly stamped on the vessel if this does not produce notches having an adverse influence on its behaviour in service
- for smaller pressure vessels the indication of the design pressure only may be sufficient.

4 Design and construction - Fabrication and welding

4.1 General

4.1.1 Base materials

a) These requirements apply to boilers and pressure vessels made of steel of weldable quality.

b) Fabrication and welding of vessels made of other materials are to be the subject of special consideration.

4.1.2 Welding

a) Weldings are to be performed in accordance with welding procedures approved by the Society.

b) Manual and semi-automatic welding is to be performed by welders qualified by the Society.

c) The conditions under which the welding procedures, welding equipment and welders operate are to correspond to those specified in the relevant approvals or qualifications.

d) Both ordinary and special electric arc welding processes are covered in the following requirements.

4.1.3 Cutting of plates

a) Plates are to be cut by flame cutting, mechanical machining or a combination of both processes. For plates having a thickness less than 25 mm, cold shearing is admitted provided that the sheared edge is removed by machining or grinding for a distance of at least one quarter of the plate thickness with a minimum of 3 mm.

b) For flame cutting of alloy steel plates, preheating is to be carried out if necessary.

c) The edges of cut plates are to be examined for laminations, cracks or any other defect detrimental to their use.

4.1.4 Forming of plates

a) The forming processes are to be such as not to impair the quality of the material. The Society reserves the right to require the execution of tests to demonstrate the suitability of the processes adopted. Forming by hammering is not allowed.

b) Unless otherwise justified, cold formed shells are to undergo an appropriate heat treatment if the ratio of internal diameter after forming to plate thickness is less than 20. This heat treatment may be carried out after welding.

c) Before or after welding, hot formed plates are to be normalised or subjected to another treatment suitable for their steel grade, if hot forming has not been carried out within an adequate temperature range.

d) Plates which have been previously butt-welded may be formed under the following conditions:

- Hot forming

  After forming, the welded joints are to be subjected to X-ray examination or equivalent. In addition, mechanical tests of a sample weld subjected to the same heat treatment are to be carried out.

- Cold forming

  Cold forming is only allowed for plates having a thickness not exceeding:

  - 20 mm for steels having minimum ultimate tensile strength R_m between 360 N/mm² and 410 N/mm²
  - 15 mm for steels having R_m between 460 N/mm² and 510 N/mm² as well as for steels 0,3Mo, 1Mn0,5Mo, 1Mn0,5MoV and 0,5Cr0,5Mo.

  Cold forming is not allowed for steels 1Cr0,5Mo and 2,25Cr1Mo.
- Weld reinforcements are to be carefully ground smooth prior to forming.
- A proper heat treatment is to be carried out after forming, if the ratio of internal diameter to thickness is less than 36, for steels: 460 N/mm², 510 N/mm², 0,3Mo, 1Mn0,5Mo, 1Mn0,5MoV and 0,5Cr0,5Mo.
- After forming, the joints are to be subjected to X-ray examination or equivalent and to a magnetic particle or liquid penetrant test.
- Refer to Fig 26 for definition of thickness to be taken in account.

4.2 Welding design

4.2.1 Main welded joints

a) All joints of class 1 and 2 pressure parts of boilers and pressure vessels are to be butt-welded, with the exception of welding connecting flat heads or tube sheets to shells, for which partial penetration welds or fillet welds may be accepted.

Fig 26 show examples of acceptable welding for class 1 and 2 pressure vessels.

b) Joints of class 3 pressure vessels are also subject to the requirement in a), however connection of dished heads to shells by lap welds may be accepted. Fig 27 shows some acceptable details of circumferential lap welds for class 3 pressure vessels.

4.2.2 Shell longitudinal and circumferential welds

Longitudinal and circumferential joints are to be welded from both sides of the plate. Welding from one side may be allowed only when there is evidence that the welding process permits a complete penetration and a sound weld root. If a backing strip is used, it is to be removed after welding and prior to any non-destructive examination. However, the backing strip may be retained in circumferential joints of class 2 vessels, having a thickness not exceeding 15 mm, and of class 3 vessels, provided that the material of the backing strip is such as not to adversely affect the weld.

Figure 26 : Example of acceptable joints and thickness to be considered for forming and post-weld heat treatment

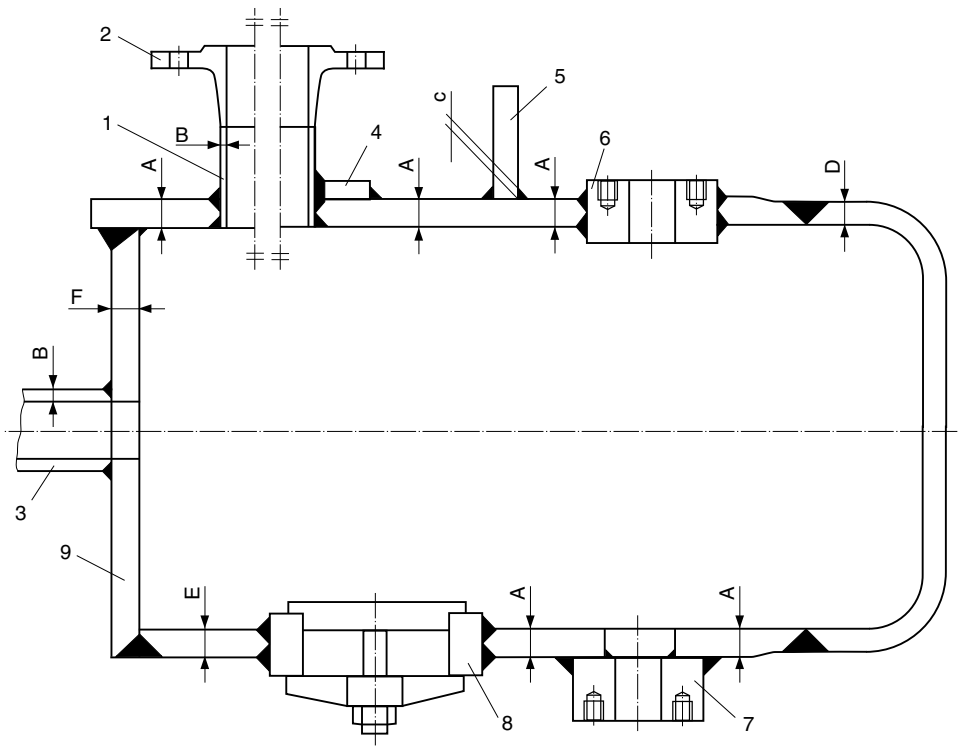

Key

1 : Nozzle (set in); **2** : Flange; **3** : Nozzle (set on); **4** : Reinforcing plate; **5** : Non-pressure part;

6 : Pad (set in); **7** : Pad (set on); **8** : Manhole frame; **9** : Flat plate.

Figure 27 : Example of acceptable lap-joints

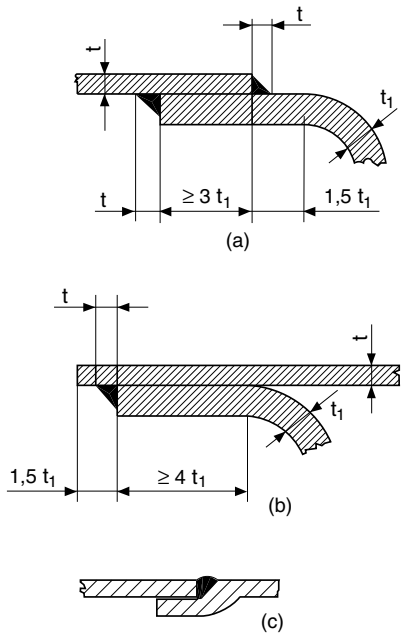

Details (b) and (c) may be used only for pressure vessels having internal diameter less than 600mm.

4.2.3 Plates of unequal thickness

a) If plates of unequal thickness are butt-welded and the difference between thicknesses is more than 3 mm, the thicker plate is to be smoothly tapered for a length equal to at least four times the offset, including the width of the weld. For longitudinal joints the tapering is to be made symmetrically on both sides of the plate in order to obtain alignment of middle lines.

b) If the joint is to undergo radiographic examination, the thickness of the thicker plate is to be reduced to that of the thinner plate next to the joint and for a length of at least 30 mm.

4.2.4 Dished heads

a) For connection of a hemispherical end with a cylindrical shell, the joint is to be arranged in a plane parallel to that of the largest circle perpendicular to the axis of the shell and at such a distance from this plane that the tapering of the shell made as indicated in [2.5.6] is wholly in the hemisphere.

b) For torispherical ends made of parts assembled by welding, no welded joint is normally admitted along a parallel in the knuckle nor at a distance less than 50 mm from the beginning of the knuckle.

4.2.5 Welding location

The location of main welded joints is to be chosen so that these joints are not submitted to appreciable bending stresses.

4.2.6 Accessories and nozzles

a) Attachment of accessories by welds crossing main welds or located near such welds is to be avoided; where this is impracticable, welds for attachment of accessories are to completely cross the main welds rather than stop abruptly on or near them.

b) Openings crossing main joints or located near main joints are also to be avoided as far as possible.

c) Doubling plates for attachment of accessories such as fixing lugs or supports are to be of sufficient size to ensure an adequate distribution of loads on pressure parts; such doubling plates are to have well rounded corners. Attachment of accessories such as ladders and platforms directly on the walls of vessels such that they restrain their free contraction or expansion is to be avoided.

d) Welded connections of nozzles and other fittings, either with or without local compensation, are to be of a suitable type, size and preparation in accordance with the approved plans.

4.2.7 Connections of stays to tube plates

a) Where stays are welded, the cross-sectional area of the weld is to be at least 1,25 times the cross-section of the stay.

b) The cross-sectional area of the end welding of welded stay tubes is to be not less than 1,25 times the cross-sectional area of the stay tube.

4.2.8 Type of weldings

Fig 28, Fig 29, Fig 30, Fig 31, Fig 32, Fig 33, Fig 34, Fig 35, Fig 36 and Fig 37 indicate the type and size of weldings of typical pressure vessel connections. Any alternative type of welding or size is to be the subject of special consideration by the Society.

Figure 28 : Types of joints for unstayed flat heads (1)

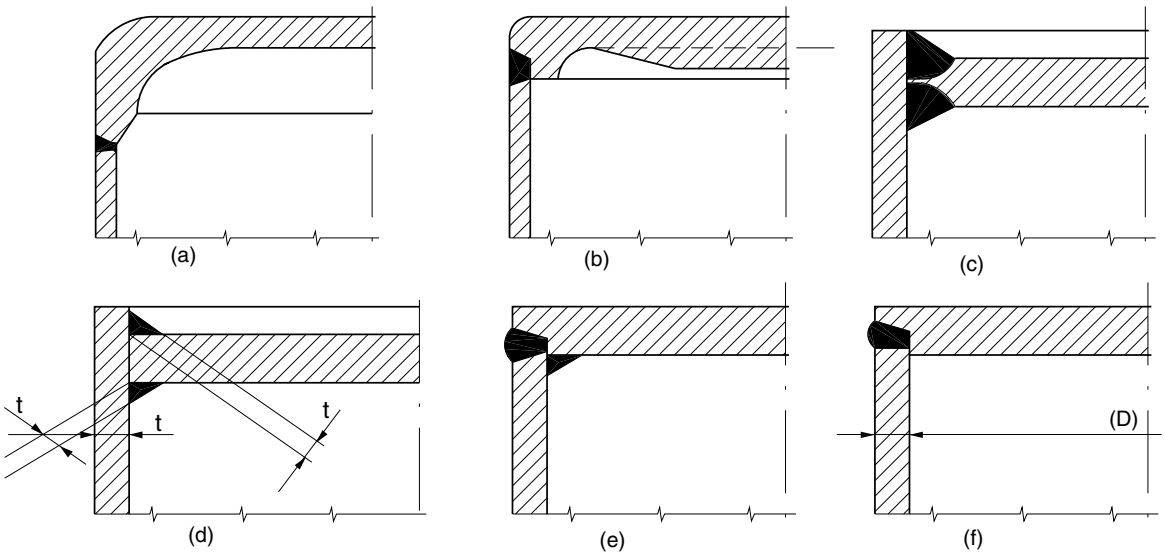

Figure 29 : Types of joints for unstayed flat heads (2)

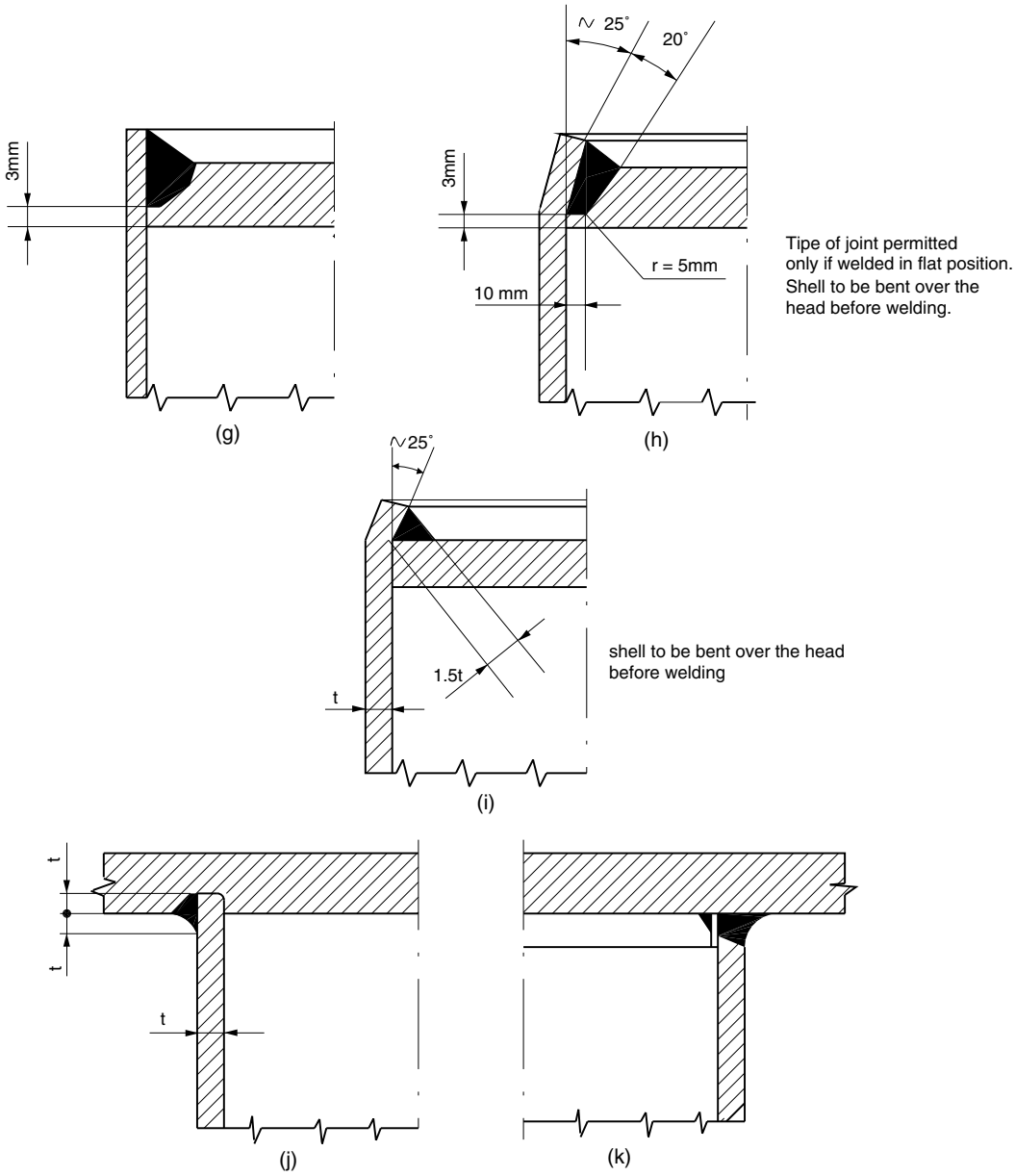

Figure 30 : Types of joints for nozzles and reinforced rings (1)

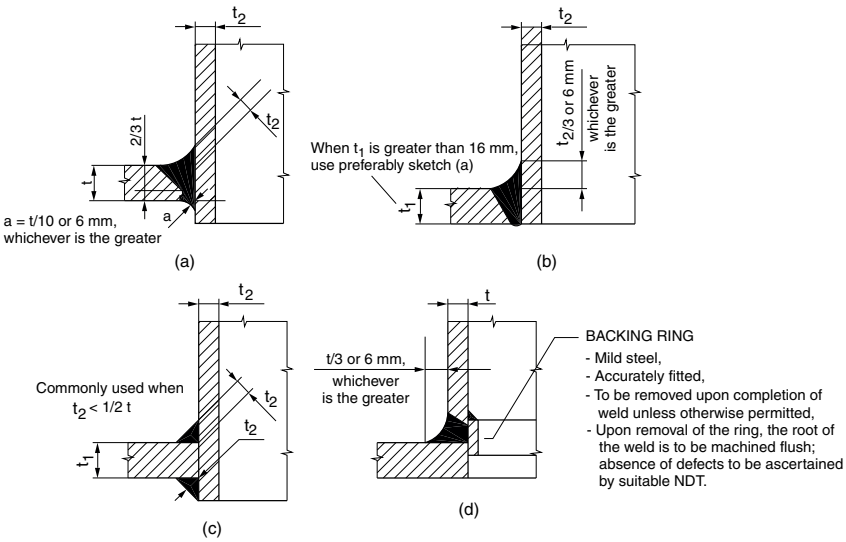

Figure 31 : Types of joints for nozzles and reinforcing rings (2)

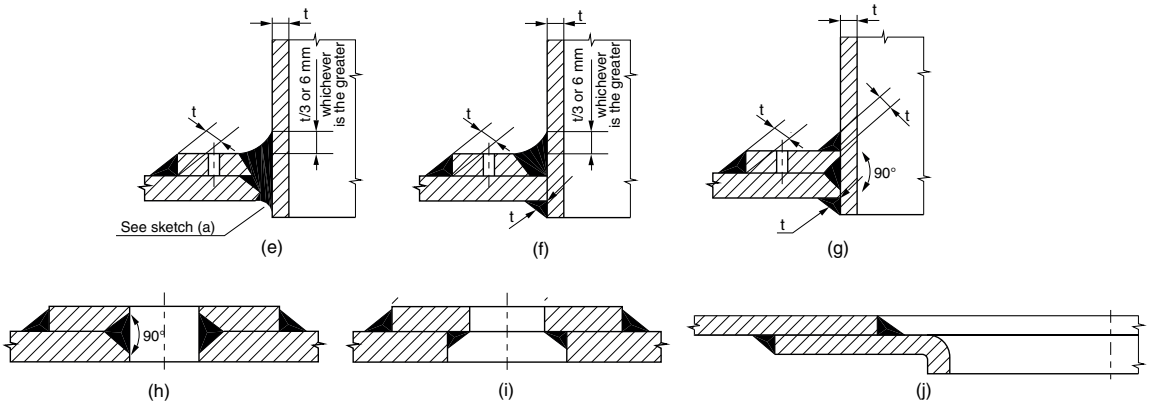

Figure 32 : Types of joints for nozzles and reinforcing rings (3)

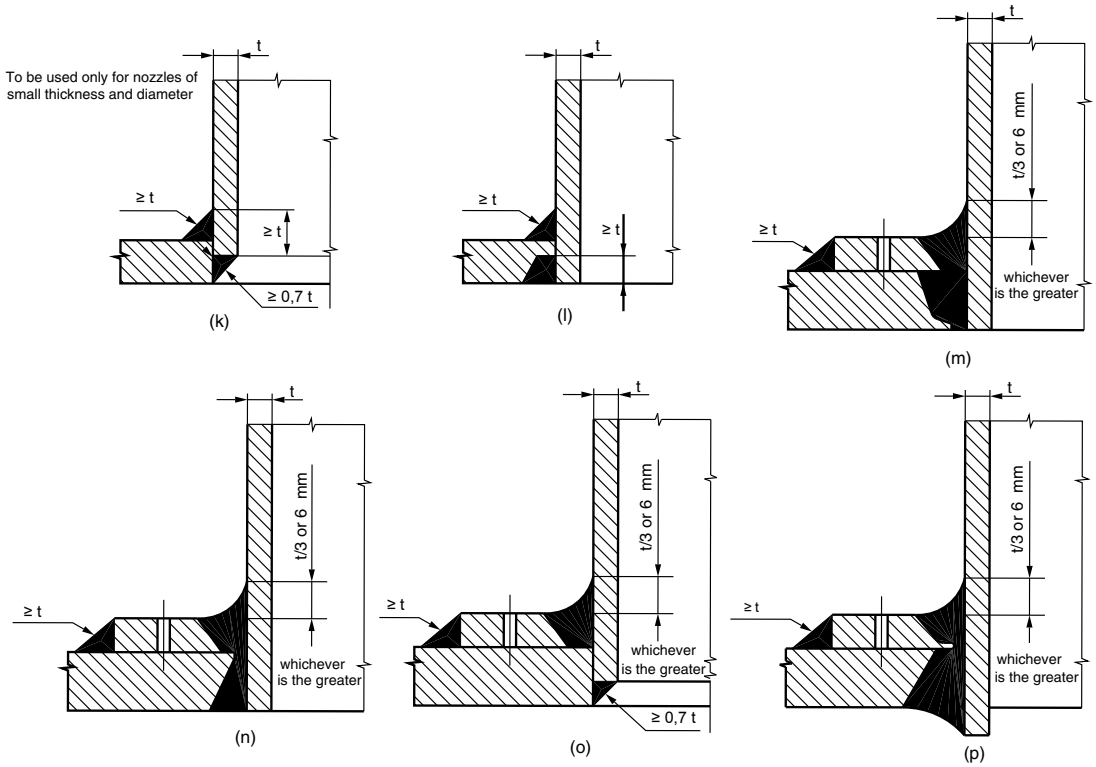

Figure 33 : Types of joints for nozzles (4)

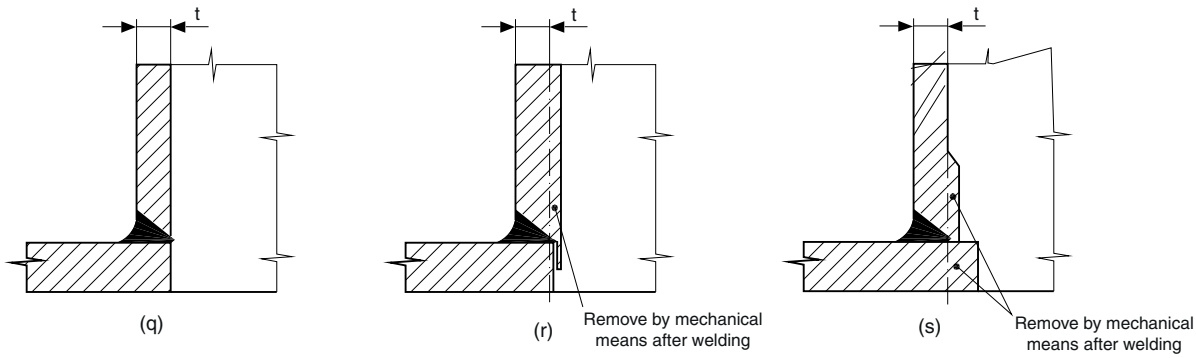

Note: Where preparations of Fig 33 are carried out, the shell is to be carefully inspected to ascertain the absence of lamination.

Figure 34 : Types of joints for flanges to nozzles

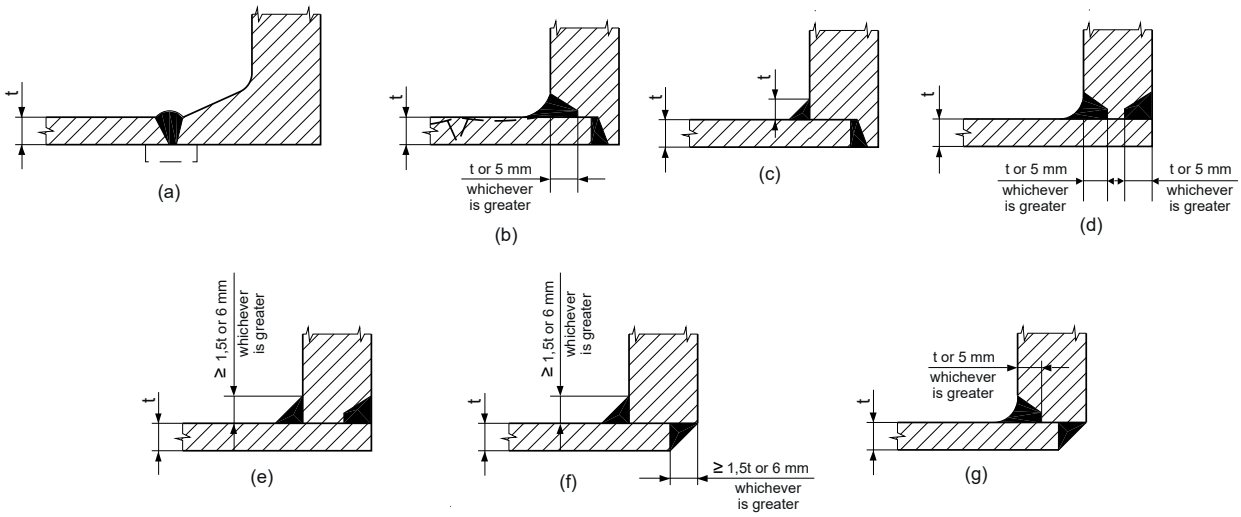

Figure 35 : Types of joints for tubesheets to shell (1)

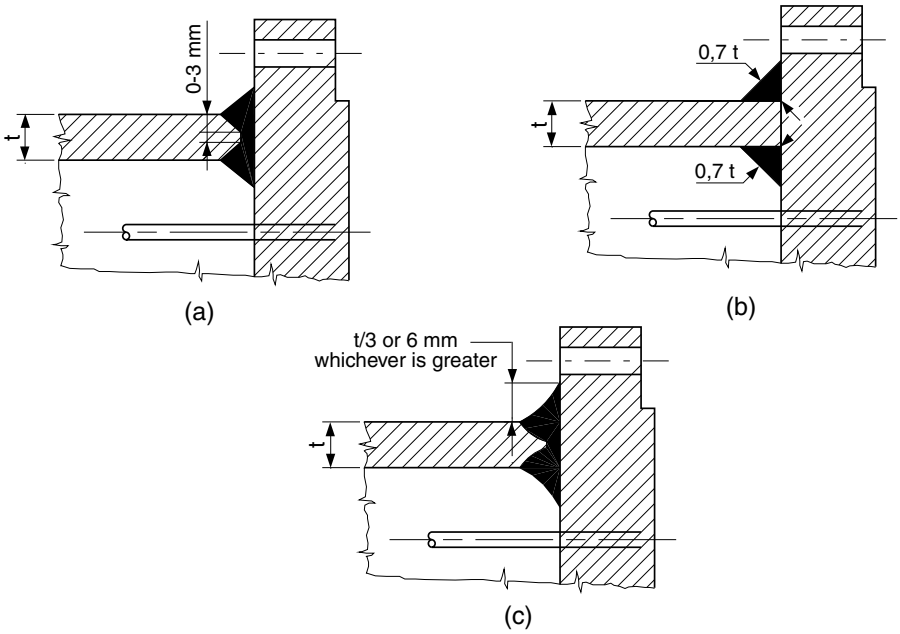

Figure 36 : Types of joints for tubesheets to shells (2)

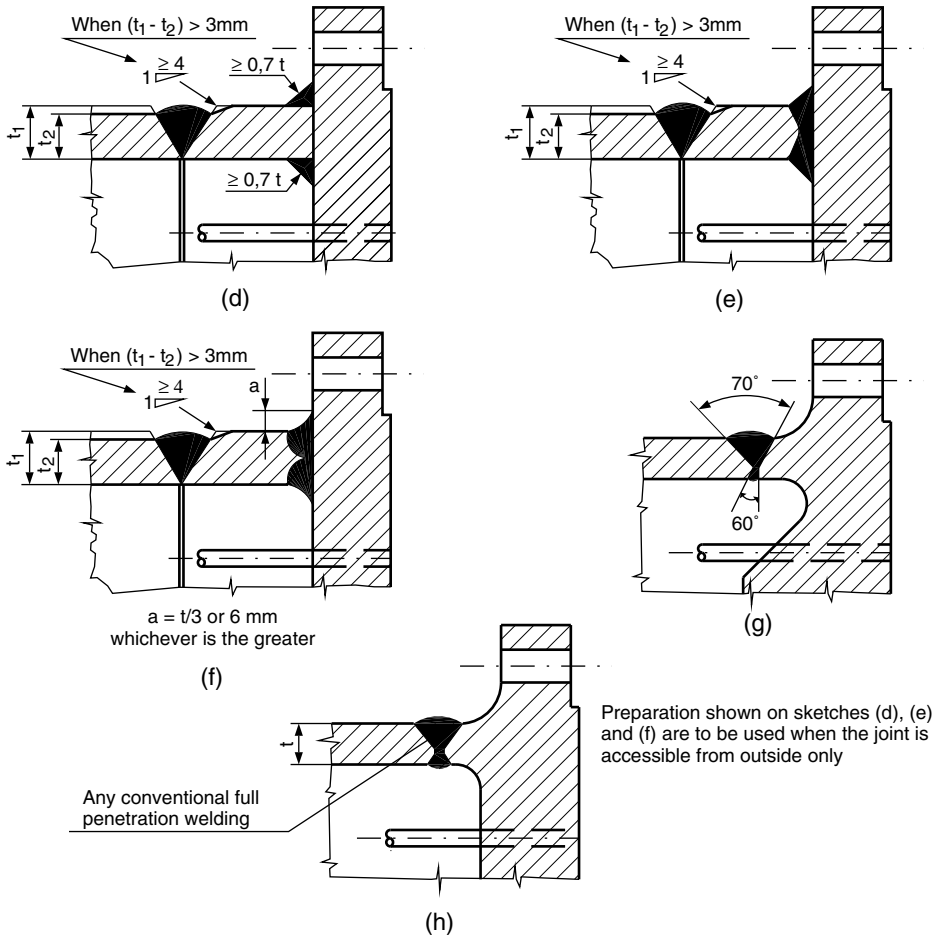

Figure 37 : Type of joints for stays and stay tubes

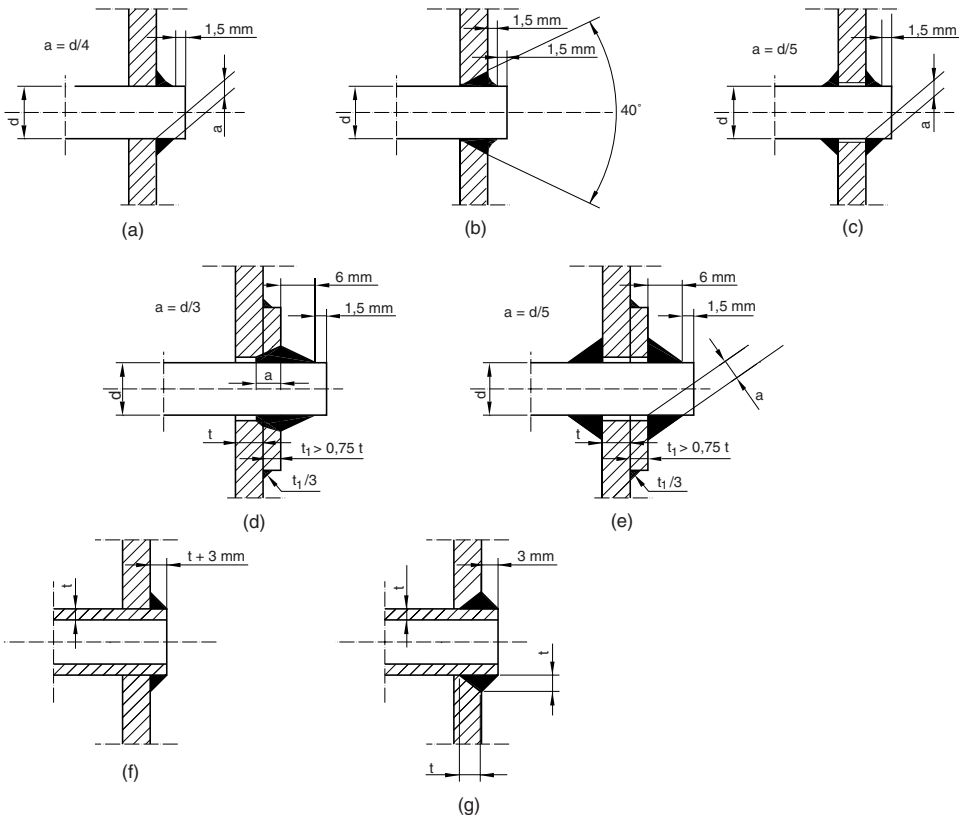

4.3 Miscellaneous requirements for fabrication and welding

4.3.1 Welding position

a) As far as possible, welding is to be carried out in the downhand horizontal position and arrangements are to be foreseen so that this can be applied in the case of circumferential joints.

b) When welding cannot be performed in this position, tests for qualification of the welding process and the welders are to take account thereof.

4.3.2 Cleaning of parts to be welded

a) Parts to be welded are, for a distance of at least 25 mm from the welding edges, to be carefully cleaned in order to remove any foreign matter such as rust, scale, oil, grease and paint.

b) If the weld metal is to be deposited on a previously welded surface, all slag or oxide is to be removed to prevent inclusions.

4.3.3 Protection against adverse weather conditions

a) Welding of pressure vessels is to be done in a sheltered position free from draughts and protected from cold and rain.

b) Unless special justification is provided, no welding is to be performed if the temperature of the base metal is less than 0°C.

4.3.4 Interruption in welding

If, for any reason, welding is stopped, care is to be taken on restarting to obtain a complete fusion.

4.3.5 Backing weld

When a backing weld is foreseen, it is to be carried out after suitable chiseling or chipping at the root of the first weld, unless the welding process applied does not call for such an operation.

4.3.6 Appearance of welded joints

a) Welded joints are to have a smooth surface without under-thickness; their connection with the plate surface is to be gradual without undercutting or similar defects.

b) The weld reinforcement of butt welds, on each side of the plate, is not to exceed the following thickness:
   - 2,5 mm for plates having a thickness not exceeding 12 mm
   - 3 mm for plates having a thickness greater than 12 mm but less than 25 mm
   - 5 mm for plates having a thickness at least equal to 25 mm.

4.4 Preparation of parts to be welded

4.4.1 Preparation of edges for welding

a) Grooves and other preparations of edges for welding are to be made by machining, chipping or grinding. Flame cutting may also be used provided that the zones damaged by this operation are removed by machining, chipping or grinding. For alloy steel plates, preheating is to be provided, if needed, for flame cutting.

b) Edges prepared are to be carefully examined to check that there are no defects detrimental to welding.

4.4.2 Abutting of parts to be welded

a) Abutting of parts to be welded is to be such that surface misalignment of plates does not exceed:
   - 10% of the thickness of the plate with a maximum of 3 mm for longitudinal joints
   - 10% of the thickness of the plate plus 1 mm with a maximum of 4 mm for circumferential joints.

b) For longitudinal joints, middle lines are to be in alignment within 10% of the thickness of the thinner plate with a maximum of 3 mm.

c) Plates to be welded are to be suitably retained in position in order to limit deformation during welding. The arrangements are to be such as to avoid modification of the relative position of parts to be welded and misalignment, after welding, exceeding the limits indicated above.

d) Temporary welds for abutting are to be carried out so that there is no risk of damage to vessel shells. Such welds are to be carefully removed after welding of the vessel and before any heat treatment. Non-destructive testing of the corresponding zones of the shell may be required by the Surveyor if considered necessary.

e) Accessories such as doubling plates, brackets and stiffeners are to be suitable for the surface to which they are to be attached.

4.5 Tolerances after construction

4.5.1 General

The sizes and shape of vessels are to be checked after welding for compliance with the design taking into account the tolerances given below. The Society reserves the right to stipulate smaller values for these tolerances for vessels subjected to special loads.

Any defect in shape is to be gradual and there is to be no flat area in way of welded joints.

Measurements are to be taken on the surface of the parent plate and not on the weld or other raised part.

4.5.2 Straightness

The straightness of cylindrical shells is to be such that their deviation from the straight line does not exceed 0,6% of their length, with a maximum of 15 mm for each 5 m of length.

4.5.3 Out-of-roundness

a) Out-of-roundness of cylindrical shells is to be measured either when set up on end or when laid flat on their sides; in the second case, measures of diameters are to be repeated after turning the shell through 90° about its axis and out-of-roundness is to be calculated from the average of the two measures of each diameter.

b) For any transverse section, the difference between the maximum and minimum diameters is not to exceed 1% of the nominal diameter D with a maximum of:

   (D + 1250) / 200, D being expressed in mm.

   For large pressure vessels, this limit may be increased by a maximum of 0,2% of the internal diameter of the vessel. Any possible out-of-roundness within the above limit is to be gradual and there are to be no localised deformations in way of the welded joints.

4.5.4 Irregularities

Irregularities in profile of cylindrical shells, checked by a 20° gauge, are not to exceed 5% of the thickness of the plate plus 3 mm. This value may be increased by 25% if the length of the irregularity does not exceed one quarter of the distance between two circumferential seams, with a maximum of 1 mm.

4.6 Preheating

4.6.1

a) Preheating, to be effectively maintained during the welding operation, may be required by the Society when deemed necessary in relation to a number of circumstances, such as the type of steel, thickness of the base material, welding procedure and technique, type of restraint, and heat treatment after welding, if any.

b) The preheating temperature is to be determined accordingly. However, a preheating temperature of approximately 150°C is required for 0,5Mo or 1Cr0,5Mo type steel, and approximately 250°C for 2,25Cr1Mo type steel.

c) These requirements also apply to welding of nozzles, fittings, steam pipes and other pipes subject to severe conditions.

4.7 Post-weld heat treatment

4.7.1 General

a) When post-weld heat treatment of a vessel is to be carried out, such treatment is to consist of:
   - heating the vessel slowly and uniformly up to a temperature suitable for the grade of steel
   - maintaining this temperature for a duration determined in relation to the actual thickness t_A of the vessel and the grade of steel
   - slowly cooling the vessel in the furnace down to a temperature not exceeding 400°C, with subsequent cooling allowed out of the furnace in still air.

b) As far as possible, vessels are to be heat treated in a single operation. However, when the sizes of the vessels are such that heat treatment requires several operations, care is to be taken such that all the parts of the vessels undergo heat treatment in a satisfactory manner. In particular, a cylindrical vessel of great length may be treated in sections in a furnace if the overlap of the heated sections is at least 1500 mm and if parts outside the furnace are lagged to limit the temperature gradient to an acceptable value.

4.7.2 Thermal stress relieving

Upon completion of all welding, including connections of nozzles, doublers and fittings, pressure vessels of classes 1 and 2, boilers and associated parts are to be subjected to an effective stress relieving heat treatment in the following cases:

- boilers and steam generators for thicknesses higher than 20 mm or, depending upon the type of steel, for lower thicknesses as required for class 1 pressure vessels.
- pressure vessels of classes 1 and 2 containing fluids at a temperature not less than the ambient temperature, where the thickness exceeds that indicated in Tab 18

Applications at temperatures less than the ambient temperature and/or steels other than those indicated above are to be the subject of special consideration by the Society.

Stress relieving heat treatment is not to be required when the minimum temperature of the fluid is at least 30°C higher than the KV-notch impact test temperature specified for the steel; this difference in temperature is also to be complied with for welded joints (both in heat-affected zones and in weld metal).

Pressure vessels and pipes of class 3 and associated parts are not required to be stress relieved, except in specific cases.

Table 18 : Thermal stress relieving

Grade	Thickness (mm) above which post-weld heat treatment is required	
	Boilers	Unfired pressure vessels
R_m = 360 N/mm² Grade HA R_m = 410 N/mm² Grade HA	14,5	14,5
R_m = 360 N/mm² Grade HB R_m = 410 N/mm² Grade HB	20	30
R_m = 360 N/mm² Grade HD R_m = 410 N/mm² Grade HD	20	38
R_m = 460 N/mm² Grade HB R_m = 510 N/mm² Grade HB	20	25
R_m = 460 N/mm² Grade HD R_m = 510 N/mm² Grade HD	20	35
0,3Mo 1Mn 0,5Mo 1Mn 0,5MoV 0,5Cr 0,5Mo	20	20
1Cr 0,5Mo 2,25Cr 1Mo	ALL	ALL

4.7.3 Heat treatment procedure

The temperature of the furnace at the time of introduction of the vessel is not to exceed 400°C.

a) The heating rate above 400°C is not to exceed:

- 220°C per hour if the maximum thickness is not more than 25 mm, or
- (5500 / t_A)°C per hour, with a minimum of 55°C per hour, if the maximum thickness t_A, in mm, is more than 25 mm

b) The cooling rate in the furnace is not to exceed:

- –280°C per hour if the maximum thickness is not more than 25 mm, or
- –(7000 / t_A)°C per hour, with a minimum of –55°C per hour, if the maximum thickness t_A, in mm, is more than 25 mm.

Unless specially justified, heat treatment temperatures and duration for maintaining these temperatures are to comply with the values in Tab 19.

Table 19 : Heat treatment procedure

Grade	Temperatures	Time per 25 mm of maximum thickness	Minimum time
Carbon steels	580-620°C	1 hour	1 hour
0,3Mo 1Mn 0,5Mo 1Mn 0,5MoV 0,5Cr 0,5Mo	620-660°C	1 hour	1 hour
1Cr 0,5Mo	620-660°C	1hour	2 hours
2,25Cr 1Mo	600-750°C **(1)**	2 hours	2 hours
(1) The temperature is to be chosen, with a tolerance of ± 20°C, in this temperature range in order to obtain the required mechanical characteristics			

4.7.4 Alternatives

When, for special reasons, heat treatment is carried out in conditions other than those given in [4.7.2], all details regarding the proposed treatment are to be submitted to the Society, which reserves the right to require tests or further investigations in order to verify the efficiency of such treatment.

4.7.5 Execution of heat treatment

Furnaces for heat treatments are to be fitted with adequate means for controlling and recording temperature; temperatures are to be measured on the vessel itself. The atmosphere in the furnaces is to be controlled in order to avoid abnormal oxidation of the vessel.

4.7.6 Treatment of test plates

Test plates are normally to be heated at the same time and in the same furnace as the vessel.

When separate heat treatment of test plates cannot be avoided, all precautions are to be taken such that this treatment is carried out in the same way as for the vessel, specifically with regard to the heating rate, the maximum temperature, the duration for maintaining this temperature and the cooling conditions.

4.7.7 Welding after heat treatment

a) Normally, welding after heat treatment is only allowed if:
   - the throat of welding fillets does not exceed 10 mm
   - the largest dimension of openings in the vessel for the accessories concerned does not exceed 50 mm.

b) Any welding of branches, doubling plates and other accessories on boilers and pressure vessels after heat treatment is to be submitted for special examination by the Society.

4.8 Welding samples

4.8.1 Test plates for welded joints

a) Test plates of sufficient size, made of the same grade of steel as the shell plates, are to be fitted at each end of the longitudinal joints of each vessel so that the weld in the test plates is the continuation of these welded joints. There is to be no gap when passing from the deposited metal of the joint to the deposited metal of the test plate.

b) No test plate is required for circumferential joints if these joints are made with the same process as longitudinal joints. Where this is not the case, or if there are only circumferential joints, at least one test plate is to be welded separately using the same welding process as for the circumferential joints, at the same time and with the same welding materials.

c) Test plates are to be stiffened in order to reduce as far as possible warping during welding. The plates are to be straightened prior to their heat treatment which is to be carried out in the same conditions as for the corresponding vessel (see also [4.7.6]).

d) After radiographic examination, the following test pieces are to be taken from the test plates:
   - one test piece for tensile test on welded joint
   - two test pieces for bend test, one direct and one reverse
   - three test pieces for impact test
   - one test piece for macrographic examination.

4.8.2 Mechanical tests of test plates

a) The tensile strength on welded joint is not to be less than the minimum specified tensile strength of the plate.

b) The bend test pieces are to be bent through an angle of 180° over a former of 4 times the thickness of the test piece. There is to be no crack or defect on the outer surface of the test piece exceeding in length 1,5 mm transversely or 3 mm longitudinally. Premature failure at the edges of the test piece is not to lead to rejection. As an alternative, the test pieces may be bent through an angle of 120° over a former of 3 times the thickness of the test piece.

c) The Charpy V-notch impact test is to be made with specimens having the notch alternately located in the centre of the weld or in the heat affected zone (most critical location based on procedure qualification results). For austenitic stainless steel, all notches are to be in the centre of the weld. The impact energy is to be measured at the temperature prescribed for the base material being joined. The average impact energy values are not to be less than the values given in NR216 “Materials and Welding” for the steel grade concerned.

d) The test piece for macrographic examination is to permit the examination of a complete transverse section of the weld. This examination is to demonstrate good penetration without lack of fusion, large inclusions and similar defects. In case of doubt, a micrographic examination of the doubtful zone may be required.

4.8.3 Re-tests

a) If one of the test pieces yields unsatisfactory results, two similar test pieces are to be taken from another test plate.

b) If the results for these new test pieces are satisfactory and if it is proved that the previous results were due to local or accidental defects, the results of the re-tests may be accepted.

4.9 Specific requirements for class 1 vessels

4.9.1 General

The following requirements apply to class 1 pressure vessels, as well as to pressure vessels of other classes whose scantling has been determined using an efficiency of welded joint e greater than 0,90.

4.9.2 Non-destructive testing suppliers

In case of non-destructive testing carried out by an independent company from the manufacturer or shipyard, the independent NDT service supplier has to comply with the requirements set out in NR669 “Requirements for non-destructive testing suppliers”.

4.9.3 Non-destructive tests

a) All longitudinal and circumferential joints of class 1 vessels are to be subject of 100% radiographic or equivalent examination with the following exceptions:
   - for pressure vessels or parts designed to withstand external pressures only, at the Society's discretion, the extent may be reduced up to approximately 30% of the length of the joints. In general, the positions included in the examinations are to include all welding crossings
   - for vessels not intended to contain toxic or dangerous matters, made of carbon steels having thickness below 20 mm when the joints are welded by approved automatic processes at the Society's discretion, the extent may be reduced up to approximately 10% of the length of the joints. In general, the positions included in the examinations are to include all welding crossings
   - for circumferential joints having an external diameter not exceeding 175 mm, at the Society's discretion, the extent may be reduced up to approximately 10% of the total length of the joints.

b) Fillet welds for parts such as doubling plates, branches or stiffeners are to undergo a spot magnetic particle test for at least 10% of their length. If magnetic particle tests cannot be used, it is to be replaced by liquid penetrant test.

c) Welds for which non destructive tests reveal unacceptable defects, such as cracks or areas of incomplete fusion, are to be rewelded and are then to undergo a new non destructive examination

4.9.4 Number of test samples

a) During production, at least one test plate for each 20 m of length (or fraction) of longitudinal weldings is to be tested as per [4.8.2].

b) During production, at least one test plate for each 30 m of length (or fraction) of circumferential welding is to be tested as per [4.8.2].

c) When several vessels made of plates of the same grade of steel, with thicknesses varying by not more than 5 mm, are welded successively, only one test plate may be accepted per each 20 m of length of longitudinal joints (or fraction) and per each 30 m of circumferential welding (or fraction) provided that the welders and the welding process are the same. The thickness of the test plates is to be the greatest thickness used for these vessels.

4.10 Specific requirements for class 2 vessels

4.10.1 General

For vessels whose scantlings have been determined using an efficiency of welded joint e greater than 0,90, see [4.9.1].

4.10.2 Non-destructive tests

All longitudinal and circumferential joints of class 2 vessels are to be subjected to radiographic or equivalent examination to an extent of 10% of each weld length. This examination is to cover all the junctions between welds.

This extension may be increased at the Society's discretion depending on the actual thickness of the welded plates.

For actual thickness ≤ 15 mm, this examination can be omitted. In this case, the value of the efficiency should be as indicated in Tab 11.

4.10.3 Number of test samples

In general, the same requirements of [4.9.4] apply also to class 2 pressure vessels. However, test plates are required for each 50 m of longitudinal and circumferential weldings (or fraction).

4.11 Specific requirements for class 3 vessels

4.11.1 For vessels whose scantlings have been determined using an efficiency of welded joint e greater than 0,90, see [4.9.1].

Heat treatment, mechanical tests and non-destructive tests are not required for welded joints of other class 3 vessels.

5 Design and construction - Control and monitoring

5.1 Boiler control and monitoring system

5.1.1 Local control and monitoring

Means to effectively operate, control and monitor the operation of oil fired boilers and their associated auxiliaries are to be provided locally. The functional condition of the fuel, feed water and steam systems and the boiler operational status are to be indicated by pressure gauges, temperature indicators, flow-meter, lights or other similar devices.

5.1.2 Emergency shut-off

Means are to be provided to shut down boiler forced draft or induced draft fans and fuel oil service pumps from outside the space where they are located, in the event that a fire in that space makes their local shut-off impossible.

5.1.3 Water level indicators

a) Each boiler is to be fitted with at least two separate means for indicating the water level. One of these means is to be a level indicator with transparent element. The other may be either an additional level indicator with transparent element or an equivalent device. Level indicators are to be of an approved type.

b) The transparent element of level indicators is to be made of glass, mica or other appropriate material.

c) Level indicators are to be located so that the water level is readily visible at all times. The lower part of the transparent element is not to be below the safety water level defined by the builder.

d) Level indicators are to be fitted either with normally closed isolating cocks, operable from a position free from any danger in case of rupture of the transparent element or with self-closing valves restricting the steam release in case of rupture of this element.

5.1.4 Water level indicators - Special requirements for water tube boilers

a) For water tube boilers having an athwarships steam drum more than 4 m in length, a level indicator is to be fitted at each end of the drum.

b) Water tube boilers serving turbine propulsion machinery are to be fitted with a high-water-level audible and visual alarm (see also Tab 21).

5.1.5 Water level indicators - Special requirements for fire tube boilers (vertical and cylindrical boilers)

a) For cylindrical boilers, the two water level indicators mentioned in [5.1.3] are to be distributed at each end of the boiler; i.e. double front cylindrical boilers are to have two level indicators on each front.

b) A system of at least two suitably located and remote controlled gauge-cocks may be considered as the equivalent device mentioned in [5.1.3] for cylindrical boilers having a design pressure lower than 1 MPa, for cylindrical boilers having a diameter lower than 2 m and for vertical boilers having height lower than 2,3 m. Gauge-cocks are to be fixed directly on the boiler shell.

c) Where level indicators are not fixed directly on the boiler shell, but on level pillars, the internal diameter of such pillars is not to be less than the value d_N given in Tab 20. Level pillars are to be either fixed directly on the boiler shell or connected to the boiler by pipes fitted with cocks secured directly to the boiler shell. The internal diameter of these pipes d_C is not to be less than the values given in Tab 20. The upper part of these pipes is to be arranged so that there is no bend where condense water can accumulate. These pipes are not to pass through smoke boxes or uptakes unless they are located inside metallic ducts having internal diameter exceeding by not less than 100 mm the external diameter of the pipes. Fig 38 shows the sketch of a level pillar arrangement.

Table 20 : Minimum internal diameters d_N and d_C

Internal diameter of the boiler	d_N (mm)	d_C (mm)
D > 3 m	60	38
2,30 m ≤ D ≤ 3 m	50	32
D < 2,30 m	45	26

Figure 38 : Level pillar arrangement

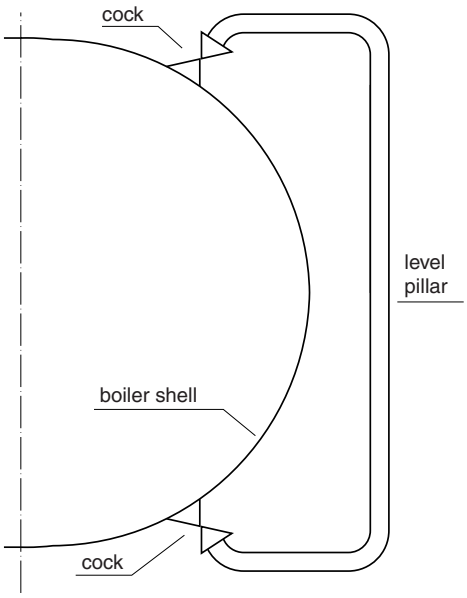

5.1.6 Pressure control devices

a) Each boiler is to be fitted with a steam pressure gauge so arranged that its indications are easily visible from the stokehold floor. A steam pressure gauge is also to be provided for superheaters which can be shut off from the boiler they serve.

b) Pressure gauges are to be graduated in units of effective pressure and are to include a prominent legible mark for the pressure that is not to be exceeded in normal service.

c) Each pressure gauge is to be fitted with an isolating cock.

d) Double front boilers are to have a steam pressure gauge arranged in each front.

5.1.7 Temperature control devices

Each boiler fitted with a superheater is to have an indicator or recorder for the steam temperature at the superheater outlet.

5.1.8 Automatic shut-off of oil fired propulsion and auxiliary boilers

a) Each burner is to be fitted with a flame scanner designed to automatically shut off the fuel supply to the burner in the event of flame failure. In the case of failure of the flame scanner, the fuel to the burner is to be shut off automatically.

b) A low water condition is to automatically shut off the fuel supply to the burners. The shut-off is to operate before the water level reaches a level so low as to affect the safety of the boiler and no longer be visible in the gauge glass. Means are to be provided to minimise the risk of shut-off provoked by the effect of roll and pitch and/or transients. This shut-off system need not be installed in auxiliary boilers which are under local supervision and are not intended for automatic operation.

c) Forced draft failure is to automatically shut off the fuel supply to the burners.

d) Loss of boiler control power is to automatically shut off the fuel supply to the burners.

5.1.9 Alarms

Any actuation of the fuel-oil shut-off listed in [5.1.8] is to operate a visual and audible alarm.

5.1.10 Additional requirements for boilers fitted with automatic control systems

a) The flame scanner required in [5.1.8], item a) is to operate within 6 seconds from the flame failure.

b) A timed boiler purge with all air registers open is to be initiated manually or automatically when boilers are fitted with an automatic ignition system. The purge time is based on a minimum of 4 air changes of the combustion chamber and furnace passes. Forced draft fans are to be operating and air registers and dampers are to be open before the purge time commences.

c) Means are to be provided to bypass the flame scanner control system temporarily during a trial-for-ignition for a period of 15 seconds from the time the fuel reaches the burners. Except for this trial-for-ignition period, no means are to be provided to bypass one or more of the burner flame scanner systems unless the boiler is locally controlled.

d) Where boilers are fitted with an automatic ignition system, and where residual fuel oil is used, means are to be provided for lighting of burners with igniters lighting properly heated residual fuel oil. In the case of flame failure, the burner is to be brought back into automatic service only in the low-firing position.

e) An alarm is to be activated whenever a burner operates outside the limit conditions stated by the manufacturer.

f) Immediately after normal shutdown, an automatic purge of the boiler equal to the volume and duration of the pre-purge is to occur. Following automatic fuel valve shut-off, the air flow to the boiler is not to automatically increase; post-purge in such cases is to be carried out under manual control.

g) Propulsion and auxiliary boilers associated with propulsion machinery intended for centralised, unattended operations are to comply with the requirements of Part C, Chapter 3.

5.2 Pressure vessel instrumentation

5.2.1

a) Pressure vessels are to be fitted with the necessary devices for checking pressure, temperature and level, where it is deemed necessary.

b) In particular, each air pressure vessel is to be fitted with a local manometer.

5.3 Thermal oil heater control and monitoring

5.3.1 Local control and monitoring

Suitable means to effectively operate, control and monitor the operation of thermal oil heaters and their associated auxiliaries are to be provided locally. The functional condition of the fuel, thermal oil circulation, forced draft and flue gas systems is to be indicated by pressure gauges, temperature indicators, flow-meter, lights or other similar devices.

5.3.2 Flow control and monitoring

a) A flow indicator of the thermal oil is to be provided.

b) The flow detection is to be representative of the flow in each heated element.

c) The flow detection is not to be based on a measurement of the pressure-drop through the heating element.

d) Oil fired or exhaust gas heaters are to be provided with a flow monitor limit-switch. If the flow rate falls below a minimum value the firing system is to be switched off and interlocked.

5.3.3 Leakage monitoring

Oil tanks are to be equipped with a leakage detector which, when actuated, shuts down and interlocks the thermal oil firing system. If the oil fired heater is on stand-by, the starting of the burner is to be blocked if the leakage detector is actuated.

5.4 Control and monitoring requirements

5.4.1 Tab 21, Tab 22, Tab 23 and Tab 24 summarise the control and monitoring requirements for main propulsion boilers, auxiliary boilers, oil fired thermal oil heaters and exhaust gas thermal oil heaters and incinerators, respectively.

Table 21 : Main propulsion boilers

Symbol convention H = High, HH = High high, G = group alarm L = Low, LL = Low low, I = individual alarm X = function is required, R = remote	Monitoring		Automatic control				
			Boiler			Auxiliary	
Identification of system parameter	Alarm	Indication	Slow-down	Shut-down	Control	Stand by Start	Stop
Fuel oil							
• Fuel oil delivery pressure or flow	L						
• Fuel oil temperature after heater or viscosity fault	L+H	local					
• Master fuel oil valve position (open / close)		local					
• Fuel oil input burner valve position (open / close)		local					
Combustion							
• Flame failure of each burner	X						
• Failure of atomizing fluid	X					5	
• Boiler casing and economizer outlet smoke temperature (in order to detect possible fire out-break)	H						
	HH			X			
Air							
• Air register position		local					
General steam							
• Superheated steam pressure	L+H	local					
					X		
• Superheated steam temperature	H	local					
• Lifting of safety valve (or equivalent: high pressure alarm for instance)	X						
• Water level inside the drum of each boiler	L+H	local **(1)**					
	LL			X			
					X		
(1) Duplication of level indicator is required							

Table 22 : Auxiliary boilers

Symbol convention H = High, HH = High high, G = group alarm L = Low, LL = Low low, I = individual alarm X = function is required, R = remote	Monitoring		Automatic control				
			Boiler			Auxiliary	
Identification of system parameter	Alarm	Indication	Slow-down	Shut-down	Control	Stand by Start	Stop
Water level	L+H	local					
	LL			X			
Circulation stopped (when forced circulation boiler)	X			X			
Fuel oil temperature or viscosity **(2)**	L+H	local					
Flame failure	X			X			
Temperature in boiler casing (Fire)	H						
Steam pressure	H **(1)**	local		X			

(1) When the automatic control does not cover the entire load range from zero load
(2) Where heavy fuel is used

Table 23 : Thermal oil system

Symbol convention H = High, HH = High high, G = group alarm L = Low, LL = Low low, I = individual alarm X = function is required, R = remote	Monitoring		Automatic control				
			System			Auxiliary	
Identification of system parameter	Alarm	Indication	Slow-down	Shut-down	Control	Stand by Start	Stop
Thermal fluid temperature heater outlet	H	local		X **(1)**			
Thermal fluid pressure pump discharge	H	local		X			
Thermal fluid flow through heating element	L LL	local		X **(1)**			
Expansion tank level	L LL	local		X **(2)**			
Expansion tank temperature	H						
Forced draft fan stopped	X			X			
Heavy fuel oil temperature or viscosity	H+L	local					
Burner flame failure	X			X			
Flue gas temperature heater outlet	H HH			X **(2)**			

(1) Shut-off of heat input only. It applies also when the thermal oil system is in manual operation.
(2) Stop of fluid flow and shut-off of heat input

Table 24 : Incinerators

Symbol convention H = High, HH = High high, G = group alarm L = Low, LL = Low low, I = individual alarm X = function is required, R = remote	Monitoring		Automatic control				
			Incinerator			Auxiliary	
Identification of system parameter	Alarm	Indication	Slow-down	Shut-down	Control	Stand by Start	Stop
Flame failure	X			X			
Furnace temperature	H			X			
Exhaust gas temperature	H						
Fuel oil pressure		local					
Fuel oil temperature or viscosity **(1)**	H+L	local					

(1) Where heavy fuel is used

6 Additional requirements for shell type exhaust gas heated economizers that may be isolated from the steam plant system

6.1 Application

6.1.1 The requirements in [6] are applicable to shell type exhaust gas heated economizers that are intended to be operated in a flooded condition and that may be isolated from the steam plant system.

6.2 Design and construction

6.2.1 Design and construction of shell type economizers are to pay particular attention to the welding, heat treatment and inspection arrangements at the tube plate connection to the shell.

6.3 Pressure relief

6.3.1 Where a shell type economizer is capable of being isolated from the steam plant system, it is to be provided with at least one safety valve, and when it has a total heating surface of 50 m^2 or more, it is to be provided with at least two safety valves in accordance with [3.2].

6.3.2 To avoid the accumulation of condensate on the outlet side of safety valves, the discharge pipes and/or safety valve housings are to be fitted with drainage arrangements from the lowest part, directed with continuous fall to a position clear of the economizer where it will not pose threats to either personnel or machinery. No valves or cocks are to be fitted in the drainage arrangements.

6.3.3 Full details of the proposed arrangements to satisfy [6.3.1] to [6.3.2] are to be submitted for approval.

6.4 Pressure indication

6.4.1 Every shell type economizer is to be provided with a means of indicating the internal pressure. A means of indicating the internal pressure is to be located so that the pressure can be easily read from any position from which the pressure may be controlled.

6.5 Lagging

6.5.1 Every shell type economizer is to be provided with removable lagging at the circumference of the tube end plates to enable ultrasonic examination of the tube plate to shell connection.

6.6 Feed water

6.6.1 Every economizer is to be provided with arrangements for pre-heating and de-aeration, addition of water treatment or combination thereof to control the quality of feed water to within the manufacturer's recommendations.

6.7 Operating instructions

6.7.1 The manufacturer is to provide operating instructions for each economiser which is to include reference to:

- Feed water treatment and sampling arrangements
- Operating temperatures – exhaust gas and feed water temperatures
- Operating pressure
- Inspection and cleaning procedures
- Records of maintenance and inspection
- The need to maintain adequate water flow through the economizer under all operating conditions
- Periodical operational checks of the safety devices to be carried out by the operating personnel and to be documented accordingly
- Procedures for using the exhaust gas economizer in the dry condition
- Procedures for maintenance and overhaul of safety valves.

7 Design requirements for boil-off gas combustion units

7.1 Operating cases

7.1.1 Gas combustion units are to be capable of operating at least in the following conditions:

a) for gas carriers:
- normal boil-off handling in laden conditions
- reduced boil-off handling in ballast conditions
- during inerting and purging operations.

b) for gas-fuelled ships:
- boil-off handling during periods of slow steaming and/or no consumption from propulsion or other services of the ship
- during LNG bunkering, inerting and purging operations.

7.2 Availability

7.2.1 Main components of the GCU(s):
- mechanical non-static components such as fans,
- electronic cards pertaining to the control and monitoring system,

are to be duplicated so that the nominal capacity of the GCU(s) can be sustained or restored in case of single failure of such components.

7.2.2 The time necessary to restore the GCU operation in case of a component failure is to be consistent with the expected operating profile of the GCU and with the increase rate of the pressure in the tanks. In this respect, spare components ready for installation in a short time may be considered in lieu of duplicated components.

7.3 Gas combustion equipment

7.3.1 General

The gas combustion unit is to exhibit no visible flame.

7.3.2 Flue gas temperature

The flue gas temperature at the GCU outlet, after possible dilution, is not to exceed 535°C.

Note 1: The attention is drawn to certain national or international rules that may impose different temperature limits.

In case of emergency shut-down of the GCU, the flue gas temperature is not to exceed the aforementioned value. Otherwise, an emergency water cooling system is to be provided.

7.3.3 Combustion chamber

The combustion chamber is to be of suitable form such as not to present pockets where gas may accumulate.

The flame length is to remain within the gas combustion chamber in all expected operating cases, irrespective of the gas composition and gas pressure.

The combustion chamber is to be fitted with at least two flame monitoring devices, one for the alarm activation and one to shut off the gas supply in the case of flame failure.

7.3.4 Means for ignition

Each gas burner is to be fitted with at least two means for ignition, such as electrical igniters or pilot burners supplied with oil fuel.

7.4 Gas supply

7.4.1 Gas piping system

The gas piping system fitted to the GCU is to comply with the relevant provisions of IGC Code, Chapter 16 or IGF Code, Section 9, as appropriate.

7.4.2 Inerting

Provisions are to be made for inerting and gas-freeing the portion of the gas piping system located in the GCU compartment.

Note 1: Where it is demonstrated that the natural gas-freeing of the GCU burner and of its gas supply piping is efficient, the connection to the inert gas system may be omitted, subject to the flag authorities agreement.

7.5 Instrumentation and safeties

7.5.1 The GCU control system as well as the related systems are to be of a type approved by the Society.

7.5.2 The alarm and safety systems are to be provided in accordance with Tab 25.

Table 25 : Gas combustion units alarm and safety systems

Symbol convention H = High, HH = High high, G = group alarm L = Low, LL = Low low, I = individual alarm X = function is required, R = remote	Monitoring	Automatic safety actions		
Identification of system parameter	Alarms	Automatic shut down of the GCU	Activation of the master gas valve	Other automatic actions
Gas supply - pressure	L	X		
Gas supply - temperature	L+H	X		
Combustion fans, dilution fans or combined fans - failure	X			Start of the stand-by fan
Flame - loss	X	X		
Flame monitoring device - failure	X			
Flue gas at the stack outlet - temperature	H HH	X		
GCU stop from any cause	X			Activation of the block-and-bleed valves **(1)**
Control power supply - failure	X			
Double wall gas piping system **(2)** - gas leakage	X	X	X	
Double wall gas piping system **(2)** - lost of exhaust ventilation	X	X	X	
Single wall gas piping system - gas detection in the GCU space **(3)**	X	X	X	De-energization of the non-safe electrical equipment
Single wall gas piping system - loss of ventilation in the GCU space **(3)**	X	X	X	De-energization of the non-safe electrical equipment
(1) For gas carriers and gas-fuelled ships. Refer to IGC Code, reg. 16.4.5 or IGF Code, reg. 9.4.4 as applicable **(2)** For gas carriers and gas-fuelled ships. Refer to IGC Code, reg. 16.4.6.3 or IGF Code, Table 1, as applicable **(3)** Only for gas-fuelled ships. Refer to IGF Code, reg. 5.6.3.3 and Table 1				

8 Arrangement and installation

8.1 Foundations

8.1.1 For boilers and pressure vessels bolting down to their foundations, see Ch 1, Sec 1, [3.3.1]. Where necessary, they are also to be secured to the adjacent hull structures by suitable ties.

Where chocks are required to be fitted between the boilers and their foundations, they are to be of cast iron or steel.

8.2 Boilers

8.2.1 Thermal expansion

Means are to be provided to compensate thermal expansion of boilers.

8.2.2 Minimum distance of boilers from vertical bulkheads and fuel tanks

a) The distance between boilers and vertical bulkheads is to be not less than the minimum distance necessary to provide access for inspection and maintenance of the structure adjacent to the boiler.

b) In addition to the requirement in a), the distance of boilers from fuel oil tanks is to be such as to prevent the possibility that the temperature of the tank bulkhead may approach the flash point of the oil.

c) In any event, the distance between a boiler and a vertical bulkhead is not to be less than 450 mm.

8.2.3 Minimum distance of boilers from double bottom

a) Where double bottoms in way of boilers may be used to carry fuel oil, the distance between the top of the double bottom and the lower metal parts of the boilers is not to be less than:
   - 600 mm, for cylindrical boilers
   - 750 mm, for water tube boilers.

b) The minimum distance of vertical tube boilers from double bottoms not intended to carry oil may be 200 mm.

8.2.4 Minimum distance of boilers from ceilings

a) A space sufficient for adequate heat dissipation is to be provided on the top of boilers.

b) Oil tanks are not permitted to be installed in spaces above boilers.

8.2.5 Installation of boilers on engine room flats

Where boilers are installed on an engine room flat and are not separated from the remaining space by means of a watertight bulkhead, a coaming of at least 200 mm in height is to be provided on the flat. The area surrounded by the coaming may be drained into the bilge.

8.2.6 Drip trays and gutterways

Boilers are to be fitted with drip trays and gutterways in way of burners so arranged as to prevent spilling of oil into the bilge.

8.2.7 Hot surfaces

Hot surfaces with which the crew are likely to come into contact during operation are to be suitably guarded or insulated. See Ch 1, Sec 1, [3.7.1].

8.2.8 Registers fitted in the smoke stacks of oil fired boilers

Where registers are fitted in smoke stacks, they are not to obstruct more than two thirds of the cross-sectional area of gas passage when closed. In addition, they are to be provided with means for locking them in open position when the boiler is in operation and for indicating their position and degree of opening.

8.3 Pressure vessels

8.3.1 Safety devices on multiple pressure vessels

Where two or more pressure vessels are interconnected by a piping system of adequate size so that no branch of piping may be shut off, it is sufficient to provide them with one safety valve and one pressure gauge only.

8.4 Thermal oil heaters

8.4.1 In general, the requirements of [8.2] for boilers are also applicable to thermal oil heaters.

9 Material test, workshop inspection and testing, certification

9.1 Material testing

9.1.1 General

Materials, including welding consumables, for the constructions of boilers and pressure vessels are to be certified by the material manufacturer in accordance with the appropriate material specification.

9.1.2 Boilers, other steam generators, and oil fired and exhaust gas thermal oil heaters

In addition to the requirement in [9.1.1], testing of materials intended for the construction of pressure parts of boilers, other steam generators, oil fired thermal oil heaters and exhaust gas thermal oil heaters is to be witnessed by the Surveyor.

9.1.3 Class 1 pressure vessels and heat exchangers

In addition to the requirement in [9.1.1], testing of materials intended for the construction of class 1 pressure parts of pressure vessels and heat exchangers is to be witnessed by the Surveyor.

This requirement may be waived at the Society's discretion for mass produced small pressure vessels (such as accumulators for valve controls, gas bottles, etc.). Work (W) certificates are to be provided.

9.2 Workshop inspections

9.2.1 Boilers and individually produced class 1 and 2 pressure vessels

The construction, fitting and testing of boilers and individually produced class 1 and 2 pressure vessels are to be attended by the Surveyor, at the builder's facility.

9.2.2 Mass produced pressure vessels

Construction of mass produced pressure vessels which are type approved by the Society need not be attended by the Surveyor. Work (W) certificates are to be provided.

9.3 Hydrostatic tests

9.3.1 General

Hydrostatic tests of all class 1, 2 and 3 pressure vessels are to be witnessed by the Surveyor with the exception of mass produced pressure vessels which are built under the conditions stated in [9.2.2], and for which work (W) certificates are to be provided.

9.3.2 Testing pressure

a) Upon completion, pressure parts of boilers and pressure vessels are to be subjected to a hydraulic test under a pressure p_t defined below as a function of the design pressure p:

- $p_t = 1,5\ p$ where $p \le 4$ MPa
- $p_t = 1,4\ p + 0,4$ where $4\ \text{MPa} < p \le 25$ Mpa
- $P_t = p + 10,4$ where $p > 25$ MPa

b) The test pressure may be determined as a function of a pressure lower than p; however, in such case, the setting and characteristics of the safety valves and other overpressure protective devices are also to be determined and blocked as a function of this lower pressure.

c) If the design temperature exceeds 300°C, the test pressure p_t is to be as determined by the following formula:

$$p_t = 1,5 \cdot \frac{K_{100}}{K} \cdot p$$

where:

p : Design pressure, in MPa

K_{100} : Permissible stress at 100°C, in N/mm²

K : Permissible stress at the design temperature, in N/mm².

d) Consideration is to be given to the reduction of the test pressure below the values stated above where it is necessary to avoid excessive stress. In any event, the general membrane stress is not to exceed 90% of the yield stress at the test temperature.

e) Economisers which cannot be shut off from the boiler in any working condition are to be submitted to a hydraulic test under the same conditions as the boilers.

f) Economisers which can be shut off from the boiler are to be submitted to a hydraulic test at a pressure determined as a function of their actual design pressure p.

9.3.3 Hydraulic test of boiler and pressure vessel accessories

a) Boilers and pressure vessel accessories are to be tested at a pressure p_t which is not less than 1,5 times the design pressure p of the vessels to which they are attached.

b) The test pressure may be determined as a function of a pressure lower than p; however, in such case, the setting and characteristics of the safety valves and other overpressure protective devices are also to be determined and blocked as a function of this lower pressure.

9.3.4 Hydraulic test procedure

a) The hydraulic test specified in [9.3.1] is to be carried out after all openings have been cut out and after execution of all welding work and of the heat treatment, if any. The vessel to be tested is to be presented without lagging, paint or any other lining and the pressure is to be maintained long enough for the Surveyor to proceed with a complete examination.

b) Hydraulic tests of boilers are to be carried out either after installation on board, or at the manufacturer's plant. Where a boiler is hydrotested before installation on board, the Surveyor may, if deemed necessary, request to proceed with a second hydraulic test on board under a pressure at least equal to 1,1 p. For this test, the boiler may be fitted with its lagging. However, the Surveyor may require this lagging to be partially or entirely removed as necessary.

c) For water tube boilers, the hydraulic test may also be carried out separately for different parts of the boiler upon their completion and after heat treatment. For drums and headers, this test may be carried out before drilling the tube holes, but after welding of all appendices and heat treatment. When all parts of the boiler have been separately tested and following assembly the boiler is to undergo a hydraulic test under a pressure of 1,25 p.

9.3.5 Hydraulic tests of condensers

Condensers are to be subjected to a hydrostatic test at the following test pressures:

- Steam space: 0,1 MPa
- Water space: maximum pressure which may be developed by the pump with closed discharge valve increased by 0,07 MPa. However, the test pressure is not to be less than 0,2 MPa. When the characteristics of the pump are not known, the hydrostatic test is to be carried out at a pressure not less than 0,35 MPa.

9.4 Certification

9.4.1 Certification of boilers and individually produced pressure vessels

Boilers and individually produced pressure vessels of classes 1, 2 and 3 are to be certified by the Society in accordance with the procedures stated in Part A.

9.4.2 Mass produced pressure vessels

Small mass produced pressure vessels of classes 1, 2 and 3 may be accepted provided they are type approved by the Society in accordance with the procedures stated in Part A.

Table 26 : Pressure vessel certification

Class	Drawing / Calculation		Material testing		Hydraulic test	
	Manufacturer	The Society	Manufacturer	The Society	Manufacturer	The Society
1	X	review	X	witness + workshop inspection	X	witness
2	X	review	X	review	X	witness
3	X	–	X	review	X	witness
Note 1: Certificates of the Manufacturer and the Society to be issued for all cases for pressure vessels covered by the Rules of the Society.						

Section 4 Steam Turbines

1 General

1.1 Application

1.1.1 Propulsion turbines and turbines for essential services

The requirements of this Section apply to:

a) all propulsion turbines

b) turbines intended for auxiliary services essential for safety and navigation, or for driving cargo pumps in tankers.

1.1.2 Auxiliary turbines driving generators

In addition to the requirements contained in this Section, auxiliary turbines driving electric generators are to comply with those of Ch 2, Sec 4 of the Rules.

1.2 Documentation to be submitted

1.2.1 For propulsion turbines and turbines intended for driving machinery for essential services, the plans and data listed in Tab 1 are to be submitted.

All listed plans are to be constructional plans complete with all dimensions and are to contain full indication of the types of materials employed.

Table 1 : Documents to be submitted

No.	A/I **(1)**	Item
1	I	Sectional assembly
2	A	Rotors and discs, revolving and stationary blades for each turbine
3	A	Fastening details of revolving and stationary blades
4	A	Casings
5	A	Schematic diagram of control and safety devices
6	I	General specification of the turbine, including an operation and instruction manual
7	I	Maximum power and corresponding maximum rotational speed, and the values of pressure and temperature at each stage
8	A	Material specifications of the major parts, including their physical, chemical and mechanical properties, the data relevant to rupture and creep at elevated temperatures, when the service temperature exceeds 400°C, the fatigue strength, the corrosion resistance and the heat treatments
9	I	Distribution box
10	A	Strength calculations of rotors, discs and blades and blade vibration calculations
11	A	Where the rotors, stators or other components of turbines are of welded construction, all particulars on the design of welded joints, welding conditions, heat treatments and non-destructive examinations after welding
(1) A = to be submitted for approval I = to be submitted for information		

2 Design and construction

2.1 Materials

2.1.1 Rotating components

a) Rotors, shafts and discs of turbines are to be of forged steel. In general, the forgings are to have minimum tensile strength R_m within the limits in Tab 2.

b) Rotors of small turbines may be built of special cast steels.

c) Turbine blades are to be built of corrosion-resistant materials.

Table 2 : Limits of R_m

Steel	R_m limits (N/mm²)
Carbon and carbon-manganese steel	$400 < R_m < 600$
Alloy steels for rotors	$500 < R_m < 800$
Alloy steels for discs and other forgings	$500 < R_m < 1000$

2.1.2 Static components

The casings and diaphragms of turbines are to be built of forged or cast steels capable of withstanding the pressures and temperatures to which they are subjected. Cast iron may be used for temperatures up to 300°C. Additionally, requirements mentioned in Ch 1, Sec 1, [3.7.2] are to be applied when other materials than steel are used for components in contact with flammable fluids

2.2 Design and constructional details

2.2.1 Rotors and stators

a) All components of turbines are to be free from defects and are to be built and installed with tolerances and clearances such as to allow thermal expansion and to minimise the distortions of casings and rotors in all expected service conditions.

b) Particular care is to be devoted to preventing condensation water from accumulating in the blade spaces of the casings. Adequate drain tubes and cocks are to be arranged in a suitable position, in the lower parts of the casings. Cocks are to be easy to operate.

c) When labyrinth packings are used, the steam supply pipes to the sealing system are to be so arranged that condensed steam may not enter the turbine.

d) Particular attention is to be paid to the connection of pipes to the turbine stators in order to avoid abnormal loads in service.

e) Smooth fillets are to be provided at changes of section of rotors, discs and blade roots. The holes in discs are to be well rounded and polished.

2.2.2 Bearings

a) Turbine bearings are to be so located that their lubrication is not impaired by overheating from adjacent hot parts.

b) Lubricating oil is to be prevented from dripping on high temperature parts.

c) Suitable arrangements for cooling the bearings after the turbines have been stopped may also be required, at the discretion of the Society.

2.2.3 Turning gear

a) Main propulsion turbines are to be equipped with turning gear for both directions of rotation. The rotors of auxiliary turbines are to be capable of being turned by hand.

b) The engagement of turning gear is to be visually indicated at the control platform.

c) An interlock is to be provided to ensure that the turbine cannot be started up when the turning gear is engaged.

2.2.4 Astern power for main propulsion

a) The main propulsion turbine is to have sufficient power for running astern. The astern power is considered to be sufficient if it is able to attain astern revolutions equivalent to at least 70% of the rated ahead revolutions for a period of at least 30 minutes.

b) For main propulsion machinery with reverse gearing, controllable pitch propellers or an electrical transmission system, astern running is not to cause any overloading of the propulsion machinery.

c) During astern running, the main condenser and the ahead turbines are not to be excessively overheated.

2.2.5 Interlock

The simultaneous admission of steam to the ahead and astern turbines is to be prevented by interlocks. Brief overlapping of the ahead and astern valves during manoeuvring may be permitted.

2.2.6 Turbine exhaust

a) Sentinel valves or other equivalent means are to be provided at the exhaust end of all turbines. The valve discharge outlets are to be clearly visible and suitably guarded, as necessary.

b) Where, in auxiliary steam turbines, the inlet steam pressure exceeds the pressure for which the exhaust casing and associated piping up to the exhaust valve are designed, means to relieve the excess pressure are to be provided.

2.2.7 Water accumulation prevention

a) Non-return valves or other approved means are to be fitted in bled steam connections to prevent steam and water returning into the turbines.

b) Bends are to be avoided in steam piping in which water may accumulate.

2.2.8 Steam strainers

Efficient steam strainers are to be provided close to the inlets to ahead and astern high pressure turbines or alternatively at the inlets to manoeuvring valves.

2.2.9 Emergency arrangements

a) In single screw ships fitted with cross compound steam turbines, the arrangements are to be such as to enable safe navigation when the steam supply to any one of the turbines is required to be isolated. For this emergency operation purpose the steam may be led directly to the low pressure (L.P.) turbine and either the high pressure (H.P.) or medium pressure (M.P.) turbine can exhaust direct to the condenser.

   Adequate arrangements and controls are to be provided for these operating conditions so that the pressure and temperature of the steam will not exceed those which the turbines and condenser can safely withstand.

   The necessary pipes and valves for these arrangements are to be readily available and properly marked. A fit up test of all combinations of pipes and valves is to be performed prior to the first sea trials.

   The permissible power/speeds when operating without one of the turbines (all combinations) is to be specified and information provided on board.

   The operation of the turbines under emergency conditions is to be assessed for the potential influence on shaft alignment and gear teeth loading conditions.

b) Ships classed for unrestricted service and fitted with a steam turbine propulsion plant and only one main boiler are to be provided with means to ensure emergency propulsion in the event of failure of the main boiler.

2.3 Welded fabrication

2.3.1 The manufacturer's requirements relative to the welding of turbine rotors or major forged or cast pieces, where permitted, are to be readily identifiable when the plans are submitted to the Society for approval. Requirements relative to fabrication, welding, heat treatments, examinations, testing and acceptance will be stipulated on a case by case basis.

In general, all weldings are to be carried out by qualified welders in accordance with qualified welding procedures and using approved consumables.

2.4 Control, monitoring and shut-off devices

2.4.1 Governors

a) Turbines for main propulsion machinery equipped with controllable pitch propellers, disengaging couplings or electrical transmission systems are to be fitted with an additional speed governor which, in the event of a sudden loss of load, prevents the revolutions from increasing to the trip speed.

b) The speed increase of turbines driving electric generators -except those for electrical propeller drive- resulting from a change from full load to no-load may not exceed 5% on the resumption of steady running conditions. The transient speed increase resulting from a sudden change from full load to no-load conditions is not to exceed 10% and is to be separated by a sufficient margin from the trip speed.

2.4.2 Overspeed devices

a) Each main and auxiliary turbine is to be provided with an overspeed protective device to prevent the rotational speed from exceeding the maximum rotational by more than 15%. The device is to be actuated by the turbine shaft.

b) Where two or more steam turbines are coupled to the same gear wheel, the Society may accept the fitting of only one overspeed device for all the coupled turbines.

c) For turbines driving electric generators, the overspeed protective device mentioned in a) is also to be fitted with a means for manual tripping.

d) Where exhaust steam from auxiliary systems is led to the main turbine, provision is to be made to cut off the steam automatically when the overspeed protective device is activated.

2.4.3 Rotor axial displacement

A quick-closing valve is to be provided which automatically shuts off the steam supply in the event of axial displacement of the rotor beyond the permissible limits stated by the manufacturer. The device controlling the valve is to be actuated by the turbine shaft.

2.4.4 Emergency oil supply

For the emergency lubricating oil supply, see Ch 1, Sec 10, [12.5].

2.4.5 Bearing lubrication failure

a) Main ahead turbines are to be provided with a quick-closing valve which automatically shuts off the steam supply in the event of a dangerous reduction in oil pressure in the bearing lubricating system.

b) This arrangement is to be such as to ensure the admission of steam to the astern turbine for braking purposes.

2.4.6 Shut-off arrangement

a) Arrangements are to be provided for shutting off the steam to the main turbines by a suitable hand trip device controlling the steam admission valve situated at the control platform and at the turbine itself.

b) Hand tripping for auxiliary turbines is to be arranged in the proximity of the turbine overspeed protective device.

c) The hand trip device is any device which is operated manually irrespective of the way the action is performed, i.e. mechanically or by means of external power.

d) The quick-closing valves are also to be manually operable at the turbine and from the control platform.

e) Re-setting of the quick-closing valve device may be effected only at the turbine or from the control platform with the control valves in the closed position.

f) Where the valves are operated by hydraulic oil systems fitted for automatic operation, they are to be fed by two pumps: one main pump and one standby pump. In any event, the standby pump is to be independent. In special cases, at the Society's discretion, a hand-operated pump may be accepted as a standby pump.

g) The starting up of any turbine is to be possible only when the quick-closing devices are ready for operation.

h) A quick-closing device is to be provided which automatically shuts off the steam supply in the event of an increase in pressure or water level in the condenser beyond the permissible limits.

2.4.7 Summary Tables

Tab 3 and Tab 4 summarise the minimum control and monitoring requirements for main propulsion and auxiliary turbines, respectively.

Table 3 : Main propulsion turbine

Symbol convention H = High, HH = High high, G = group alarm L = Low, LL = Low low, I = individual alarm X = function is required, R = remote	Monitoring		Automatic control				
			Turbine			Auxiliary	
Identification of system parameter	Alarm	Indication	Slow-down	Shut-down	Control	Stand by Start	Stop
• Main turbine speed		local					
	H			X			
					X		
• Main turbine axial displacement	X	local		X			
• Main turbine vibration	H	local					
Lubricating oil							
• Supply pressure		local					
	L			X **(2)**			
• Level of gravity tank	L **(1)**	local					
(1) Sensor to be located near the normal level **(2)** This is not to prevent astern operation for braking							

Table 4 : Auxiliary turbine

Symbol convention H = High, HH = High high, G = group alarm L = Low, LL = Low low, I = individual alarm X = function is required, R = remote	Monitoring		Automatic control				
			Turbine			Auxiliary	
Identification of system parameter	Alarm	Indication	Slow-down	Shut-down	Control	Stand by Start	Stop
Overspeed	H	local		X			
Rotor displacement	X	local		X			
Vibration	H	local					
Lubricating oil supply pressure	L			X			
Lubricating oil level in gravity tank	L						

3 Arrangement and installation

3.1 Foundations

3.1.1 Shipyards and Manufacturers are to take care that foundations of turbines and connected reduction gears are to be designed and built so that hull movements do not give rise to significant movements between reduction gears and turbines. In any event, such movements are to be absorbed by suitable couplings.

3.2 Jointing of mating surfaces

3.2.1 The mating flanges of casings are to form a tight joint without the use of any interposed material.

3.3 Piping installation

3.3.1 Pipes and mains connected to turbine casings are to be fitted in such a way as to minimise the thrust loads and moments.

3.4 Hot surfaces

3.4.1 Hot surfaces with which the crew are likely to come into contact during operation are to be suitably guarded or insulated. See Ch 1, Sec 1, [3.7].

3.5 Alignment

3.5.1 The Shipyard and the Manufacturer are to take particular care in the alignment of turbine-reduction gearing, taking account of all causes which may alter the alignment from cold conditions to normal service conditions.

When a structural tank is fitted in way of the turbine or gearing foundations, the expected tank temperature variations are to be taken into account during alignment operations.

Propulsion turbines are to be fitted with indicators showing the axial movements of rotors with respect to casings and the sliding movements of casings on the sliding feet.

3.6 Circulating water system

3.6.1 The circulating water system with vacuum ejectors is to be so arranged that water may not enter the low pressure turbines.

3.7 Gratings

3.7.1 Gratings and any other structures in way of the sliding feet or flexible supports are to be so arranged that turbine casing expansion is not restricted.

3.8 Drains

3.8.1 Turbines and the associated piping systems are to be equipped with adequate means of drainage.

3.9 Instruments

3.9.1 Main and auxiliary turbines are to be fitted with callipers and micrometers of a suitable type for verifying the alignment of rotors and pinion and gear-wheel shafts.

This check is to be performed to the Surveyor's satisfaction at the time of installation.

4 Material tests, workshop inspection and testing, certification

4.1 Material tests

4.1.1 Parts to be tested

The materials for the construction of the parts listed in Tab 5 are to be tested in compliance with the requirements of NR216 Materials and Welding.

Magnetic particle or liquid penetrant tests are required for the parts listed in Tab 5 and are to be effected by the Manufacturer in positions agreed upon by the Surveyor, where Manufacturer's experience shows defects are most likely to occur.

For important structural parts of the turbine, in addition to the above-mentioned non-destructive tests, examination of welded seams by approved methods of inspection may be required.

Where there are grounds to doubt the soundness of any turbine component, non-destructive tests using approved detecting methods may be required.

4.1.2 Special auxiliary turbines

In the case of auxiliary turbines with a steam inlet temperature of up to 250°C, the extent of the tests stated in Tab 5 may be limited to the disc and shaft materials.

4.2 Inspections and testing during construction

4.2.1 Inspections during construction

The following inspections and tests are to be carried out in the presence of the Surveyor during the construction of all turbines which are indicated in [1.1.1]. For shipboard tests, see Ch 1, Sec 18, [3.7].

- material tests, as required (see [4.1])
- welded fabrication (see [4.2.2])
- non-destructive examination of turbine blades (see [4.2.3])
- hydrostatic tests (see [4.2.4])
- safety valves (see [4.2.5])
- thermal stability test of rotor (see [4.2.6])
- rotor balancing and overspeed test (see [4.2.7] and [4.2.8])
- shop trials (see [4.2.9]).

4.2.2 Welded fabrication

Welded fabrication and testing is to be attended by the Surveyor, as may be deemed necessary by the Society.

4.2.3 Turbine blades

When turbine blades are calculated using a permissible stress $K > R_m/4$, all turbine rotor blades are to be checked by dye penetrants or other equivalent method.

4.2.4 Hydrostatic tests

a) Turbine and nozzle casings are to be subjected to a hydrostatic test at the greater of the following test pressures:

b) 1,5 times the working pressure

c) 1,5 times the starting pressure

d) However, the test pressure is not to be less than $0,2 N/mm^2$.

e) The turbine casings may be temporarily subdivided by diaphragms in order to obtain different pressure values for the various stages, if necessary.

f) Where it is not possible to perform hydrostatic tests, the manufacturer may submit to the Society, for consideration, alternative proposals for testing the integrity of turbine casings and the absence of defects therein.

g) For the bodies of quick-closing, safety, manoeuvring and control valves, the test pressure is to be 1,5 times the maximum allowable working pressure of the boiler (approval pressure). The sealing efficiency of these valves when closed is to be tested at 1,1 times the working pressure.

h) Intermediate coolers and heat exchangers are to be subjected to a hydrostatic test at 1,5 times the working pressure.

i) Pressure piping, valves and other fittings are to be subjected to hydrostatic tests in compliance with the normal requirements for these items.

4.2.5 Safety valves

All valves required in [2.4] are to be tested at their setting pressure in the presence of the Surveyor, as specified by the turbine manufacturer.

4.2.6 Thermal stability test of rotors

Solid forged and welded rotors of propulsion turbines are to be subjected to a thermal stability test where the service temperature exceeds 400°C. This test is to be carried out after heat treatment and rough machining or at a later stage of fabrication, in accordance with a procedure approved by the Society.

4.2.7 Balancing of rotors

Finished rotors, complete with all fittings and blades, are to be dynamically balanced in a balancing machine of appropriate sensitivity in relation to the size of the rotor. Normally this test is to be carried out with the primary part of the flexible coupling, if any.

4.2.8 Overspeed test of rotors

Finished rotors, complete with all fittings and blades, are to be subjected for at least 3 minutes to an overspeed test at the greater of the following values:

- 5% above the setting speed of the overspeed tripping device
- 15% above the maximum design speed.

The Society may waive this requirement provided that it can be demonstrated by the manufacturer, using an acceptable direct calculation procedure, that the rotor is able to safely withstand the above values of overspeed and that rotors are free from defects, as verified by means of non-destructive tests.

4.2.9 Shop trials

Where turbines are subjected to a trial run at the factory, the satisfactory functioning of the control, safety and monitoring equipment is to be verified by the Manufacturer during the trial run. Such verification is in any event to take place not later than the commissioning of the plant aboard ship.

In general, propulsion steam turbines are to be subjected to a works trial under steam but without load, up to the service rotational speed, as far as possible. In the course of the works trials, the overspeed devices for both main and auxiliary turbines are to be set.

4.3 Certification

4.3.1 Turbines required to be certified

For turbines required to be certified as per [1.1.1], Society's certificates (C) (see NR216 Materials and Welding, Ch 1, Sec 1, [4.2.1]) are required for material tests of rotating components and blades listed in Tab 5 and for works trials as per [4.2.1]. Provided the manufacturer has a quality assurance system accepted by the Society, a reduced number of inspections in the presence of the Surveyor may be agreed.

4.3.2 Turbines not required to be certified

For turbines not required to be certified as per [1.1.1], manufacturer's certificates including details of tests and inspections carried out at the shop are to be submitted. The acceptance of these turbines is, however, subject to their satisfactory performance during dock and sea trials.

4.3.3 Type approved turbines

For mass produced turbines of a type as mentioned in [1.1], the tests and trials on a prototype are to be carried out in the presence of the Surveyor as stated in [4.3.1] in the scope of the type approval program of the Society. The minimum required attendance of the Surveyor at the production tests and trials will be agreed between the manufacturer and the Society on a case by case basis.

Table 5 : Material and non-destructive tests

Turbine component	Material tests (mechanical properties and chemical composition)	Non-destructive tests	
		Magnetic particle or liquid penetrant	Ultrasonic or X Ray examination
Rotating parts (turbine rotors, shafts, stiff and flexible couplings, bolts for couplings and other dynamically stressed parts, integral pinions and gears)	all	all	sample
Stationary parts (castings and plates for casings)	all	spot as agreed between the Manufacturer and the Surveyor	–
Blades	sample	sample	sample
Piping and associated fittings	as required in the appropriate Section of the Rules	as required in the appropriate Section of the Rules	as required in the appropriate Section of the Rules

Section 5 Gas Turbines

1 General

1.1 Application

1.1.1 Propulsion turbines and turbines for essential services

The requirements of this Section apply to:

a) all propulsion turbines

b) turbines intended for auxiliary services essential for safety and navigation.

1.1.2 Turbines for auxiliary generators

In addition to the requirements contained in this Section, auxiliary turbines driving electric generators are to comply with the applicable requirements of Ch 3, Sec 3.

1.1.3 Dual fuel (DF) gas turbines

Specific requirements for dual fuel (DF) gas turbines are given in [5], in addition to the requirements applicable to all kinds of gas turbines given in [1] to [4].

1.1.4 Type approval

Turbines intended for propulsion and essential services are to be type approved by the Society.

1.2 Definition of rated power

1.2.1 Rated power is the maximum constant power that the turbine can develop at constant speed in the range of air inlet temperature between 0°C and 35°C. This power is to be considered with 0 intake and exhaust losses and with an air relative humidity of 60%.

1.3 Documentation to be submitted

1.3.1 For propulsion turbines and turbines intended for driving machinery for essential services, the plans listed in Tab 1 are to be submitted.

The listed constructional plans are to be complete with all dimensions and are to contain full indication of the types of materials used.

Table 1 : Documents to be submitted

No.	A/I **(1)**	Item
1	I	Sectional assembly
2	A	Detailed drawings of rotors, casings, blades, combustion chambers and heat exchangers **(2)**
3	A	Material specifications of the major parts, including their physical, chemical and mechanical properties, the data relevant to rupture and creep at elevated temperatures, the fatigue strength, the corrosion resistance and the heat treatments **(2)**
4	A	Where the rotors, stators or other components of turbines are of welded construction, all particulars on the design of welded joints, welding procedures and sequences, heat treatments and non-destructive examinations after welding **(2)**
5	I	General specification of the turbine, including instruction manual, description of structures and specification of the properties of fuel and lubricating oil to be used
6	I	Details of operating conditions, including the pressure and temperature curves in the turbine and compressor at the rated power and corresponding rotational speeds, and details of permissible temporary operation beyond the values for the rated power
7	A	Diagrammatic layout of the fuel system, including control and safety devices, and of the lubricating oil system
8	A	Cooling system layout, if applicable

(1) A = to be submitted for approval; I = to be submitted for information

(2) As an alternative, the Society may, on a case by case basis, consider reviewing a number of selected packages relative to important and critical parts of the turbine, where all the design, construction, inspection, testing and acceptance criteria used by the manufacturer are clearly described, provided the Quality Assurance system of the manufacturer is approved and certified by the Society.

No.	A/I (1)	Item
9	I	Where applicable, background information on previous operating experience in similar applications
10	I	Maintenance and overhaul procedures
11	A	Stress and temperature analysis in blades, rotors and combustion chamber **(2)**
12	A	Life time calculation of hot and high stress parts **(2)**
13	A	Blade and rotor vibration analysis **(2)**
14	A	Details of automatic safety devices together with failure mode and effect analysis (FMEA) **(2)**

(1) A = to be submitted for approval; I = to be submitted for information

(2) As an alternative, the Society may, on a case by case basis, consider reviewing a number of selected packages relative to important and critical parts of the turbine, where all the design, construction, inspection, testing and acceptance criteria used by the manufacturer are clearly described, provided the Quality Assurance system of the manufacturer is approved and certified by the Society.

2 Design and Construction

2.1 Materials

2.1.1 Approved materials

a) Gas turbine materials are to fulfil the requirements imposed by the operating conditions of the individual components. In the choice of materials, account is to be taken of effects such as creep, thermal fatigue, oxidation and corrosion to which individual components are subject when in service. Evidence of the suitability of the materials is to be supplied to the Society in the form of details of their chemical and mechanical properties and of the heat treatment applied. Where composite materials are used, their method of manufacture is to be described.

b) Turbine blades are to be built of corrosion and heat-resistant materials.

c) Requirements mentioned in Ch 1, Sec 1, [3.7.2] are to be applied when other materials than steel are used for components in contact with flammable fluids

2.2 Stress analyses

2.2.1 Calculation

a) The manufacturer is to submit the results of calculation of the stresses on each rotor under the most severe service conditions.

b) Fatigue analysis on each rotor, taking into account the stress concentrations, is also to be submitted.

c) The results of previous in-service experience on similar applications may be considered by the Society as an alternative to items a) and b) above.

The calculations and analyses (see also [1.3.1]) are to be carried out in accordance with criteria agreed by the Society. Data on the design service life and test results used to substantiate calculation assumptions are also to be provided.

2.2.2 Vibrations

The range of service speeds is not to give rise to unacceptable bending vibrations or to vibrations affecting the entire installation. Calculations of the critical speeds including details of their basic assumptions are to be submitted.

2.3 Design and constructional details

2.3.1 Rotors and stators

a) All components of turbines and compressors are to be free from defects and are to be built and installed with tolerances and clearances in order to allow thermal expansion and to minimise the distortions of casings and rotors in all expected service conditions.

b) Adequate drain tubes and cocks are to be arranged in a suitable position, in the lower parts of the casings. Cocks are to be easily operated.

c) Suitable protective devices are to be provided in order to prevent heat, noise or possible failure of rotating parts from causing injury to personnel. If, to this end, the whole gas turbine is enclosed in a protective covering, the covering is to be adequately ventilated inside.

d) Particular attention is to be paid to the connection in the casings of pipes to the turbine stators in order to avoid abnormal loads in service.

e) Smooth fillets are to be provided at changes of sections of rotors, discs and blade roots. The holes in discs are to be well rounded and polished.

2.3.2 Access and inspection openings

a) Access to the combustion chambers is to be ensured. Means are to be provided to inspect the burner cans or combustion chamber without having to remove the gas generator.

b) Inspection openings are to be provided to allow the gas turbine flow path air to be inspected with special equipment, e.g. a bore-scope or similar, without the need for dismantling.

2.3.3 Bearings

a) Turbine bearings are to be so located that their lubrication is not impaired by overheating from hot gases or adjacent hot parts.

b) Lubricating oil or fuel oil is to be prevented from dripping on high temperature parts.

c) Suitable arrangements for cooling the bearings after the turbines have been stopped are to be provided, if necessary to prevent bearing cooking.

d) Roller bearings are to be identifiable and are to have a life adequate for their intended purpose. In any event, their life cannot be less than 40000 hours.

2.3.4 Turning gear

a) Main propulsion turbines are to be equipped with turning gear or a starter for cranking. The rotors of auxiliary turbines are to be capable of being turned by hand.

b) The engagement of the turning gear or starter is to be visually indicated at the control platform.

c) An interlock is to be provided to ensure that the main turbine cannot be started up when the turning gear is engaged.

2.3.5 Cooling

The turbines and their external exhaust system are to be suitably insulated or cooled to avoid excessive outside temperature.

2.3.6 Air supply

a) The air intake ducting is to be equipped to prevent extraneous substances from entering the compressor and turbine.

b) Measures are to be taken to control the salinity of the combustion air, to meet the manufacturer's specification.

c) Cleaning equipment is to be provided to remove deposits from compressors and turbines.

d) Means are to be provided to prevent the formation of ice in the air intake.

2.3.7 Turbine exhaust arrangement

a) The gas exhaust arrangement is to be designed in such a way as to prevent the entrance of gases into the compressor.

b) Silencers or other equivalent arrangements are to be provided in the gas exhaust, to limit the airborne noise at one metre distance from the turbine to not more than 110 dB (A) in unmanned machinery spaces and not more than 90 dB (A) in manned spaces.

2.3.8 Multi-turbine installations

Multi-turbine installations are to have separate air inlets and exhaust systems to prevent recirculation through the idle turbine.

2.3.9 Fuel

a) Where the turbine is designed to burn non-distillate fuels, a fuel treatment system is to be provided to remove, as far as practicable, the corrosive constituents of the fuel or to inhibit their action in accordance with the manufacturer's specification.

b) Suitable means are to be provided to remove the deposits resulting from the burning of the fuel while avoiding abrasive or corrosive action, if applicable.

c) Gas turbines burning boil-off gases of liquefied gas cargo tanks will be specially considered by the Society taking into account the requirements of Pt D, Ch 9, Sec 16.

2.3.10 Start-up equipment

a) Gas turbines are to be fitted with start-up equipment enabling them to be started up from the "shutdown" condition.

b) Provisions are to be made so that any dangerous accumulation of liquid or gaseous fuel inside the turbines is thoroughly removed before any attempt at starting or restarting.

c) Starting devices are to be so arranged that firing operation is discontinued and the main fuel valve is closed within a pre-determined time when ignition is failed.

d) The minimum number of starts is to be such as to satisfy the requirements of Ch 1, Sec 1, [1.4.2].

2.3.11 Astern power

For main propulsion machinery with reverse gearing, controllable pitch propellers or an electrical transmission system, astern running is not to cause any overloading of the propulsion machinery.

2.3.12 Emergency operation

a) In installations with more than one propeller and connected shafting and more than one turbine, the failure of any gas turbine unit connected to a shafting line is not to affect the continued, independent operation of the remaining units.

b) In installations with only one propeller and connected shafting, driven by two or more main turbines, care is to be taken to ensure that, in the event of one of the turbines failing, the others are able to continue operation independently.

c) Ships classed for unrestricted service and fitted with only one propeller and connected shafting driven by a gas turbine are to be provided with means to ensure emergency propulsion in the event of failure of the main turbine.

2.4 Welded fabrication

2.4.1 The manufacturer's requirements relative to the welding of turbine rotors or major forged or cast pieces, where permitted, are to be readily identifiable by the Society in the plans submitted for approval.

In general, all weldings are to be carried out by qualified welders in accordance with qualified welding procedures using approved consumables.

2.5 Control, monitoring and shut-off devices

2.5.1 Control and monitoring arrangement

For each main propulsion system, the associated control and monitoring equipment is to be grouped together at each location from which the turbine may be controlled.

2.5.2 Governors and speed control system

a) Propulsion turbines which may be operated in no-load conditions are to be fitted with a control system capable of limiting the speed to a value not exceeding 10% of the maximum continuous speed.

b) Turbines for main propulsion machinery equipped with controllable pitch propellers, disengaging couplings or an electrical transmission system are to be fitted with a speed governor which, in the event of a sudden loss of load, prevents the revolutions from increasing to the trip speed.

c) In addition to the speed governor, turbines driving electric generators are to be fitted with a separate overspeed protective device, with a means for manual tripping, adjusted so as to prevent the rated speed from being exceeded by more than 15%.

d) The speed increase of turbines driving electric generators - except those for electrical propeller drive - resulting from a change from full load to no-load is not to exceed 5% on the resumption of steady running conditions. The transient speed increase resulting from a sudden change from full load to no-load conditions is not to exceed 10% and is to be separated by a sufficient margin from the trip speed. Alternative requirements may be considered by the Society on a case by case basis based on the actual turbine design and arrangement.

2.5.3 Monitoring system

The main operating parameters (pressure, temperature, rpm, etc.) are to be adequately monitored and displayed at the control console.

2.5.4 Emergency shut-off

a) An emergency push-button shut-off device is to be provided at the control console.

b) Any shut-off device provided in pursuance of the above is to shut off the fuel supply as near the burners as possible.

2.5.5 Quick-closing devices

a) Gas turbines are to be equipped with a quick closing device (shut-down device) which automatically shuts off the fuel supply to the turbines at least where required by Tab 2, unless the FMEA proves otherwise.

b) Re-setting of the quick-closing device may be effected only at the turbine or from the control platform with the fuel supply control valve in the closed position.

c) When the devices are operated by hydraulic oil systems fitted for automatic operation, they are to be fed by two pumps: one main pump and one standby pump. In any event, the standby pump is to be independent. In special cases, a hand-operated pump may be accepted as a standby pump.

d) The starting up of any turbine is to be possible only when the quick-closing devices are ready for operation.

2.5.6 Automatic temperature controls

The following turbine services are to be fitted with automatic temperature controls so as to maintain steady state conditions within the normal operating range of the main gas turbine:

a) lubricating oil supply and discharge

b) fuel oil supply (or, alternatively, automatic control of fuel oil viscosity)

c) exhaust gas in specific locations of the flow gas path as determined by the manufacturer.

2.5.7 Indicators, alarm and shutdown

Tab 2 indicates the minimum control and monitoring requirements for main propulsion and auxiliary turbines. Alarms can be added or omitted, taking into account the result of FMEA.

Table 2 : Main propulsion and auxiliary turbines

Symbol convention H = High, HH = High high, G = group alarm L = Low, LL = Low low, I = individual alarm X = function is required, R = remote	Monitoring		Automatic control				
			Turbine			Auxiliary	
Identification of system parameter	Alarm	Indication	Slow-down	Shut-down	Control	Stand by Start	Stop
• Control system failure	X						
• Automatic starting failure	X						
Mechanical monitoring of gas turbine							
• Speed		local					
					X		
	H			X			
• Rotor axial displacement (Not applicable to roller bearing)		local					
	H			X			
• Vibration	H **(1)**	local		X			
• Performed number of cycle of rotating part	H						
Gas generator monitoring							
• Flame and ignition failure	X			X			
• Fuel oil supply pressure	L	local					
• Fuel oil supply temperature	H	local					
• Cooling medium temperature	H	local					
• Exhaust gas temperature or gas temperature in specific locations of flow gas path		local					
	H **(1)**			X			
• Pressure at compressor inlet		local					
	L **(1)**			X			
Lubricating oil							
• Turbine supply pressure		local					
	L **(1)**			X			
• Reduction gear supply pressure		local					
	L **(1)**			X			
(1) Alarm to be activated at the suitable setting points prior to arriving the critical condition for the activation of shutdown devices							

3 Arrangement and installation

3.1 Foundations

3.1.1 Manufacturers and Shipyards are to arrange foundations of turbines and connected reduction gears to be so designed and built that hull movements do not give rise to significant movements between reduction gears and turbines. In any event, such movements are to be absorbed by suitable couplings.

3.2 Joints of mating surfaces

3.2.1 The mating flanges of casings are to form a tight joint without the use of any interposed material.

3.3 Piping installation

3.3.1 Pipes and mains connected to turbine and compressor casings are to be fitted in such a way as to minimise the thrust loads and moments. If flexible hoses are used for this purpose, they are to comply with the requirements in Ch 1, Sec 10, [2.6].

3.4 Hot surfaces

3.4.1 Hot surfaces with which the crew are likely to come into contact during operation are to be suitably guarded or insulated. See Ch 1, Sec 1, [3.7].

3.5 Alignment

3.5.1

a) The Manufacturer is to take particular care in the alignment of turbine-reduction gearing, taking account of all causes which may alter the alignment from cold conditions to normal service conditions.

b) When a structural tank is fitted in way of the turbine or gearing foundations, the expected tank temperature variations are to be taken into account during alignment operations.

c) Propulsion turbines are to be fitted with indicators showing the axial movements of rotors with respect to casings and the sliding movements of casings on the sliding feet. Such indicators are to be fitted in an easily visible position. This requirement does not apply to turbines fitted with roller bearings.

3.6 Gratings

3.6.1 Gratings and any other structures in way of the sliding feet or flexible supports are to be so arranged that turbine casing expansion is not restricted.

3.7 Drains

3.7.1 Turbines and the associated piping systems are to be equipped with adequate means of drainage.

3.8 Instruments

3.8.1 Main and auxiliary turbines are to be fitted with callipers and micrometers of a suitable type for verifying the alignment of rotors and pinion and gear-wheel shafts, when necessary.

At the time of installation on board, this check is to be performed in the presence and to the satisfaction of the Surveyor.

4 Material tests, workshop inspection and testing, certification

4.1 Type tests - General

4.1.1 Upon finalisation of the design for production of every new turbine type intended for installation on board ships, one turbine is to be presented for type testing as required below.

A type test carried out for a particular type of turbine at any manufacturer's works will be accepted for all turbines of the same type built by licensees and licensors.

Turbines which are subjected to type testing are to be tested in accordance with the scope specified below, it being taken for granted that:

- the turbine is optimised as required for the conditions of the type test
- the investigations and measurements required for reliable turbine operation have been carried out during preliminary internal tests by the turbine manufacturer
- the documentation to be submitted as required in [1.3.1] has been examined and, when necessary, approved by the Society and the latter has been informed regarding the nature and extent of investigations carried out during pre-production stages.

4.2 Type tests of turbines not admitted to an alternative inspection scheme

4.2.1 General

Turbines for which the Manufacturer is not admitted to testing and inspections according to an alternative inspection scheme (see NR320, Sec 1, [3.2]), are to be type tested in the presence of the Surveyor in accordance with the following requirements.

The type test is subdivided into three stages:

a) Stage A - Preliminary internal tests carried out by the manufacturer

Stage A includes functional tests and collection of operating values including testing hours during the internal tests, the relevant results of which are to be presented to the Surveyor during the type test. Testing hours of components which are inspected are to be stated by the manufacturer.

b) Stage B - Type approval test

The type approval test is to be carried out in the presence of the Surveyor.

c) Stage C - Inspection of main turbine components.

After completion of the test programme, the main turbine components are to be inspected.

The turbine manufacturer is to compile all results and measurements for the turbine tested during the type test in a type test report, which is to be submitted to the Society.

4.2.2 Stage A - Internal tests (functional tests and collection of operating data)

a) During the internal tests the turbine is to be operated at the load points considered important by the turbine manufacturer and the relevant operating values are to be recorded.

b) The load points may be selected according to the range of application.

c) Functional tests under normal operating conditions include:

1) The load points 25%, 50%, 75%, 100% of the rated power for which type approval is requested, to be carried out:
   - along the nominal (theoretical) propeller curve and at constant speed, for propulsion turbines
   - at constant speed, for turbines intended for generating sets.

2) The limit points of the permissible operating range.

   These limit points are to be defined by the turbine manufacturer.

d) An alternative testing program may be agreed between the manufacturer and the Society on a case by case basis.

4.2.3 Stage B - Type approval tests in the presence of the Surveyor

During the type test, the tests listed below are to be carried out in the presence of the Surveyor and the results are to be recorded in a report signed by both the turbine manufacturer and the Surveyor.

Any departures from this programme are to be agreed upon by the manufacturer and the Society.

a) Load points

The load points at which the turbine is to be operated according to the power/speed diagram are those listed below. The data to be measured and recorded when testing the turbine at various load points are to include all necessary parameters for turbine operation.

The operating time per load point depends on the turbine characteristics (achievement of steady-state condition) and the time for collection of the operating values.

Normally, an operating time of 0,5 hour per load point can be assumed.

At the maximum continuous power as per the following item (1) an operating time of two hours is required. Two sets of readings are to be taken at a minimum interval of one hour.

1) test at maximum continuous power P: i.e. 100% output at 100% torque and 100% speed.

2) test at maximum permissible torque (normally 110% of nominal torque T) at 100% speed; or test at maximum permissible power and speed according to the nominal propeller curve.

3) tests at partial loads, e.g. 75%, 50%, 25% of maximum continuous power P and speed according to the nominal propeller curve.

b) Additional tests
   - test at lowest turbine speed according to the nominal propeller curve
   - starting tests
   - governor tests
   - testing and rating of the safety systems.

4.2.4 Evaluation of test results

The results of the tests and checks required by [4.2.3] will be evaluated by the attending Surveyor. Normally the main operating data to be recorded during the tests are those listed in [4.3.4].

The values of temperatures and pressures of media, such as cooling media, lubricating oil, exhaust gases, etc., are to be within limits which, in the opinion of the Surveyor, are appropriate for the characteristics of the turbine tested.

4.2.5 Stage C - Inspection of turbine components

Immediately after the test run as per [4.2.3], a selected number of components agreed between the manufacturer and the Society are to be presented for inspection to the Surveyor.

4.3 Type tests of turbines admitted to an alternative inspection scheme

4.3.1 General

Turbines admitted to testing and inspections according to an alternative inspection scheme (see NR320, Sec 1, [3.2]) are to be type tested in the presence of the Surveyor in accordance with the following requirements.

The selection of the turbine to be tested from the production line is to be agreed upon with the Surveyor.

4.3.2 Type test

The programme of the type test is to be in general as specified below, P being the rated power and n the corresponding speed.

Any departures from this programme are to be agreed upon by the manufacturer and the Society.

a) 6 hours at full power

b) 10 hours shared at different partial loads (25%, 50%, 75% and 90% of power P);

c) 2 hours at intermittent loads

d) starting tests

e) testing of speed governor, overspeed device and lubricating oil system failure alarm device

f) testing of the minimum speed along the nominal (theoretical) propeller curve, for main propulsion turbines driving fixed pitch propellers, and of the minimum speed with no brake load, for main propulsion turbines driving controllable pitch propellers or for auxiliary turbines.

The tests at the above-mentioned outputs are to be combined together in working cycles which are to be repeated in succession for the entire duration within the limits indicated.

In particular, the full power test is to be carried out at the end of each cycle.

The partial load tests specified in (b) are to be carried out:

- along the nominal (theoretical) propeller curve and at constant speed, for propulsion turbines
- at constant speed, for turbines intended for generating sets.

In the case of prototype turbines, the duration and programme of the type test will be specially considered by the Society.

4.3.3 Alternatives

In cases of turbines for which the manufacturer submits documentary evidence proving successful service experience or results of previous bench tests, the Society may, at its discretion, allow a type test to be carried out, in the presence of the Surveyor according to a programme to be agreed upon in each instance.

4.3.4 Data to be recorded

During the type test, at least the following particulars are to be recorded:

a) ambient air temperature, pressure and atmospheric humidity in the test room

b) cooling medium temperature at the inlet of the turbine

c) characteristics of the fuel and lubricating oil used during the test

d) turbine speed

e) brake power

f) brake torque

g) intake and exhaust losses

h) lubricating oil pressure and temperature

i) exhaust gas temperature in locations of the flow gas path selected by the manufacturer

j) minimum starting air pressure and flow rate necessary to purge and start the turbine in cold condition, if applicable.

4.3.5 Inspection of main turbine components and evaluation of test results

The provisions of [4.2.4] and [4.2.5] are to be complied with, as far as applicable.

4.4 Material tests

4.4.1 The materials for the construction of the parts listed in Tab 3 are to be tested in compliance with the requirements of NR216 Materials and Welding.

Magnetic particle or liquid penetrant tests are required for the parts listed in Tab 3 and are to be effected by the Manufacturer in positions agreed upon by the Surveyor, where Manufacturer's experience shows defects are most likely to occur.

For important structural parts of the turbine, in addition to the above-mentioned non-destructive tests, examination of welded seams by approved methods of inspection may be required.

Where there are grounds to doubt the soundness of any turbine component, non-destructive tests using approved detecting methods may be required.

Table 3 : Material and non-destructive tests

Turbine component	Material tests (Mechanical properties and chemical composition)	Non-destructive tests	
		Magnetic particle or liquid penetrant	Ultrasonic or X Ray examination
Rotating parts (compressors and turbine rotors, shafts, stiff and flexible couplings, bolts for couplings and other dynamically stressed parts, integral pinions and gears)	all	all	all
Stationary parts (castings for casings intended for a temperature exceeding 230°C and plates for casings intended for a temperature exceeding 370°C or pressure exceeding 4 Mpa)	all	spot as agreed between the Manufacturer and the Surveyor	–
Blades	sample	sample	sample
Piping and associated fittings	as required in the appropriate Section of the Rules	as required in the appropriate Section of the Rules	as required in the appropriate Section of the Rules

4.5 Inspections and testing during construction

4.5.1 Inspections during construction

The following inspections and tests are to be carried out in the presence of a Surveyor during the construction of all turbines which are indicated in [1.1.1]. For on-board trials see Ch 1, Sec 18, [3.8].

- Material tests as required (see Ch 1, Sec 4, [4.1])
- Welding fabrication (see [4.5.2])
- Hydrostatic tests (see [4.5.3])
- Rotor balancing and overspeed test (see [4.5.4] and [4.5.5])
- Shop trials (See [4.5.6]).

4.5.2 Welding fabrication

Welding fabrication and testing is to be attended by the Surveyor, as may be deemed necessary by the Society.

4.5.3 Hydrostatic tests

Finished casing parts and heat exchangers are to be subjected to hydrostatic testing at 1,5 times the maximum permissible working pressure. If it is demonstrated by other means that the strength of casing parts is sufficient, a tightness test at 1,1 times the maximum permissible working pressure may be accepted by the Society. Where the hydrostatic test cannot be performed, alternative methods for verifying the integrity of the casings may be agreed between the manufacturer and the Society on a case by case basis.

4.5.4 Balancing of rotors

Finished rotors, complete with all fittings and blades, are to be dynamically balanced in a balancing machine of appropriate sensitivity in relation to the size of the rotor. Normally this test is to be carried out with the primary part of the flexible coupling, if any.

4.5.5 Overspeed test of rotors

Finished rotors, complete with all fittings and blades, are to be subjected for at least 3 minutes to an overspeed test at the greater of the following values:

- 5% above the setting speed of the overspeed tripping device
- 15% above the maximum design speed.

The Society may waive this requirement provided that it can be demonstrated by the manufacturer, using an acceptable direct calculation procedure, that the rotor is able to safely withstand the above overspeed values and that rotors are free from defects, as verified by means of non-destructive tests.

4.5.6 Shop trials

For shop trials, see [4.2.3] and [4.3.2].

4.6 Certification

4.6.1 Type approval certificate and its validity

Subject to the satisfactory outcome of the type tests and inspections specified in [4.2] or [4.3], the Society will issue to the engine manufacturer a "Type Approval Certificate" valid for all turbines of the same type.

4.6.2 Testing certification

a) Turbines admitted to an alternative inspection scheme

Works' certificates (W) (see NR216 Materials and Welding, Ch 1, Sec 1, [4.2.3]) are required for components and tests indicated in Tab 3 and tests and trials listed in [4.5.1]. However, the Society reserves the right to request that the shop trials be witnessed by a Surveyor on a case by case basis.

b) Engines not admitted to an alternative inspection scheme

Society's certificates (C) (see NR216 Materials and Welding, Ch 1, Sec 1, [4.2.1]) are required for material tests of rotating components and blades listed in Tab 3 and for works trials as per [4.5.3] and [4.5.4].

Works' certificates (W) (see NR216 Materials and Welding, Ch 1, Sec 1, [4.2.3]) are required for the other items listed in Tab 3 and for trials described in [4.5.2], [4.5.5] and [4.5.6].

5 Additional requirements for dual fuel (DF) gas turbines

5.1 Design principles

5.1.1 DF gas turbines are to be designed so as to operate safely with any gas composition within the ship specification range, taking into account the possible variations of the gas composition during the voyage. Tests are to be carried out to demonstrate their ability in this respect.

5.1.2 DF gas turbines and associated gas treatment and gas supply systems as well as their control system are to be so designed and arranged as to allow the proper operation of the turbine taking into account the expected variations of the gas characteristics, in particular:

- lower heating value
- specific gravity
- gas temperature
- ambient temperature.

5.1.3 The fuel supply to DF gas turbines is to be capable of being switched over from gas fuel to oil fuel while the turbine is running, without significant fluctuation of the turbine output nor of the rotational speed.

5.1.4 Prior to a normal stop, a DF gas turbine is to be switched over from gas fuel to oil fuel.

5.1.5 After each gas operation of a DF gas turbine not followed by an oil fuel operation, the turbine including the exhaust system is to be purged during a sufficient time in order to discharge the gas which may be present.

5.1.6 DF gas turbines are to be fitted with a control system allowing a steady running with stable combustion, with any kind of gas as mentioned in [5.1.1] above, throughout the operating speed range of the turbine. Automatic switch over to oil fuel may however be accepted at low loads.

5.1.7 Gas fuel and oil fuel supply systems to DF gas turbines are to be so designed and controlled as to avoid any excessive gas delivery to the turbine, which may result in overspeed, in particular while the turbine is running with gas fuel and oil fuel at the same time.

5.1.8 Arrangements are to be made to avoid the condensation of heavy hydrocarbons or water in the turbine gas inlet system. Where this is achieved by heating the gas fuel, a superheat of at least 28°C above the dew point is to be observed to ensure that no liquid may appear in the gas system downstream of the heater. Where necessary, the gas piping system is to be heat traced to avoid any condensation, in particular during the turbine start-up.

5.2 Control, alarms and safety systems

5.2.1 Control systems of DF gas turbines are to be type-approved by the Society.

5.2.2 The alarm and safety systems are to be provided in accordance with Tab 4.

5.3 Type tests

5.3.1 DF gas turbines are to be subjected to specific type tests in gas mode and dual fuel mode, according to an approved program.

Table 4 : Dual fuel gas turbine alarm and safety systems

Parameter	Alarms	Automatic safety actions			
		Activation of the block-and-bleed valves	Activation of the master gas valve	Switch over to oil fuel mode	Engine shut down
Gas supply - abnormal pressure	L+H	X		X	
Gas supply - abnormal temperature	L+H	X		X	
Gas admission valve - failure	X	X		X	
Turbine stop from any cause	X	X			
Note 1: Symbol convention: H = High, L = Low, X = function is required					

Section 6 Gearing

1 General

1.1 Application

1.1.1 Unless otherwise specified, the requirements of this Section apply to:

- reduction and/or reverse enclosed gears intended for propulsion plants with a transmitted power of 220 kW and above
- other reduction and step-up enclosed gears with a transmitted power of 110 kW and above.

These requirements, however, may be applied to the enclosed gears, whose gear set is intended to transmit a maximum continuous power less than those specified above at the request of the Society.

The provisions of Article [2] apply only to cylindrical involute spur or helical gears with external or internal teeth.

The provisions of Article [3] apply only to bevel gears (straight or oblique teeth). Application of other specific methods for the design of bevel gears could be taken into consideration by the Society.

Additional requirements for gears fitted to ships having an **ICE** notation are given in Part F, Chapter 8.

1.2 Documentation to be submitted

1.2.1 Documents

Before starting construction, all plans, specifications and calculations listed in Tab 1 are to be submitted to the Society.

1.2.2 Data

The data listed in Tab 2 or Tab 3 and in Tab 4 are to be submitted with the documents required in [1.2.1].

Table 1 : Documents to be submitted for gearing

No.	A/I **(2)**	Description of the document **(1)**
1	A	Constructional drawings of shafts and flanges
2	A	Constructional drawings of pinions and wheels, including: a) specification and details of hardening procedure: • core and surface mechanical characteristics • diagram of the depth of the hardened layer as a function of hardness values b) specification and details of the finishing procedure: • finishing method of tooth flanks (hobbling, shaving, lapping, grinding, shot-peening) • surface roughness for tooth flank and root fillet • tooth flank corrections (helix modification, crowning, tip-relief, end-relief), if any • flank tolerance class according to ISO 1328-1:2013
3	A	Shrinkage calculation for shrunk-on pinions, wheels rims and/or hubs with indication of the minimum and maximum shrinkage allowances
4	I	Calculation of load capacity of the gears
5	A/I **(3)**	Constructional drawings of casings
6	A	Functional diagram of the lubricating system, with indication of the: • specified grade of lubricating oil • expected oil temperature in service • kinematic viscosity of the oil
7	A	Functional diagram of control, monitoring and safety systems
8	I	Longitudinal and transverse cross-sectional assembly of the gearing, with indication of the type of clutch
9	I	Data form for calculation of gears **(4)**
10	I	Detailed justification of material quality used for gearing calculation (ML, MQ, or ME according to ISO 6336-5)

(1) Constructional drawings are to be accompanied by the specification of the materials employed including the chemical composition, heat treatment and mechanical properties and, where applicable, the welding details, welding procedure and stress relieving procedure.

(2) Submission of the drawings may be requested:
- for approval, shown as “A” in the Table
- for information, shown as “I” in the Table.

(3) “A” for welded casing, “I” otherwise

(4) The forms are given in Tab 2, Tab 3 and Tab 4.

Table 2 : Data to be submitted for cylindrical gears

Symbol	Values		Unit	Description
	Pinion	Wheel		
a			mm	Operating centre distance
b_B			mm	Common face width (for double helix gear, width of one helix)
A			-	Flank tolerance class according to ISO 1328-1:2013
b_S			mm	Web thickness
s_R			mm	Rim thickness
$R_{m,rim}$			N/mm²	Ultimate tensile strength of the rim material
B			mm	Total face width of double helix gears, including gap
d_s			mm	Shrinkage diameter
m_n			mm	Normal module
α_n			deg or rad	Normal pressure angle at reference cylinder
β			deg or rad	Helix angle at reference cylinder
x			-	Addendum modification coefficient
z			-	Number of teeth
P			kW	Transmitted power
n			rpm	Rotational speed
d_a			mm	Tip diameter
ρ_{a0}			mm	Tip radius of the tool
h_{fp}			mm	Basic rack dedendum
HRC			-	Rockwell hardness
R_{Zf}			µm	Mean peak-to-valley flank roughness of the gear pair
R_Z			µm	Mean peak-to-valley roughness of the gear pair
$R_{e,s}$			N/mm²	Minimum yield strength of the shaft material
ν_{40}			mm²/s	Nominal kinematic viscosity of oil at 40°C
pr			mm	Protuberance of the tool
q			mm	Material allowance for finish machining
d_{ext}			mm	External shaft diameter
d_{int}			mm	Internal shaft diameter
ℓ			mm	Bearing span
Z_E			$N^{1/2}$/mm	Elasticity factor

Table 3 : Data to be submitted for bevel gears

Symbol	Values		Unit	Description
	Pinion	Wheel		
A			-	Flank tolerance class according to ISO 1328-1:2013
s_R			mm	Rim thickness
d_s			mm	Shrinkage diameter
b			mm	Common face width (for double helix gear width of one helix)
m_{mn}			mm	Mean normal module
α_n			deg or rad	Normal pressure angle
β_m			deg or rad	Mean helix angle
z			-	Actual number of teeth
δ			deg or rad	Pitch angle
x_h			-	Addendum modification coefficient
x_s			-	Thickness modification coefficient
h_{aP}			mm	Addendum of the basic rack tooth profile
h_{fP}			mm	Dedendum of the basic rack tooth profile
ρ_{a0}			mm	Cutter edge radius

Symbol	Values		Unit	Description
	Pinion	Wheel		
r_{c0}			mm	Cutter radius
P			kW	Transmitted power
n			rpm	Rotational speed
HRC			-	Rockwell hardness
R_{Zf}			µm	Mean peak-to-valley flank roughness of the gear pair
R_Z			µm	Mean peak-to-valley roughness of the gear pair
$R_{e,s}$			N/mm²	Minimum yield strength of the shaft material
ν_{40}			mm²/s	Nominal kinematic viscosity of oil at 40°C
pr			mm	Protuberance of the tool
q			mm	Material allowance for finish machining
d_{ext}			mm	External shaft diameter
d_{int}			mm	Internal shaft diameter
ℓ			mm	Bearing span
Z_E			$N^{1/2}$/mm	Elasticity factor

Table 4 : General data to be submitted for bevel and cylindrical gears

Condition of use — Tick the box

Main gears (propulsion)	Diesel engine	with hydraulic coupling	
		with elastic coupling	
		with other type of coupling	
	Turbine		
	Electric motor		
Gears intended for ahead running			
Gears intended for astern running only			
Other intermittent running			
Gears with occasional part load in reverse direction (main wheel in reverse gearbox)			
Idler gears			
Shrunk on pinions and wheel rims			
Otherwise			

Arrangement

Single gear		
Dual tandem gear	without quill shaft **(1)**	
	with quill shaft **(1)**	
Epicyclic gear	with 3 planetary gears and less	
	with 4 planetary gears	
	with 5 planetary gears	
	with 6 planetary gears and more	

Machining

No modification	
Central crowning fma	
Central crowning fma + fsh	
Helix correction	
Helix correction + crowning	
End relief	
Maximum base pitch deviation of the wheel	
With optimum profile correction	

(1) A quill shaft is a torsionally flexible shaft intended to improve the load distribution between the gears.

Material			Pinion	Wheel
St	Normalized low carbon steels / cast steels	Wrought normalized low carbon steels		
St (Cast)		Cast steels		
GTS (Perl.)	Cast iron materials	Black malleable cast iron (perlitic structure)		
GGG (Perl.)		Nodular cast iron (perlitic structure)		
GGG (Bai.)		Nodular cast iron (bainitic structure)		
GGG (ferr.)		Nodular cast iron (ferritic structure)		
GG		Grey cast iron		
V	Through-hardened wrought steels	Carbon steels, alloy steels		
V (cast)	Through-hardened cast steels	Carbon steels, alloy steels		
Eh	Case-hardened wrought steels			
IF	Flame or induction hardened wrought or cast steels			
NT (nitr.)	Nitrided wrought steels/nitrided steels / nitrided through-hardening steels	Nitriding steels		
NV (nitr.)		Through-hardening steels		
NV (nitrocar.)	Wrought steels, nitrocarburized	Through-hardening steels		
(1) A quill shaft is a torsionally flexible shaft intended to improve the load distribution between the gears.				

2 Design of gears - Determination of the load capacity of cylindrical gears

2.1 Symbols, units, definitions

2.1.1 Symbols and units

The meaning of the main symbols used in this Article is specified below.

Other symbols introduced in connection with the definition of influence factors are defined in the appropriate sub-articles.

A : Flank tolerance class according to ISO 1328-1:2013
a : Operating centre distance, in mm
b : Effective face width, in mm (for double helix gear, $b = 2\ b_B$)
b_B : Common face width, in mm (for double helix gear, width of one helix)
b_S : Web thickness, in mm
B : Total face width of double helix gear, including gap, in mm
d : Reference diameter, in mm
d_a : Tip diameter, in mm
d_b : Base diameter, in mm
d_{ext} : External diameter of shaft, in mm
d_{int} : Internal diameter of shaft, in mm
d_f : Root diameter, in mm
d_s : Shrinkage diameter, in mm
d_w : Working pitch diameter, in mm
F_t : Nominal tangential load, in N
F_β : Total helix deviation, in µm
h : Tooth depth, in mmHB
h_{fp} : Basic rack dedendum, in mm
HB : Brinell hardness, in N/mm^2
HRC : Rockwell hardness
HV : Vickers hardness, in N/mm^2
k : Gear axial position on shaft with respect to the bearings
ℓ : Bearing span, in mm
m_n : Normal module, in mm
m_t : Transverse module, in mm
n : Rotational speed, in rpmP
P : Transmitted power, in kW
pr : Protuberance of the tool, in mm
q : Material allowance for finish machining, in mm

$R_{m,rim}$: Ultimate tensile strength of the rim material, in N/mm²
$R_{e,s}$: Minimum yield strength of the shaft material, in N/mm²
R_Z : Mean peak-to-valley roughness of the gear pair, in µm
R_{Zf} : Mean peak-to-valley flank roughness of the gear pair, in µm
s_R : Rim thickness, in mm
T : Transmitted torque, in kN.m
u : Reduction ratio
v : Linear velocity at pitch diameter, in m/s
x : Addendum modification coefficient
z : Number of teeth
z_n : Virtual number of teeth
α_a : Transverse profile angle at tooth tip
α_n : Normal pressure angle at reference cylinder
α_t : Transverse pressure angle at reference cylinder
α_{tw} : Transverse pressure angle at working pitch cylinder
β : Helix angle at reference cylinder
β_b : Base helix angle
ε_α : Transverse contact ratio
ε_β : Overlap ratio
ε_γ : Total contact ratio
ν_{40} : Nominal kinematic viscosity of oil at 40°C, in mm²/s
ρ_{a0} : Tip radius of the tool, in mm
σ_F : Tooth root bending stress, in N/mm²
σ_{FE} : Endurance limit for tooth root bending stress, in N/mm²
σ_{FP} : Permissible tooth root bending stress, in N/mm²
σ_H : Contact stress, in N/mm²
$\sigma_{H,lim}$: Endurance limit for contact stress, in N/mm²
σ_{HP} : Permissible contact stress, in N/mm²

Subscripts:

- 1 for pinion, i.e. the gear having the smaller number of teeth
- 2 for wheel.

2.1.2 Geometrical definitions

In the calculation of surface durability, b is the minimum face width on the pitch diameter between pinion and wheel.

In tooth strength calculations, b_1 and b_2 are the face widths at the respective tooth roots. In any case, b_1 or b_2 are not to be taken greater than b by more than one module m_n (in case of width of one gear much more important than the other).

For internal gear, z_2, a, d_2, d_{a2}, d_{b2}, x_2 and d_{w2} are to be taken negative.

$$u = \frac{z_2}{z_1}$$

Note 1: u > 0 for external gears, u < 0 for internal gears.

$$\tan\alpha_t = \frac{\tan\alpha_n}{\cos\beta}$$

$$d_i = \frac{z_i \cdot m_n}{\cos\beta}$$

$$d_{bi} = d_i \cdot \cos\alpha_t$$

$$d_{w1} = \frac{2 \cdot a}{1 + u}$$

$$d_{w2} = \frac{2 \cdot a \cdot u}{1 + u}$$

$$d_{fi} = d_i + 2 \cdot m_n \cdot x_i - 2 \cdot h_{fPi}$$

$$h_i = 0{,}5\ (d_{ai} - d_{fi})$$

$$\cos\alpha_{tw} = \frac{d_{b1} + d_{b2}}{2a}$$

$$\sin\beta_b = \sin\beta \cdot \cos\alpha_n$$

$$z_{ni} = \frac{z_i}{\cos\beta \cdot (\cos\beta_b)^2}$$

$$\cos\alpha_{ai} = \frac{d_{bi}}{d_{ai}}$$

$$\varepsilon_\alpha = \frac{z_1}{2\pi}(\tan\alpha_{a1} - \tan\alpha_{wt}) + \frac{z_2}{2\pi}(\tan\alpha_{a2} - \tan\alpha_{wt})$$

$$\varepsilon_\beta = \frac{b \cdot \sin\beta}{\pi \cdot m_n}$$

$$\varepsilon_\gamma = \varepsilon_\alpha + \varepsilon_\beta$$

$$F_{\beta i} = 2^{0,5 \cdot (Q_i - 5)} \cdot (0,1 \cdot |d_i|^{0,5} + 0,63 \cdot b_B^{0,5} + 4,2)$$

$$T_i = \frac{60}{2\pi} \cdot \frac{P}{n_i}$$

$$F_t = \frac{P}{n_1} \cdot \frac{60}{\pi \cdot d_1} \cdot 10^6$$

$$v_i = \frac{\pi \cdot n_i}{60} \cdot \frac{d_{wi}}{10^3}$$

2.2 Principle

2.2.1

a) The following requirements apply to cylindrical involute spur or helical gears with external or internal teeth, and provide a method for the calculation of the load capacity with regard to:

- the surface durability (contact stress)
- the tooth root bending stress.

The cylindrical gears for marine application are to comply with the following restrictions:

- $1,2 < \varepsilon_\alpha < 2,5$
- $\beta < 30°$
- $s_R > 3,5\ m_n$

The relevant formulae are provided in [2.4] and [2.5].

The influence factors common to the formulae are given in [2.3].

b) Gears, for which the conditions of validity of some factors or formulae are not satisfied, will be given special consideration by the Society.

c) Other methods of determination of load capacity will be given special consideration by the Society. Any alternative calculations are to comply with the ISO 6336 series standard.

2.3 General influence factors

2.3.1 General

General influence factors are defined in [2.3.2], [2.3.3], [2.3.4], [2.3.5] and [2.3.6]. Alternative values may be used provided they are derived from appropriate measurements.

2.3.2 Application factor K_A

The application factor K_A accounts for dynamic overloads from sources external to the gearing (driven and driving machines).

The values of K_A are given in Tab 5.

2.3.3 Load sharing factor K_γ

The load sharing factor K_γ accounts for the uneven sharing of load on multiple path transmissions, such as epicyclic gears or tandem gears.

The values of K_γ are given in Tab 6.

Table 5 : Application factor K_A

Type of installation			K_A
Main gears (propulsion)	Diesel engine	with hydraulic coupling	1,05
		with elastic coupling	1,30
		with other type of coupling	1,50
	Turbine		1,05
	Electric motor		1,05
Auxiliary gears	Diesel engine	with hydraulic coupling	1,00
		with elastic coupling	1,20
		with other type of coupling	1,40
	Electric motor		1,00

Table 6 : Load sharing factor K_γ

Type of gear		K_γ
Dual tandem gear	without quill shaft **(1)**	1,15
	with quill shaft **(1)**	1,10
Epicyclic gear	with 3 planetary gears and less	1,00
	with 4 planetary gears	1,20
	with 5 planetary gears	1,30
	with 6 planetary gears and more	1,40
(1) A quill shaft is a torsionally flexible shaft intended to improve the load distribution between the gears.		

2.3.4 Dynamic factor K_V (method B)

The dynamic factor K_V accounts for the additional internal dynamic loads acting on the tooth flanks and due to the vibrations of the pinion and the wheel.

The calculation of the dynamic factor K_V is defined in Tab 7, where:

N : Resonance ratio, i.e. ratio of the pinion speed to the resonance speed:

$N = n_1 / n_{E1}$, with:

n_{E1} : Resonance speed, in rpm, defined by the following formula:

$$n_{E1} = \frac{30000}{\pi z_1} \cdot \sqrt{\frac{c_{\gamma\alpha}}{m_{red}}}$$

where:

m_{red} : Reduced mass of gear pair, in kg/mm

In case of external gears, estimated calculation of m_{red} is given in Tab 8

$c_{\gamma\alpha}$: Mesh stiffness, in N/(mm·µm).

For gears with $\beta \le 30°$, the calculation of $c_{\gamma\alpha}$ is detailed in Tab 9.

The value of N determines the range of vibrations:

- subcritical range, when $N \le N_S$
- main resonance range, when $N_S < N < 1,15$

  This field is not permitted
- intermediate range, when $1,15 \le N \le 1,50$

  This field is normally to be avoided. Some alternative and more precise calculation could be accepted and special consideration will be given by the Society
- supercritical range, when $1,50 < N$.

The lower limit of resonance N_S is defined as follows:

- if $F_t K_A / b \ge 100$ N/mm:

  $N_s = 0,85$
- if $F_t K_A / b < 100$ N/mm:

$$N_s = 0,5 + 0,35 \sqrt{\frac{F_t K_A}{100b}}$$

Table 7 : Dynamic factor K_V

Resonance domain	Factor K_V
$N \le N_S$	$K_V = N\,(C_{v1}\,B_P + C_{v2}\,B_f + C_{v3}\,B_K) + 1$
$N > 1{,}50$	$K_V = C_{v5}\,B_P + C_{v6}\,B_F + C_{v7}$

Note 1:

B_P : Non-dimensional parameter taking into account the effect of tooth deviations and profile modifications:

$$B_P = \frac{c' \cdot f_{pb,eff}}{K_A \cdot (F_t/b)}$$

with:

c' : Single stiffness defined in Tab 9

$f_{pb,eff}$: Effective base pitch deviation, in µm, equal to: $f_{pb,eff} = f_{pb} - y_\alpha$ with f_{pb} defined in Tab 14 and y_α defined in Tab 15

B_f : Non-dimensional parameter taking into account the effect of tooth deviations and profile modifications: $B_f = B_P$

B_k : Non-dimensional parameter taking into account the effect of tooth deviations and profile modifications:

$$B_k = \left|1 - \frac{c' \cdot C_a}{K_A \cdot F_t/b}\right|$$

with:

$$C_a = \frac{1}{18} \cdot \left(\frac{\sigma_{Hlim}}{97} - (18{,}45)\right)^2 + 1{,}5$$

When material of the pinion is different from that of the wheel: $C_a = 0{,}5\,(C_{a1} + C_{a2})$

C_{v1} : Factor for pitch deviation effects: $C_{v1} = 0{,}32$

C_{v2} : Factor for tooth profile deviation effects:
- if $1 < \varepsilon_\gamma \le 2$: $C_{v2} = 0{,}34$
- if $2 < \varepsilon_\gamma$: $C_{v2} = 0{,}57 / (\varepsilon_\gamma - 0{,}3)$

C_{v3} : Factor for cyclic variation effect in mesh stiffness:
- if $1 < \varepsilon_\gamma \le 2$: $C_{v3} = 0{,}23$
- if $2 < \varepsilon_\gamma$: $C_{v3} = 0{,}096 / (\varepsilon_\gamma - 1{,}56)$

C_{v5} : Factor: $C_{v5} = 0{,}47$

C_{v6} : Factor:
- if $1 < \varepsilon_\gamma \le 2$: $C_{v6} = 0{,}47$
- if $2 < \varepsilon_\gamma$: $C_{v6} = 0{,}12 / (\varepsilon_\gamma - 1{,}74)$

C_{v7} : Factor:
- if $1 < \varepsilon_\gamma \le 1{,}5$: $C_{v7} = 0{,}75$
- if $1{,}5 < \varepsilon_\gamma \le 2{,}5$: $C_{v7} = 0{,}125 \sin[\pi\,(\varepsilon_\gamma - 2)] + 0{,}875$
- if $2{,}5 < \varepsilon_\gamma$: $C_{v7} = 1$

Table 8 : Estimated calculation of reduced mass m_{red}

Gear rim	Rim ratio	m_{red}, in kg/mm
$s_{Ri} = 0$	$1 - q_i^4 = 1$	$m_{red} = \frac{\pi}{8} \cdot \left(\frac{d_{a1} + d_{f1}}{2\,d_{b1}}\right)^2 \cdot \frac{(d_{f1} + d_{a1})^2}{4 \cdot \left(\frac{1}{\rho_1} + \frac{1}{\rho_2 \cdot u^2}\right)}$
$s_{Ri} \ne 0$	$q_i = \frac{2 \cdot (d_{fi} - 2 \cdot s_{Ri})}{d_{fi} + d_{ai}}$	$m_{red} = \frac{\pi}{8} \cdot \left(\frac{d_{a1} + d_{f1}}{2\,d_{b1}}\right)^2 \cdot \frac{(d_{f1} + d_{a1})^2}{4 \cdot \left[\frac{1}{(1 - q_1^4) \cdot \rho_1} + \frac{1}{(1 - q_2^4) \cdot \rho_2 \cdot u^2}\right]}$

Note 1:

ρ_i is the density of gearing material ($\rho = 7{,}83 \cdot 10^{-6}$ for steel)

Table 9 : Mesh stiffness $c_{\gamma\alpha}$ (method B)

Specific load	$c_{\gamma\alpha}$, in N/(mm.µm) **(1)**
$F_t K_A / b \geq 100$ N/mm	$c_{\gamma\alpha} = c' (0,75\ \varepsilon_\alpha + 0,25) = c'_{th}\ C_M\ C_R\ C_B \cos\beta\ (0,75\ \varepsilon_\alpha + 0,25)$
$F_t K_A / b < 100$ N/mm	$c_{\gamma\alpha} = c'(0,75\ \varepsilon_\alpha + 0,25) = c'_{th}\ C_M C_R C_B \cos\beta \left(\frac{F_t K_A / b}{100}\right)^{0,25} (0,75\ \varepsilon_\alpha + 0,25)$

(1) When $\varepsilon_\alpha < 1,2$: $c_{\gamma\alpha}$ may be reduced up to 10% in case of spur gears.

Note 1:

c' : Single stiffness, in N/(mm.µm)

c'_{th} : Theoretical mesh stiffness, in N/(mm.µm), equal to:

$$c'_{th} = \frac{1}{0,04723 + \frac{0,15551}{z_{n1}} + \frac{0,25791}{z_{n2}} - 0,00635\ x_1 - 0,00193\ x_2 - \frac{0,11654\ x_1}{z_{n1}} - \frac{0,24188\ x_2}{z_{n2}} + 0,00529\ x_1^2 + 0,00182\ x_2^2}$$

where the following limitations are to be verified:

- $x_1 \geq x_2$, and
- $-0,5 \leq x_1 + x_2 \leq 2,0$

For internal gears, z_{n2} should be replaced by infinity

C_M : Measurements correction factor, equal to:

$C_M = 0,8$

C_R : Gear blank factor:

- for solid disc gears ($s_R = 0$):

  $C_R = 1,0$
- otherwise:

  $$C_R = 1 + \frac{\ln(b_s/b)}{5 \cdot e^{s_R/5m_n}}$$

  with the following limitations:

  $0,2 \leq b_s / b \leq 1,2$ and $s_R / m_n \geq 1$

C_B : Basic rack factor, equal to:

$$C_B = 1 + 0,5 \cdot \left(1,2 - \frac{h_{fP}}{m_n}\right) \cdot [1,0 - 0,02 \cdot (20 - \alpha_n)]$$

When pinion basic rack dedendum is different from that of the wheel, $C_B = 0,5\ (C_{B1} + C_{B2})$.

2.3.5 Face load distribution factors $K_{H\beta}$ and $K_{F\beta}$ (method C)

The face load distribution factors, $K_{H\beta}$ for contact stress and $K_{F\beta}$ for tooth root bending stress, account for the effects of non-uniform distribution of load across the face width.

a) The values of $K_{H\beta}$ are given in Tab 10. They apply only to gears with:

- wheel, case, wheel shaft and bearings of stiff construction
- pinion on a solid or hollow shaft with an inner diameter ratio not exceeding 0,5 and located symmetrically between the bearings
- no effect of clearances
- no external loads acting on the pinion shaft.

Note 1: Gears for which the above conditions are not satisfied will be given special consideration by the Society.

The calculation of the initial equivalent misalignment $F_{\beta x}$ is defined in Tab 11.

The calculations of the running-in allowance $y\beta$ and the running-in factor $\chi\beta$ are defined in Tab 12.

The calculation of the mesh misalignment due to deformations of shafts depends on the constant of the pinion K′ and the distance s of the pinion. They are defined in Tab 13.

b) $K_{F\beta}$ is to be determined using the following formula:

$$K_{F\beta} = K_{H\beta}^{\frac{1}{1 + h/b_B + (h/b_B)^2}}$$

where b/h is the smaller of b_{B1}/h_1 and b_{B2}/h_2 but is not to be taken lower than 3.

2.3.6 Transverse load distribution factors $K_{H\alpha}$ and $K_{F\alpha}$ (method B)

The transverse load distribution factors, $K_{H\alpha}$ for contact stress and $K_{F\alpha}$ for tooth root bending stress, account for the effects of pitch and profile errors on the transversal load distribution between two or more pairs of teeth in mesh.

The values of $K_{H\alpha}$ and $K_{F\alpha}$ are given in Tab 14.

Table 10 : Face load factor for contact stress $K_{H\beta}$

	Calculated face width	Factor $K_{H\beta}$
$\frac{F_{\beta y} c_{\gamma\beta}}{2 F_m / b} \geq 1$	$\frac{b_{cal}}{b} = \sqrt{\frac{2 F_m / b}{F_{\beta y} c_{\gamma\beta}}} \leq 1$	$K_{H\beta} = \sqrt{\frac{2 F_{\beta y} c_{\gamma\beta}}{F_m / b}} \geq 2$
$\frac{F_{\beta y} c_{\gamma\beta}}{2 F_m / b} < 1$	$\frac{b_{cal}}{b} = 0{,}5 + \frac{F_m / b}{F_{\beta y} c_{\gamma\beta}} > 1$	$K_{H\beta} = 1 + \frac{F_{\beta y} c_{\gamma\beta}}{2 F_m / b} < 2$

Note 1:

b_{cal} : Calculated face width, in mm

F_m : Mean transverse tangential load, in N:

$F_m = F_t K_A K_V$

$F_{\beta y}$: Effective misalignment after running-in, in µm:

$F_{\beta y} = F_{\beta x} - y_\beta = F_{\beta x} \chi_\beta$

where:

$F_{\beta x}$: Initial equivalent misalignment. Estimated values are given in Tab 11

y_β, χ_β : Running-in allowance, in µm, and running-in factor, respectively, defined in Tab 12

$c_{\gamma\beta}$: Mesh stiffness, in N/(mm·µm):

$c_{\gamma\beta} = 0{,}85\ c_{\gamma\alpha}$

$c_{\gamma\alpha}$ being the mesh stiffness defined in Tab 9.

Table 11 : Initial equivalent misalignment $F_{\beta x}$

Helix modification	$F_{\beta x}$, in µm **(1)**	Default estimated values of f_{ma}
None	$F_{\beta x} = 1{,}33\ f_{sh} + f_{ma}$	$f_{ma} = F_\beta$
Central crowning with $C_\beta = 0{,}5\ f_{ma}$	$F_{\beta x} = 1{,}33\ f_{sh} + 0{,}5\ f_{ma}$	$f_{ma} = 0{,}5\ F_\beta$
Central crowning with $C_\beta = 0{,}5\ (f_{ma} + f_{sh})$	$F_{\beta x} = 0{,}665\ f_{sh} + 0{,}5\ f_{ma}$	$f_{ma} = 0{,}5\ F_\beta$
Helix correction	$F_{\beta x} = 0{,}133\ f_{sh} + f_{ma}$	$f_{ma} = 0{,}5\ F_\beta$
Helix correction plus central crowning	$F_{\beta x} = 0{,}133\ f_{sh} + 0{,}5\ f_{ma}$	$f_{ma} = 0{,}5\ F_\beta$
End relief	$F_{\beta x} = 0{,}931\ f_{sh} + 0{,}7\ f_{ma}$	$f_{ma} = 0{,}7\ F_\beta$

(1) The misalignment $F_{\beta x}$ is to be taken greater than $F_{\beta x,min} = 0{,}005\ F_m / b$

Note 1:

f_{sh} : Mesh misalignment due to deformations of shafts, in µm:

$$f_{sh} = \frac{F_m}{b} \cdot 0{,}023 \left(\left| B^* + K' \frac{\ell \cdot s \cdot d_1^{\,2}}{d_{ext}^{\,4}} - 0{,}3 \right| + 0{,}3 \right) \cdot \left(\frac{d_B}{d_1} \right)^2$$

where:

B* : Transmitted torque factor depending on k, percentage of input torque transmitted in one gear mesh:

- for spur and single helical gears: $B^* = 1 + 2\ (100 - k) / k$
- for double helical gears: $B^* = 0{,}5 + (200 - k) / k$

K′ : Constant of the pinion defined in Tab 13

s : Distance of the pinion, in mm, as shown in Tab 13

f_{ma} : Mesh misalignment due to manufacturing deviations, in µm.

Table 12 : Running-in allowance y_β and running-in factor $\chi\beta$

Material	y_β, in µm	χ_β	Limitations
St, St (cast), GTS (perl.), GGG (perl.), GGG (bai.), V, V (cast)	$y_\beta = \frac{320}{\sigma_{H,\,lim}} F_{\beta x}$	$\chi_\beta = 1 - \frac{320}{\sigma_{H,\,lim}}$	$y_\beta \leq F_{\beta x}$ and $\chi_\beta \geq 0$ • if 5 m/s < v ≤ 10 m/s: $y_\beta \leq 25600 / \sigma_{H,\,lim}$ • if 10 m/s < v: $y_\beta \leq 12800 / \sigma_{H,\,lim}$
GGG (ferr.), GG	$y_\beta = 0{,}55\ F_{\beta x}$	$\chi_\beta = 0{,}45$	• if 5 m/s < v ≤ 10 m/s: $y_\beta \leq 45$ • if 10 m/s < v: $y_\beta \leq 22$
Eh, IF, NT (nitr.), NV (nitr.), NV (nitrocar.)	$y_\beta = 0{,}15\ F_{\beta x}$	$\chi_\beta = 0{,}85$	$y_\beta \leq 6$

Note 1: $\sigma_{H,\,lim}$ is defined in [2.4.9].

Note 2: When material of the pinion differs from that of the wheel: $y_\beta = 0{,}5\ (y_{\beta 1} + y_{\beta 2})$ and $\chi_\beta = 0{,}5\ (\chi_{\beta 1} + \chi_{\beta 2})$

Table 13 : Constant of the pinion K' and distance of the pinion s

Arrangement **(1)**	Constant K' with stiffening	Constant K' without stiffening **(2)**
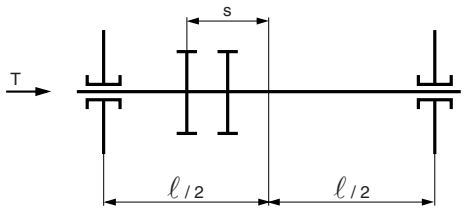	0,48	0,8
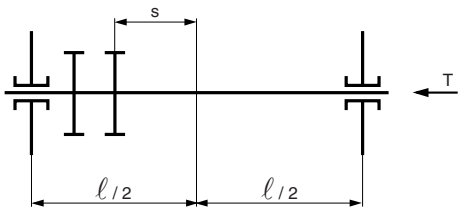	– 0,48	– 0,8
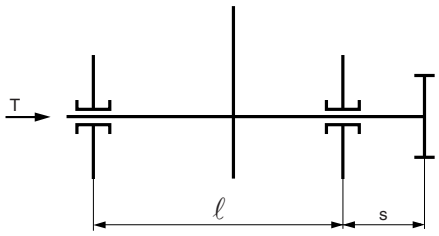	1,33	1,33
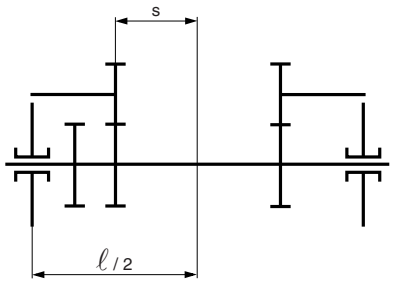	– 0,36	– 0,6
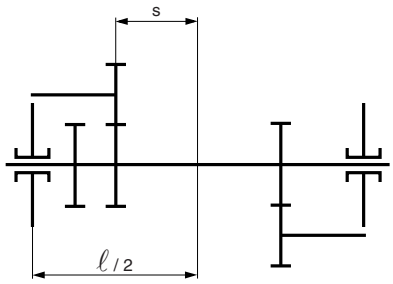	– 0,6	– 1,0

(1) The following limitation is to be verified except when helix correction is applied:
$s / \ell < 0,3$

(2) No stiffening is assumed when $d_1 / d_{sh} < 1,15$ or when the pinion is keyed or shrinked to the shaft.

Table 14 : Transverse load factors $K_{H\alpha}$ and $K_{F\alpha}$

	Factors $K_{H\alpha}$ and $K_{F\alpha}$	Limitations
$\varepsilon_\gamma \le 2$	$K_{H\alpha} = K_{F\alpha} = \frac{\varepsilon_\gamma}{2}\left[0{,}9 + 0{,}4\,\frac{c_{\gamma\alpha}(f_{pb} - y_\alpha)}{F_{tH}/b}\right]$	$\frac{\varepsilon_\gamma}{\varepsilon_\alpha Z_\varepsilon^2} \ge K_{H\alpha} \ge 1$
$\varepsilon_\gamma > 2$	$K_{H\alpha} = K_{F\alpha} = 0{,}9 + 0{,}4\sqrt{\frac{2(\varepsilon_\gamma - 1)}{\varepsilon_\gamma}}\frac{c_{\gamma\alpha}(f_{pb} - y_\alpha)}{F_{tH}/b}$	$\frac{\varepsilon_\gamma}{0{,}25\,\varepsilon_\alpha + 0{,}75} \ge K_{F\alpha} \ge 1$

Note 1:

$c_{\gamma\alpha}$: Mesh stiffness, in N/mm.µm, defined in Tab 9

f_{pb} : Larger value of the base pitch deviation of pinion or wheel, in µm.

Default value: $f_{pb} = 0{,}3\,(m_n + 0{,}4\,|d_{bi}|^{0,5} + 4) \cdot 2^{0,5\,(Q_i - 5)}$

In case of optimum profile correction, f_{pb} is to be replaced by f_{pb} / 2

y_α : Running-in allowance, in µm, defined in Tab 15

F_{tH} : Determinant tangential load in transverse plane, in N:

$F_{tH} = F_t \cdot K_A \cdot K_V \cdot K_{H\beta}$

Table 15 : Running-in allowance y_α

Material	y_α, in µm	Limitations
St, St (cast), GTS (perl.), GGG (perl.), GGG (bai.), V, V (cast)	$y_\alpha = \frac{160}{\sigma_{H,\,lim}} f_{pb}$	• if 5 m/s < v ≤ 10 m/s: $y_\alpha \le 12800 / \sigma_{H,lim}$ • if 10 m/s < v: $y_\alpha \le 6400 / \sigma_{H,lim}$
GGG (ferr.), GG	$y_\alpha = 0{,}275\, f_{pb}$	• if 5 m/s < v ≤ 10 m/s: $y_\alpha \le 22$ • if 10 m/s < v: $y_\alpha \le 11$
Eh, IF, NT (nitr.), NV (nitr.), NV (nitrocar.)	$y_\alpha = 0{,}075\, f_{pb}$	$y_\alpha \le 3$

Note 1: f_{pb} is defined in Tab 14 and $\sigma_{H,lim}$ is defined in [2.4.9].

Note 2: When material of the pinion differs from that of the wheel: $y_\alpha = 0{,}5\,(y_{\alpha 1} + y_{\alpha 2})$

2.4 Calculation of surface durability

2.4.1 General

The criterion for surface durability is based on the contact stress (hertzian pressure) σ_H on the pitch point or at the inner point of single pair contact.

The contact stress σ_H, defined in [2.4.2], is not to exceed the permissible contact stress σ_{HP} defined in [2.4.8].

2.4.2 Contact stress σ_H

The contact stress σ_H, in N/mm², is to be determined as follows.

- for the pinion:

$$\sigma_H = Z_B \cdot \sigma_{H0}\sqrt{K_A \cdot K_\gamma \cdot K_V \cdot K_{H\beta} \cdot K_{H\alpha}}$$

- for the wheel:

$$\sigma_H = Z_D \cdot \sigma_{H0}\sqrt{K_A \cdot K_\gamma \cdot K_V \cdot K_{H\beta} \cdot K_{H\alpha}}$$

where:

Z_B, Z_D : Single pair mesh factors, respectively for pinion and for wheel, defined in [2.4.3]

K_A : Application factor (see [2.3.2])

K_γ : Load sharing factor (see [2.3.3])

K_V : Dynamic factor (see [2.3.4])

$K_{H\beta}$: Face load distribution factor (see [2.3.5])

$K_{H\alpha}$: Transverse load distribution factor (see [2.3.6])

$$\sigma_{H0} = Z_H \cdot Z_E \cdot Z_\varepsilon \cdot Z_\beta\sqrt{\frac{F_t}{d_1 \cdot b} \cdot \frac{|u| + 1}{|u|}}$$

with:

Z_H : Zone factor, defined in [2.4.4]

Z_E : Elasticity factor, defined in [2.4.5]

Z_ε : Contact ratio factor, defined in [2.4.6]

Z_β : Helix angle factor, defined in [2.4.7].

2.4.3 Single pair mesh factors Z_B and Z_D

The single pair mesh factors Z_B for pinion and Z_D for wheel account for the influence on contact stresses of the tooth flank curvature at the inner point of single pair contact in relation to Z_H. These factors transform the contact stress determined at the pitch point to contact stresses, considering the flank curvature at the inner point of single pair contact.

Z_B and Z_D are to be determined as follows:

a) for spur gears ($\varepsilon_\beta = 0$):

- $Z_B = M_1$ or 1, whichever is the greater, with:

$$M_1 = \frac{\tan\alpha_{tw}}{\sqrt{\left[\sqrt{\left(\frac{d_{a1}}{d_{b1}}\right)^2 - 1} - \frac{2\pi}{z_1}\right] \cdot \left[\sqrt{\left(\frac{d_{a2}}{d_{b2}}\right)^2 - 1} - (\varepsilon_\alpha - 1)\frac{2\pi}{z_2}\right]}}$$

- $Z_D = M_2$ or 1, whichever is the greater, with:

$$M_2 = \frac{\tan\alpha_{tw}}{\sqrt{\left[\sqrt{\left(\frac{d_{a2}}{d_{b2}}\right)^2 - 1} - \frac{2\pi}{z_2}\right] \cdot \left[\sqrt{\left(\frac{d_{a1}}{d_{b1}}\right)^2 - 1} - (\varepsilon_\alpha - 1)\frac{2\pi}{z_1}\right]}}$$

b) for helical gears:

- if $\varepsilon_\beta \geq 1$:

  $Z_B = Z_D = 1$

- if $\varepsilon_\beta < 1$:

  $Z_B = M_1 - \varepsilon_\beta (M_1 - 1)$ or 1, whichever is the greater

  $Z_D = M_2 - \varepsilon_\beta (M_2 - 1)$ or 1, whichever is the greater.

Note 1: For gears with $\varepsilon_\alpha \leq 1$, a specific analysis of the decisive contact stress along the path of contact is necessary.

Note 2: For internal gears, $Z_D = 1$.

2.4.4 Zone factor Z_H

The zone factor Z_H accounts for the influence on the hertzian pressure of tooth flank curvature at the pitch point and transforms the tangential force at the reference cylinder to normal force at the pitch cylinder.

Z_H is to be determined as follows:

$$Z_H = \sqrt{\frac{2 \cdot \cos\beta_b \cdot \cos\alpha_{tw}}{(\cos\alpha_t)^2 \cdot \sin\alpha_{tw}}}$$

2.4.5 Elasticity factor Z_E

The elasticity factor Z_E accounts for the influence of the metal properties (module of elasticity E and Poisson's ratio ν) on the hertzian pressure.

For steel gears: $Z_E = 189{,}8\ N^{1/2}/mm$.

Note 1: Refer to ISO 6336-2 for other materials.

2.4.6 Contact ratio factor Z_ε

The contact ratio factor Z_ε accounts for the influence of the transverse contact ratio and the overlap ratio on the specific surface load of gears.

Z_ε is to be determined as follows:

a) for spur gears ($\varepsilon_\beta = 0$):

$$Z_\varepsilon = \sqrt{\frac{4 - \varepsilon_\alpha}{3}}$$

b) for helical gears:

- for $\varepsilon_\beta \geq 1$:

$$Z_\varepsilon = \sqrt{\frac{1}{\varepsilon_\alpha}}$$

- for $\varepsilon_\beta < 1$:

$$Z_\varepsilon = \sqrt{\frac{4 - \varepsilon_\alpha}{3} \cdot (1 - \varepsilon_\beta) + \frac{\varepsilon_\beta}{\varepsilon_\alpha}}$$

2.4.7 Helix angle factor Z_β

The helix angle factor Z_β accounts for the influence of helix angle on the surface durability, allowing for such variables as the distribution of the load along the lines of contact.

Z_β is to be determined as follows:

$$Z_\beta = \frac{1}{\sqrt{\cos\beta}}$$

2.4.8 Permissible contact stress σ_{HP}

The permissible contact stress σ_{HP}, in N/mm², is to be determined separately for pinion and wheel, using the following formula:

$$\sigma_{HP} = \frac{\sigma_{H,lim}}{S_H} \cdot Z_{NT} \cdot Z_L \cdot Z_V \cdot Z_R \cdot Z_W \cdot Z_X$$

where:

$\sigma_{H,lim}$: Endurance limit for contact stress, defined in [2.4.9]

Z_{NT} : Life factor for contact stress, defined in [2.4.10]

Z_L, Z_V, Z_R: Lubrication, speed and roughness factors, respectively, defined in [2.4.11]

Z_W : Hardness ratio factor, defined in [2.4.12]

Z_X : Size factor for contact stress, defined in [2.4.13]

S_H : Safety factor for contact stress, defined in [2.4.14].

2.4.9 Endurance limit for contact stress $\sigma_{H,lim}$

The endurance limit for contact stress $\sigma_{H,lim}$ is the limit of repeated contact stress which can be permanently endured.

The values to be adopted for $\sigma_{H,lim}$ are given, in N/mm², with the following formula, in relation to the type of steel employed and the heat treatment performed:

$\sigma_{H,lim} = A\,x + B$

where:

A, B : Constants determined in Tab 16

x : Surface hardness HB or HV, in N/mm². The limitations x_{min} and x_{max} on surface hardness are indicated in Tab 16.

Special consideration will be given to other values of $\sigma_{H,lim}$, depending on the material category and specification of the steel employed.

Table 16 : Constants A and B and limitations on surface hardness HB or HV

	Quality **(1)**	A	B (N/mm²)	Hardness	x_{min} (N/mm²)	x_{max} (N/mm²)
St	ML	1,000	190	HB	110	210
	MQ	1,000	190	HB	110	210
	ME	1,520	250	HB	110	210
St (cast)	ML	0,986	131	HB	140	210
	MQ	0,986	131	HB	140	210
	ME	1,143	237	HB	140	210
GTS (perl.)	ML	1,371	143	HB	135	250
	MQ	1,371	143	HB	135	250
	ME	1,333	267	HB	175	250
GGG	ML	1,434	211	HB	175	300
	MQ	1,434	211	HB	175	300
	ME	1,500	250	HB	200	300
GG	ML	1,033	132	HB	150	240
	MQ	1,033	132	HB	150	240
	ME	1,465	122	HB	175	275
V (carbon steels)	ML	0,963	283	HV	135	210
	MQ	0,925	360	HV	135	210
	ME	0,838	432	HV	135	210

(1) The requirements for each material quality are defined in ISO 6336-5.

	Quality (1)	A	B (N/mm²)	Hardness	x_{min} (N/mm²)	x_{max} (N/mm²)
V (alloy steels)	ML	1,313	188	HV	200	360
	MQ	1,313	373	HV	200	360
	ME	2,213	260	HV	200	390
V (cast, carbon steels)	ML	0,831	300	HV	130	215
	MQ	0,831	300	HV	130	215
	ME	0,951	345	HV	130	215
V (cast, alloy steels)	ML	1,276	298	HV	200	360
	MQ	1,276	298	HV	200	360
	ME	1,350	356	HV	200	360
Eh	ML	0,000	1300	HV	600	800
	MQ	0,000	1500	HV	660	800
	ME	0,000	1650	HV	660	800
IF	ML	0,740	602	HV	485	615
	MQ	0,541	882	HV	500	615
	ME	0,505	1013	HV	500	615
NT (nitr.)	ML	0,000	1125	HV	650	900
	MQ	0,000	1250	HV	650	900
	ME	0,000	1450	HV	650	900
NV (nitr.)	ML	0,000	788	HV	450	650
	MQ	0,000	998	HV	450	650
	ME	0,000	1217	HV	450	650
NV (nitrocar.)	ML	0,000	650	HV	300	650
	MQ	1,167	425	HV	300	450
	ME	1,167	425	HV	300	450
(1) The requirements for each material quality are defined in ISO 6336-5.						

2.4.10 Life factor for contact stress Z_{NT}

The life factor Z_{NT} accounts for the influence of limited service life on the permissible contact stress.

Some values of Z_{NT} are given for information in Tab 17.

The value of Z_{NT} to be used will be given special consideration by the Society, depending on the equipment's arrangement and use.

Table 17 : Life factor Z_{NT}

Material	Number of load cycles N_L	Z_{NT}
St, St (cast), GTS (perl.), GGG (perl.), GGG (bai.), V, V (cast), Eh, IF	$N_L \leq 10^5$ or static	1,6
	$N_L = 5 \cdot 10^7$	1,0
	$N_L = 10^9$	1,0
	$N_L = 10^{10}$	0,85 up to 1,0
GGG (ferr.), GG, NT (nitr.), NV (nitr.)	$N_L \leq 10^5$ or static	1,3
	$N_L = 2 \cdot 10^6$	1,0
	$N_L = 10^{10}$	0,85 up to 1,0
NV (nitrocar.)	$N_L \leq 10^5$ or static	1,1
	$N_L = 2 \cdot 10^6$	1,0
	$N_L = 10^{10}$	0,85 up to 1,0

2.4.11 Lubricant factor Z_L , speed factor Z_V and roughness factor Z_R

The lubricant factor Z_L accounts for the influence of the type of the lubricant and the influence of its viscosity, the speed factor Z_V accounts for the influence of the pitch line velocity, and the roughness factor Z_R accounts for the influence of the surface roughness on the surface endurance capacity.

These factors are to be determined as follows:

a) Lubricant factor Z_L

$$Z_L = C_{ZL} + \frac{4 \cdot (1{,}0 - C_{ZL})}{\left(1{,}2 + \frac{134}{\nu_{40}}\right)^2}$$

where:

C_{ZL} : Constant for lubricant factor, equal to:

- for $\sigma_{H,lim} < 850$ N/mm²:
  $C_{ZL} = 0{,}83$
- if 850 N/mm² $\leq \sigma_{H,lim} \leq 1200$ N/mm²:
  $$C_{ZL} = \frac{\sigma_{H,lim}}{4375} + 0{,}6357$$
- if $\sigma_{H,lim} > 1200$ N/mm²:
  $C_{ZL} = 0{,}91$

b) Speed factor Z_V

$$Z_V = C_{ZV} + \frac{2 \cdot (1{,}0 - C_{ZV})}{\sqrt{0{,}8 + \frac{32}{\nu}}}$$

where:

C_{ZV} : Constant for speed factor, equal to:
$C_{ZV} = C_{ZL} + 0{,}02$

c) Roughness factor Z_R

$$Z_R = \left(\frac{3}{R_{Z10}}\right)^{C_{ZR}}$$

where:

R_{Z10} : Mean relative peak-to-valley roughness for the gear pair, in µm, equal to:

$$R_{Z10} = R_{Zf}\left(\frac{10}{\rho_{red}}\right)^{1/3}$$

ρ_{red} : Relative radius of curvature, in mm, equal to:

$$\rho_{red} = \frac{0{,}5 \cdot d_{b1} \cdot d_{b2} \cdot \tan\alpha_{wt}}{d_{b1} + d_{b2}}$$

d_b being taken negative for internal gears

R_{Zf} : Mean peak-to-valley flank roughness for the gear pair, in µm, equal to:

$$R_{Zf} = \frac{R_{Zf1} + R_{Zf2}}{2}$$

C_{ZR} : Constant for roughness factor, equal to:

- if $\sigma_{H,lim} < 850$ N/mm²:
  $C_{ZR} = 0{,}15$
- if 850 N/mm² $\leq \sigma_{H,lim} \leq 1200$ N/mm²:
  $$C_{ZR} = 0{,}32 - \frac{\sigma_{H,lim}}{5000}$$
- if $\sigma_{H,lim} > 1200$ N/mm²:
  $C_{ZR} = 0{,}08$

2.4.12 Hardness ratio factor Z_W

The hardness ratio factor Z_W accounts for the increase of the surface durability in the following cases:

a) Surface-hardened with through-hardened wheel

- if HB < 130:

$$Z_W = 1{,}2 \cdot \left(\frac{3}{R_{ZH}}\right)^{0{,}15}$$

- if $130 \le HB \le 470$:

$$Z_W = \left(1{,}2 - \frac{HB - 130}{1700}\right) \cdot \left(\frac{3}{R_{ZH}}\right)^{0{,}15}$$

- if $HB > 470$:

$$Z_W = \left(\frac{3}{R_{ZH}}\right)^{0{,}15}$$

where:

R_{ZH} : Equivalent roughness, in µm, equal to:

$$R_{ZH} = \frac{R_{Zf1}(10/\rho_{red})^{0{,}33} \cdot (R_{Zf1}/R_{Zf2})^{0{,}66}}{(\nu_{40} \cdot v/1500)^{0{,}33}}$$

ρ_{red} being the relative radius of curvature defined in [2.4.11].

b) Through-hardened pinion and wheel with pinion substantially harder than the wheel (in that case, the hardness factor is to be applied only to the wheel)

- if $HB_1 / HB_2 < 1{,}2$:

  $Z_W = 1{,}0$

- if $1{,}2 \le HB_1 / HB_2 \le 1{,}7$:

$$Z_W = 1 + \left(0{,}00898\,\frac{HB_1}{HB_2} - 0{,}00829\right) \cdot (u - 1{,}0)$$

- if $HB_1 / HB_2 > 1{,}7$:

  $Z_W = 1{,}0 + 0{,}00698\,(u - 1{,}0)$

Note 1: In any cases, $Z_W \ge 1$

Note 2: If $u > 20$, $u = 20$ is to be taken.

2.4.13 Size factor Z_X

The size factor Z_X accounts for the influence of tooth dimensions on permissible contact stress and reflects the non-uniformity of material properties.

Z_X is in general equal to 1.

The value of Z_X to be used will be given special consideration by the Society depending on the material.

2.4.14 Safety factor for contact stress S_H

The values to be adopted for safety factor for contact stress S_H are given in Tab 18.

Table 18 : Safety factor for contact stress S_H

Type of installation		S_H
Main gears (propulsion)	single machinery	1,25
	duplicate machinery	1,20
Auxiliary gears		1,15

2.5 Calculation of tooth bending strength

2.5.1 General

The criterion for the tooth root bending strength is based on the local tensile stress at the tooth root in the direction of the tooth height.

The tooth root bending stress σ_F, defined in [2.5.2], is not to exceed the permissible tooth root bending stress σ_{FP} defined in [2.5.8].

2.5.2 Tooth root bending stress σ_F

The tooth root bending stress σ_F is to be determined as follows:

$$\sigma_F = \frac{F_t}{b \cdot m_n} Y_F \cdot Y_S \cdot Y_\beta \cdot Y_B \cdot Y_{DT} \cdot K_A \cdot K_\gamma \cdot K_V \cdot K_{F\beta} \cdot K_{F\alpha}$$

where:

Y_F : Tooth form factor, defined in [2.5.3]

Y_S : Stress correction factor, defined in [2.5.4]

Y_β : Helix angle factor, defined in [2.5.5]

Y_B : Rim thickness factor, defined in [2.5.6]

Y_{DT} : Deep tooth factor, defined in [2.5.7]

K_A : Application factor (see [2.3.2])

K_γ : Load sharing factor (see [2.3.3])

K_V : Dynamic factor (see [2.3.4])

$K_{F\beta}$: Face load distribution factor (see [2.3.5])

$K_{F\alpha}$: Transverse load distribution factor (see [2.3.6]).

When a shot peening treatment of the tooth root is applied according to a process agreed by the Society, a reduction of the bending stress σ_F (depending on the material category, but without being over 10%) could be taken in consideration only for carburized case-hardened steel gears.

2.5.3 Tooth form factor Y_F (method B)

The tooth form factor Y_F takes into account the effect of the tooth form on the nominal bending stress, assuming the load applied at the outer point of a single pair tooth contact.

In the case of helical gears, the form factors are to be determined in the normal section, i.e. for the virtual spur gear with the virtual number of teeth z_n.

Y_F is to be determined separately for the pinion and the wheel, using the following formula:

$$Y_F = \frac{6\frac{h_{Fe}}{m_n}\cos\alpha_{Fen}}{\left(\frac{s_{Fn}}{m_n}\right)^2\cos\alpha_n}$$

where:

h_{Fe} : Bending moment arm, in mm:

- for external gears:

$$\frac{h_{Fe}}{m_n} = \frac{1}{2}\left[(\cos\gamma_e - \sin\gamma_e\tan\alpha_{Fen})\frac{d_{en}}{m_n}\right] - \frac{1}{2}\left[z_n\cos\left(\frac{\pi}{3}-\theta\right) + \left(\frac{G}{\cos\theta} - \frac{\rho_{fPv}}{m_n}\right)\right]$$

- for internal gears:

$$\frac{h_{Fe}}{m_n} = \frac{1}{2}\left[(\cos\gamma_e - \sin\gamma_e\tan\alpha_{Fen})\frac{d_{en}}{m_n}\right] - \frac{1}{2}\left[z_n\cos\left(\frac{\pi}{6}-\theta\right) - \sqrt{3}\left(\frac{G}{\cos\theta} - \frac{\rho_{fPv}}{m_n}\right)\right]$$

s_{Fn} : Tooth root chord at the critical section, in mm:

- for external gears:

$$\frac{s_{Fn}}{m_n} = z_n\sin\left(\frac{\pi}{3}-\theta\right) + \sqrt{3}\left(\frac{G}{\cos\theta} - \frac{\rho_{fPv}}{m_n}\right)$$

- for internal gears:

$$\frac{s_{Fn}}{m_n} = z_n\sin\left(\frac{\pi}{6}-\theta\right) + \left(\frac{G}{\cos\theta} - \frac{\rho_{fPv}}{m_n}\right)$$

ρ_{fPv} : Fillet radius at the basic rack, in mm:

- for external gears:

$$\rho_{fPv} = \rho_{a0}$$

- for internal gears:

$$\rho_{fPv} = \rho_{a0} + m_n \cdot \frac{(x_2 + h_{fP}/m_n - \rho_{a0}/m_n)^{1,95}}{3,156 \cdot 1,036^{z_2}}$$

G : Parameter defined by the following formula:

$$G = \frac{\rho_{fPv}}{m_n} - \frac{h_{fP}}{m_n} + x$$

θ : Parameter defined by the following formula:

$$\theta = \frac{2G}{z_n}\tan\theta - H$$

This transcendental equation is to be calculated by iteration

H : Parameter defined by the following formulae:

- for external gears:

$$H = \frac{2}{z_n}\left(\frac{\pi}{2} - \frac{E}{m_n}\right) - \frac{\pi}{3}$$

- for internal gears:

$$H = \frac{2}{z_n}\left(\frac{\pi}{2} - \frac{E}{m_n}\right) - \frac{\pi}{6}$$

E : Parameter defined by the following formula:

$$E = \frac{\pi}{4}m_n - h_{fP}\tan\alpha_n + \frac{s_{pr}}{\cos\alpha_n} - (1 - \sin\alpha_n)\frac{\rho_{a0}}{\cos\alpha_n}$$

s_{pr} : Residual fillet undercut, in mm:

$s_{pr} = pr - q$

The parameters of the virtual gears are defined as follows:

α_{Fen} : Load direction angle:

$\alpha_{Fen} = \alpha_{en} - \gamma_e$

γ_e : Parameter defined by the following formula:

$$\gamma_e = \frac{0{,}5\ \pi + 2 \cdot \tan\alpha_n \cdot x}{z_n} + \mathrm{inv}\alpha_n - \mathrm{inv}\alpha_{en}$$

with inv, involute function, equal to:

inv $\alpha = \tau\alpha\mathrm{v}\ \alpha - \alpha$

α_{en} : Form factor pressure angle:

$$\cos\alpha_{en} = \frac{d_{bn}}{d_{en}}$$

d_{bn} : Virtual base diameter, in mm:

$d_{bn} = d_n \cos\alpha_n$

with:

d_n : Virtual reference diameter, in mm:

$$d_n = \frac{d}{(\cos\beta_b)^2} = m_n z_n$$

d_{en} : Parameter defined by the following formula:

$$d_{en} = \frac{2z}{|z|}\sqrt{\left[\frac{\sqrt{d_{an}^2 - d_{bn}^2}}{2} - \frac{\pi d\cos\beta\cos\alpha_n}{|z|}(\varepsilon_{\alpha n} - 1)\right]^2 + \frac{d_{bn}^2}{4}}$$

with:

d_{an} : Virtual tip diameter, in mm:

$d_{an} = d_n + d_a - d$

$\varepsilon_{\alpha n}$: Virtual transverse contact ratio:

$$\varepsilon_{\alpha n} = \frac{\varepsilon_\alpha}{(\cos\beta_b)^2}$$

2.5.4 Stress correction factor Y_S (method B)

The stress correction factor Y_S is used to convert the nominal bending stress to local tooth root stress, assuming the load is applied at the outer point of a single pair tooth contact. It takes into account the influence of:

- the bending moment
- the proximity of the load application to the critical section.

Y_S is to be determined as follows:

$$Y_S = (1{,}2 + 0{,}13L)q_s^{\left(\frac{1}{1{,}21 + (2{,}3/L)}\right)}$$

where:

$$L = \frac{s_{Fn}}{h_{Fe}}$$

with s_{Fn} and h_{Fe} defined in [2.5.3]

q_s : Notch parameter:

$$q_s = \frac{s_{Fn}}{2\rho_F}$$

with s_{Fn} defined in [2.5.3]

Note 1: The notch parameter should be within the range: $1 \le q_s < 8$

ρ_F : Radius of root fillet, in mm:

$$\frac{\rho_F}{m_n} = \frac{\rho_{fPv}}{m_n} + \frac{2G^2}{\cos\theta \cdot (|z_n| \cdot \cos^2\theta - 2G)}$$

2.5.5 Helix angle factor Y_β

The helix angle factor Y_β converts the tooth root stress of a virtual spur gear to that of the corresponding helical gear, taking into account the oblique orientation of the lines of mesh contact.

Y_β is to be determined as follows:

if $\varepsilon_\beta \le 1$ and $\beta \le 30°$: $Y_\beta = 1 - \varepsilon_\beta \beta / 120$

if $\varepsilon_\beta \le 1$ and $\beta > 30°$: $Y_\beta = 1 - 0{,}25\, \varepsilon_\beta$

if $\varepsilon_\beta > 1$ and $\beta \le 30°$: $Y_\beta = 1 - \beta / 120$

if $\varepsilon_\beta > 1$ and $\beta > 30°$: $Y_\beta = 0{,}75$

2.5.6 Rim thickness factor Y_B

The rim thickness factor Y_B is a simplified factor used to de-rate thin rimmed gears. For critically loaded applications, this method should be replaced by a more comprehensive analysis.

Y_B is to be determined as follows:

- for external gears:
  - when $s_R / h \ge 1{,}2$:
    $Y_B = 1{,}0$
  - when $1{,}2 > s_R / h > 0{,}5$:

$$Y_B = 1{,}6 \ \ln\left(2{,}242 \frac{h}{s_R}\right)$$

Note 1: $s_R / h \le 0{,}5$ is to be avoided.

- for internal gears:
  - when $s_R / m_n \ge 3$:
    $Y_B = 1{,}0$
  - when $3 > s_R / m_n > 1{,}75$:

$$Y_B = 1{,}15 \ \ln\left(8{,}324 \frac{m_n}{s_R}\right)$$

Note 2: $s_R / h \le 1{,}75$ is to be avoided.

2.5.7 Deep tooth factor Y_{DT}

The deep tooth factor Y_{DT} adjusts the tooth root stress to take into account high precision gears and contact ratios within the range $2{,}05 < \varepsilon_{\alpha n} \le 2{,}5$ (where $\varepsilon_{\alpha n}$ is defined in [2.5.3]).

Y_{DT} is to be determined as follows:

- if $\varepsilon_{\alpha n} > 2{,}5$ and $A \le 4$: $Y_{DT} = 0{,}7$
- if $2{,}05 < \varepsilon_{\alpha n} \le 2{,}5$ and $A \le 4$: $Y_{DT} = -0{,}666\, \varepsilon_{\alpha n} + 2{,}366$
- otherwise: $Y_{DT} = 1{,}0$

2.5.8 Permissible tooth root bending stress σ_{FP}

The permissible tooth root bending stress σ_{FP} is to be determined separately for pinion and for wheel, using the following formula:

$$\sigma_{FP} = \frac{\sigma_{FE}}{S_F} \cdot Y_d \cdot Y_{NT} \cdot Y_{\delta relT} \cdot Y_{RrelT} \cdot Y_X$$

where:

σ_{FE} : Endurance limit for tooth root bending stress, defined in [2.5.9]

Y_d : Design factor, defined in [2.5.10]

Y_{NT} : Life factor for tooth root bending stress, defined in [2.5.11]

$Y_{\delta relT}$: Relative notch sensitive factor, defined in [2.5.12]

Y_{RrelT} : Relative surface factor, defined in [2.5.13]

Y_X : Size factor for tooth root bending stress, defined in [2.5.14]

S_F : Safety factor for tooth root bending stress, defined in [2.5.15].

2.5.9 Endurance limit for tooth root bending stress σ_{FE}

The endurance limit for tooth root bending stress σ_{FE} is the local tooth root stress which can be permanently endured.

The values to be adopted for σ_{FE} are given, in N/mm², with the following formula, in relation to the type of steel employed and the heat treatment performed:

$\sigma_{FE} = A\,x + B$

where:

A, B : Constants determined in Tab 19

x : Surface hardness HB or HV, in N/mm². The limitations x_{min} and x_{max} on surface hardness are indicated in Tab 19.

Special consideration will be given to other values of σ_{FE}, depending on the material category and specification of the steel employed.

Table 19 : Constants A and B and limitations on surface hardness HB or HV

Material	Quality (1)	A	B (N/mm²)	Hardness	x_{min} (N/mm²)	x_{max} (N/mm²)
St	ML	0,910	138	HB	110	210
	MQ	0,910	138	HB	110	210
	ME	0,772	294	HB	110	210
St (cast)	ML	0,626	124	HB	140	210
	MQ	0,626	124	HB	140	210
	ME	0,508	274	HB	140	210
GTS (perl.)	ML	0,700	154	HB	135	250
	MQ	0,700	154	HB	135	250
	ME	0,806	256	HB	175	250
GGG	ML	0,700	238	HB	175	300
	MQ	0,700	238	HB	175	300
	ME	0,760	268	HB	200	300
GG	ML	0,512	16	HB	150	240
	MQ	0,512	16	HB	150	240
	ME	0,400	106	HB	175	275
V (carbon steels)	ML	0,500	216	HV	115	215
	MQ	0,480	326	HV	115	215
	ME	0,566	404	HV	115	215
V (alloy steels)	ML	0,846	208	HV	200	360
	MQ	0,850	374	HV	200	360
	ME	0,716	462	HV	200	390
V (cast, carbon steels)	ML	0,448	234	HV	130	215
	MQ	0,448	234	HV	130	215
	ME	0,572	334	HV	130	215
V (cast, alloy steels)	ML	0,728	322	HV	200	360
	MQ	0,728	322	HV	200	360
	ME	0,712	372	HV	200	360
Eh	ML	0,000	624	HV	600	800
	MQ, > 25HRC lower	0,000	850	HV	660	800
	MQ, > 25HRC upper	0,000	922	HV	660	800
	MQ, > 35 HRC	0,000	1000	HV	660	800
	ME	0,000	1050	HV	660	800

(1) The requirements for each material quality are defined in ISO 6336-5.

Material	Quality (1)	A	B (N/mm²)	Hardness	x_{min} (N/mm²)	x_{max} (N/mm²)
IF	ML	0,610	152	HV	485	615
	MQ	0,276	580	HV	500	570
	ME	0,542	474	HV	500	615
NT (nitr.)	ML	0,000	540	HV	650	900
	MQ	0,000	840	HV	650	900
	ME	0,000	936	HV	650	900
NV (nitr.)	ML	0,000	516	HV	450	650
	MQ	0,000	726	HV	450	650
	ME	0,000	864	HV	450	650
NV (nitrocar.)	ML	0,000	448	HV	300	650
	MQ	1,306	188	HV	300	450
	ME	1,306	188	HV	300	450
(1) The requirements for each material quality are defined in ISO 6336-5.						

2.5.10 Design factor Y_d

The design factor Y_d takes into account the influence of load reversing and shrink fit prestressing on the tooth root strength.

Y_d is to be determined as follows:

- for gears with occasional part load in reverse direction, such as main wheel in reverse gearboxes:

  $Y_d = 0,9$
- for idler gears (driven and driving tooth for each cycle i.e. alternating load):

  $Y_d = 0,7$
- for shrunk on pinions and wheel rims:

  $Y_d = 1 - \sigma_T / \sigma_{FE}$

  with:

  σ_{FE} : Endurance limit for tooth root bending stress (see [2.5.9])

  σ_T : Tangential stress induced by the shrinkage at the tooth root diameter.

  The maximum equivalent stress induced by the shrinkage in the inner diameter of the rim is not to exceed 80% of the yield strength of the rim material.
- otherwise:

  $Y_d = 1,0$

2.5.11 Life factor Y_{NT}

The life factor Y_{NT} accounts for the influence of limited service life on the permissible tooth root bending stress.

Some values of Y_{NT} are given in Tab 20 for information.

The value Y_{NT} to be used will be given special consideration by the Society depending on the equipment's arrangement and use.

Table 20 : Life factor Y_{NT}

Material	Number of load cycles N_L	Y_{NT}
St, St (cast), GTS (perl.), GGG (perl.), GGG (bai.), V, V (cast), Eh, IF	$N_L \le 10^3$ or static	2,5
	$N_L = 3 \cdot 10^6$	1,0
	$N_L = 10^{10}$	0,85 up to 1,0
GGG (ferr.), GG, NT (nitr.), NV (nitr.)	$N_L \le 10^3$ or static	1,6
	$N_L = 3 \cdot 10^6$	1,0
	$N_L = 10^{10}$	0,85 up to 1,0
NV (nitrocar.)	$N_L \le 10^3$ or static	1,1
	$N_L = 3 \cdot 10^6$	1,0
	$N_L = 10^{10}$	0,85 up to 1,0

2.5.12 Relative notch sensitivity factor $Y_{\delta rel\,T}$

The relative notch sensitivity factor $Y_{\delta relT}$ indicates the extent to which the theoretically concentrated stress lies above the fatigue endurance limit.

$Y_{\delta relT}$ is to be determined as follows:

$$Y_{\delta relT} = \frac{1 + \sqrt{\rho' \cdot 0{,}2} \cdot (1 + 2q_s)}{1 + \sqrt{\rho' \cdot 1{,}2}}$$

where:

q_s : Notch parameter, as defined in [2.5.4]

ρ' : Slip-layer thickness, in mm, defined in Tab 21.

Table 21 : Slip-layer thickness ρ'

Material	ρ' (mm)
GG, R_m = 150 N/mm²	0,3124
GG, GGG (ferr.) R_m = 300 N/mm²	0,3095
NT, NV	0,1005
St, R_e = 300 N/mm²	0,0833
St, R_e = 400 N/mm²	0,0445
V, GTS, GGG (perl. bai.), R_e = 500 N/mm²	0,0281
V, GTS, GGG (perl. bai.), R_e = 600 N/mm²	0,0194
V, GTS, GGG (perl. bai.), R_e = 800 N/mm²	0,0064
V, GTS, GGG (perl. bai.), R_e = 1000 N/mm²	0,0014
Eh, IF	0,0030

2.5.13 Relative surface factor $Y_{Rrel\,T}$

The relative surface factor $Y_{Rrel\,T}$ takes into account the dependence of the root strength on the surface condition on the tooth root fillet (roughness).

The values to be adopted for $Y_{Rrel\,T}$ are given in Tab 22 in relation to the type of steel employed.

They are valid only when scratches or similar defects deeper than 12 R_a are not present.

Table 22 : Relative surface factor $Y_{Rrel\,T}$

Material	Y_{RrelT}	
	$R_z < 1$	$1 \le R_z \le 40$
V, V (cast), GGG (perl.), GGG (bai.), Eh, IF	1,120	$1{,}674 - 0{,}529\,(R_z + 1)^{0{,}1}$
St, St (cast)	1,070	$5{,}306 - 4{,}203\,(R_z + 1)^{0{,}01}$
GG, GGG (ferr.), NT, NV	1,025	$4{,}299 - 3{,}259\,(R_z + 1)^{0{,}0058}$
Note 1: R_z : Mean peak-to-valley roughness, in µm: $R_z = 6\,R_a$ with R_a : Arithmetic mean roughness.		

2.5.14 Size factor Y_X

The size factor Y_X takes into account the decrease of the strength with increasing size.

The values to be adopted for Y_X are given in Tab 23 in relation to the type of steel employed and the value of the normal module m_n.

Table 23 : Size factor Y_X

Material	Normal module	Y_X
St, V, V (cast), GGG (perl.), GGG (bai.), GTS (perl.)	$m_n \le 5$	1,00
	$5 < m_n < 30$	$1,03 - 0,006\ m_n$
	$m_n \ge 30$	0,85
Eh, IF, NT, NV	$m_n \le 5$	1,00
	$5 < m_n < 25$	$1,05 - 0,01\ m_n$
	$m_n \ge 25$	0,80
GG, GGG (ferr.)	$m_n \le 5$	1,00
	$5 < m_n < 25$	$1,075 - 0,015\ m_n$
	$m_n \ge 25$	0,70

2.5.15 Safety factor for tooth root bending stress S_F

The values to be adopted for the safety factor for tooth root bending stress S_F are given in Tab 24.

Table 24 : Safety factor for tooth root bending stress S_F

Type of installation		S_F
Main gears (propulsion)	single machinery	1,60
	duplicate machinery	1,55
Auxiliary gears	single machinery	1,45
	duplicate machinery	1,40

2.6 Calculation of scuffing resistance

2.6.1 General

The following calculations are requested for equipment running in supercritical domain, i.e. when N > 1,5 (see [2.3.4]).

The criterion for scuffing resistance is based on the calculation of the flash temperature method. According to this method, the risk of scuffing is assessed as a function of the properties of gear material, the lubricant characteristics, the surface roughness of tooth flanks, the sliding velocities and the load.

The interfacial contact temperatures are calculated as the sum of the interfacial bulk temperature of the moving interface and the fluctuating flash temperature of the moving faces in contact.

The maximum value of the interfacial contact temperature reduced by oil temperature is not to exceed 0,8 times the scuffing temperature reduced by oil temperature:

$(\Theta_{B,Max} - \Theta_{oil}) \le 0,8\ (\Theta_S - \Theta_{oil})$

where:

$\Theta_{B,Max}$: Maximum contact temperature along the path of contact, in °C, defined in [2.6.2]

Θ_{oil} : Oil temperature, in °C

Θ_S : Scuffing temperature, in °C, defined in [2.6.11].

Additionally, the difference between the scuffing temperature and the contact temperature along the path is not to be below 30°C:

$(\Theta_S - \Theta_{B,Max}) \ge 30°C$

Other methods of determination of the scuffing resistance could be accepted by the Society.

2.6.2 Contact temperature Θ_B

The maximum contact temperature $\Theta_{B,Max}$ along the path of contact, in °C, is calculated as follows:

$\Theta_{B,Max} = \Theta_{Mi} + \Theta_{fl,Max}$

where:

Θ_{Mi} : Interfacial bulk temperature, in °C, defined in [2.6.10]

$\Theta_{fl,Max}$: Maximum flash temperature along the path of contact, in °C, defined in [2.6.3].

The flash temperature should be calculated on at least ten points along the path of contact and the maximum of these values has to be used for the calculation of maximum contact temperature.

2.6.3 Flash temperature Θ_{fl}

The flash temperature Θ_{fl} at any point along the path of contact, in °C, is calculated with the following formula:

$$\Theta_{fl} = \mu_m \cdot X_M \cdot X_J \cdot X_G \cdot (X_\Gamma \cdot w_{Bt})^{0,75} \cdot \frac{v^{0,5}}{a^{0,25}}$$

where:

μ_m : Mean coefficient of friction, defined in [2.6.4]

X_M : Thermo-elastic factor, in $K \cdot N^{-3/4} \cdot s^{-1/2} \cdot m^{-1/2} \cdot mm$, defined in [2.6.5]

X_J : Approach factor, defined in [2.6.6]

X_G : Geometry factor, defined in [2.6.7]

X_Γ : Load sharing factor, defined in [2.6.8]

w_{Bt} : Transverse unit load, in N/mm, defined in [2.6.9].

2.6.4 Mean coefficient of friction μ_m

An estimation of the mean coefficient of friction μ_m of common working conditions could be used with the following formula:

$$\mu_m = 0,06 \cdot \left(\frac{w_{Bt}}{v_{g\Sigma C} \cdot \rho_{relC}}\right)^{0,2} \cdot X_L \cdot X_R$$

where:

w_{Bt} : Transverse unit load, in N/mm, defined in [2.6.9]

$v_{g\Sigma C}$: Sum of tangential velocities in pitch point, in m/s:

$v_{g\Sigma C} = 2\ v \sin \alpha_{tw}$

with v not taken greater than 50 m/s

ρ_{relC} : Transverse relative radius of curvature, in mm:

$$\rho_{relC} = \frac{u}{(1+u)^2} \cdot a \cdot \sin\alpha_{tw}$$

X_L : Lubricant factor, given in Tab 25

X_R : Roughness factor, equal to:

$$X_R = \left(\frac{R_{zf1} + R_{zf2}}{2}\right)^{0,25}$$

Table 25 : Lubricant factor X_L

Type of lubricant	X_L **(1)**
Mineral oils	$X_L = 1,0\ \eta_{oil}^{-0,05}$
Water soluble polyglycols	$X_L = 0,6\ \eta_{oil}^{-0,05}$
Non water soluble polyglycols	$X_L = 0,7\ \eta_{oil}^{-0,05}$
Polyalfaolefins	$X_L = 0,8\ \eta_{oil}^{-0,05}$
Phosphate esters	$X_L = 1,3\ \eta_{oil}^{-0,05}$
Traction fluids	$X_L = 1,5\ \eta_{oil}^{-0,05}$
(1) η_{oil} is the dynamic viscosity at oil temperature Θ_{oil}.	

2.6.5 Thermo-elastic factor X_M

The thermo-elastic factor X_M accounts for the influence of the material properties of pinion and wheel:

$$X_M = 1000 \frac{E_r^{0,25}}{B_M}$$

where:

E_r : Reduced modulus of elasticity, in N/mm²:

$$E_r = \frac{2}{(1-\nu_1)/E_1 + (1-\nu_2)/E_2}$$

E_1, E_2 : Moduli of elasticity of pinion and wheel material, in N/mm²

ν_1, ν_2 : Poisson's ratios of pinion and wheel material

B_M : Mean thermal contact coefficient, in $N \cdot mm^{-1/2} \cdot m^{-1/2} \cdot s^{-1/2} \cdot K^{-1}$, equal to:

$B_M = (B_{M1} + B_{M2}) / 2$

B_{Mi} : Thermal contact coefficient of pinion material (i = 1) and wheel material (i = 2), given in $N \cdot mm^{-1/2} \cdot m^{-1/2} \cdot s^{-1/2} \cdot K^{-1}$ and equal to:

$B_{Mi} = (0{,}001\ \lambda_{Mi}\ \rho_{Mi}\ c_{Mi})^{0,5}$

An average value of 435 $N \cdot mm^{-1/2} \cdot m^{-1/2} \cdot s^{-1/2} \cdot K^{-1}$ for martensitic steels could be used when thermo-elastic coefficient is not known

λ_{Mi} : Heat conductivity of pinion material (i = 1) and wheel material (i = 2), in $N \cdot s^{-1} \cdot K^{-1}$

ρ_{Mi} : Density of pinion material (i = 1) and wheel material (i = 2), in $kg \cdot m^{-3}$

c_{Mi} : Specific heat per unit mass of pinion material (i = 1) and wheel material (i = 2), in $J \cdot kg^{-1} \cdot K^{-1}$.

2.6.6 Approach factor X_J

The approach factor X_J takes empirically into account an increased scuffing risk in the beginning of the approach path, due to mesh starting without any previously built up oil film. The approach factor at any point should be calculated according to the following formula:

- when pinion drives the wheel:
  - for $\Gamma \geq 0$:

    $X_J = 1$
  - for $\Gamma < 0$, provided that $X_J \geq 1$:

    $$X_J = 1 + \frac{C_{eff} - C_{a2}}{50}\left(\frac{-\Gamma}{\Gamma_E - \Gamma_A}\right)^3$$
- when wheel drives the pinion:
  - for $\Gamma \leq 0$:

    $X_J = 1$
  - for $\Gamma > 0$, provided that $X_J \geq 1$:

    $$X_J = 1 + \frac{C_{eff} - C_{a1}}{50}\left(\frac{\Gamma}{\Gamma_E - \Gamma_A}\right)^3$$

where:

C_{eff} : Optimal tip relief, in µm:

$$C_{eff} = \frac{K_A K_\gamma F_t}{b \cdot \cos\alpha_t \cdot c_\gamma}$$

K_A : Application factor (see [2.3.2])

K_γ : Load sharing factor (see [2.3.3])

$c_{\alpha\gamma}$: Mesh stiffness, in N/(mm.µm) (see Tab 9)

C_{ai} : Tip relief of pinion or wheel, in µm

Γ : Parameter of the point on the line of action, defined in Tab 26

Γ_A : Parameter of the lower end point of the path of contact, defined in Tab 26

Γ_E : Parameter of the upper end point of the path of contact, defined in Tab 26.

Table 26 : Parameter Γ on the line of action

Point		Γ
A :	Lower end point of the path of contact	$\Gamma_A = -\frac{z_2}{z_1}\left(\frac{\tan\alpha_{a2}}{\tan\alpha_{wt}} - 1\right)$
AU :	Lower end point of buttressing effect	$\Gamma_{AU} = \Gamma_A + 0{,}2 \sin\beta_b$
AB :	Intermediate point between A and B	$\Gamma_{AB} = 0{,}5\ (\Gamma_A + \Gamma_B)$
B :	Lower point of single pair tooth contact	$\Gamma_B = \frac{\tan\alpha_{a1}}{\tan\alpha_{wt}} - 1 - \frac{2\pi}{z_1 \tan\alpha_{wt}}$
C :	Point with parameter equal to 0	$\Gamma_C = 0$
M :	Intermediate point between A and E	$\Gamma_M = 0{,}5\ (\Gamma_A + \Gamma_E)$
D :	Upper point of single pair tooth contact	$\Gamma_D = -\frac{z_2}{z_1}\left(\frac{\tan\alpha_{a2}}{\tan\alpha_{wt}} - 1\right) + \frac{2\pi}{z_1 \tan\alpha_{wt}}$
DE :	Intermediate point between D and E	$\Gamma_{DE} = 0{,}5\ (\Gamma_D + \Gamma_E)$
EU :	Upper end point of buttressing effect	$\Gamma_{EU} = \Gamma_E - 0{,}2 \sin\beta_b$
E :	Upper end point of the path of contact	$\Gamma_E = \frac{\tan\alpha_{a1}}{\tan\alpha_{wt}} - 1$

2.6.7 Geometry factor X_G

The geometry factor X_G is calculated according to the following conditions:

- for external gear pair:

$$X_G = 0{,}51\ X_{\alpha\beta}(u+1)^{0,5}\ \frac{\left|(1+\Gamma)^{0,5} - (1-\Gamma/u)^{0,5}\right|}{(1+\Gamma)^{0,25}\,(u-\Gamma)^{0,25}}$$

- for internal gear pair:

$$X_G = 0{,}51\ X_{\alpha\beta}(u-1)^{0,5}\ \frac{\left|(1+\Gamma)^{0,5} - (1+\Gamma/u)^{0,5}\right|}{(1+\Gamma)^{0,25}\,(u+\Gamma)^{0,25}}$$

where:

$X_{\alpha\beta}$: Angle factor, equal to:

$X_{\alpha\beta} = 1{,}22\ (\sin\alpha_{wt})^{0,25}\ (\cos\alpha_{wt})^{-0,5}\ (\cos\beta_b)^{0,25}$

Γ : Parameter of the point on the line of action, defined in Tab 26.

2.6.8 Load sharing factor X_Γ

The load sharing factor X_Γ accounts for the load sharing of succeeding pairs of meshing teeth. It is defined as a function of the value of the parameter in the line of action, increasing at the approach path of transverse double contact.

- for narrow helical gears ($\varepsilon_\gamma < 2$) with unmodified profiles:

  $X_\Gamma = X_{\Gamma,u}\ X_{but}$

- for narrow helical gears ($\varepsilon_\gamma < 2$) with profile modification:

  $X_\Gamma = X_{\Gamma,m}\ X_{but}$

- for wide helical gears ($\varepsilon_\gamma \geq 2$) with unmodified profiles:

$$X_\Gamma = \frac{1}{\varepsilon_\alpha} X_{but}$$

- for wide helical gears ($\varepsilon_\gamma \geq 2$) with profile modification:

  $X_\Gamma = X_{\Gamma,wm}\ X_{but}$

where:

X_{but} : Buttressing factor:

- for $\Gamma < \Gamma_{AU}$:

$$X_{but} = X_{butA} - \frac{\Gamma - \Gamma_A}{\Gamma_{AU} - \Gamma_A}(X_{butA} - 1)$$

- for $\Gamma_{AU} \leq \Gamma \leq \Gamma_{EU}$:

  $X_{but} = 1$

- for $\Gamma_{EU} < \Gamma$:

$$X_{but} = X_{butE} - \frac{\Gamma_E - \Gamma}{\Gamma_E - \Gamma_{EU}}(X_{butE} - 1)$$

Note 1: X_{but} is to be taken equal to 1 if $C_{ai} \geq C_{eff}$

X_{butA} , X_{butE} : Buttressing factors at, respectively, lower and upper end points of the path of contact:

$X_{butA} = X_{butE} = 1 + 0{,}3\ \varepsilon_\beta$, provided that

$X_{butA} = X_{butE} < 1{,}3$

$X_{\Gamma,u}$: Load sharing factor for unmodified profiles:

- for $\Gamma < \Gamma_B$:

$$X_{\Gamma,u} = \frac{A-3}{12} + \frac{1}{3}\frac{\Gamma - \Gamma_A}{\Gamma_B - \Gamma_A}$$

- for $\Gamma_B \leq \Gamma \leq \Gamma_D$:

  $X_{\Gamma,u} = 1$

- for $\Gamma_D < \Gamma$:

$$X_{\Gamma,u} = \frac{A-3}{12} + \frac{1}{3}\frac{\Gamma_E - \Gamma}{\Gamma_E - \Gamma_D}$$

Note 2: A is to be taken at least equal to 7.

$X_{\Gamma,m}$: Load sharing factor for profile modification:

- for $\Gamma < \Gamma_{AB}$, provided that $X_{\Gamma,m} \geq 0$:

$$X_{\Gamma,m} = \left(1 - \frac{C_{a2}}{C_{eff}}\right)\frac{1}{3} + \left(\frac{1}{3} + \frac{2}{3}\frac{C_{a2}}{C_{eff}}\right)\frac{\Gamma - \Gamma_A}{\Gamma_B - \Gamma_A}$$

- for $\Gamma_{AB} \le \Gamma < \Gamma_B$, provided that $X_{\Gamma,m} \le 1$:

$$X_{\Gamma,m} = \left(1 - \frac{C_{a1}}{C_{eff}}\right)\frac{1}{3} + \left(\frac{1}{3} + \frac{2}{3}\frac{C_{a1}}{C_{eff}}\right)\frac{\Gamma - \Gamma_A}{\Gamma_B - \Gamma_A}$$

- for $\Gamma_B \le \Gamma \le \Gamma_D$:
  $X_{\Gamma,m} = 1$
- for $\Gamma_D < \Gamma \le \Gamma_{DE}$, provided that $X_{\Gamma,m} \le 1$:

$$X_{\Gamma,m} = \left(1 - \frac{C_{a2}}{C_{eff}}\right)\frac{1}{3} + \left(\frac{1}{3} + \frac{2}{3}\frac{C_{a2}}{C_{eff}}\right)\frac{\Gamma_E - \Gamma}{\Gamma_E - \Gamma_D}$$

- for $\Gamma_{DE} < \Gamma$, provided that $X_{\Gamma,m} \ge 0$:

$$X_{\Gamma,m} = \left(1 - \frac{C_{a1}}{C_{eff}}\right)\frac{1}{3} + \left(\frac{1}{3} + \frac{2}{3}\frac{C_{a1}}{C_{eff}}\right)\frac{\Gamma_E - \Gamma}{\Gamma_E - \Gamma_D}$$

$X_{\Gamma,wm}$: Load sharing factor for profile modification:

- for $\Gamma < \Gamma_{AB}$, provided that $X_{\Gamma,wm} \ge 0$:

$$X_{\Gamma,wm} = \left(1 - \frac{C_{a2}}{C_{eff}}\right)\frac{1}{\varepsilon_\alpha} + \frac{(\varepsilon_\alpha - 1)C_{a1} + (3\varepsilon_\alpha + 1)C_{a2}}{2\varepsilon_\alpha(\varepsilon_\alpha + 1)C_{eff}}\frac{\Gamma - \Gamma_A}{\Gamma_B - \Gamma_A}$$

- for $\Gamma_{AB} \le \Gamma \le \Gamma_{DE}$, provided that $X_{\Gamma,wm} \le 1$:

$$X_{\Gamma,wm} = \frac{1}{\varepsilon_\alpha} + \frac{(\varepsilon_\alpha - 1)(C_{a1} + C_{a2})}{2\varepsilon_\alpha(\varepsilon_\alpha + 1)C_{eff}}$$

- for $\Gamma_{DE} < \Gamma$, provided that $X_{\Gamma,wm} \ge 0$:

$$X_{\Gamma,wm} = \left(1 - \frac{C_{a1}}{C_{eff}}\right)\frac{1}{\varepsilon_\alpha} + \frac{(\varepsilon_\alpha - 1)C_{a2} + (3\varepsilon_\alpha + 1)C_{a1}}{2\varepsilon_\alpha(\varepsilon_\alpha + 1)C_{eff}}\frac{\Gamma_E - \Gamma}{\Gamma_E - \Gamma_{DE}}$$

C_{eff} : Optimal tip relief, in µm (see [2.6.6])
C_{ai} : Tip relief of pinion or wheel, in µm
Γ_i : Parameter of any point on the line of action, given in Tab 26.

2.6.9 Transverse unit load w_{Bt}

The transverse unit load w_{Bt} is calculated according to the following formula:

$$w_{Bt} = K_A \cdot K_V \cdot K_{H\beta} \cdot K_{H\alpha} \cdot K_\gamma \cdot \frac{F_t}{b}$$

where:

K_A : Application factor (see [2.3.2])
K_V : Dynamic factor (see [2.3.4])
$K_{H\beta}$: Face load distribution factor (see [2.3.5])
$K_{H\alpha}$: Transverse load distribution factor (see [2.3.6])
K_γ : Load sharing factor (see [2.3.3]).

2.6.10 Interfacial bulk temperature Θ_{Mi}

The interfacial bulk temperature Θ_{Mi} may be suitably averaged from the two overall bulk temperatures of the teeth in contact, Θ_{M1} and Θ_{M2}. The following estimation could be used in general configurations:

$$\Theta_{Mi} = \Theta_{oil} + 0{,}47\, X_S\, X_{mp}\, \Theta_{fl,m}$$

where:

Θ_{oil} : Oil temperature, in °C
X_S : Lubrication system factor:
- for spray lubrication: $X_S = 1{,}2$
- for dip lubrication: $X_S = 1{,}0$
- for meshes with additional spray for cooling purpose: $X_S = 1{,}0$
- for gears submerged in oil, provided sufficient cooling: $X_S = 0{,}2$

X_{mp} : Multiple mating pinion factor:

$$X_{mp} = \frac{3 + n_p}{4}$$

n_p : Number of mesh in contact

$\Theta_{fl,m}$: Average flash temperature on the path of contact, in °C.
The average temperature should be calculated on at least ten equidistant points on the path line of contact between Γ_A and Γ_E.

2.6.11 Scuffing temperature Θ_S

The scuffing temperature Θ_S may be determined according to the following formula:

$\Theta_S = 80 + (0,85 + 1,4\ X_W)\ X_L\ (S_{FZG} - 1)^2$

where:

X_W : Structural factor given in Tab 27

X_L : Lubricant factor given in Tab 25

S_{FZG} : Load stage where scuffing occurs, according to gear tests, such as Ryder, FZG-Ryder, FZG L-42 or FZG A/8 3/90.

Table 27 : Structural factor X_W

Material	X_W
Through-hardened steel	1,00
Phosphated steel	1,25
Copper-plated steel	1,50
Bath or gas nitrided steel	1,50
Hardened carburized steel, with austenite content less than 10%	1,15
Hardened carburized steel, with austenite content between 10% and 20%	1,00
Hardened carburized steel, with austenite content above 20%	0,85
Austenite steel (stainless steel)	0,45

3 Design of gears - Determination of the load capacity of bevel gears

3.1 Symbols, units, definitions

3.1.1 Symbols and units

The meaning of the main symbols used in this Article is specified below.

Other symbols introduced in connection with the definition of influence factors are defined in the appropriate sub-articles.

A : Flank tolerance class according to ISO 1328-1:2013

a_v : Virtual operating centre distance, in mm

a_{vn} : Virtual operating centre distance, in mm

b : Effective face width, in mm

d_e : Outer pitch diameter, in mm

d_{ext} : External diameter of shaft, in mm

d_{int} : Internal diameter of shaft, in mm

d_m : Mean pitch diameter, in mm

d_s : Shrinkage diameter of the wheel, in mm

d_v : Virtual reference diameter, in mm

d_{va} : Virtual tip diameter, in mm

d_{van} : Virtual tip diameter, in mm

d_{vb} : Virtual base diameter, in mm

d_{vbn} : Virtual base diameter, in mm

d_{vf} : Virtual root diameter, in mm

d_{vn} : Virtual reference diameter, in mm

F_{mt} : Nominal tangential load, in N

F_β : Total helix deviation, in µm

$g_{v\alpha}$: Length of path of contact, in mm

$g_{v\alpha n}$: Length of path of contact, in mm

h_{aP} : Basic rack addendum, in mm

h_{fP} : Basic rack dedendum, in mm

h_v : Virtual tooth depth, in mm

HB : Brinell hardness, in N/mm²

HPX : Rockwell hardness

HV : Vickers hardness, in N/mm²
k : Gear axial position on shaft with respect to the bearings
ℓ : Bearing span, in mm
ℓ_{bm} : Length of the line of contact, in mm
ℓ'_{bm} : Length of the line of contact, in mm
m_{et} : Outer transverse module, in mm
m_{mn} : Mean normal module, in mm
m_{mt} : Mean transverse module, in mm
n : Rotational speed, in rpm
P : Transmitted power, in kW
p_{et} : Transverse base pitch, in mm
pr : Protuberance of the tool, in mm
q : Material allowance for finish machining, in mm
r_{c0} : Cutter radius, in mm
r_e : Outer cone distance, in mm
$R_{\varepsilon,\sigma}$: Minimum yield strength of the shaft material, in N/mm²
ρ_m : Mean cone distance, in mm
$R_{m,rim}$: Ultimate tensible strength of the rim material, in N/mm²
R_Z : Mean peak-to-valley roughness, in µm
R_{Zf} : Mean peak-to-valley flank roughness, in µm
s_R : Rim thickness, in mm
T : Transmitted torque, in kN·m
u : Reduction ratio
u_v : Virtual reduction ratio
v_{mt} : Linear speed at mean pitch diameter, in m/s
x_h : Addendum modification coefficient
x_S : Thickness modification coefficient
z : Number of teeth
z_v : Virtual number of teeth
z_{vn} : Virtual number of teeth
α_n : Normal pressure angle
α_{vt} : Virtual transverse pressure angle
β_m : Mean helix angle
β_{vb} : Virtual base helix angle
δ : Pitch angle
$\varepsilon_{v\alpha}$: Virtual transverse contact ratio
$\varepsilon_{v\alpha n}$: Virtual transverse contact ratio
$\varepsilon_{v\beta}$: Virtual overlap ratio
$\varepsilon_{v\gamma}$: Virtual total contact ratio
ν_{40} : Nominal kinematic viscosity of oil at 40°C, in mm²/s
ρ_{a0} : Tip radius of the tool, in mm
σ_F : Tooth root bending stress, in N/mm²
σ_{FE} : Endurance limit for tooth root bending stress, in N/mm²
σ_{FP} : Permissible tooth root bending stress, in N/mm²
σ_H : Contact stress, in N/mm²
$\sigma_{H,lim}$: Endurance limit for contact stress, in N/mm²
σ_{HP} : Permissible contact stress, in N/mm².

Subscripts:

- 1 for pinion, i.e. the gear having the smaller number of teeth
- 2 for wheel.

3.1.2 Geometrical definitions

In the calculation of surface durability, b is the minimum face width on the pitch diameter between pinion and wheel.

In tooth strength calculations, b_1 and b_2 are the face widths at the respective tooth roots. In any case, b_1 or b_2 are not to be taken greater than b by more than one module m_{mn} (in case of width of one gear much more important than the other).

a) General geometrical definitions

$$u = \frac{z_2}{z_1}$$

$$d_{ei} = \frac{z_i m_{mn}}{\cos\beta_m} + b_i \sin\delta_i$$

$$r_e = \frac{d_{e1}}{2\sin\delta_1} = \frac{d_{e2}}{2\sin\delta_2}$$

$$r_m = r_e - 0{,}5\ b$$

$$m_{et} = \frac{d_{e1}}{z_1} = \frac{d_{e2}}{z_2}$$

$$m_{mt} = \frac{r_m m_{et}}{r_e}$$

$$d_{mi} = \frac{z_i m_{mn}}{\cos\beta_m}$$

b) Geometrical definitions of virtual cylindrical gears in transverse section (suffix v)

$$z_{vi} = \frac{z_i}{\cos\delta_i}$$

$$u_v = \frac{z_{v2}}{z_{v1}}$$

$$\tan\alpha_{vt} = \frac{\tan\alpha_n}{\cos\beta_m}$$

$$\sin\beta_{vb} = \sin\beta_m \cdot \cos\alpha_n$$

$$d_{vi} = \frac{d_{mi}}{\cos\delta_i}$$

$$a_v = 0{,}5\ (d_{v1} + d_{v2})$$

$$d_{v\alpha t} = d_{vi} + 2\ h_{aPi}$$

$$d_{v\beta t} = d_{vi} \cos\alpha_{vt}$$

$$d_{v\phi t} = d_{vi} + 2\ m_{mn}\ x_{hi} - 2\ h_{fPi}$$

$$h_{vt} = 0{,}5\ (d_{vai} - d_{vfi})$$

$$p_{\varepsilon\tau} = m_{mt}\ \pi \cos\alpha_{vt}$$

$$\left(g_{v\alpha} = 0{,}5\ \left(\sqrt{d_{va1}^2 - d_{vb1}^2} + \sqrt{d_{va2}^2 - d_{vb2}^2}\right) - a_v \sin\alpha_{vt}\right)$$

$$\left(\varepsilon_{v\alpha} = \frac{g_{v\alpha}}{p_{et}}\right)$$

$$\left(\varepsilon_{v\beta} = \frac{b\sin\beta_m}{\pi m_{mn}}\right)$$

$$\left(\varepsilon_{v\gamma} = \sqrt{\varepsilon_{v\alpha}^2 + \varepsilon_{v\beta}^2}\right)$$

- if $\varepsilon_{v\beta} < 1$:

$$\ell_{bm} = \frac{b\varepsilon_{v\alpha}}{\cos\beta_{vb} \cdot \varepsilon_{v\gamma}^2} \cdot \sqrt{\varepsilon_{v\gamma}^2 - (2 - \varepsilon_{v\alpha})^2 \cdot (1 - \varepsilon_{v\beta})^2}$$

- if $\varepsilon_{v\beta} \geq 1$:

$$\ell_{bm} = \frac{b\varepsilon_{v\alpha}}{\cos\beta_{vb} \cdot \varepsilon_{v\gamma}}$$

$$\ell'_{bm} = \ell_{\beta\mu} \cos\beta_{vb}$$

c) Geometrical definitions of virtual cylindrical gears in normal section (suffix vn)

$$z_{vni} = \frac{z_{vi}}{\cos\beta_m \cdot (\cos\beta_{vb})^2}$$

$$d_{vvt} = m_{mn}\ \zeta_{vvt}$$

$a_{vn} = 0,5\ (d_{vn1} + d_{vn2})$

$d_{v\alpha vt} = d_{vni} + 2\ h_{aPi}$

$d_{v\beta vt} = d_{vni} \cos \alpha_v$

$$g_{v\alpha n} = 0,5\ (\sqrt{d_{van1}^2 - d_{vbn1}^2} + \sqrt{d_{van2}^2 - d_{vbn2}^2}) - a_{vn} \sin \alpha_n$$

$$\varepsilon_{v\alpha n} = \frac{\varepsilon_{v\alpha}}{(\cos \beta_{vb})^2}$$

d) Definitions of transmissions characteristics

$$T_i = \frac{60}{2\pi} \cdot \frac{P}{n_i}$$

$$F_{mt} = \frac{P}{n_1} \cdot \frac{60}{\pi d_{m1}} \cdot 10^6$$

$$v_{mt} = \frac{\pi n_1}{60} \cdot \frac{d_{m1}}{10^3} = \frac{\pi n_2}{60} \cdot \frac{d_{m2}}{10^3}$$

$$F_{\beta i} = 2^{0,5 \cdot (Q_i - 5)} \cdot (0,1\ \cdot d_{vi}^{0,5} + 0,63\ \sqrt{b} + 4,2)$$

3.2 Principle

3.2.1

a) The following requirements apply to bevel spur or helical gears with external teeth, and provide a method for the calculation of the load capacity with regard to:
- the surface durability (contact stress)
- the tooth root bending stress.

The bevel gears for marine application are to comply with the following restrictions:
- $1,2 < \varepsilon_{v\alpha} < 2,5$
- $\beta_m < 30°$
- $s_R > 3,5\ m_{mn}$

The relevant formulae are provided in [3.4] and [3.5].

The influence factors common to the formulae are given in [3.3].

b) Gears, for which the conditions of validity of some factors or formulae are not satisfied, will be given special consideration by the Society.

c) Other methods of determination of load capacity will be given special consideration by the Society. Any alternative calculations are to comply with ISO 6336 series standards.

3.3 General influence factors

3.3.1 General

General influence factors are defined in [3.3.2], [3.3.3], [3.3.4], [3.3.5] and [3.3.6]. Alternative values may be used provided they are derived from appropriate measurements.

3.3.2 Application factor K_A

The application factor K_A accounts for dynamic overloads from sources external to the gearing (driven and driving machines).

The values of K_A to be used are given in Tab 5.

3.3.3 Load sharing factor $K\gamma$

The load sharing factor K_γ accounts for the uneven sharing of load on multiple path transmissions, such as epicyclic gears or tandem gears.

The values of K_γ to be used are given in Tab 6.

3.3.4 Dynamic factor K_v

The dynamic factor K_V accounts for the additional internal dynamic loads acting on the tooth flanks and due to the vibrations of the pinion and wheel.

The calculation of the dynamic factor K_V is defined in Tab 28, where:

N : Resonance ratio, i.e. ratio of the pinion speed to the resonance speed:

$N = n_1 / n_{E1}$, with:

n_{E1} : Resonance speed, in rpm, defined by the following formula:

$$n_{E1} = \frac{30000}{\pi \cdot z_1} \cdot \sqrt{\frac{c_\gamma}{m_{red}}}$$

where:

m_{red} : Reduced mass of gear pair, in kg/mm. Estimated calculation of m_{red} is given by the following formula:

$$m_{red} = \frac{\rho \cdot 10^{-6} \cdot \pi}{8} \cdot \frac{d_{m1}^2}{(\cos\alpha_n)^2} \cdot \frac{u^2}{1+u^2}$$

ρ : Density of gearing material, equal to:

ρ = 7,83 for steel

c_γ : Mesh stiffness, in N/(mm.µm):

$c_\gamma = 20\ C_F\ C_b$

C_F and C_b being the correction factors for non average conditions defined in Tab 29.

The value of N determines the range of vibrations:

- subcritical range, when $N \le 0,75$
- main resonance range, when $0,75 < N < 1,25$

  This field is not permitted
- intermediate range, when $1,25 \le N \le 1,50$

  This field is normally to be avoided. Some alternative and more precise calculation could be accepted and special consideration will be given by the Society
- supercritical range, when $1,50 < N$.

3.3.5 Face load distribution factors $K_{H\beta}$ and $K_{F\beta}$

The face load distribution factors, $K_{H\beta}$ for contact stress and $K_{F\beta}$ for tooth root ending stress, account for the effects of non-uniform distribution of load across the face width.

a) The calculation of $K_{H\beta}$ is to be defined according to the mounting conditions of pinion and wheel:

- neither member cantilever mounted:

  $K_{H\beta} = 1,575 / C_b$
- one member cantilever mounted:

  $K_{H\beta} = 1,650 / C_b$
- both members cantilever mounted:

  $K_{H\beta} = 1,875 / C_b$

where C_b is the correction factor defined in Tab 29

b) $K_{F\beta}$ is to be determined using the following formula:

$K_{F\beta} = K_{H\beta} / K_{F0}$, with:

K_{F0} : Lengthwise curvature factor. It is to be taken above 1,0 and below 1,15 considering the following formula:

$$K_{F0} = 0,211 \cdot \left(\frac{r_{c0}}{r_m}\right)^{\frac{0,279}{\log(\sin\beta_m)}} + 0,789$$

3.3.6 Transverse load distribution factors $K_{H\alpha}$ and $K_{F\alpha}$

The transverse load distribution factors, $K_{H\alpha}$ for contact stress and $K_{F\alpha}$ for tooth root bending stress, account for the effects of pitch and profile errors on the transversal load distribution between two or more pairs of teeth in mesh.

The values of $K_{H\alpha}$ and $K_{F\alpha}$ are given in Tab 30.

3.4 Calculation of surface durability

3.4.1 General

The criterion for surface durability is based on the contact stress (hertzian pressure) σ_H on the pitch point or at the inner point of single pair contact.

The contact stress σ_H, defined in [3.4.2], is not to exceed the permissible contact stress σ_{HP} defined in [3.4.9].

Table 28 : Dynamic factor K_V

Resonance domain	Factor K_V
$N \le 0,75$	$K_V = N\,(C_{V1}\,B_p + C_{V2}\,B_f + C_{V3}) + 1$
$N > 1,50$	$K_V = C_{V5}\,B_p + C_{V6}\,B_f + C_{V7}$

Note 1:

B_p : Non-dimensional parameter taking into account the effect of tooth deviations and profile modifications:

$$B_p = \frac{c' f_{p,\,eff}}{K_A (F_{mt}/b)}$$

with:

c' : Single stiffness, in N/(mm·µm):
$c' = 14\,C_F\,C_b$, with C_F and C_b defined in Tab 29

$f_{\pi,\varepsilon\phi\phi}$: Effective base pitch deviation, in µm:
$f_{\pi,\varepsilon\phi\phi} = f_{\pi\tau} - y_\alpha$
with f_{pt} defined in Tab 30 and y_α defined in Tab 31

B_f : Non-dimensional parameter taking into account the effect of tooth deviations and profile modifications:
$B_f = B_p$

C_{V1} : Factor for pitch deviation effects:
$C_{v1} = 0,32$

C_{V2} : Factor for tooth profile deviation effects:
- if $1 < \varepsilon_{v\gamma} \le 2$:
  $C_{V2} = 0,34$
- if $2 < \varepsilon_{v\gamma}$:
  $$C_{V2} = \frac{0,57}{\varepsilon_{v\gamma} - 0,3}$$

C_{V3} : Factor for cyclic variation effect in mesh stiffness:
- if $1 < \varepsilon_{v\gamma} \le 2$:
  $C_{V3} = 0,23$
- if $2 < \varepsilon_{v\gamma}$:
  $$C_{V3} = \frac{0,096}{\varepsilon_{v\gamma} - 1,56}$$

C_{V5} : Factor equal to: $C_{V5} = 0,47$

C_{V6} : Factor:
- if $1 < \varepsilon_{v\gamma} \le 2$:
  $C_{V6} = 0,47$
- if $2 < \varepsilon v_\gamma$:
  $$C_{V6} = \frac{0,12}{\varepsilon_{v\gamma} - 1,74}$$

C_{V7} : Factor:
- if $1 < \varepsilon_{v\gamma} \le 1,5$:
  $C_{V7} = 0,75$
- if $1,5 < \varepsilon v_\gamma \le 2,5$:
  $C_{V7} = 0,125 \sin[\pi\,(\varepsilon_{v\gamma} - 2)] + 0,875$
- if $2,5 < \varepsilon v_\gamma$:
  $C_{V7} = 1$

Table 29 : Correction factors C_F and C_b

Conditions	Factors C_F and C_b
if $F_{mt}\,K_A / b_e \ge 100$ N/mm	$C_F = 1$
if $F_{mt}\,K_A / b_e < 100$ N/mm	$C_F = (F_{mt}\,K_A / b_e) / 100$
if $b_e / b \ge 0,85$	$C_b = 1$
if $b_e / b < 0,85$	$C_b = (b_e / b) / 0,85$
b_e : Effective face width, the real length of contact pattern. When b_e is not supplied, $b_e = 0,85\,b$ could be used.	

Table 30 : Transverse load factors $K_{H\alpha}$ and $K_{F\alpha}$

	Factors $K_{H\alpha}$ and $K_{F\alpha}$	Limitations
$\varepsilon_{v\gamma} \le 2$	$K_{H\alpha} = K_{F\alpha} = \frac{\varepsilon_{v\gamma}}{2} \cdot \left(0,9 + 0,4 \cdot \frac{c_\gamma \cdot (f_{pt} - y_\alpha)}{F_{mtH}/b}\right)$	$\frac{\varepsilon_{v\gamma}}{\varepsilon_{v\alpha} \cdot Z_{LS}^2} \ge K_{H\alpha} \ge 1$
$\varepsilon_{v\gamma} > 2$	$K_{H\alpha} = K_{F\alpha} = 0,9 + 0,4 \cdot \sqrt{\frac{2 \cdot (\varepsilon_{v\gamma} - 1)}{\varepsilon_{v\gamma}}} \frac{c_\gamma \cdot (f_{pt} - y_\alpha)}{F_{mtH}/b}$	$\frac{\varepsilon_{v\gamma}}{\varepsilon_{v\alpha} \cdot Y_\varepsilon} \ge K_{F\alpha} \ge 1$

Note 1:

c_γ : Mesh stiffness, in N/mm.µm, defined in [3.3.4]

f_{pt} : Larger value of the single pitch deviation of pinion or wheel, in µm.

Default value: $f_{pt} = 0,3\ (m_{mn} + 0,4\ |d_{vbi}|^{0,5} + 4) \cdot 2^{0,5\ (Q_i - 5)}$

In case of optimum profile correction, f_{pt} is to be replaced by f_{pt} / 2

y_α : Running-in allowance, in µm, defined in Tab 31

F_{mtH} : Determinant tangential load at mid-face width on the reference cone, in N:
$F_{mtH} = F_{mt} \cdot K_A \cdot K_V \cdot K_{H\beta}$

Table 31 : Running-in allowance y_α

Material	y_α, in µm	Limitations
St, St (cast), GTS (perl.), GGG (perl.), GGG (bai.), V, V (cast)	$\frac{160}{\sigma_{H,lim}} f_{pt}$	• if 5 m/s < v_{mt} ≤ 10 m/s: $y_\alpha \le 12800 / \sigma_{H,lim}$ • if 10 m/s < v_{mt}: $y_\alpha \le 6400 / \sigma_{H,lim}$
GGG (ferr.), GG	0,275 f_{pt}	• if 5 m/s < v_{mt} ≤ 10 m/s: $y_\alpha \le 22$ • if 10 m/s < v_{mt}: $y_\alpha \le 11$
Eh, IF, NT (nitr.), NV (nitr.), NV (nitrocar.)	0,075 f_{pt}	$y_\alpha \le 3$

Note 1: f_{pt} is defined in Tab 30 and $\sigma_{H,lim}$ is defined in [3.4.10].
Note 2: When material of the pinion differs from that of the wheel: $y_\alpha = 0,5\ (y_{\alpha 1} + y_{\alpha 2})$

3.4.2 Contact stress σ_H

The contact stress σ_H is to be determined as follows:

$$\sigma_H = \sigma_{H0} \cdot \sqrt{K_A \cdot K_\gamma \cdot K_V \cdot K_{H\beta} \cdot K_{H\alpha}}$$

where:

K_A : Application factor (see [3.3.2])

K_γ : Load sharing factor (see [3.3.3])

K_ς : Dynamic factor (see [3.3.4])

$K_{H\beta}$: Face load distribution factor (see [3.3.5])

$K_{H\alpha}$: Transverse load distribution factor (see [3.3.6])

$$\sigma_{H0} = Z_{M-B} \cdot Z_H \cdot Z_E \cdot Z_{LS} \cdot Z_\beta \cdot Z_K \cdot \sqrt{\frac{F_{mt}}{d_{v1} \cdot \ell_{bm}} \cdot \frac{u_v + 1}{u_v}}$$

with:

Z_{M-B} : Mid-zone factor, defined in [3.4.3]

Z_H : Zone factor, defined in [3.4.4]

ZE : Elasticity factor, defined in [3.4.5]

$Z_{\Lambda\Sigma}$: Load-sharing factor, defined in [3.4.6]

Z_β : Helix angle factor, defined in [3.4.7]

Z_K : Bevel gear ratio factor, defined in [3.4.8].

3.4.3 Mid-zone factor Z_{M-B}

The mid-zone factor Z_{M-B} accounts for the difference of contact pressure between the pitch point and the determinant point of load application.

Z_{M-B} is to be determined as follows:

$$Z_{M-B} = \frac{\tan\alpha_{vt}}{\sqrt{\left[\sqrt{\frac{d_{va1}^2}{d_{vb1}^2}-1}-\left(F_1\cdot\frac{\pi}{z_{v1}}\right)\right]\cdot\left[\sqrt{\frac{d_{va2}^2}{d_{vb2}^2}-1}-\left(F_2\cdot\frac{\pi}{z_{v2}}\right)\right]}}$$

where F_1 and F_2 are defined according to the following conditions:

- if $0 \le \varepsilon_{v\beta} < 1$:
  $F_1 = 2 + (\varepsilon_{v\alpha} - 2)\cdot\varepsilon_{v\beta}$
  $F_2 = 2\,\varepsilon_{v\alpha} - 2 + (2 - \varepsilon_{v\alpha})\cdot\varepsilon_{v\beta}$
- if $\varepsilon_{v\beta} \ge 1$:
  $F_1 = \varepsilon_{v\alpha}$
  $F_2 = \varepsilon_{v\alpha}$

3.4.4 Zone factor Z_H

The zone factor Z_H accounts for the influence on the hertzian pressure of tooth flank curvature at the pitch point.

Z_H is to be determined as follows:

$$Z_H = 2\cdot\sqrt{\frac{\cos\beta_{vb}}{\sin(2\cdot\alpha_{vt})}}$$

3.4.5 Elasticity factor Z_E

The elasticity factor Z_E accounts for the influence of the metal properties (module of elasticity E and Poisson's ratio ν) on the hertzian pressure.

The values of Z_E to be used are given in [2.4.5].

3.4.6 Load-sharing factor Z_{LS}

The load-sharing factor Z_{LS} accounts for load sharing between two or more pairs of teeth.

Z_{LS} is to be determined as follows:

- if $\varepsilon_{v\gamma} > 2$ and $\varepsilon_{v\beta} > 1$:

$$Z_{LS} = \left\{1 + 2\left[1-\left(\frac{2}{\varepsilon_{v\gamma}}\right)^{1,5}\right]\cdot\sqrt{1-\frac{4}{\varepsilon_{v\gamma}^2}}\right\}^{-0,5}$$

- if $\varepsilon_{v\gamma} \le 2$:
  $Z_{LS} = 1$
- otherwise, an alternative calculation should be supplied and will be given special consideration by the Society.

3.4.7 Helix angle factor Z_β

The helix angle factor Z_β accounts for the influence of helix angle on the surface durability, allowing for such variables as the distribution of the load along the lines of contact.

Z_β is to be determined as follows:

$$Z_\beta = \frac{1}{\sqrt{\cos\beta_m}}$$

3.4.8 Bevel gear factor Z_K

The bevel gear factor Z_K is an empirical factor which accounts for the difference between bevel and cylindrical gears loading.

Z_K is to be determined as follows:

$Z_K = 0,8$

3.4.9 Permissible contact stress σ_{HP}

The permissible contact stress σ_{HP}, in N/mm², is to be determined separately for pinion and wheel, using the following formula:

$$\sigma_{HP} = \frac{\sigma_{H,lim}}{S_H}\cdot Z_{NT}\cdot Z_L\cdot Z_V\cdot Z_R\cdot Z_W\cdot Z_X$$

where:

$\sigma_{H,lim}$: Endurance limit for contact stress, defined in [3.4.10]
Z_{NT} : Life factor for contact stress, defined in [3.4.11]
Z_L, Z_V, Z_R: Lubrication, speed and roughness factors, respectively, defined in [3.4.12]
Z_Ω : Hardness ratio factor, defined in [3.4.13]
Z_Ξ : Size factor for contact stress, defined in [3.4.14]
Σ_H : Safety factor for contact stress, defined in [3.4.15].

3.4.10 Endurance limit for contact stress $\sigma_{H,lim}$

The endurance limit for contact stress $\sigma_{H,lim}$, in N/mm², is the limit of repeated contact stress which can be permanently endured.

The values to be adopted for $\sigma_{H,lim}$ are given in [2.4.9] in relation to the type of steel employed and the heat treatment performed.

3.4.11 Life factor for contact stress Z_{NT}

The life factor Z_{NT} accounts for the influence of limited service life on the permissible contact stress.

Some values of Z_{NT} are given in Tab 17 for information.

The value of Z_{NT} to be used will be given special consideration by the Society depending on the equipment's arrangement and use.

3.4.12 Lubrication factor Z_L, speed factor Z_V and roughness factor Z_R

The lubricant factor Z_L accounts for the influence of the type of the lubricant and the influence of its viscosity, the speed factor Z_V accounts for the influence of the pitch line velocity, and the roughness factor Z_R accounts for the influence of the surface roughness on the surface endurance capacity.

These factors are to be determined according to the formulae of [2.4.11], using the following parameters:

ϖ_{mt} : Linear speed at mean pitch diameter, in m/s. It is to replace ϖ in the calculation of Z_V

ρ_{red} : Relative radius of curvature, in mm:

$$\rho_{red} = \frac{a_v \cdot \sin\alpha_{vt}}{\cos\beta_{vb}} \cdot \frac{u_v}{(1+u_v)^2}$$

3.4.13 Hardness ratio factor Z_W

The hardness ratio factor Z_W accounts for the increase of the surface durability. This factor is to be determined according to the formulae of [2.4.12], using the following parameters:

ϖ_{mt} : Linear speed at mean pitch diameter, in m/s. It is to replace ϖ in the calculations

ρ_{red} : Relative radius of curvature, in mm, as defined in [3.4.12]

υ_{ϖ} : Virtual reduction ratio. It is to replace u in the calculations.

3.4.14 Size factor Z_X

The size factor Z_X accounts for the influence of tooth dimensions on permissible contact stress and reflects the non-uniformity of material properties.

Z_X is in general equal to 1.

The value Z_X to be used will be given special consideration by the Society depending on the material.

3.4.15 Safety factor for contact stress S_H

The values to be adopted for the safety factor for contact stress S_H are given in Tab 18.

3.5 Calculation of tooth bending strength

3.5.1 General

The criterion for tooth root bending stress is based on the local tensile stress at the tooth root in the direction of the tooth height.

The tooth root bending stress σ_F, defined in [3.5.2], is not to exceed the permissible tooth root bending stress σ_{FP} defined in [3.5.8].

3.5.2 Tooth root bending stress σ_F

The tooth root bending stress σ_F is to be determined as follows:

$$\sigma_F = \frac{F_{mt}}{b \cdot m_{mn}} \cdot Y_{Fa} \cdot Y_{Sa} \cdot Y_{\varepsilon} \cdot Y_{LS} \cdot Y_K \cdot K_A \cdot K_{\gamma} \cdot K_V \cdot K_{F\beta} \cdot K_{F\alpha}$$

where:

Y_{Fa} : Tooth form factor, defined in [3.5.3]

Y_{Sa} : Stress correction factor, defined in [3.5.4]

Y_{ε} : Contact ratio factor, defined in [3.5.5]

Y_{LS} : Load sharing factor, defined in [3.5.6]

Y_K : Bevel gear factor, defined in [3.5.7]

K_A : Application factor (see [3.3.2])

K_{γ} : Load sharing factor (see [3.3.3])

K_V : Dynamic factor (see [3.3.4])

$K_{F\beta}$: Face load distribution factor (see [3.3.5])

$K_{F\alpha}$: Transverse load distribution factor (see [3.3.6]).

When a shot-peening treatment of the tooth root is applied according to a process agreed by the Society, a reduction of the bending stress σ_F (depending on the material category, but without being over 10%) could be taken in consideration only for carburized case-hardened steel gears.

3.5.3 Tooth form factor Y_{Fa}

The tooth form factor Y_{Fa} takes into account the effect of the tooth form on the nominal bending stress, assuming the load applied at the outer point of a single pair tooth contact of the virtual cylindrical gears in normal section.

Y_{Fa} is to be determined separately for the pinion and for the wheel, using the following formula:

$$Y_{Fa} = \frac{6 \cdot \frac{h_{Fa}}{m_{mn}} \cdot \cos\alpha_{Fan}}{\left(\frac{S_{Fn}}{m_{mn}}\right)^2 \cdot \cos\alpha_n}$$

where:

h_{Fa} : Bending moment arm, in mm:

$$\frac{h_{Fa}}{m_{mn}} = \frac{1}{2}\left[(\cos\gamma_a - \sin\gamma_a \cdot \tan\alpha_{Fan}) \cdot \frac{d_{van}}{m_{mn}} - z_{vn} \cdot \cos\left(\frac{\pi}{3} - \theta\right) - \left(\frac{G}{\cos\theta} - \frac{\rho_{a0}}{m_{mn}}\right)\right]$$

s_{Fn} : Tooth root chord at the critical section, in mm:

$$\frac{s_{Fn}}{m_{mn}} = z_{vn} \cdot \sin\left(\frac{\pi}{3} - \theta\right) + \sqrt{3} \cdot \left(\frac{G}{\cos\theta} - \frac{\rho_{a0}}{m_{mn}}\right)$$

G : Parameter defined by:

$$G = \frac{\rho_{a0}}{m_{mn}} - \frac{h_{fP}}{m_{mn}} + x_h$$

θ : Parameter defined by:

$$\theta = \frac{2 \cdot G}{z_{vn}} \cdot \tan\theta - H$$

This transcendental equation is to be calculated by iteration

H : Parameter defined by:

$$H = \frac{2}{z_{vn}} \cdot \left(\frac{\pi}{2} - \frac{E}{m_{mn}}\right) - \frac{\pi}{3}$$

E : Parameter defined by:

$$E = \left(\frac{\pi}{4} - x_s\right) m_{mn} - h_{fP} \tan\alpha_n + \frac{s_{pr}}{\cos\alpha_n} - (1 - \sin\alpha_n)\frac{\rho_{a0}}{\cos\alpha_n}$$

s_{pr} : Residual fillet undercut, in mm:

$s_{pr} = pr - q$

The parameters of the virtual gears are defined as follows:

α_{Fan} : Load direction angle:

$\alpha_{Fan} = \alpha_{an} - \gamma_a$

γ_a : Parameter defined by:

$$\gamma_a = \frac{o,5 \cdot \pi + 2(\tan\alpha_n \cdot x_h + x_s)}{z_{vn}} + \mathrm{inv}\alpha_n - \mathrm{inv}\alpha_{an}$$

with inv, involute function, equal to:

inv $\alpha = \tau\alpha v\ \alpha - \alpha$

α_{an} : Form factor pressure angle:

$$\cos\alpha_{an} = \frac{d_{vbn}}{d_{van}}$$

3.5.4 Stress correction factor Y_{Sa}

The stress correction factor Y_{Sa} is used to convert the nominal bending stress to local tooth root stress.

Y_{Sa} is to be determined as follows:

$$Y_{Sa} = (1,2 + 0,13L_a) \cdot q_s^{\frac{1}{1,21 + (2,3)/L_a}}$$

where:

$L_a = \frac{s_{Fn}}{h_{Fa}}$

with s_{Fn} and h_{Fa} defined in [3.5.3]

q_s : Notch parameter:

$$q_s = \frac{s_{Fn}}{2\rho_F}$$

with s_{Fn} defined in [3.5.3]

Note 1: The notch parameter should be within the range:

$1 \le q_s < 8$

ρ_F : Fillet radius at contact point of 30° tangent, in mm:

$$\frac{\rho_F}{m_{mn}} = \frac{\rho_{a0}}{m_{mn}} + \frac{2G^2}{\cos\theta \cdot (z_{vn} \cdot \cos^2\theta - 2G)}$$

3.5.5 Contact ratio factor Y_ε

The contact ratio factor Y_ε converts the load application at the tooth tip to the decisive point of load application.

Y_ε is to be determined as follows:

- if $\varepsilon_{v\beta} \le 1$:

$$Y_\varepsilon = 0,25 + \frac{0,75}{\varepsilon_{v\alpha}} - \varepsilon_{v\beta} \cdot \left(\frac{0,75}{\varepsilon_{v\alpha}} - 0,375\right)$$

- if $\varepsilon_{v\beta} > 1$:

$Y_\varepsilon = 0,625$

Note 1: A minimum of 0,625 should always be taken for Y_ε.

3.5.6 Load sharing factor Y_{LS}

The load sharing factor Y_{LS} accounts for load sharing between two or more pairs of teeth.

Y_{LS} is to be determined as follows:

$$Y_{LS} = Z_{LS}^2$$

3.5.7 Bevel gear factor Y_K

The bevel gear factor Y_K accounts for the difference between bevel and cylindrical gears loading.

Y_K is to be determined as follows:

$$Y_K = \left(\frac{1}{2} + \frac{\ell'_{bm}}{2b}\right)^2 \cdot \frac{b}{\ell'_{bm}}$$

3.5.8 Permissible tooth root bending stress σ_{FP}

The permissible tooth root bending stress σ_{FP} is to be determined separately for pinion and for wheel, using the following formula:

$$\sigma_{FP} = \frac{\sigma_{FE}}{S_F} \cdot Y_d \cdot Y_{NT} \cdot Y_{\delta relT} \cdot Y_{RrelT} \cdot Y_X$$

where:

σ_{FE} : Endurance limit for tooth root bending stress, defined in [3.5.9]

Ψ_δ : Design factor, defined in [3.5.10]

Ψ_{NT} : Life factor for tooth root bending stress, defined in [3.5.11]

$\Psi_{\delta relT}$: Relative notch sensitivity factor, defined in [3.5.12]

$\Psi_{P\rho\varepsilon IT}$: Relative surface factor, defined in [3.5.13]

Ψ_Ξ : Size factor for tooth root bending stress, defined in [3.5.14]

Σ_Φ : Safety factor for tooth root bending stress, defined in [3.5.15].

3.5.9 Endurance limit for tooth root bending stress σ_{FE}

The endurance limit for tooth root bending stress σ_{FE} is the local tooth root stress which can be permanently endured.

The values to be adopted for σ_{FE} are given in [2.5.9]] in relation to the type of steel employed and the heat treatment performed.

3.5.10 Design factor Y_d

The design factor Y_d takes into account the influence of load reversing and shrink fit pre-stressing on the tooth root strength.

Y_d is defined in [2.5.10].

3.5.11 Life factor Y_{NT}

The life factor Y_{NT} accounts for the influence of limited service life on the permissible tooth root bending stress.

Some values of Y_{NT} are given in Tab 20 for information.

The value Y_{NT} to be used will be given special consideration by the Society depending on the equipment's arrangement and use.

3.5.12 Relative notch sensitivity factor $\Psi_{\delta relT}$

The relative notch sensitivity factor $\Psi_{\delta relT}$ indicates the extent to which the theoretically concentrated stress lies above the fatigue endurance limit.

$\Psi_{\delta relT}$ is to be determined according to [2.5.12].

3.5.13 Relative surface factor $\Psi_{P\rho\varepsilon IT}$

The relative surface factor $\Psi_{P\rho\varepsilon IT}$ takes into account the dependence of the root strength on the surface condition on the tooth root fillet (roughness).

The values to be adopted for $\Psi_{P\rho\varepsilon IT}$ are given in Tab 22 in relation to the type of steel employed.

They are valid only when scratches or similar defects deeper than 12 R_a are not present.

3.5.14 Size factor Y_X

The size factor Y_X takes into account the decrease of the strength with increasing size.

The values to be adopted for Y_X are given in Tab 23 in relation to the type of steel employed and the value of normal module m_{mn}.

3.5.15 Safety factor for tooth root bending stress S_F

The values to be adopted for the safety factor for tooth root bending stress S_F are given in Tab 24.

3.6 Calculation of scuffing resistance

3.6.1 General

The following calculations are requested for equipment running in supercritical domain i.e. when N > 1,5 (see [3.3.4]).

The criterion for scuffing resistance is based on the calculation of the flash temperature method. According to this method, the risk of scuffing is assessed as a function of the properties of gear material, the lubricant characteristics, the surface roughness of tooth flanks, the sliding velocities and the load.

The interfacial contact temperatures are calculated as the sum of the interfacial bulk temperature of the moving interface and the fluctuating flash temperature of the moving faces in contact.

The maximum value of the interfacial contact temperature reduced by oil temperature is not to exceed 0,8 times the scuffing temperature reduced by oil temperature:

$(\Theta_{B,Max} - \Theta_{o\iota\lambda}) \leq 0,8\ (\Theta_{\sigma} - \Theta_{o\iota\lambda})$

where:

$\Theta_{B,Max}$: Maximum contact temperature along the path of contact, in °C, defined in [3.6.2]

$\Theta_{o\iota\lambda}$: Oil temperature, in °C

Θ_{Σ} : Scuffing temperature, in °C, defined in [3.6.11].

Additionally, the difference between the scuffing temperature and the contact temperature along the path is not to be below 30°C:

$(\Theta_{\sigma} - \Theta_{B,Max}) \geq 30°C$

Other methods of determination of the scuffing resistance could be accepted by the Society.

3.6.2 Contact temperature Θ_B

The maximum contact temperature $\Theta_{B,Max}$ along the path of contact, in °C, is calculated as follows:

$\Theta_{B,Max} = \Theta_{Mi} + \Theta_{fl,Max}$

where:

$\Theta_{M\iota}$: Interfacial bulk temperature, in °C, defined in [3.6.10]

$\Theta_{fl,Max}$: Maximum flash temperature along the path of contact, in °C, defined in [3.6.3].

The flash temperature is to be calculated on at least ten points along the path of contact and the maximum of these values has to be used for the calculation of maximum contact temperature.

3.6.3 Flash temperature Θ_{fl}

The flash temperature Θ_{fl} at any point along the path of contact, in °C, is calculated with the following formula:

$$\Theta_{fl} = \mu_m \cdot X_M \cdot X_J \cdot X_G (X_\Gamma \cdot w_{Bt})^{0,75} \cdot \frac{v_{mt}^{0,5}}{r_m^{0,25}}$$

where:

μ_m : Mean coefficient of friction, defined in [3.6.4]

Ξ_M : Thermo-elastic factor, in $K \cdot N^{-3/4} \cdot s^{-1/2} \cdot m^{-1/2} \cdot mm$, defined in [3.6.5]

Ξ_J : Approach factor, defined in [3.6.6]

Ξ_G : Geometry factor, defined in [3.6.7]

Ξ_Γ : Load sharing factor, defined in [3.6.8]]

ω_{Bt} : Transverse unit load, in N/mm, defined in [3.6.9].

3.6.4 Mean coefficient of friction μ_m

An estimation of the mean coefficient of friction μ_m of common working conditions could be used with the following formula:

$$\mu_m = 0,06 \cdot \left(\frac{w_{Bt}}{v_{g\Sigma C} \cdot \rho_{relC}}\right)^{0,2} \cdot X_L \cdot X_R$$

where:

w_{Bt} : Transverse unit load, in N/mm (see [3.6.9])

$v_{g\Sigma C}$: Sum of tangential velocities in pitch point, in m/s:

$v_{g\Sigma C} = 2\, v_{mt} \sin \alpha_{vt}$

with the maximum value of v_{mt} equal to 50 m/s

ρ_{relC} : Transverse relative radius of curvature, in mm:

$$\rho_{relC} = \frac{u \cdot \tan\delta_1 \cdot \tan\delta_2}{\tan\delta_1 + u \cdot \tan\delta_2} \cdot r_m \cdot \sin\alpha_{vt}$$

X_L : Lubricant factor, given in Tab 25

X_R : Roughness factor:

$$X_R = \left(\frac{R_{zf1} + R_{zf2}}{2}\right)^{0,25}$$

3.6.5 Thermo-elastic factor X_M

The thermo-elastic factor X_M accounts for the influence of the material properties of pinion and wheel.

The values to be adopted for X_M are given in [2.6.5] in relation to the gear material characteristics.

3.6.6 Approach factor X_J

The approach factor X_J takes empirically into account an increased scuffing risk in the beginning of the approach path, due to mesh starting without any previously built up oil film.

The values to be adopted for X_J are given in [2.6.6] in relation to the gear material characteristics.

3.6.7 Geometry factor X_G

The geometry factor X_G is calculated according to the following formula:

$$X_G = 0,51 X_{\alpha\beta}\left(\frac{1}{\tan\delta_1} + \frac{1}{\tan\delta_2}\right)^{0,25} \frac{\left|(1+\Gamma)^{0,5} - \left(1 + \Gamma\frac{\tan\delta_1}{\tan\delta_2}\right)^{0,5}\right|}{(1+\Gamma)^{0,25} \cdot \left(1 - \Gamma\frac{\tan\delta_1}{\tan\delta_2}\right)^{0,25}}$$

where:

$X_{\alpha\beta}$: Angle factor, equal to:

$X_{\alpha\beta} = 1,22\, (\sin\alpha_{vt})^{0,25} \cdot (\cos\alpha_{vt})^{-0,5} \cdot (\cos\beta_{vb})^{0,25}$

Γ : Parameter of the point on the line of action, defined in Tab 32.

3.6.8 Load sharing factor X_Γ

The load sharing factor X_Γ accounts for the load sharing of succeeding pairs of meshing teeth. It is defined as a function of the value of the parameter in the line of action, increasing at the approach path of transverse double contact.

The values to be adopted for X_Γ are given in [2.6.8].

The parameter of the line of action Γ to be used is given in Tab 32.

Table 32 : Parameter Γ on the line of action

Point			Γ
A	:	Lower end point of the path of contact	$\Gamma_A = -\frac{\tan\delta_2}{\tan\delta_1}\left(\frac{\tan\alpha_{a2}}{\tan\alpha_{vt}} - 1\right)$
AU	:	Lower end point of buttressing effect	$\Gamma_{AU} = \Gamma_A + 0{,}2 \sin\beta_{vb}$
AB	:	Intermediate point between A and B	$\Gamma_{AB} = 0{,}5\ (\Gamma_A + \Gamma_B)$
B	:	Lower point of single pair tooth contact	$\Gamma_B = \frac{\tan\alpha_{a1}}{\tan\alpha_{vt}} - 1 - \frac{2\pi \cdot \cos\delta_1}{z_1 \tan\alpha_{vt}}$
C	:	Point with parameter equal to 0	$\Gamma_C = 0$
M	:	Intermediate point between A and E	$\Gamma_M = 0{,}5\ (\Gamma_A + \Gamma_E)$
D	:	Upper point of single pair tooth contact	$\Gamma_D = -\frac{\tan\delta_2}{\tan\delta_1}\left(\frac{\tan\alpha_{a2}}{\tan\alpha_{vt}} - 1\right) + \frac{2\pi \cdot \cos\delta_1}{z_1 \tan\alpha_{vt}}$
DE	:	Intermediate point between D and E	$\Gamma_{DE} = 0{,}5\ (\Gamma_D + \Gamma_E)$
EU	:	Upper end point of buttressing effect	$\Gamma_{EU} = \Gamma_E - 0{,}2 \sin\beta_{vb}$
E	:	Upper end point of the path of contact	$\Gamma_E = \frac{\tan\alpha_{a1}}{\tan\alpha_{vt}} - 1$
Note 1: $\alpha_{\alpha\alpha}$: Transverse tip pressure angle of pinion and wheel, in rad: $\cos\alpha_{ai} = \frac{\cos\alpha_{vt}}{1 + 2h_{f0i} \cdot (\cos\delta_i)/d_{mi}}$			

3.6.9 Transverse unit load w_{Bt}

The transverse unit load w_{Bt} is calculated according to the following formula:

$$w_{Bt} = K_A \cdot K_V \cdot K_{H\beta} \cdot K_{H\alpha} \cdot K_\gamma \cdot \frac{F_{mt}}{b}$$

where:

K_A : Application factor (see [3.3.2])

K_V : Dynamic factor (see [3.3.4])

$K_{H\beta}$: Face load distribution factor (see [3.3.5])

$K_{H\alpha}$: Transverse load distribution factor (see [3.3.6])

K_γ : Load sharing factor (see [3.3.3]).

3.6.10 Interfacial bulk temperature Θ_{Mi}

The interfacial bulk temperature Θ_{Mi} may be suitably averaged from the two overall bulk temperatures of the teeth in contact, Θ_{M1} and Θ_{M2}. An estimation of Θ_{Mi}, given in [2.6.10], could be used in general configurations.

3.6.11 Scuffing temperature Θ_σ

The scuffing temperature Θ_S may be determined according to the following formula:

$$\Theta_S = 80 + (0{,}85 + 1{,}4\ X_W) \cdot X_L \cdot (S_{FZG} - 1)^2$$

where:

X_W : Structural factor given in Tab 27

X_L : Lubricant factor given in Tab 25

S_{FZG} : Load stage where scuffing occurs, according to gear tests, such as Ryder, FZG-Ryder, FZG L-42 or FZG A/8 3/90.

4 Design and construction - except tooth load capacity

4.1 Materials

4.1.1 General

a) Forged, rolled and cast materials used in the manufacturing of shafts, couplings, pinions and wheels are to comply with the requirements of NR216 Materials and Welding.

b) Materials other than steels will be given special consideration by the Society.

Requirements mentioned in Ch 1, Sec 1, [3.7.2] are to be applied when other materials than steel are used for components in contact with flammable fluids.

4.1.2 Steels for pinions and wheel rims

a) Steels intended for pinions and wheels are to be selected considering their compatibility in service. In particular, for through-hardened pinion / wheel pairs, the hardness of the pinion teeth is to exceed that of the corresponding wheel. For this purpose, the minimum tensile strength of the pinion material is to exceed that of the wheel by at least 15%.

b) The minimum tensile strength of the core is not to be less than:

- 750 N/mm^2 for case-hardened teeth
- 800 N/mm^2 for induction-hardened or nitrided teeth.

4.2 Teeth

4.2.1 Manufacturing accuracy

a) Mean roughness (peak-to-valley) of shaved or ground teeth is not to exceed 4 µm.

b) Wheels are to be cut by cutters with a method suitable for the expected type and quality. Whenever necessary, the cutting is to be carried out in a temperature-controlled environment.

4.2.2 Tooth root

Teeth are to be well faired and rounded at the root. The fillet radius at the root of the teeth, within a plane normal to the teeth, is to be not less than 0,25 m_n.

Profile-grinding of gear teeth is to be performed in such a way that no notches are left in the fillet.

4.2.3 Tooth tips and ends

a) All sharp edges on the tips and ends of gear teeth are to be removed after cutting and finishing of teeth.

b) Where the ratio b/d exceeds 0,3, the ends of pinion and wheel are to be chamfered to an angle between 45 and 60 degrees. The chamfering depth is to be at least equal to 1,5 m_n.

4.2.4 Surface treatment

a) The hardened layer on surface-hardened gear teeth is to be uniform and extended over the whole tooth flank and fillet.

b) Where the pinions and the toothed portions of the wheels are case-hardened and tempered, the teeth flanks are to be ground while the bottom lands of the teeth remain only case-hardened. The superficial hardness of the case-hardened zone is to be at least equal to 56 C Rockwell units.

c) Where the pinions and the toothed portions of the wheels are nitrided, the hardened layer is to comply with Tab 33.

d) The use of other processes of superficial hardening of the teeth, such as flame hardening, will be given special consideration, in particular as regards the values to be adopted for $\sigma_{H,lim}$ and σ_{FE}.

Table 33 : Characteristics of the hardened layer for nitrided gears

Type of steel	Minimum thickness of hardened layer, in mm **(1)**	Minimum hardness (HV)
Nitrided steel	0,6	500 (at 0,25 mm depth)
Other steels	0,3	450 (surface)
(1) Depth of the hardened layer where the hardness is reduced to the core hardness. When the grinding of nitrided teeth is performed, the depth of the hardened layer to be taken into account is the depth after grinding.		

4.3 Wheels and pinions

4.3.1 General

Wheel bodies are to be so designed that radial deflexions and distortions under load are prevented, so as to ensure a satisfactory meshing of teeth.

4.3.2 Welding

a) Where welding is employed for the construction of wheels, the welding procedure is to be submitted to the Society for approval. Welding processes and their qualification are to comply with NR216 Materials and Welding.

b) Stress relieving treatment is to be performed after welding.

c) Examination of the welded joints is to be performed by means of magnetic particle or dye penetrant tests to the satisfaction of the Surveyor. Suitable arrangements are to be made to permit the examination of the internal side of the welded joints.

4.3.3 Shrink-fits

a) The shrink-fit assembly of:
- rim and wheel body, and
- wheel body and shaft

is to be designed with a safety factor against slippage of not less than 2,8 c where c is a coefficient having the following values:
- c = 1 for gears driven by turbines or electric motors
- c = 1 for gears driven by diesel engines through a hydraulic, electromagnetic or high elasticity coupling
- c = 1,2 in the other cases.

Note 1: The manufacturer is to ensure that the maximum torque transmitted during the clutch engagement does not exceed the nominal torque by more than 20%.

b) The shrink-fit assembly is to take into account the thermal expansion differential between the shrunk-on parts in the service conditions.

4.3.4 Bolting

Where rims and hubs are joined together through bolted side plates or flanges, the assembly is to be secured:
- by tight fit bolts, or
- by bolts and tight fit pins.

The nuts are to be suitably locked by means other than welding.

4.4 Shafts and bearings

4.4.1 General

Shafts and their connections, in particular flange couplings and shrink-fits connections, are to comply with the provisions of Ch 1, Sec 7.

4.4.2 Pinion and wheel shafts

The minimum diameter of pinion and gear wheel shafts is not to be less than the value d_S, in mm, given by the following formula:

$$d_S = \left\{ \left[\left(10{,}2 + \frac{28000}{R_{S,min}} \right) T \right]^2 + \left[\frac{170000}{412 + R_{s,min}} M \right]^2 \right\}^{\frac{1}{6}} \left(\frac{1}{1 - K_d^{\,4}} \right)^{\frac{1}{3}}$$

where:

$R_{S,min}$: Minimum yield strength of the shaft material, in N/mm²

T : Nominal torque transmitted by the shaft, in Nm

M : Bending moment on the shaft, in Nm

K_d : Coefficient having the following values:
- for solid shafts: $K_d = 0$
- for hollow shafts, K_d is equal to the ratio of the hole diameter to the outer shaft diameter.
  Where $K_d \leq 0{,}3$: $K_d = 0$ may be taken.

Note 1: The values of d_S, T and M refer to the cross-section of the shaft concerned.

As an alternative to the above formula, the Society may accept direct strength calculations considering static and fatigue stresses occurring simultaneously and assuming safety factors for the material employed of at least:
- 1,5 in respect of the yield strength
- 2,0 in respect of the alternating bending fatigue limit.

4.4.3 Quill shafts

The minimum diameter of quill shafts subject to torque only is not to be less than the value d_{QS}, in mm, given by the following formula:

$$d_{QS} = \left[\left(7{,}65 + \frac{27000}{R_{S,min}} \right) \cdot \frac{T}{1 - K_d^{\,4}} \right]^{\frac{1}{3}}$$

$R_{S,min}$ and K_d being defined in [4.4.2].

4.4.4 Bearings

a) Thrust bearings and their supports are to be so designed as to avoid detrimental deflexions under load.

b) Life duration of bearings is not to be less than 40 000 hours. Shorter durations may be accepted on the basis of the actual load time distribution, and subject to the agreement of the owner.

4.5 Casings

4.5.1 General

Manufacturers are to build gear casings of sufficient stiffness such that misalignment, external loads and thermal effects in all service conditions do not adversely affect the overall tooth contact.

4.5.2 Welded casings

a) Carbon content of steels used for the construction of welded casings is to comply with the provisions of NR216 Materials and Welding.

b) The welded joints are to be so arranged that welding and inspection can be performed satisfactorily. They are to be of the full penetration type.

c) Welded casings are to be stress-relieved after welding.

4.5.3 Openings

Access or inspection openings of sufficient size are to be provided to permit the examination of the teeth and the structure of the wheels.

4.6 Lubrication

4.6.1 General

a) Manufacturers are to take care of the following points:
- reliable lubrication of gear meshes and bearings is ensured:
  - over the whole speed range, including starting, stopping and, where applicable, manoeuvring
  - for all angles stated in Ch 1, Sec 1, [2.4]
- in multi-propellers plants not fitted with shaft brakes, provision is to be made to ensure lubrication of gears likely to be affected by windmilling.

b) Lubrication by means other than oil circulation under pressure will be given special consideration.

4.6.2 Pumps

a) Gears intended for propulsion or other essential services are to be provided with:
- one main lubricating pump, capable of maintaining a sufficient lubrication of the gearbox in the whole speed range
- and one standby pump independently driven of at least the same capacity.

b) In the case of:
- gears having a transmitted power not exceeding 375 kW
- or multi-engines plants

one of the pumps mentioned in a) may be a spare pump ready to be connected to the reduction gear lubricating oil system, provided disassembling and reassembling operations can be carried out on board in a short time.

4.6.3 Filtration

a) Forced lubrication systems are to be fitted with a device which efficiently filters the oil in the circuit.

b) When fitted to gears intended for propulsion machinery or machinery driving electric propulsion generators, such filters are to be so arranged that they can be easily cleaned without stopping the lubrication of the machines.

4.7 Control and monitoring

4.7.1 Gears are to be provided with the alarms and safeguards listed in Tab 34.

Table 34 : Indications, alarms and safeguards for gears

Symbol convention H = High, HH = High high, G = group alarm L = Low, LL = Low low, I = individual alarm X = function is required, R = remote	Monitoring		Automatic control				
			Main Engine			Auxiliary	
Identification of system parameter	Alarm	Indication	Slow-down	Shut-down	Control	Stand by Start	Stop
Lubricating oil temperature at the oil cooler outlet		local					
Lubricating oil pressure		local					
	L **(1)**			X			
Oil tank level		local					
(1) May be omitted in case of restricted navigation notation.							

5 Installation

5.1 General

5.1.1 Manufacturers and shipyards are to take care directly that stiffness of gear seating and alignment conditions of gears are such as not to adversely affect the overall tooth contact and the bearing loads under all operating conditions of the ship.

5.2 Fitting of gears

5.2.1 Means such as stoppers or fitted bolts are to be arranged in the case of gears subject to propeller thrust. However, where the thrust is transmitted by friction and the relevant safety factor is not less than 2, such means may be omitted.

6 Certification, inspection and testing

6.1 General

6.1.1

a) Inspection and testing of shafts and their connections (flange couplings, hubs, bolts, pins) are to be carried out in accordance with the provisions of Ch 1, Sec 7.

b) For inspection of welded joints of wheels, refer to [4.3.2].

6.2 Workshop inspection and testing

6.2.1 Testing of materials

Chemical composition and mechanical properties are to be tested in accordance with the applicable requirements of NR216 Materials and Welding, Chapter 5 for the following items:

- pinions and wheel bodies
- rims
- plates and other elements intended for propulsion gear casings of welded construction.

6.2.2 Testing of pinion and wheel forgings

a) Mechanical tests of pinions and wheels are to be carried out in accordance with:
   - NR216 Materials and Welding, Ch 5, Sec 5, [1.6] for normalised and tempered or quenched and tempered forgings
   - NR216 Materials and Welding, Ch 5, Sec 5, [1.7] for surface-hardened forgings.

b) Non-destructive examination of pinion and wheel forgings is to be performed in accordance with NR216 Materials and Welding, Ch 5, Sec 5, [1.8].

6.2.3 Balancing test

Rotating components, in particular gear wheel and pinion shaft assemblies with the coupling part attached, are to undergo a static balancing test.

Where $n^2.d \geq 1,5.10^9$, gear wheel and pinion shaft assemblies are also to undergo a dynamic balancing test.

6.2.4 Verification of cutting accuracy

Examination of the accuracy of tooth cutting is to be performed in the presence of the Surveyor. Records of measurements of errors, tolerances and clearances of teeth are to be submitted at the request of the Surveyor.

6.2.5 Meshing test

a) A tooth meshing test is to be performed in the presence of the Surveyor. This test is to be carried out at a load sufficient to ensure tooth contact, with the journals located in the bearings according to the normal running conditions. Before the test, the tooth surface is to be coated with a thin layer of suitable coloured compound.

b) The results of such test are to demonstrate that the tooth contact is adequately distributed on the length of the teeth. Strong contact marks at the end of the teeth are not acceptable.

c) A permanent record of the tooth contact is to be made for the purpose of subsequent checking of alignment following installation on board.

d) For type approved cylindrical gears, with a power not greater than 375 kW and a cast casing, the above required workshop meshing test could be waived at the Surveyor satisfaction.

6.2.6 Hydrostatic tests

a) Hydraulic or pneumatic clutches are to be hydrostatically tested before assembly to 1,5 times the maximum working pressure of the pumps.

b) Pressure piping, pumps casings, valves and other fittings are to be hydrostatically tested in accordance with the requirements of Ch 1, Sec 10, [20].

Section 7 Main Propulsion Shafting

1 General

1.1 Application

1.1.1 This Section applies to shafts, couplings, clutches and other shafting components transmitting power for main propulsion. In addition, main propulsion machinery components are to comply with the requirements listed in Tab 1.

Table 1 : Rule requirements for main propulsion components

Item		Reference
Power transmission equipment	Diesel engines	Ch 1, Sec 2
	Turbines	Ch 1, Sec 4, Ch 1, Sec 5
	Gear	Ch 1, Sec 6
	Propellers	Ch 1, Sec 8
	Thrusters	Ch 1, Sec 15
Shaft line analysis	Shaft alignment	Ch 1, Sec 7
	Torsional vibration	Ch 1, Sec 9
Additional requirements	Navigation in ice	Pt F, Ch 8, Sec 3

1.2 Documentation to be submitted

1.2.1 The Manufacturer is to submit to the Society the documents listed in Tab 2 for approval.
Plans of power transmitting parts and shaft liners listed in Tab 2 are to include the relevant material specifications.

Table 2 : Documentation to be submitted

No.	Document (drawings, calculations, etc.)
1	Shafting arrangement **(1)**
2	Thrust shaft
3	Intermediate shafts
4	Propeller shaft
5	Shaft liners, relevant manufacture and welding procedures, if any
6	Couplings and coupling bolts
7	Flexible couplings **(2)**
8	Sterntube
9	Details of sterntube glands
10	Oil piping diagram for oil lubricated propeller shaft bearings
11	Shaft alignment calculation, see also [3.4]

(1) This drawing is to show the entire shafting, from the main engine coupling flange to the propeller. The location of the thrust block, and the location and number of shafting bearings (type of material and length) are also to be shown.

(2) The Manufacturer of the elastic coupling is also to submit the following data:
- allowable mean transmitted torque (static) for continuous operation
- maximum allowable shock torque
- maximum allowable speed of rotation
- maximum allowable values for radial, axial and angular misalignment

In addition, when the torsional vibration calculation of main propulsion system is required (see Ch 1, Sec 9), the following data are also to be submitted:
- allowable alternating torque amplitude and power loss for continuous operation, as a function of frequency and/or mean transmitted torque
- static and dynamic stiffness, as a function of frequency and/or mean transmitted torque
- moments of inertia of the primary and secondary halves of the coupling
- damping coefficient or damping capability
- properties of rubber components
- for steel springs of couplings: chemical composition and mechanical properties of steel employed.

2 Design and construction

2.1 Materials

2.1.1 General

The use of other materials or steels having values of tensile strength exceeding the limits given in [2.1.2], [2.1.3] and [2.1.4] will be considered by the Society in each case.

2.1.2 Shaft materials

Where shafts may experience vibratory stresses close permissible stresses for transient operation (see Ch 1, Sec 9), the materials are to have a specified minimum ultimate tensile strength R_m of 500 N/mm^2. Otherwise materials having a specified minimum ultimate tensile strength R_m of 400 N/mm^2 may be used.

For use in the following formulae in this Section, R_m is limited as follows:

- For carbon and carbon manganese steels, R_m is not exceed 760 N/mm^2
- For alloy steels, R_m is not to exceed 800 N/mm^2
- For propeller shafts, R_m is not to exceed 600 N/mm^2 (for carbon, carbon manganese and alloy steels).

Where materials with greater specified or actual tensile strengths than the limitations given above are used, reduced shaft dimensions are not acceptable when derived from the formulae given in this Section unless the Society verifies that the materials exhibit similar fatigue life as conventional steels (see Ch 1, App 6).

2.1.3 Couplings, flexible couplings, hydraulic couplings

Non-solid forged couplings and stiff parts of elastic couplings subjected to torque are to be of forged or cast steel, or nodular cast iron.

Rotating parts of hydraulic couplings may be of grey cast iron, provided that the peripheral speed does not exceed 40m/s.

2.1.4 Coupling bolts

Coupling bolts are to be of forged, rolled or drawn steel.

In general, the value of the tensile strength of the bolt material R_{mB} is to comply with the following requirements:

- $R_m \leq R_{mB} \leq 1,7\ R_m$
- $R_{mB} \leq 1000$ N/mm^2.

2.1.5 Shaft liners

Liners are to be of metallic corrosion resistant material complying with the applicable requirements of NR216 Materials and Welding and with the approved specification, if any; in the case of liners fabricated in welded lengths, the material is to be recognised as suitable for welding.

In general, they are to be manufactured from castings.

For small shafts, the use of liners manufactured from pipes instead of castings may be considered.

Where shafts are protected against contact with seawater not by metal liners but by other protective coatings, the coating procedure is to be approved by the Society.

2.1.6 Sterntubes

Sterntubes are to comply with the requirements of Pt B, Ch 11, Sec 3, [4.5].

2.2 Shafts - Scantling

2.2.1 General

The provisions of this sub-article apply to propulsion shafts such as an intermediate and propeller shafts of traditional straight forged design and which are driven by rotating machines such as diesel engines, turbines or electric motors.

For shafts that are integral to equipment, such as for gear boxes, podded drives, electrical motors and/or generators, thrusters, turbines and which in general incorporate particular design features, additional criteria in relation to acceptable dimensions have to be taken into account. For the shafts in such equipment, the provisions of this sub-article apply only to shafts subject mainly to torsion and having traditional design features. Other shafts will be given special consideration by the Society.

2.2.2 Alternative calculation methods

Alternative calculation methods may be considered by the Society. Any alternative calculation method is to include all relevant loads on the complete dynamic shafting system under all permissible operating conditions. Consideration is to be given to the dimensions and arrangements of all shaft connections.

Moreover, an alternative calculation method is to take into account design criteria for continuous and transient operating loads (dimensioning for fatigue strength) and for peak operating loads (dimensioning for yield strength). The fatigue strength analysis may be carried out separately for different load assumptions

2.2.3 Shafts diameters

The diameter of intermediate shafts, thrust shafts and propellers shafts is not to be less than that determined from the following formula:

$$d = F \cdot k \cdot \left[\frac{P}{n \cdot (1 - Q^4)} \cdot \frac{560}{R_m + 160} \right]^{1/3}$$

where:

d : Minimum required diameter in mm

Q : Factor equal to d_i / d_o , where:

- d_i : Actual diameter of the shaft bore, in mm (to be taken as 0 for solid shafts)
- d_o : Outside diameter of the shaft, in mm.

Note 1: Where $d_i \leq 0,4\ d_o$, Q may be taken as 0.

F : Factor for type of propulsion installation equal to:

- 95 for intermediate and thrusts shafts in turbine installations, diesel installations with hydraulic (slip type) couplings and electric propulsion installations
- 100 for all other diesel installation and all propeller shafts.

k : Factor for the particular shaft design features, see Tab 3

n : Speed of rotation of the shaft, in revolution per minute, corresponding to power P

P : Maximum continuous power of the propulsion machinery for which the classification is requested, in kW

R_m : Specified minimum tensile strength of the shaft material, in N/mm², see [2.1.2].

The diameter of the propeller shaft located forward of the inboard stern tube seal may be gradually reduced to the corresponding diameter required for the intermediate shaft using the minimum specified tensile strength of the propeller shaft in the formula and recognising any limitations given in [2.1.2].

Note 2: Transitions of diameters are to be designed with either a smooth taper or a blending radius equal to the change in diameter.

Table 3 : Values of factor k

For intermediate shafts with						For thrust shafts external to engines		propeller shafts		
straight sections and integral coupling flange **(1)**	shrink fit coupling **(2)**	keyway, tapered connection **(3) (4)**	keyway, cylindrical connection **(3) (4)**	radial hole **(5)**	longitudinal slots **(6)**	on both sides of thrust collar **(1)**	in way of bearing when a roller bearing is used	flange mounted or keyless taper fitted propellers **(7)**	key fitted propellers **(7)**	between forward end of aft most bearing and forward stern tube seal
1,00	1,00	1,10	1,10	1,10	1,20	1,10	1,10	1,22	1,26	1,15

(1) The fillet radius is to be in accordance with the provisions of [2.5.1].

(2) k values refer to the plain shaft section only. Where shafts may experience vibratory stresses close to permissible stresses for continuous operation, an increase in diameter to the shrink fit diameter is to be provided, e.g. a diameter increase of 1 to 2% and a blending radius as described in [2.2.3] Note 2.

(3) At a distance of not less than 0,2 d_o from the end of the keyway the shaft diameter may be reduced to the diameter calculated with k = 1,0.

(4) Keyways are to be in accordance with the provisions of [2.5.5].

(5) Diameter of the radial bore is not to exceed 0,3 d_o.

(6) Subject to limitations as $\ell/d_o < 0,8$ and $d_i/d_o < 0,7$ and $e/d_o > 0,15$, where:

- ℓ : slot length in mm
- e : slot width in mm

The end rounding of the slot is not to be less than e/2. an edge rounding should preferably be avoided as this increases the stress concentration slightly.

The k value is valid for 1, 2, 3 slots, i.e. with slots at 360 respectively 180 and respectively 120 degrees apart.

(7) Applicable to the portion of the propeller shaft between the forward edge of the aftermost shaft bearing and the forward face of the propeller hub (or shaft flange), but not less than 2,5 times the required diameter.

2.3 Liners

2.3.1 General

Metal liners or other protective coatings approved by the Society are required where propeller shafts are not made of corrosion-resistant material.

Metal liners are generally to be continuous; however, discontinuous liners, i.e. liners consisting of two or more separate lengths, may be accepted by the Society on a case by case basis, provided that:

- they are fitted in way of all supports
- the shaft portion between liners, likely to come into contact with sea water, is protected with a coating of suitable material with characteristics, fitting method and thickness approved by the Society.

2.3.2 Scantling

The thickness of metal liners fitted on propeller shafts or on intermediate shafts inside sterntubes is to be not less than the value t, in mm, given by the following formula:

$$t = \frac{d + 230}{32}$$

where:

d : Actual diameter of the shaft, in mm.

Between the sternbushes, the above thickness t may be reduced by 25%.

2.4 Stern tube bearings

2.4.1 Oil lubricated aft bearings of antifriction metal

a) The length of bearings lined with white metal or other antifriction metal is to be not less than twice the rule diameter of the shaft in way of the bearing.

b) The length of the bearing may be less than that given in (a) above, provided the nominal bearing pressure is not more than 0,8 N/mm^2, as determined by static bearing reaction calculations taking into account shaft and propeller weight, as exerting solely on the aft bearing, divided by the projected area of the shaft.

However, the minimum bearing length is to be not less than 1,5 times its actual inner diameter.

2.4.2 Oil lubricated aft bearings of synthetic rubber, reinforced resin or plastics material

a) For bearings of synthetic rubber, reinforced resin or plastics material which are approved by the Society for use as oil lubricated sternbush bearings, the length of the bearing is to be not less than twice the rule diameter of the shaft in way of the bearing.

b) The length of the bearing may be less than that given in (a) above provided the nominal bearing pressure is not more than 0,6 N/mm^2, as determined according to [2.4.1] b).

However, the minimum length of the bearing is to be not less than 1,5 times its actual inner diameter.

Where the material has proven satisfactory testing and operating experience, consideration may be given to an increased bearing pressure.

c) Synthetic materials for application as oil lubricated stern tube bearings are to be of an approved type.

2.4.3 Water lubricated aft bearings

a) The length of the bearing is to be not less than 4 times the rule diameter of the shaft in way of the bearing.

b) For a bearing of synthetic material, consideration may be given to a bearing length less than 4 times, but in no case less than 2 times, the rule diameter of the shaft in way of the bearing, provided the bearing design and material is substantiated by experiments to the satisfaction of the Society.

c) Synthetic materials for application as water lubricated stern tube bearings are to be Type Approved by the Society.

2.4.4 Grease lubricated bearings

The length of grease lubricated bearings is to be not less than 4 times the rule diameter of the shaft in way of the bearing.

2.4.5 Oil or grease lubrication system

a) For oil lubricated bearings, provision for oil cooling is to be made.

A gravity tank is to be fitted to supply lubricating oil to the sterntube; the tank is to be located above the full load waterline.

Oil sealing glands are to be suitable for the various sea water temperatures which may be encountered in service.

b) Grease lubricated bearings will be specially considered by the Society.

2.4.6 Water circulation system

For water lubricated bearings, means are to be provided to ensure efficient water circulation. In case of open loop systems, the sea water suction is normally to be from a sea chest.

The water grooves on the bearings are to be of ample section such as to ensure efficient water circulation and be scarcely affected by wear, particularly for bearings of the plastic type.

The shut-off valve or cock controlling the water supply is to be fitted direct to the stuffing box bulkhead or in way of the water inlet to the sterntube, when this is fitted forward of such bulkhead.

2.5 Couplings

2.5.1 Flange couplings

a) Flange couplings of intermediate and thrust shafts and the flange of the forward coupling of the propeller shaft are to have a thickness not less than 0,2 times the rule diameter of the solid intermediate shaft and not less than the coupling bolt diameter calculated for a tensile strength equal to that of the corresponding shaft.

The fillet radius at the base of solid forged flanges is to be not less than 0,08 times the actual shaft diameter.

The fillet may be formed of multi-radii in such a way that the stress concentration factor will not be greater than that for a circular fillet with radius 0,08 times the actual shaft diameter.

For non-solid forged flange couplings, the above fillet radius is not to cause a stress in the fillet higher than that caused in the solid forged flange as above.

Fillets are to have a smooth finish and are not to be recessed in way of nuts and bolt heads.

b) Where the propeller is connected to an integral propeller shaft flange, the thickness of the flange is to be not less than 0,25 times the rule diameter of the aft part of the propeller shaft. The fillet radius at the base of the flange is to be not less than 0,125 times the actual diameter.

The strength of coupling bolts of the propeller boss to the flange is to be equivalent to that of the aft part of the propeller shaft.

c) Non-solid forged flange couplings and associated keys are to be of a strength equivalent to that of the shaft.

They are to be carefully fitted and shrunk on to the shafts, and the connection is to be such as to reliably resist the vibratory torque and astern pull.

d) For couplings of intermediate and thrust shafts and for the forward coupling of the propeller shaft having all fitted coupling bolts, the coupling bolt diameter in way of the joining faces of flanges is not to be less than the value d_B, in mm, given by the following formula:

$$d_B = 0{,}65 \cdot \left[\frac{d^3 \cdot (R_m + 160)}{n_B \cdot D_C \cdot R_{mB}}\right]^{0,5}$$

where:

d	:	Rule diameter of solid intermediate shaft, in mm, taking into account the ice strengthening requirements of Pt F, Ch 8, Sec 3, where applicable
n_B	:	Number of fitted coupling bolts
D_C	:	Pitch circle diameter of coupling bolts, in mm
R_m	:	Value of the minimum tensile strength of intermediate shaft material taken for calculation of d, in N/mm²
R_{mB}	:	Value of the minimum tensile strength of coupling bolt material, in N/mm². Where, in compliance with [2.1.1], the use of a steel having R_{mB} in excess of the limits specified in [2.1.4] is allowed for coupling bolts, the value of R_{mB} to be introduced in the formula is not exceed the above limits.

e) Flange couplings with non-fitted coupling bolts may be accepted on the basis of the calculation of bolt tightening, bolt stress due to tightening, and assembly instructions.

To this end, the torque based on friction between the mating surfaces of flanges is not to be less than 2,8 times the transmitted torque, assuming a friction coefficient for steel on steel of 0,18. In addition, the bolt stress due to tightening in way of the minimum cross-section is not to exceed 0,8 times the minimum yield strength (R_{eH}), or 0,2 proof stress ($R_{p\,0,2}$), of the bolt material.

Transmitted torque has the following meanings:

- For main propulsion systems powered by diesel engines fitted with slip type or high elasticity couplings, by turbines or by electric motors: the mean transmitted torque corresponding to the maximum continuous power P and the relevant speed of rotation n, as defined under [2.2.3].
- For main propulsion systems powered by diesel engines fitted with couplings other than those mentioned in (a): the mean torque above increased by 20% or by the torque due to torsional vibrations, whichever is the greater.

The value 2,8 above may be reduced to 2,5 in the following cases:

- ships having two or more main propulsion shafts
- when the transmitted torque is obtained, for the whole functioning rotational speed range, as the sum of the nominal torque and the alternate torque due to the torsional vibrations, calculated as required in Ch 1, Sec 9.

2.5.2 Shrunk couplings

Non-integral couplings which are shrunk on the shaft by means of the oil pressure injection method or by other means may be accepted on the basis of the calculation of shrinking and induced stresses, and assembly instructions.

To this end, the force due to friction between the mating surfaces is not to be less than 2,8 times the total force due to the transmitted torque and thrust.

The value 2,8 above may be reduced to 2,5 in the cases specified under item e) of [2.5.1].

The values of 0,14 and 0,18 will be taken for the friction coefficient in the case of shrinking under oil pressure and dry shrink fitting, respectively.

In addition, the equivalent stress due to shrinkage determined by means of the von Mises-Hencky criterion in the points of maximum stress of the coupling is not to exceed 0,8 times the minimum yield strength (R_{eH}), or 0,2% proof stress ($R_{p0,2}$), of the material of the part concerned.

The transmitted torque is that defined under item e) of [2.5.1].

For the determination of the thrust, see Ch 1, Sec 8, [3.1.2].

2.5.3 Other couplings

Types of couplings other than those mentioned in [2.5.1] and [2.5.2] will be specially considered by the Society.

2.5.4 Flexible couplings

a) The scantlings of stiff parts of flexible couplings subjected to torque are to be in compliance with the requirements of Article [2].

b) For flexible components, the limits specified by the Manufacturer relevant to static and dynamic torque, speed of rotation and dissipated power are not to be exceeded.

c) Where all the engine power is transmitted through one flexible component only (ships with one propulsion engine and one shafting only), the flexible coupling is to be fitted with a torsional limit device or other suitable means to lock the coupling should the flexible component break.

   In stiff transmission conditions with the above locking device, a sufficiently wide speed range is to be provided, free from excessive torsional vibrations, such as to enable safe navigation and steering of the ship. As an alternative, a spare flexible element is to be provided on board.

2.5.5 Propeller shaft keys and keyways

a) Keyed connections are in general not to be used in installations with a barred speed range.

b) Keyways

   Keyways on the propeller shaft cone are to comply with the following requirements (see Fig 1).

   Keyways are to have well rounded corners, with the forward end faired and preferably spooned, so as to minimize notch effects and stress concentrations.

   The fillet radius at the bottom of the keyway is to be not less than 1,25% of the actual propeller shaft diameter at the large end of the cone.

   The distance from the large end of the propeller shaft cone to the forward end of the key is to be not less than 20% of the actual propeller shaft diameter in way of the large end of the cone.

   Key securing screws are not to be located within the first one-third of the cone length from its large end; the edges of the holes are to be carefully faired.

Note 1: Different scantlings may be accepted, provided that at least the same reduction in stress concentration is ensured.

c) Keys

   The sectional area of the key subject to shear stress is to be not less than the value A, in mm², given by the following formula:

$$A = 0,4 \cdot \frac{d^3}{d_{PM}}$$

   where:

   d : Rule diameter, in mm, of the intermediate shaft calculated in compliance with the requirements of [2.2.3], assuming:

   R_m = 400 N/mm²

   d_{PM} : Actual diameter of propeller shaft at mid-length of the key, in mm.

   The edges of the key are to be rounded.

Figure 1 : Details of forward end of propeller shaft keyway

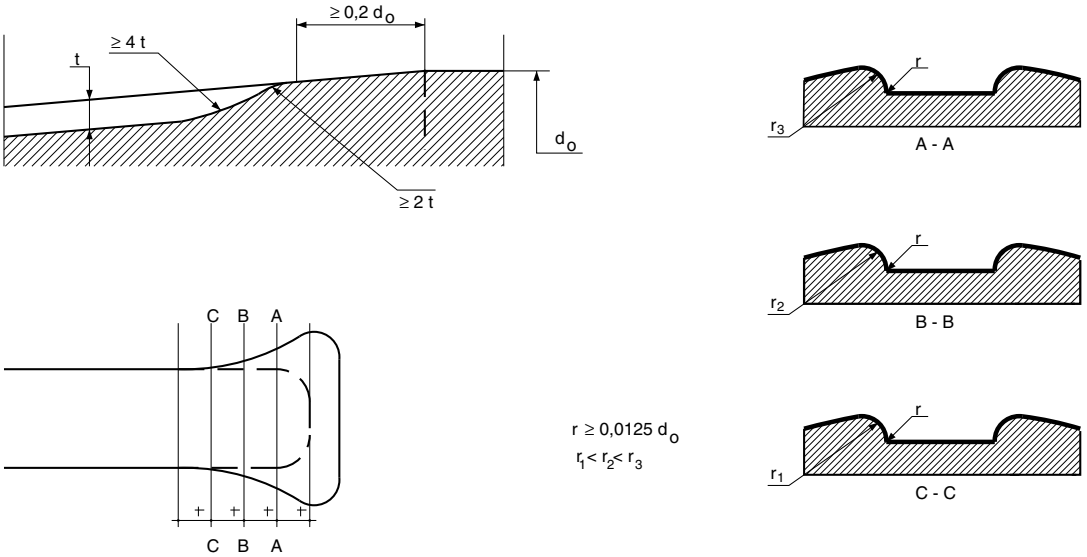

2.6 Design of oil control systems for clutches

2.6.1 Separate oil systems intended for the control of clutches are to include at least two power pumps, of such a capacity as to maintain normal control with any one pump out of action.

2.6.2 In the case of propulsion plants comprising:

- more than one shaft line with the clutches fitted with their own control system, or
- one engine with an output not exceeding 220 kW

one of the pumps mentioned in [2.6.1] may be a spare pump ready to be connected to the oil control system, provided disassembling and reassembling operations can be carried out on board in a short time.

2.6.3 However, when the propulsion plant comprises one or more engines, each with an output not exceeding 220 kW, the standby or spare pump may be omitted for the clutches provided that they are so designed as to be fixed mechanically in the "clutched" position and that the capacity of the starting means ensures the number of starts required in such conditions.

2.7 Monitoring

2.7.1 General

In addition to those given in this item, the requirements of Part C, Chapter 3 apply.

2.7.2 Propeller shaft monitoring

For the assignment of the propeller shaft monitoring system notation, see Pt F, Ch 5, Sec 2.

2.7.3 Indicators

The local indicators for main propulsion shafting to be installed on ships of 500 gross tonnage and upwards without automation notations are given in Tab 4. For monitoring of engines, turbines, gears, controllable pitch propellers and thrusters, see Ch 1, Sec 2, Ch 1, Sec 5, Ch 1, Sec 6, Ch 1, Sec 8 and Ch 1, Sec 15, respectively.

The indicators listed in Tab 4 are to be fitted at a normally attended position.

Table 4 : Shafting and clutches of propulsion machinery

Symbol convention H = High, HH = High high, G = group alarm L = Low, LL = Low low, I = individual alarm X = function is required, R = remote	Monitoring		Automatic control				
			Main Engine			Auxiliary	
Identification of system parameter	Alarm	Indication	Slow-down	Shut-down	Control	Stand by Start	Stop
Temperature of each shaft thrust bearing (non applicable for ball or roller bearings)	H		X				
Stern tube bush oil gravity tank level	L						
Clutches lubricating oil temperature	H		X				
Clutches oil tank level	L						

3 Arrangement and installation

3.1 General

3.1.1 The installation is to be carried out according to the instructions of the component Manufacturer or approved documents, when required.

3.1.2 The installation of sterntubes and/or associated non-shrunk bearings is subject to approval of procedures and materials used.

3.1.3 The joints between liner parts are not to be located in way of supports and sealing glands.

Metal liners are to be shrunk on to the shafts by pre-heating or forced on by hydraulic pressure with adequate interference; dowels, screws or other means of securing the liners to the shafts are not acceptable.

3.2 Protection of propeller shaft against corrosion

3.2.1 The propeller shaft surface between the propeller and the sterntube, and in way of propeller nut, is to be suitably protected in order to prevent any entry of sea water, unless the shaft is made of austenitic stainless steel.

3.3 Shaft alignment for ships granted with a notation ESA

3.3.1 Application

Ships having the additional service feature or additional class notation **ESA**, as described respectively in Pt A, Ch 1, Sec 2, [4.1.5] and in Pt A, Ch 1, Sec 2, [6.25.8], are to comply with the requirements of Rule Note NR592 Elastic Shaft Alignment.

For ships to which the additional class notation **MON SHAFT** is assigned and with a water lubricated shaft, the shaft alignment calculations are to be performed for both initial conditions (new bearings) and conditions of maximum permissible wear according to the bearing manufacturer's recommendations and deemed satisfactory by the Society (see Pt F, Ch 5, Sec 2, [3.1.6]).

3.4 Shaft alignment for ships not granted with a notation ESA

3.4.1 General

For ships to which the notation **ESA** is not assigned, shaft alignment calculations and shaft alignment procedures are to be submitted for review in the following cases:

- propulsion plants with a shaft diameter of 300 mm or greater in way of the aftermost bearing, whether or not they comprise a gearbox
- geared propulsion plants with power take-in (PTI) or power take-off (PTO), where the shaft diameter in way of the aftermost bearing is 150 mm or greater.

For ships to which the additional class notation **MON SHAFT** is assigned and with a water lubricated shaft, the shaft alignment calculations are to be performed for both initial conditions (new bearings) and conditions of maximum permissible wear according to the bearing manufacturer's recommendations and deemed satisfactory by the Society (see Pt F, Ch 5, Sec 2, [3.1.6]).

3.4.2 Shaft alignment calculations

a) Scope of the calculations

The shaft alignment calculations are to be carried out in the following conditions:

1) alignment conditions during the shafting installation (ship in dry dock or afloat with propeller partly immersed)
2) cold, static, afloat conditions
3) hot, static, afloat conditions
4) hot, running conditions.

Note 1: Vertical and horizontal calculations are to carried out, as deemed relevant.

b) Information to be submitted

The shaft alignment calculation report should contain the following information:

1) Description of the shaftline model:
   - length, diameters and density of material for each shaft
   - definition of the reference line
   - longitudinal, vertical and horizontal position of the bearing with respect to the reference line
   - bearings characteristics: material, length, clearance.

2) Input parameters
   - hydrodynamic propeller loads (horizontal and vertical forces and moments)
   - weight and buoyancy effect of the propeller, depending on the propeller immersion corresponding to the different loading cases of the ship
   - engine power and rotational speed of the propeller (for calculations in running conditions)
   - machining data of aft bush slope boring
   - for slow speed engines, equivalent model of the crankshaft, with indication of the input loads
   - for geared installation, gear tooth forces and moments
   - thermal expansion of the gearbox or of the main engine between cold and hot conditions
   - jack-up location.
3) Limits
   - limits specified by engine or gearbox manufacturer (such as allowable bearing loads, allowable moments and forces at the shaft couplings)
   - allowable loads specified by bearing manufacturer.
4) Results
   - bearings influence coefficients table
   - expected bearing reactions, for the different calculation conditions
   - expected shaft deflections, shear forces and bending moments alongside the shaftline, for the different calculation conditions
   - gap and sag values (depending on the alignment method)
   - jack-up correction factors.

c) Acceptability criteria for the calculations

The results of the shaft alignment calculations are to comply with the following acceptability criteria:

- Relative slope between propeller shaft and aftermost boring axis is not to exceed 0,3 mm/m
- all bearings are to remain loaded
- loads on intermediate shaft bearings are not to exceed 80% of the maximum permissible load specified by the manufacturer
- stern tube bearing loads are not to exceed the limits stated in [2.4].

3.4.3 Shaft alignment procedure

The shaft alignment procedure is to be submitted for review and is to be consistent with the shaft alignment calculations.

The shaft alignment procedure should include at least the following:

- Ship conditions in which the alignment is to be carried out (drafts, propeller immersion, engine room temperature)
- Method used for establishing the reference line (using laser or optical instruments or piano wire)
- Description of the different steps of the shafting installation:
  - bearing slope boring
  - setting of the bearing offset and installation of the temporary shaft support (where relevant) in accordance with the results of the shaft alignment calculation
  - flange coupling parameter setting (gap and sag)
  - bearing load test (jack-up test).

3.4.4 Verification of the alignment procedure

The purpose of the verification procedure is to ensure that the alignment measurements comply with the calculated values. The shaft alignment verification procedure is described in Ch 1, Sec 18, [3.11.1].

The shaft alignment verification is to be carried out by the shipyard in presence of the Surveyor and submitted to the Society.

The criteria for acceptability of the alignment conditions include the following:

- the position of the two aftermost bearings should not differ from the specified offsets by more than ± 0,1 mm.
- Gap and sag values should not differ from the calculated values by more than ± 0,1 mm.
- Bearing loads should not differ from the calculated values by more than ± 20%.

4 Material tests, workshop inspection and testing, certification

4.1 Material and non-destructive tests, workshop inspections and testing

4.1.1 Material tests

Shafting components are to be tested by the Manufacturer in accordance with Tab 5 and in compliance with the requirements of NR216 Materials and Welding.

Magnetic particle or liquid penetrant tests are required for the parts listed in Tab 5 and are to be effected in positions agreed upon by the Surveyor, where Manufacturer's experience shows defects are most likely to occur.

Ultrasonic testing requires the Manufacturer's signed certificate.

4.1.2 Hydrostatic tests

Parts of hydraulic couplings, clutches of hydraulic reverse gears and control units, hubs and hydraulic cylinders of controllable pitch propellers, including piping systems and associated fittings, are to be hydrostatically tested to1,5 times the maximum working pressure.

Sterntubes, when machine-finished, and propeller shaft liners, when machine-finished on the inside and with an overthickness not exceeding 3 mm on the outside, are to be hydrostatically tested to 0,2 N/mm^2.

4.2 Certification

4.2.1 Testing certification

Society's certificates (C) (see NR216 Materials and Welding, Ch 1, Sec 1, [4.2.1]) are required for material tests of components in items 1 to 5 of Tab 5.

Works' certificates (W) (see NR216 Materials and Welding, Ch 1, Sec 1, [4.2.3]) are required for hydrostatic tests of components indicated in [4.1.2] and for material and non-destructive tests of components in items of Tab 5 other than those for which Society's certificates (C) are required.

Table 5 : Material and non-destructive tests

Shafting component	Material tests (Mechanical properties and chemical composition)	Non-destructive tests	
		Magnetic particle or liquid penetrant	Ultrasonic
1) Coupling (separate from shafts)	all	if diameter ≥ 100 mm **(1)**	if diameter ≥ 200 mm **(1)**
2) Propeller shafts	all	if diameter ≥ 100 mm **(1)**	if diameter ≥ 200 mm **(1)**
3) Intermediate shafts	all	if diameter ≥ 100 mm **(1)**	if diameter ≥ 200 mm **(1)**
4) Thrust shafts	all	if diameter ≥ 100 mm **(1)**	if diameter ≥ 200 mm **(1)**
5) Cardan shafts (flanges, crosses, shafts, yokes)	all	if diameter ≥ 100 mm **(1)**	if diameter ≥ 200 mm **(1)**
6) Sterntubes	all	–	–
7) Sterntube bushes and other shaft bearings	all	–	–
8) Propeller shaft liners	all	–	–
9) Coupling bolts or studs	all	–	–
10) Flexible couplings (metallic parts only)	all	–	–
11) Thrust sliding-blocks (frame only)	all	–	–
(1) 150 mm in case of a rolled bar used in place of a forging			

Section 8 Propellers

1 General

1.1 Application

1.1.1 Propulsion propellers

The requirements of this Section apply to propellers of any size and type intended for propulsion. They include fixed and controllable pitch propellers, including those ducted in fixed nozzles.

1.1.2 Exclusions

The requirements of this Section do not apply to propellers and impellers in bow and stern thrusters, which are covered in Ch 1, Sec 15, or to propellers for ships with ice strengthening, which are covered in Pt F, Ch 8, Sec 3.

1.2 Definitions

1.2.1 Solid propeller

A solid propeller is a propeller (including hub and blades) cast in one piece.

1.2.2 Built-up propeller

A built-up propeller is a propeller cast in more than one piece. In general, built up propellers have the blades cast separately and fixed to the hub by a system of bolts and studs.

1.2.3 Controllable pitch propellers

Controllable pitch propellers are built-up propellers which include in the hub a mechanism to rotate the blades in order to have the possibility of controlling the propeller pitch in different service conditions.

1.2.4 Nozzle

A nozzle is a circular structural casing enclosing the propeller.

1.2.5 Ducted propeller

A ducted propeller is a propeller installed in a nozzle.

1.2.6 Geometry of propeller

For all geometrical definitions (see Fig 1):

a) Blade area and area ratio

- A_P : Projected blade area, i.e. projection of the blade area in the direction of the propeller shaft
- A_D : Developed blade area, i.e. area enclosed by the connection line between the end points of the cylindrical profile sections turned in the propeller plane
- A_E : Expanded blade area, i.e. area enclosed by the connection line between the end points of the developed and additionally straightened sections
- A_O : Disc area calculated by means of the propeller diameter
- B : Developed area ratio with $B = A_D / A_O$

b) Rake and rake angle

- h : Rake is the horizontal distance between the line connecting the blade tip to the blade root and the vertical line crossing the propeller axis in the same point where the prolongation of the first line crosses it, taken in correspondence of the blade tip. Aft rakes are considered positive, fore rakes are considered negative.

Rake angle is the angle at any point between the tangent to the generating line of the blade at that point and a vertical line passing at the same point. If the blade generating line is straight, there is only one rake angle; if it is curved there are an infinite number of rake angles.

c) Skew angle at tip of blade

- ϑ : Skew angle at the tip of blade, i.e. the angle on the projected blade plane between a line starting at the centre of the propeller axis and tangent to the blade midchord line and a line also starting at the centre of the propeller axis and passing at the outer end of this midchord line as measured.

d) Skewed propellers

Skewed propellers are propellers whose blades have a skew angle other than 0.

e) Leading and trailing edges

LE : Leading edge of a propeller blade, i.e. the edge of the blade at side entering the water while the propeller rotates

TE : Trailing edge of a propeller blade, i.e. the edge of the blade opposite to the leading edge.

1.2.7 Rake angle

Rake angle is the angle at any point between the tangent to the generating line of the blade at that point and a vertical line passing at the same point. If the blade generating line is straight, there is only one rake angle; if it is curved there are an infinite number of rake angles (see Fig 1).

1.2.8 Skew angle

Skew angle is the angle between a ray starting at the centre of the propeller axis and tangent to the blade midchord line and a ray also starting at the centre of the propeller axis and passing at the blade tip (see Fig 1).

1.2.9 Skewed propellers

Skewed propellers are propellers whose blades have a skew angle other than 0.

1.2.10 Highly skewed propellers and very highly skewed propellers

Highly skewed propellers are propellers having blades with skew angle exceeding 25°. Very highly skewed propellers are propellers having blades with skew angle exceeding 50°.

Figure 1 : Description of propeller

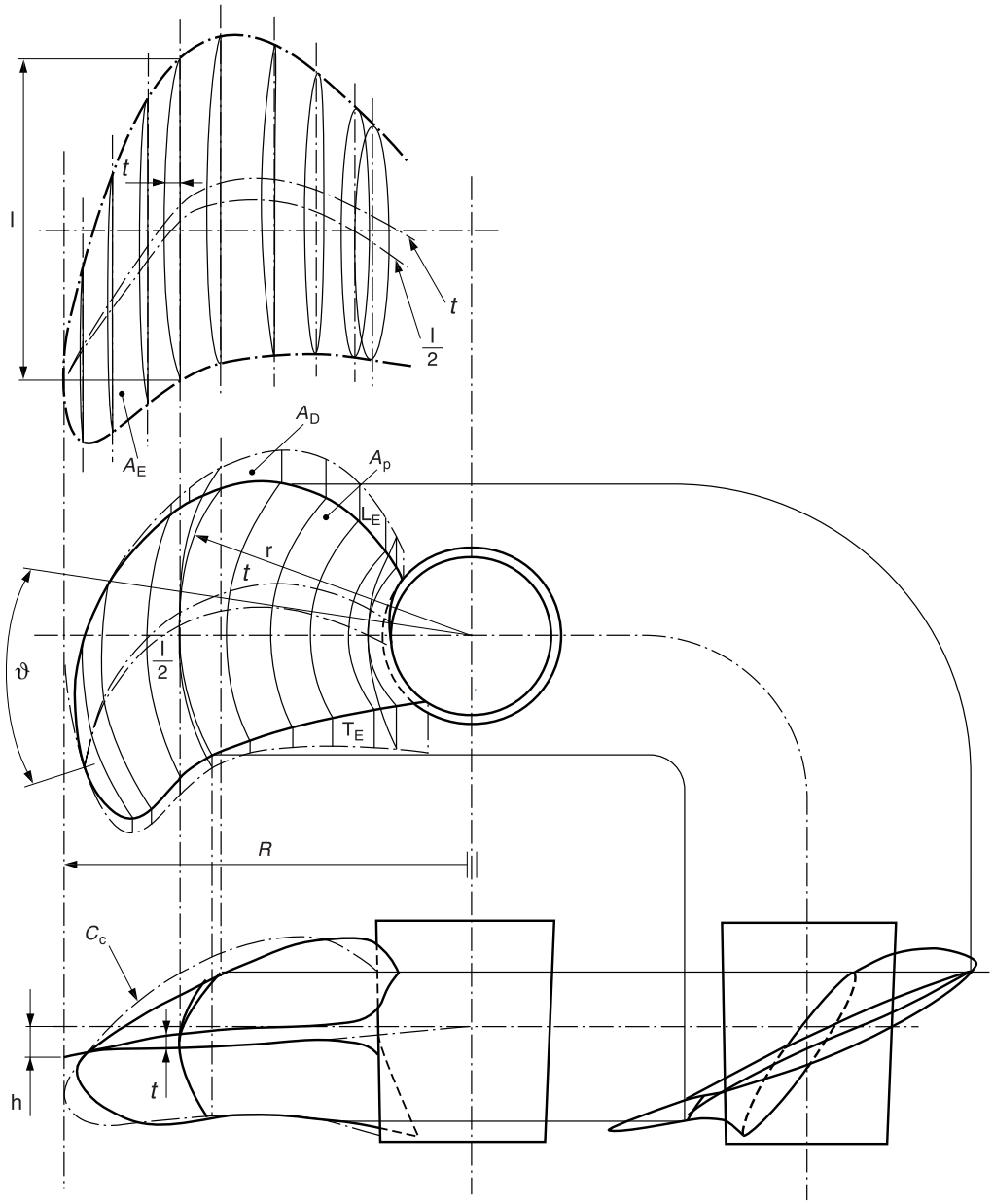

1.2.11 Leading edge

The leading edge of a propeller blade is the edge of the blade at side entering the water while the propeller rotates (see Fig 1).

1.2.12 Trailing edge

The trailing edge of a propeller blade is the edge of the blade opposite the leading edge (see Fig 1).

1.2.13 Blade developed area

Blade developed area is the area of the blade surface expanded in one plane.

1.2.14 Developed area ratio

Developed area ratio is the ratio of the total blade developed area to the area of the ring included between the propeller diameter and the hub diameter.

1.3 Documentation to be submitted

1.3.1 Solid propellers

The documents listed in Tab 1 are to be submitted for solid propellers intended for propulsion.

All listed plans are to be constructional plans complete with all dimensions and are to contain full indication of types of materials employed.

Table 1 : Documents to be submitted for solid propellers

No.	A/I **(1)**	ITEM
1	A	Sectional assembly
2	A	Blade and hub details
3	I	Rating (power, rpm, etc.)
4	A	Data and procedures for fitting propeller to the shaft
(1) A = to be submitted for approval ; I = to be submitted for information		

1.3.2 Built-up and controllable pitch propellers

The documents listed in Tab 2, as applicable, are to be submitted for built-up and controllable pitch propellers intended for propulsion.

Table 2 : Documents to be submitted for built-up and controllable pitch propellers

No.	A/I **(1)**	ITEM
1	A/I	Same documents requested for solid propellers
2	A	Blade bolts and pre-tensioning procedures
3	I	Pitch corresponding to maximum propeller thrust and to normal service condition
4	A	Pitch control mechanism
5	A	Pitch control hydraulic system
(1) A = to be submitted for approval ; I = to be submitted for information		

1.3.3 Very highly skewed propellers and propellers of unusual design

For very highly skewed propellers and propellers of unusual design, in addition to the documents listed in Tab 1 and Tab 2, as applicable, a detailed hydrodynamic load and stress analysis is to be submitted (see [2.4.3]).

2 Design and construction

2.1 Materials

2.1.1 Normally used materials for propeller hubs and blades

a) Tab 3 indicates the minimum tensile strength R_m (in N/mm^2), the density δ (in kg/dm^3) and the material factor f of normally used materials.

b) Common bronze, special types of bronze and cast steel used for the construction of propeller hubs and blades are to have a minimum tensile strength of 400 N/mm^2.

c) Other materials are subject of special consideration by the Society following submission of full material specification.

Table 3 : Normally used materials for propeller blades and hub

Material	R_m	δ	f
Common bronze	400	8,3	7,6
Manganese bronze	440	8,3	7,6
Nickel-manganese bronze	440	8,3	7,9
Aluminium bronze	590	7,6	8,3
Steel	440	7,9	9,0

2.1.2 Materials for studs

In general, steel (preferably nickel-steel) is to be used for manufacturing the studs connecting steel blades to the hub of built-up or controllable pitch propellers, and high tensile brass or stainless steel is to be used for studs connecting bronze blades.

2.2 Solid propellers - Blade thickness

2.2.1

a) The maximum thickness $t_{0.25}$, in mm, of the solid propeller blade at the section at 0,25 radius from the propeller axis is not to be less than that obtained from the following formula:

$$t_{0,25} = 3,2\left[f \cdot \frac{1,5.10^6.\rho.M_T + 51.\delta.\left(\frac{D}{100}\right)^3.B.l.N^2.h}{l \cdot z \cdot R_m}\right]^{0,5}$$

where:

f : Material factor as indicated in Tab 3

ρ : $\rho = D/H$

H : Mean pitch of propeller, in m. When H is not known, the pitch at 0,7 radius from the propeller axis $H_{0,7}$ may be used instead of H

D : Propeller diameter, in m

M_T : Continuous transmitted torque, in kN.m; where not indicated, the value given by the following formula may be assumed for M_T:

$$M_T = 9,55 \cdot \left(\frac{P}{N}\right)$$

P : Maximum continuous power of propulsion machinery, in kW

N : Rotational speed of the propeller, in rev/min

δ : Density of blade material, in kg/dm³, as indicated in Tab 3

B : Developed area ratio

h : Rake, in mm

l : Expanded width of blade section at 0,25 radius from propeller axis, in mm

z : Number of blades

R_m : Minimum tensile strength of blade material, in N/mm².

b) The maximum thickness $t_{0.6}$, in mm, of the solid propeller blade at the section at 0,6 radius from the propeller axis is not to be less than that obtained from the following formula:

$$t_{0,6} = 1,9\left[f \frac{1,5.10^6.\rho_{0,6}.M_T + 18,4.\delta.\left(\frac{D}{100}\right)^3.B.l.N^2.h}{l_{0,6} \cdot z \cdot R_m}\right]^{0,5}$$

where:

$\rho_{0,6}$: $D/H_{0.6}$

$H_{0.6}$: Pitch at 0,6 radius from the propeller axis, in m

$l_{0.6}$: Expanded width of blade section at 0,6 radius from propeller axis, in mm.

c) The radius at the blade root is to be at least 3/4 of the minimum thickness required in that position. As an alternative, constant stress fillets may also be considered. When measuring the thickness of the blade, the increased thickness due to the radius of the fillet at the root of the blade is not to be taken into account. If the propeller hub extends over 0,25 radius, the thickness calculated by the formula in a) is to be compared with the thickness obtained by linear interpolation of the actual blade thickness up to 0,25 radius.

d) As an alternative to the above formulae, a detailed hydrodynamic load and stress analysis carried out by the propeller designer may be considered by the Society, on a case by case basis. The safety factor to be used in this analysis is not to be less than 8 with respect to the ultimate tensile strength of the propeller material R_m.

2.3 Built-up propellers and controllable pitch propellers

2.3.1 Blade thickness

a) The maximum thickness $t_{0.35}$, in mm, of the blade at the section at 0,35 radius from the propeller axis is not to be less than that obtained from the following formula:

$$t_{0,35} = 2,7\left[f\,\frac{1,5.10^6.\rho_{0,7}.M_T + 41.\delta\left(\frac{D}{100}\right)^3 B.l_{0,35}.N^2h}{l_{0,35}\cdot z\cdot R_m}\right]^{0,5}$$

where:

$\rho_{0,7} = D / H_{0.7}$

$H_{0.7}$: Pitch at 0,7 radius from the propeller axis, in m. The pitch to be used in the formula is the actual pitch of the propeller when the propeller develops the maximum thrust

$l_{0.35}$: Expanded width of blade section at 0,35 radius from propeller axis, in mm.

b) The maximum thickness $t_{0.6}$, in mm, of the propeller blade at the section at 0,6 radius from the propeller axis is not to be less than that obtained from the formula in [2.2.1] b), using the value of $l_{0,35}$ in lieu of l.

c) The radius at the blade root is to be at least ¾ of the minimum thickness required in that position. As an alternative, constant stress fillets may also be considered. When measuring the thickness of the blade, the increased thickness due to the radius of the fillet at the root of the blade is not to be taken into account.

d) As an alternative to the above formulae, a detailed hydrodynamic load and stress analysis carried out by the propeller designer may be considered by the Society, on a case by case basis. The safety factor to be used in this analysis is not to be less than 8 with respect to the ultimate tensile strength of the propeller blade material R_m.

2.3.2 Flanges for connection of blades to hubs

a) The diameter D_F, in mm, of the flange for connection to the propeller hub is not to be less than that obtained from the following formula:

$$D_F = D_C + 1,8d_{PR}$$

where:

D_C : Stud pitch circle diameter, in mm

d_{PR} : Diameter of studs.

b) The thickness of the flange is not to be less than 1/10 of the diameter D_F.

2.3.3 Connecting studs

a) The diameter d_{PR}, in mm, at the bottom of the thread of the studs is not to be less than obtained from the following formula:

$$d_{PR} = \left(\frac{4,6.10^7.\rho_{0,7}.M_T + 0,88.\delta.\left(\frac{D}{10}\right)^3.B.l_{0,35}.N^2.h_1}{n_{PR}\cdot z\cdot D_C\cdot R_{m,PR}}\right)^{0,5}$$

where:

h_1 : $h_1 = h + 1,125\ D_C$

n_{PR} : Total number of studs in each blade

$R_{m,PR}$: Minimum tensile strength of stud material, in N/mm².

b) The studs are to be tightened in a controlled manner such that the tension on the studs is approximately 60-70% of their yield strength.

c) The shank of studs may be designed with a minimum diameter equal to 0,9 times the root diameter of the thread.

d) The studs are to be properly secured against unintentional loosening.

2.4 Skewed propellers

2.4.1 Skewed propellers

The thickness of skewed propeller blades may be obtained by the formulae in [2.2] and [2.3.1], as applicable, provided the skew angle is less than 25°.

2.4.2 Highly skewed propellers

a) For solid and controllable pitch propellers having skew angles between 25° and 50°, the blade thickness, in mm, is not to be less than that obtained from the following formulae:

1) For solid propellers

$$t_{S-0,25} = t_{0,25} \cdot (0,92 + 0,0032\vartheta)$$

2) For built-up and controllable pitch propellers

$$t_{S-0,35} = t_{0,35} \cdot (0,9 + 0,004\vartheta)$$

3) For all propellers

$$t_{S-0,6} = t_{0,6} \cdot (0,74 + 0,0129\vartheta - 0,0001\vartheta^2)$$

$$t_{S-0,9} = t_{0,6} \cdot (0,35 + 0,0015\vartheta)$$

where:

$t_{S-0,25}$: Maximum thickness, in mm, of skewed propeller blade at the section at 0,25 radius from the propeller axis

$t_{0,25}$: Maximum thickness, in mm, of normal shape propeller blade at the section at 0,25 radius from the propeller axis, obtained by the formula in [2.2.1]

$t_{S-0,35}$: Maximum thickness, in mm, of skewed propeller blade at the section at 0,35 radius from the propeller axis

$t_{0,35}$: Maximum thickness, in mm, of normal shape propeller blade at the section at 0,35 radius from the propeller axis, obtained by the formula in [2.3.1]

$t_{S-0,6}$: Maximum thickness, in mm, of skewed propeller blade at the section at 0,6 radius from the propeller axis

$t_{0,6}$: Maximum thickness, in mm, of normal shape propeller blade at the section at 0,6 radius from the propeller axis, obtained by the formula in [2.2.1]

$t_{S-0,9}$: Maximum thickness, in mm, of skewed propeller blade at the section at 0,9 radius from the propeller axis

ϑ : Skew angle.

b) As an alternative, highly skewed propellers may be accepted on the basis of a stress analysis, as stated in [2.4.3] for very highly skewed propellers.

2.4.3 Very highly skewed propellers

For very highly skewed propellers, the blade thickness is to be obtained by the Manufacturer, using a stress analysis according to a calculation criteria accepted by the Society. The safety factor to be used in this direct analysis is not to be less than 9 with respect to the ultimate tensile strength of the propeller blade material, R_m.

2.5 Ducted propellers

2.5.1 The minimum blade thickness of propellers with wide tip blades running in nozzles is not to be less than the values obtained by the applicable formula in [2.2] or [2.3.1], increased by 10%.

2.6 Features

2.6.1 Blades and hubs

a) All parts of propellers are to be free of defects and are to be built and installed with clearances and tolerances in accordance with sound marine practice.

b) Particular care is to be taken with the surface finish of the blades.

2.6.2 Controllable pitch propellers pitch control system

a) Where the pitch control mechanism is operated hydraulically, two independent, power-driven pump sets are to be fitted. For propulsion plants up to 220 kW, one power-driven pump set is sufficient provided that, in addition, a hand-operated pump is fitted for controlling the blade pitch.

b) Pitch control systems are to be provided with an engine room indicator showing the actual setting of the blades. Further blade position indicators are to be mounted on the bridge and in the engine control room, if any.

c) Suitable devices are to be fitted to ensure that an alteration of the blade setting cannot overload the propulsion plant or cause it to stall.

d) Steps are to be taken to ensure that, in the event of failure of the control system, the setting of the blades
- does not change, or
- assumes a final position slowly enough to allow the emergency control system to be put into operation.

e) Controllable pitch propeller systems are to be equipped with means of emergency control enabling the controllable pitch propeller to operate when the remote control system fails. This requirement may be complied with by means of a device which locks the propeller blades in the “ahead” setting.

f) Tab 4 indicates the monitoring requirements to be displayed at the control console.

Table 4 : Controllable pitch propeller

Symbol convention H = High, HH = High high, G = group alarm L = Low, LL = Low low, I = individual alarm X = function is required, R = remote	Monitoring		Automatic control				
			Main Engine			Auxiliary	
Identification of system parameter	Alarm	Indication	Slow-down	Shut-down	Control	Stand by Start	Stop
Oil tank level	L						

3 Arrangement and installation

3.1 Fitting of propeller on the propeller shaft

3.1.1 General

a) Screw propeller hubs are to be properly adjusted and fitted on the propeller shaft cone.

b) The forward end of the hole in the hub is to have the edge rounded to a radius of approximately 6 mm.

c) In order to prevent any entry of sea water under the liner and onto the end of the propeller shaft, the arrangement of Fig 2 is generally to be adopted for assembling the liner and propeller boss.

d) The external stuffing gland is to be provided with a seawater resistant rubber ring preferably without joints. The clearance between the liner and the internal air space of the boss is to be as small as possible. The internal air space is to be filled with an appropriate protective material which is insoluble in sea water and non-corrodible or fitted with a rubber ring.

e) All free spaces between the propeller shaft cone, propeller boss, nut and propeller cap are to be filled with a material which is insoluble in sea water and non-corrodible. Arrangements are to be made to allow any air present in these spaces to withdraw at the moment of filling. It is recommended that these spaces be tested under a pressure at least equal to that corresponding to the immersion of the propeller in order to check the tightness obtained after filling.

f) For propeller keys and key area, see Ch 1, Sec 7, [2.5.5].

Figure 2 : Example of sealing arrangement

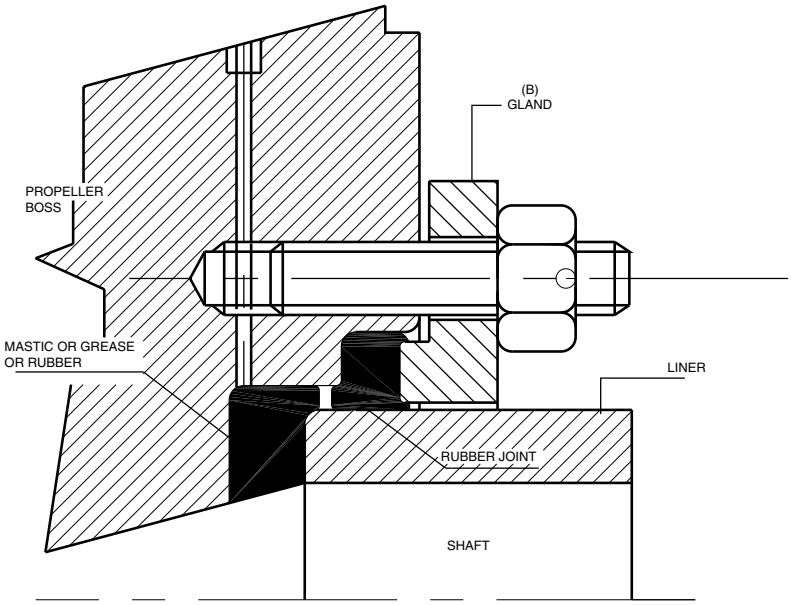

3.1.2 Shrinkage of keyless propellers

In the case of keyless shrinking of propellers, the following requirements apply:

a) The meaning of the symbols used in the subparagraphs below is as follows:

A : 100% theoretical contact area between propeller boss and shaft, as read from plans and disregarding oil grooves (i.e. oil grooves do not need to be subtracted), in mm^2

C :
- C = 1 for turbines, geared diesel engines, electrical drives and direct-drive reciprocating internal combustion engines with a hydraulic, electromagnetic or high elasticity coupling
- C = 1,2 for diesel engines having couplings other than those specified above.

The Society reserves the right to increase the value of C if the shrinkage needs to absorb an extremely high pulsating torque

d_{PM} : Diameter of propeller shaft at the mid-point of the taper in the axial direction, in mm
d_H : Mean outer diameter of propeller hub at the axial position corresponding to d_{PM}, in mm
d_{35} : Push-up length, in mm, at 35°C
d_T : Push-up length, in mm, at temperature T
d_{MAX} : Maximum permissible pull-up length, in mm, at 0°C
E_P : Value of the modulus of elasticity of shaft material, in N/ mm²
E_M : Value of the modulus of elasticity of boss material, in N/ mm²
F : Tangential force at interface, in N
K : $K = d_H/d_{PM}$
M_T : Continuous torque transmitted, in N.m; where not indicated, M_T may be assumed as indicated in [2.2.1]
p_{35} : Surface pressure between mating surfaces, in N/mm², at 35°C
p_T : Surface pressure, in N/mm², between mating surfaces at temperature T
p_0 : Surface pressure between mating surfaces, in N/mm², at 0°C
p_{MAX} : Maximum permissible surface pressure, in N/mm², at 0°C
$R_{S,MIN}$: Value of the minimum yield strength (R_{eH}), or 0,2% proof stress ($R_{p\,0,2}$), of propeller boss material, in N/mm²
$R_{m,B}$: Value of the minimum tensile strength of the propeller boss material, in N/mm²
S : Continuous thrust developed for free running ship, in N
s_F : Safety factor against friction slip at 35°C
T : Temperature of hub and propeller shaft material, in °C, assumed for calculation of pull-up length and push-up load
V : Ship speed at P power, in knots
W_T : Push-up load, in N, at temperature T
θ : Half taper of propeller shaft (for instance: taper = 1/15, θ =1/30)
μ : Coefficient of friction between mating surfaces
σ_{ID} : Equivalent uni-axial stress in the boss according to the von Mises-Hencky criterion, in N/mm²
α_P : Coefficient of linear expansion of shaft material, in mm/(mm°C)
α_M : Coefficient of linear expansion of boss material, in mm/(mm°C)
ν_P : Poisson's ratio for shaft material
ν_M : Poisson's ratio for boss material.

For other symbols not defined above, see [2.2].

b) The manufacturer is to submit together with the required constructional plans specifications containing all elements necessary for verifying the shrinkage. Tests and checks deemed necessary for verifying the characteristics and integrity of the propeller material are also to be specified.

c) Moreover, the manufacturer is to submit an instruction handbook, in which all operations and any precautions necessary for assembling and disassembling the propeller, as well as the values of all relevant parameters, are to be specified. A copy, endorsed by the Society, is to be kept on board each ship where the propeller is installed.

d) The formulae and other provisions below do not apply to propellers where a sleeve is introduced between shaft and boss or in the case of hollow propeller shafts. In such cases, a direct shrinkage calculation is to be submitted to the Society.

e) The taper of the propeller shaft cone is not to exceed 1/15.

f) Prior to final pull-up, the contact area between the mating surfaces is to be checked and is not to be less than 70% of the theoretical contact area (100%). Non-contact bands extending circumferentially around the boss or over the full length of the boss are not acceptable.

g) After final push-up, the propeller is to be secured by a nut on the propeller shaft. The nut is to be secured to the shaft.

h) The safety factor s_F against friction slip at 35°C is not to be less than 2,8, under the combined action of torque and propeller thrust, based on the maximum continuous power P for which classification is requested at the corresponding speed of rotation N of the propeller, plus pulsating torque due to torsionals.

i) For the oil injection method, the coefficient of friction μ is to be 0,13 in the case of bosses made of bronze, brass or steel. For other methods, the coefficient of friction will be considered in each case by the Society.

j) The maximum equivalent uni-axial stress in the boss at 0°C, based on the von Mises-Hencky criterion, is not to exceed 70% of the minimum yield strength (R_{eH}), or 0,2% proof stress ($R_{p0,2}$), of the propeller material, based on the test piece value. For cast iron, the value of the above stress is not to exceed 30% of the nominal tensile strength.

k) For the formulae given below, the material properties indicated in the following items are to be assumed:

- Modulus of elasticity, in N/mm²:
  Cast and forged steel: E = 206000
  Cast iron: E = 98000

Type Cu_1 and Cu_2 brass: E = 108000

Type Cu_3 and Cu_4 brass: E = 118000

- Poisson's ratio:

  Cast and forged steel: $\nu = 0,29$

  Cast iron: $\nu = 0,26$

  All copper based alloys: $\nu = 0,33$

- Coefficient of linear expansion in mm/(mm.°C)

  Cast and forged steel and cast iron: $\alpha = 12,0\ 10^{-6}$

  All copper based alloys: $\alpha = 17,5\ 10^{-6}$.

l) For shrinkage calculation the formulae in the following items, which are valid for the ahead condition, are to be applied. They will also provide a sufficient margin of safety in the astern condition.

- Minimum required surface pressure at 35°C:

$$p_{35} = \frac{s_F S}{AB} \cdot \left[-s_F\theta + \left(\mu^2 + B \cdot \frac{F^2}{S^2}\right)^{0,5} \right]$$

  where:

  $B = \mu^2 - s_F^2\theta^2$

- Corresponding minimum pull-up length at 35°C:

$$d_{35} = \frac{p_{35} d_{PM}}{2\theta} \cdot \left[\frac{1}{E_M} \cdot \left(\frac{K^2+1}{K^2-1} + \nu_M \right) + \frac{1-\nu_P}{E_P} \right]$$

- Minimum pull-up length at temperature T (T<35°C):

$$d_T = d_{35} + \frac{d_{PM}}{2\theta} \cdot (\alpha_M - \alpha_P) \cdot (35 - T)$$

- Corresponding minimum surface pressure at temperature T:

$$p_T = p_{35} \cdot \frac{d_T}{d_{35}}$$

- Minimum push-up load at temperature T:

$$W_T = A p_T \cdot (\mu + \theta)$$

- Maximum permissible surface pressure at 0°C:

  when the propeller boss is made of cast iron:

$$p_{MAX} = \frac{0,3 R_{m,B} \cdot (K^2 - 1)}{(3K^4 + 1)^{0,5}}$$

  when the propeller boss is made of other materials:

$$p_{MAX} = \frac{0,7 R_{S,MIN} \cdot (K^2 - 1)}{(3K^4 + 1)^{0,5}}$$

- Corresponding maximum permissible pull-up length at 0°C:

$$d_{MAX} = d_{35} \cdot \frac{p_{MAX}}{p_{35}}$$

- Tangential force at interface:

$$F = \frac{2000 C M_T}{d_{PM}}$$

- Continuous thrust developed for free running ship; if the actual value is not given, the value, in N, calculated by one of the following formulae may be considered:

$$S = 1760 \cdot \frac{P}{V}$$

$$S = 57,3 \cdot 10^3 \cdot \frac{P}{H \cdot N}$$

3.1.3 Circulating currents

Means are to be provided to prevent circulating electric currents from developing between the propeller and the hull. A description of the type of protection provided and its maintenance is to be kept on board.

4 Testing and certification

4.1 Material tests

4.1.1 Solid propellers

Material used for the construction of solid propellers is to be tested in accordance with the requirements of NR216 Materials and Welding in the presence of the Surveyor.

4.1.2 Built-up propellers and controllable pitch propellers

In addition to the requirement in [4.1.1], materials for studs and for all other parts of the mechanism transmitting torque are to be tested in the presence of the Surveyor.

4.2 Testing and inspection

4.2.1 Controllable pitch propellers

The complete hydraulic system for the control of the controllable pitch propeller mechanism is to be hydrotested at a pressure equal to 1,5 times the design pressure. The proper operation of the safety valve is to be tested in the presence of the Surveyor.

4.2.2 Balancing

Finished propellers are to be statically balanced in accordance with the specified ISO 484 tolerance class. However, for built-up and controllable pitch propellers, the required static balancing of the complete propeller may be replaced by an individual check of blade weight and gravity centre position.

Refer also to:

- NR216 Materials and Welding, Ch 6, Sec 8, [1.9.3] for stainless steel propeller blades, and
- NR216 Materials and Welding, Ch 8, Sec 3, [1.9.4] for copper alloy propeller blades.

4.3 Certification

4.3.1 Certification of propellers

Propellers having the characteristics indicated in [1.1.1] are to be individually tested and certified by the Society.

4.3.2 Mass produced propellers

Mass produced propellers of a type as mentioned in [1.1] may be accepted within the framework of the type approval program of the Society.

Section 9 Shaft Vibrations

1 General

1.1 Application

1.1.1 The requirements of this Section apply to the shafting of the following installations:

- propulsion systems with prime movers developing 220 kW or more
- other systems with internal combustion engines developing 110 kW or more and driving auxiliary machinery intended for essential services.

1.1.2 Exemptions

The requirements of this Section may be waived in cases where satisfactory service operation of similar installations is demonstrated.

2 Design of systems in respect of vibrations

2.1 Principle

2.1.1 General

a) *Special consideration shall be given* by Manufacturers *to the design, construction and installation of propulsion machinery systems so that any mode of their vibrations shall not cause undue stresses in these systems in the normal operating ranges.*

b) Calculations are to be carried out for the configurations of the system likely to have influence on the torsional vibrations.

c) Where deemed necessary by the Manufacturer, axial and/or bending vibrations are to be investigated.

2.1.2 Vibration levels

Systems are to have torsional, bending and axial vibrations both in continuous and in transient running acceptable to the Manufacturers, and in accordance with the requirements of this Section.

Where vibrations are found to exceed the limits stated in this Section, the builder of the plant is to propose corrective actions, such as:

- operating restrictions, provided that the owner is informed, or
- modification of the plant.

2.1.3 Condition of components

Systems are to be designed considering the following conditions, as deemed necessary by the Manufacturer:

- engine: cylinder malfunction
- flexible coupling: possible variation of the stiffness or damping characteristics due to heating or ageing
- vibration damper: possible variation of the damping coefficient.

2.2 Modifications of existing plants

2.2.1 Where substantial modifications of existing plants, such as:

- change of the running speed or power of the engine
- replacement of an important component of the system (propeller, flexible coupling, damper) by one of different characteristics, or
- connection of a new component

are carried out, new vibration analysis is to be submitted for approval.

3 Torsional vibrations

3.1 Documentation to be submitted

3.1.1 Calculations

Torsional vibration calculations are to be submitted for the various configurations of the plants, showing:

- the equivalent dynamic system used for the modelling of the plant, with indication of:
  - inertia and stiffness values for all the components of the system
  - outer and inner diameters and material properties of the shafts

- the natural frequencies
- the values of the vibratory torques or stresses in the components of the system for the most significant critical speeds and their analysis in respect of the Rules and other acceptance criteria
- the possible restrictions of operation of the plant.

3.1.2 Particulars to be submitted

The following particulars are to be submitted with the torsional vibration calculations:

a) for turbines, multi-engine installations or installations with power take-off systems:
   - description of the operating configurations
   - load sharing law between the various components for each configuration

b) for installations with controllable pitch propellers, the power/rotational speed values resulting from the combinator operation

c) for prime movers, the service speed range and the minimum speed at no load

d) for internal combustion engines:
   - manufacturer and type
   - nominal output and rotational speed
   - mean indicated pressure
   - number of cylinders
   - "V" angle
   - firing angles
   - bore and stroke
   - excitation data, such as the polynomial law of harmonic components of excitations
   - nominal alternating torsional stress considered for crankpin and journal

Note 1: The nominal alternating torsional stress is part of the basic data to be considered for the assessment of the crankshaft. It is defined in Ch 1, App 1.

e) for turbines:
   - nominal output and rotational speed
   - power/speed curve and range of operation
   - number of stages, and load sharing between the stages
   - main excitation orders for each rotating disc
   - structural damping of shafts
   - external damping on discs (due to the fluid)

f) for reduction or step-up gears, the speed ratio for each step

g) for flexible couplings:
   - the maximum torque
   - the nominal torque
   - the permissible vibratory torque
   - the permissible heat dissipation
   - the relative damping
   - the torsional dynamic stiffness / transmitted torque relation where relevant

h) for torsional vibration dampers:
   - the manufacturer and type
   - the permissible heat dissipation
   - the damping coefficient
   - the inertial and stiffness properties, as applicable

i) for propellers:
   - the type of propeller: ducted or not ducted
   - the number of propellers of the ship
   - the number of blades
   - the excitation and damping data, if available

j) for electric motors, generators and pumps, the drawing of the rotating parts, with their mass moment of inertia and main dimensions.

3.2 Definitions, symbols and units

3.2.1 Definitions

a) Torsional vibration stresses referred to in this Article are the stresses resulting from the alternating torque corresponding to the synthesis of the harmonic orders concerned.

b) The misfiring condition of an engine is the malfunction of one cylinder due to the absence of fuel injection (which results in a pure compression or expansion in the cylinder).

3.2.2 Symbols, units

The main symbols used in this Article are defined as follows:

τ : Torsional vibration stress, as defined in [3.2.1], in N/mm²

τ_1 : Permissible stress due to torsional vibrations for continuous operation, in N/mm²

τ_2 : Permissible stress due to torsional vibrations for transient running, in N/mm²

R_m : Tensile strength of the shaft material, as defined in Ch 1, Sec 7, [2.1.2], in N/mm²

C_R : Material factor, equal to:

$$\frac{R_m + 160}{18}$$

d : Minimum diameter of the shaft, in mm

C_D : Size factor of the shaft, equal to:

$0{,}35 + 0{,}93\ d^{-0{,}2}$

N : Speed of the shaft for which the check is carried out, in rev/min

N_n : Nominal speed of the shaft, in rev/min

N_c : Critical speed, in rev/min

λ : Speed ratio, equal to N/N_n

C_λ : Speed ratio factor, equal to:

- $3 - 2\lambda^2$ for $\lambda < 0{,}9$
- $1{,}38$ for $0{,}9 \le \lambda < 1{,}05$

C_k : Factor depending on the stress concentration factor of the shaft design features given in Tab 1.

Table 1 : Values of C_k factors

Intermediate shafts with							Thrust shafts external to engines		Propeller shafts		
straight sections and integral coupling flanges	shrink-fit couplings **(1)**	keyways, tapered connection **(2)**	keyways, cylindrical connection **(2)**	radial hole	longitudinal slot **(3)**	splined shafts	on both sides of thrust collar	in way of axial bearing where a roller bearing is used as a thrust bearing	flange mounted or keyless fitted propellers **(4)**	key fitted propellers **(4)**	between forward end of aft most bearing and forward stern tube seal
1,00	1,00	0,60	0.45	0.50	0.30	0,80	0,85	0,85	0,55	0,55	0.80

(1) C_k values refer to the plain shaft section only. Where shafts may experience vibratory stresses close to the permissible stresses for continuous operation, an increase in diameter to the shrink fit diameter is to be provided, e.g. a diameter increase of 1 to 2% and a blending radius as described in Ch 1, Sec 7, [2.5.1]

(2) Keyways are to be in accordance with the provisions of Ch 1, Sec 7, [2.5.1].

(3) Subject to limitations as $\ell/d_o < 0{,}8$ and $d_i/d_o < 0{,}7$ and $e/d_o > 0{,}15$, where:

ℓ : Slot length in mm

e : Slot width in mm

d_i, d_o : As per Sec 7, [2.2.3]

The C_k value is valid for 1, 2 and 3 slots, i.e. with slots at 360 respectively 180 and respectively 120 degrees apart.

(4) Applicable to the portion of the propeller shaft between the forward edge of the aftermost shaft bearing and the forward face of the propeller hub (or shaft flange), but not less than 2.5 times the required diameter.

Note 1: Higher values of C_k factors based on direct calculations may also be considered.

Note 2: The determination of C_k factors for shafts other than those given in this table will be given special consideration by the Society.

3.3 Calculation principles

3.3.1 Method

a) Torsional vibration calculations are to be carried out using a recognised method.

b) Where the calculation method does not include harmonic synthesis, attention is to be paid to the possible superimposition of two or more harmonic orders of different vibration modes which may be present in some restricted ranges.

3.3.2 Scope of the calculations

a) Torsional vibration calculations are to be carried out considering:
   - normal firing of all cylinders, and
   - misfiring of one cylinder.

b) Where the torsional dynamic stiffness of the coupling depends on the transmitted torque, two calculations are to be carried out:
   - one at full load
   - one at the minimum load expected in service.

c) For installations with controllable pitch propellers, two calculations are to be carried out:
   - one for full pitch condition
   - one for zero pitch condition.

d) The calculations are to take into account other possible sources of excitation, as deemed necessary by the Manufacturer. Electrical sources of excitations, such as static frequency converters, are to be detailed. The same applies to transient conditions such as engine start up, reversing, clutching in, as necessary.

e) The natural frequencies are to be considered up to a value corresponding to 15 times the maximum service speed. Therefore, the excitations are to include harmonic orders up to the fifteenth.

3.3.3 Criteria for acceptance of the torsional vibration loads under normal firing conditions

a) Torsional vibration stresses in the various shafts are not to exceed the limits defined in [3.4]. Higher limits calculated by an alternative method may be considered, subject to special examination by the Society.

   The limit for continuous running τ_1 may be exceeded only in the case of transient running in restricted speed ranges, which are defined in [3.4.5]. In no case are the torsional vibration stresses to exceed the limit for transient running τ_2.

   Propulsion systems are to be capable of running continuously without restrictions at least within the speed range between 0,8 N_n and 1,05 N_n. Transient running may be considered only in restricted speed ranges for speed ratios $\lambda \leq 0,8$.

   Auxiliary machinery is to be capable of running continuously without restrictions at least within the range between 0,95 N_n and 1,1 N_n. Transient running may be considered only in restricted speed ranges for speed ratios $\lambda \leq 0,95$.

b) Torsional vibration levels in other components are to comply with the provisions of [3.5].

c) The generating set is to show torsional vibration levels which are compatible with the allowable limits for the alternator, shafts, coupling and damper.

3.3.4 Criteria for acceptance of torsional vibration loads under misfiring conditions

a) The provisions of [3.3.3] related to normal firing conditions also apply to misfiring conditions.

Note 1: For propulsion systems operated at constant speed, restricted speed ranges related to misfiring conditions may be accepted for speed ratios $\lambda > 0,8$.

b) Where calculations show that the limits imposed for certain components may be exceeded under misfiring conditions, a suitable device is to be fitted to indicate the occurrence of such conditions.

3.4 Permissible limits for torsional vibration stresses in crankshaft, propulsion shafting and other transmission shafting

3.4.1 General

a) The limits provided below apply to steel shafts. For shafts made of other material, the permissible limits for torsional vibration stresses will be determined by the Society after examination of the results of fatigue tests carried out on the material concerned.

b) These limits apply to the torsional vibration stresses as defined in [3.2.1]. They relate to the shaft minimum section, without taking account of the possible stress concentrations.

3.4.2 Crankshaft

a) Where the crankshaft has been designed in accordance with Ch 1, App 1, the torsional vibration stresses in any point of the crankshaft are not to exceed the following limits:
   - $\tau_1 = \tau_N$ for continuous running
   - $\tau_2 = 1,7\ \tau_N$ for transient running,

   where τ_N is the nominal alternating torsional stress on which the crankshaft scantling is based (see Note 1 in [3.1.2]).

b) Where the crankshaft has not been designed in accordance with Ch 1, App 1, the torsional vibration stresses in any point of the crankshaft are not to exceed the following limits:
   - $\tau_1 = 0,55 \cdot C_R \cdot C_D \cdot C_\lambda$ for continuous running
   - $\tau_2 = 2,3\ \tau_1$ for transient running.

3.4.3 Intermediate shafts, thrust shafts and propeller shafts

The torsional vibration stresses in any intermediate, thrust and propeller shafts are not to exceed the following limits:

- $\tau_1 = C_R \cdot C_k \cdot C_D \cdot C_\lambda$ for continuous running
- $\tau_2 = 1,7\ \tau_1 \cdot C_k^{-0,5}$ for transient running.

3.4.4 Transmission shafting for generating sets and other auxiliary machinery

The torsional vibration stresses in the transmission shafting for generating sets and other auxiliary machinery, such as pumps or compressors, are not to exceed the following limits:

- $\tau_1 = 0,90 \cdot C_R \cdot C_D$ for continuous running
- $\tau_2 = 5,4\ \tau_1$ for transient running.

3.4.5 Restricted speed ranges

a) Where the torsional vibration stresses exceed the limit τ_1 for continuous running, restricted speed ranges are to be imposed which are to be passed through rapidly.

b) The limits of the restricted speed range related to a critical speed N_c are to be calculated in accordance with the following formula:

$$\frac{16 \cdot N_c}{18 - \lambda} \le N \le \frac{(18 - \lambda) \cdot N_c}{16}$$

c) Where the resonance curve of a critical speed is obtained from torsional vibration measurements, the restricted speed range may be established considering the speeds for which the stress limit for continuous running τ_1 is exceeded.

d) Where restricted speed ranges are imposed, they are to be crossed out on the tachometers and an instruction plate is to be fitted at the control stations indicating that:
   - the continuous operation of the engine within the considered speed range is not permitted
   - this speed range is to be passed through rapidly.

e) When restricted speed ranges are imposed, the accuracy of the tachometers is to be checked in such ranges as well as in their vicinity.

f) Restricted speed ranges in one-cylinder misfiring conditions of single propulsion engine ships are to enable safe navigation.

3.5 Permissible vibration levels in components other than shafts

3.5.1 Gears

a) The torsional vibration torque in any gear step is not to exceed 30% of the torque corresponding to the approved rating throughout the service speed range.

   Where the torque transmitted at nominal speed is less than that corresponding to the approved rating, higher torsional vibration torques may be accepted, subject to special consideration by the Society.

b) Gear hammering induced by torsional vibration torque reversal is not permitted throughout the service speed range, except during transient running at speed ratios $\lambda \le 0,3$.

   Where calculations show the existence of torsional vibration torque reversals for speed ratios $\lambda > 0,3$, the corresponding speed ranges are to be identified by appropriate investigations during sea trials and considered as restricted speed ranges in accordance with [3.4.5].

3.5.2 Generators

a) In the case of alternating current generators, the torsional vibration amplitude at the rotor is not to exceed ± 2,5 electrical degrees at service rotational speed under full load working conditions.

b) Vibratory inertia torques due to torsional vibrations and imposed on the rotating parts of the generator are not to exceed the values M_A, in N.m, calculated by the following formulae, as appropriate:
   - for $0,95 \le \lambda \le 1,1$: $M_A = \pm 2,5\ M_T$
   - for $\lambda \le 0,95$: $M_A = \pm 6\ M_T$

   where:

   M_T : Mean torque transmitted by the engine under full load running conditions, in N.m

   Note 1: In the case of two or more generators driven by the same engine, the portion of M_T transmitted to each generator is to be considered.

   λ : Speed ratio defined in [3.2.2].

3.5.3 Flexible couplings

a) Flexible couplings are to be capable of withstanding the mean transmitted torque and the torsional vibration torque throughout the service speed range, without exceeding the limits for continuous operation imposed by the manufacturer (permissible vibratory torque and power loss).

Where such limits are exceeded under misfiring conditions, appropriate restrictions of power or speed are to be established.

b) The coupling selection for the generating set is to take into account the stresses and torques imposed on it by the torsional vibration of the system.

c) Flexible couplings fitted in generating sets are also to be capable of withstanding the torques and twist angles arising from transient criticals and short-circuit currents. Start up conditions are also to be checked.

3.5.4 Dampers

a) Torsional vibration dampers are to be such that the permissible power loss recommended by the manufacturer is not exceeded throughout the service speed range.

b) Dampers for which a failure may lead to a significant vibration overload of the installation will be the subject of special consideration.

3.6 Torsional vibration measurements

3.6.1 General

a) The Society may require torsional vibration measurements to be carried out under its attendance in the following cases:
- where the calculations indicate the possibility of dangerous critical speeds in the operating speed range
- where doubts arise as to the actual stress amplitudes or critical speed location, or
- where restricted speed ranges need to be verified.

b) Where measurements are required, a comprehensive report including the analysis of the results is to be submitted to the Society.

3.6.2 Method of measurement

When measurements are required, the method of measurement is to be submitted to the Society for approval. The type of measuring equipment and the location of the measurement points are to be specified.

4 Bending vibrations

4.1 General

4.1.1 The provisions of this Article apply to the bending vibrations of propulsion systems having a transmitted power in excess of 1000 kW and:

- having a ℓ/D ratio exceeding the following value:

$$\frac{\ell}{D} = 10\left(\frac{\ln 2}{D}\right) + D^2$$

where:

ℓ : Span between the aft bearings of the propeller shaft, in m

D : Diameter of the propeller shaft, in m

or

- fitted with bearings located outboard the hull (brackets), or
- fitted with cardan shafts.

4.2 Documentation to be submitted

4.2.1 Particulars to be submitted

The following particulars are to be submitted with the bending vibration calculations:

- shafting arrangement with indication of:
  - the diameter and length of the shafts
  - the position of the bearings
  - the mounting characteristics of the cardan shafts
  - detailed drawings of the bearings and their seating
  - details of the bearing lubrication, including the oil viscosity
  - the diametrical and polar moments of inertia of the propeller in air and water
  - propeller mass entrained water

- where vibratory amplitudes and bending moment calculations are required (see [4.2.2] item b)):
  - excitations values (bending moments and bending forces)
  - damping values.

4.2.2 Calculations

a) Bending vibration calculations are to show:
   - the equivalent dynamic system used for the modelling of the plant, with indication of the mass of the shafts, propeller and other rotating components, and the lateral stiffness of the bearings, including that of the oil film and that of the seating
   - the natural bending frequencies and asociated mode shapes
   - the possible restrictions of operation of the plant.

b) Where bending vibration calculations show a risk of vibration resonance, restrictions of operations of the plant are identified, or where deemed necessary by the Society or the manufacturer, additional calculations are to be provided showing the values of the vibratory amplitudes, bending moments and stresses in the shafting for the most significant critical speeds.

4.3 Calculation principles

4.3.1 Scope of the calculations

Bending vibration calculations are to take into account:

- the stiffness of the bearings and their seatings and, where applicable, that of the lubricating oil film
- the excitations due to the propeller and cardan shafts.

Where data having a significant influence on the vibration levels cannot be determined with a sufficient degree of accuracy, parametric studies are to be carried out.

4.3.2 Criteria for acceptance of the bending vibration levels

a) The first shafting vibration mode is not to be excited by the first propeller blade excitation order, in the speed range between 80% and 110% of nominal speed.

b) Where bending vibration calculations show a risk of vibration resonance, vibration induced stresses are not to exceed 1,5 times the one indicated in [3.4.3] in the whole speed range. In case the shafting is checked by means of direct calculation the allowable stresses will be established on a case-by-case basis.

   Additionally, vibratory amplitudes in way of aft stern tube bearing should not exceed bearing clearance value.

4.4 Bending vibration measurements

4.4.1 General

The Society may require bending vibration measurements in the following cases:

- where the calculations indicate the possibility of dangerous critical speeds in or near the operating speed range
- where the accuracy of some data is not deemed sufficient
- where restricted speed ranges need to be verified.

Where measurements are required, a comprehensive report including the analysis of the results is to be submitted to the Society.

4.4.2 Method of measurement

When measurements are required, the method of measurement is to be submitted to the Society for approval. The type of measuring equipment and the location of the measurement points are to be specified.

5 Axial vibrations

5.1 General

5.1.1 The provisions of this Article apply to the axial vibrations of propulsion systems fitted with:

- an internal combustion engine having a power exceeding 2000 kW and a running speed of less than 200 RPM, or
- a shaft line where the power transmitted exceeds 375 kW and the L/D ratio exceeds 50

  where:

  L : Total length of the shaft line between the propeller and the thrust bearing

  D : Minimum diameter of the shaft line.

5.2 Documentation to be submitted

5.2.1 Calculations

Axial vibration calculations are to show:

- the equivalent dynamic system used for the modelling of the plant, with indication of the masses and axial stiffnesses for all the components of the system
- the natural frequencies
- the axial vibration amplitude in way of the sterntube sealing gland for the most significant critical speeds
- for engines directly connected to the shaftline, the axial vibration amplitude at the free end of the crankshaft for the most significant critical speeds
- the possible restrictions of operation of the plant.

5.2.2 Particulars to be submitted

The following particulars are to be submitted with the axial vibration calculations:

- detailed drawing of the thrust bearing and its supporting structure with indication of their flexibility
- for the propeller:
  - the thrust
  - the excitations (axial forces)
  - the damping characteristics
- for the engine:
  - the axial excitations
  - the permissible axial amplitude at the free end of the crankshaft
  - the characteristics of the axial vibration damper or detuner.

5.3 Calculation principles

5.3.1 Scope of the calculations

Axial vibration calculations are to take into account:

- the flexibility of the thrust bearing and its supporting structure
- the excitations due to the engine and to the propeller.

Where data having a significant influence on the vibration levels cannot be determined with a sufficient degree of accuracy (e.g. the flexibility of the thrust bearing and its supporting structure), parametric studies are to be carried out.

Where the plant includes an axial vibration damper or detuner, a calculation is to be carried out assuming a malfunction of the damper or detuner.

5.3.2 Criteria for acceptance of the axial vibration levels

The axial vibration force acting on the thrust bearing is not to exceed 30% of the nominal thrust.

The axial vibration amplitude is not to exceed:

- at the free end of the crankshaft, the limit recommended by the engine manufacturer
- in way of the sterntube sealing gland, the limit recommended by the sealing gland manufacturer, if any.

Where the calculations show that in the continuous operation speed range the above limits may be exceeded in the event of malfunction of the axial vibration damper or detuner, a suitable device is to be fitted to indicate the occurrence of such conditions.

Note 1: When detuners or dampers of satisfactorily proven design are used, this requirement may be waived.

5.4 Axial vibration measurements

5.4.1 General

The Society may require axial vibration measurements in the following cases:

- where the calculations indicate the possibility of dangerous critical speeds in the operating speed range
- where the accuracy of some data is not deemed sufficient
- where restricted speed ranges need to be verified.

Where measurements are required, a comprehensive report including the analysis of the results is to be submitted to the Society.

5.4.2 Method of measurement

When measurements are required, the method of measurement is to be submitted to the Society for approval. The type of measuring equipment and the location of the measurement points are to be specified.

Section 10 Piping Systems

1 General

1.1 Application

1.1.1

a) General requirements applying to all piping systems are contained in Articles:
- Article [2] for their design and construction
- Article [3] for the welding of steel pipes
- Article [4] for the bending of pipes
- Article [5] for their arrangement and installation
- Article [20] for their certification, inspection and testing.

b) Specific requirements for ship piping systems and machinery piping systems are given in Articles [6] to [19].

1.2 Documentation to be submitted

1.2.1 Documents

The documents listed in Tab 1 are to be submitted.

1.2.2 Additional information

The information listed in Tab 2 is also to be submitted.

Table 1 : Documents to be submitted

No.	I/A **(1)**	Document **(2)**
1	A	Drawing showing the arrangement of the sea chests and ship side valves
2	A	Diagram of the bilge system (in and outside machinery spaces), including calculation for the bilge main, bilge branch lines and bilge pumps capacity as per Rule requirements
3	A	Specification of the central priming system intended for bilge pumps, when provided
4	A	Diagram of the ballast system (in and outside machinery spaces). See also Ch 1, Sec 13, [1.4] for the installation of ballast water treatment (BWTS) on board
5	A	Diagram of the scuppers and sanitary discharge systems
6	A	Diagram of the air, sounding and overflow systems
7	A	Diagram of cooling systems (sea water and fresh water)
8	A	Diagram of fuel oil system
9	A	Drawings of the fuel oil tanks not forming part of the ship's structure
10	A	Diagram of the lubricating oil system
11	A	Diagram of the thermal oil system
12	A	Diagram of the hydraulic systems intended for essential services or located in machinery spaces
13	A	Diagram of steam system, including safety valve exhaust and drain pipes
14	A I	For high temperature steam pipes: • stress calculation note • drawing showing the actual arrangement of the piping in three dimensions
15	A	Diagram of the boiler feed water and condensate system
16	A	Diagram of the compressed air system, including: • starting air calculation as per Rule requirements • procedure and preliminary calculation showing that after "dead ship conditions" the propulsion may be restored within 30 min
17	A	Diagram of the hydraulic and pneumatic remote control systems

(1) A = to be submitted for approval
I = to be submitted for information.
(2) Diagrams are also to include, where applicable, the (local and remote) control and monitoring systems and automation systems.

No.	I/A (1)	Document (2)
18	A	Diagram of the remote level gauging system
19	A	Diagram of the exhaust gas system
20	A	Diagram of drip trays and gutterway draining system
21	A	Arrangement of the ventilation system
22	A	Diagram of the oxyacetylene welding system
23	A	Drawings and specification of valves and accessories, where required in [2.7]

(1) A = to be submitted for approval
I = to be submitted for information.
(2) Diagrams are also to include, where applicable, the (local and remote) control and monitoring systems and automation systems.

Table 2 : Information to be submitted

No.	I/A (1)	Document
1	I	Nature, service temperature and pressure of the fluids
2	A	Material, external diameter and wall thickness of the pipes
3	A	Type of the connections between pipe lengths, including details of the welding, where provided
4	A	Material, type and size of the accessories
5	A	Capacity, prime mover and, when requested, location of the pumps
6	A	For plastic pipes: • the chemical composition • the physical and mechanical characteristics in function of temperature • the characteristics of inflammability and fire resistance • the resistance to the products intended to be conveyed

(1) A = to be submitted for approval
I = to be submitted for information.

1.3 Definitions

1.3.1 Piping and piping systems

a) Piping includes pipes and their connections, flexible hoses and expansion joints, valves and their actuating systems, other accessories (filters, level gauges, etc.) and pump casings.

b) Piping systems include piping and all the interfacing equipment such as tanks, pressure vessels, heat exchangers, pumps and centrifugal purifiers, but do not include boilers, turbines, internal combustion engines and reduction gears.

Note 1: The equipment other than piping is to be designed in accordance with the relevant Sections of Part C, Chapter 1.

1.3.2 Design pressure

a) The design pressure of a piping system is the pressure considered by the manufacturer to determine the scantling of the system components. It is not to be taken less than the maximum working pressure expected in this system or the highest setting pressure of any safety valve or relief device, whichever is the greater.

b) The design pressure of a boiler feed system is not to be less than 1,25 times the design pressure of the boiler or the maximum pressure expected in the feed piping, whichever is the greater.

c) The design pressure of steam piping located upstream of pressure reducing valves (high pressure side) is not to be less than the setting pressure of the boiler or superheater safety valves.

d) The design pressure of a piping system located on the low pressure side of a pressure reducing valve where no safety valve is provided is not to be less than the maximum pressure on the high pressure side of the pressure reducing valve.

e) The design pressure of a piping system located on the delivery side of a pump or a compressor is not to be less than the setting pressure of the safety valve for displacement pumps or the maximum pressure resulting from the operating (head-capacity) curve for centrifugal pumps, whichever is the greater.

1.3.3 Design temperature

The design temperature of a piping system is the maximum temperature of the medium inside the system.

1.3.4 Flammable oils

Flammable oils include fuel oils, lubricating oils, thermal oils and hydraulic oils.

1.4 Symbols and units

1.4.1 The following symbols and related units are commonly used in this Section. Additional symbols, related to some formulae indicated in this Section, are listed wherever it is necessary.

p : Design pressure, in MPa

T : Design temperature, in °C

t : Rule required minimum thickness, in mm

D : Pipe external diameter, in mm.

1.5 Class of piping systems

1.5.1 Purpose of the classes of piping systems

Piping systems are subdivided into three classes, denoted as class I, class II and class III, for the purpose of acceptance of materials, selection of joints, heat treatment, welding, pressure testing and the certification of fittings.

1.5.2 Definitions of the classes of piping systems

a) Classes I, II and III are defined in Tab 3

b) The following systems are not covered by Tab 3:
- cargo piping for oil tankers, gas tankers and chemical tankers, and
- fluids for refrigerating plants.

Table 3 : Class of piping systems

Media conveyed by the piping system	Class I	Class II **(1)** **(4)**	Class III **(7)**
Toxic media	without special safeguards **(3)**	not applicable	not applicable
Corrosive media	without special safeguards **(3)**	with special safeguards **(3)**	not applicable
Flammable media: • heated above flashpoint, or • having flashpoint < 60°C Liquefied gas	without special safeguards **(3)**	with special safeguards **(3)**	not applicable
Oxyacetylene	irrespective of p	not applicable	not applicable
Steam	p > 1,6 or T > 300	other **(2)**	p ≤ 0,7 and T ≤ 170
Thermal oil	p > 1,6 or T > 300	other **(2)**	p ≤ 0,7 and T ≤ 150
Fuel oil **(8)** Lubricating oil Flammable hydraulic oil **(5)**	p > 1,6 or T > 150	other **(2)**	p ≤ 0,7 and T ≤ 60
Other media **(5)** **(6)**	p > 4 or T > 300	other **(2)**	p ≤ 1,6 and T ≤ 200

(1) Valves under static pressure on oil fuel tanks or lubricating oil tanks belong to class II.

(2) Pressure and temperature conditions other than those required for class I and class III.

(3) Safeguards for reducing leakage possibility and limiting its consequences:
e.g. pipes led in positions where leakage of internal fluids will not cause a potential hazard or damage to surrounding areas which may include the use of pipe ducts, shielding, screening etc.

(4) Valves and fittings fitted on the ship side and collision bulkhead belong to class II. See also [20.5.3] b).

(5) Steering gear hydraulic piping system belongs to class I irrespective of p and T.

(6) Including water, air, gases, non-flammable hydraulic oil, urea for SCR systems, when piping materials selected according to ISO 18611-3:2014 for urea in SCR .

(7) The open ended pipes, irrespective of T, generally belong to class III (as drains, overflows, vents, exhaust gas lines, boiler escape pipes, etc.).

(8) Design pressure for fuel oil systems is to be determined in accordance with Tab 4.

Note 1: p : Design pressure, as defined in [1.3.2], in MPa.

Note 2: T : Design temperature, as defined in [1.3.3], in °C.

Note 3: Flammable media generally include the flammable liquids as oil fuel, lubricating oil, thermal oil and flammable hydraulic oil.

Table 4 : Definition of the design pressure for fuel oil systems

Working pressure P, in bar	Working temperature T, in °C	
	T ≤ 60	T > 60
P ≤ 7	3 bar or max. working pressure, whichever is the greater	3 bar or max. working pressure, whichever is the greater
P > 7	max. working pressure	14 bar or max. working pressure, whichever is the greater

2 General requirements for design and construction

2.1 Materials

2.1.1 General

Materials to be used in piping systems are to be suitable for the medium and the service for which the piping is intended.

For piping systems included in engine, turbine or gearbox installation in contact with flammable fluids, requirements mentioned in Ch 1, Sec 1, [3.7.2] are to be applied when other materials than steel are used.

2.1.2 Use of metallic materials

a) Metallic materials are to be used in accordance with Tab 5.

b) Materials for class I and class II piping systems are to be manufactured and tested in accordance with the appropriate requirements of NR216 Materials and Welding.

c) Materials for class III piping systems are to be manufactured and tested in accordance with the requirements of acceptable national or international standards or specifications.

d) Mechanical characteristics required for metallic materials are specified in NR216 Materials and Welding.

2.1.3 Use of plastics

a) Plastics may be used for piping systems belonging to class III in accordance with Ch 1, App 3. The use of plastics for other systems or in other conditions will be given special consideration.

b) Plastics intended for piping systems dealt with in this Section are to be of a type approved by the Society.

2.2 Thickness of pressure piping

2.2.1 Calculation of the thickness of pressure pipes

a) The thickness t, in mm, of pressure pipes is to be determined by the following formula but, in any case, is not to be less than the minimum thickness given in Tab 6 to Tab 9.

$$t = \frac{t_0 + b + c}{1 - \frac{a}{100}}$$

where:

t_0 : Coefficient, in mm, equal to:

$$t_0 = \frac{p \cdot D}{2Ke + p}$$

with:

p and D : as defined in [1.4.1],

K : Permissible stress defined in [2.2.2]

e : Weld efficiency factor to be:

- equal to 1 for seamless pipes and pipes fabricated according to a welding procedure approved by the Society,
- specially considered by the Society for other welded pipes, depending on the service and the manufacture procedure.

b : Thickness reduction due to bending defined in [2.2.3], in mm

c : Corrosion allowance defined in [2.2.4], in mm

a : Negative manufacturing tolerance percentage:

- equal to 10 for copper and copper alloy pipes, cold drawn seamless steel pipes and steel pipes fabricated according to a welding procedure approved by the Society
- equal to 12,5 for hot laminated seamless steel pipes
- subject to special consideration by the Society in other cases.

b) The thickness thus determined does not take into account the particular loads to which pipes may be subjected. Attention is to be drawn in particular to the case of high temperature and low temperature pipes.

Table 5 : Conditions of use of metallic materials in piping systems

Material	Allowable classes	Maximum design temperature **(1)**	Particular conditions of use
Carbon and carbon-manganese steels	III, II, I	400 **(2)**	Class I and II pipes are to be seamless drawn pipes **(3)**
Copper and aluminium brass	III, II, I	200	• Not to be used in fuel oil systems, except for class III pipes of a diameter not exceeding 25 mm not passing through fuel oil tanks • Not to be used for boiler blow-down valves nor for associated pieces for connection to the shell plating **(4)**
Copper-nickel	III, II, I	300	
Special high temperature resistant bronze	III, II, I	260	
Stainless steel	III, II, I	300	In general, austenitic stainless steel is not to be used for sea water systems (see Note **(6)**)
Spheroidal graphite cast iron/Nodular cast iron	III, II **(5)**	350	• Minimum elongation is not to be less than 12% on a gauge length of $5,65.S^{0,5}$, where S is the actual cross-sectional area of the test piece • Not to be used for boiler blow-down valves nor for associated pieces for connection to the shell plating
Grey cast iron/ Ordinary cast iron	III, II	220	Grey cast iron/ordinary cast iron is not to be used for the following systems: • boiler blow-down systems and other piping systems subject to shocks, high stresses and vibrations • bilge lines in tanks • parts of scuppers and sanitary discharge systems located next to the hull below the freeboard deck or for passengers ships below the bulkhead deck • ship side valves and fittings • valves fitted on the collision bulkhead • valves fitted to fuel oil and lubricating oil tanks under static pressure head • class II fuel oil systems and thermal oil systems
Aluminium and aluminium alloys	III, II	200	Aluminium and aluminium alloys are not to be used on the following systems: • flammable oil systems • sounding and air pipes of fuel oil tanks • fire-extinguishing systems • bilge system in boiler or machinery spaces or in spaces containing fuel oil tanks or pumping units • scuppers and overboard discharges except for pipes led to the bottoms or to the shell above the freeboard deck or fitted at their upper end with closing means operated from a position above the freeboard deck • boiler blow-down valves and pieces for connection to the shell plating

(1) Maximum design temperature is not to exceed that assigned to the class of piping.

(2) Higher temperatures may be accepted if metallurgical behaviour and time dependent strength (ultimate tensile strength after 100 000 hours) are in accordance with national or international standards or specifications and if such values are guaranteed by the steel manufacturer.

(3) Pipes fabricated by a welding procedure approved by the Society may also be used.

(4) Pipes made of copper and copper alloys are to be seamless.

(5) Use of spheroidal cast iron / nodular cast iron for class I piping systems will be given special consideration by the Society.

(6) Austenitic stainless steels including grades 304, 304L, 316 and 316L are not considered suitable for use in seawater piping systems. Other types of stainless steel with higher contents of chromium, molybdenum and nitrogen may be considered if a technical justification considering critical factors (e.g. chemical composition, stagnant sea water, or low flow sea water piping, operational consideration, etc.) is provided. This includes austenitic stainless steels with at least 3% molybdenum and duplex ferritic-austenitic stainless steels such as grades UNS S31803 or UNS S2550.

Table 6 : Minimum wall thickness for steel pipes

External diameter (mm)	Minimum nominal wall thickness (mm)			Minimum reinforced wall thickness (mm) **(2)**	Minimum extra-reinforced wall thickness (mm) **(3)**
	Pipes in general **(1)**	Vent, overflow and sounding pipes for integral tanks **(1) (5)**	Sea water pipes, bilge and ballast systems **(1) (4)**		
10,2 - 12,0	1,6	–	–	–	–
13,5 - 19,3	1,8	–	–	–	–
20,0	2,0	–	–	–	–
21,3 - 25,0	2,0	–	3,2	–	–
26,9 - 33,7	2,0	–	3,2	–	–
38,0 - 44,5	2,0	4,5	3,6	6,3	7,6
48,3	2,3	4,5	3,6	6,3	7,6
51,0 - 63,5	2,3	4,5	4,0	6,3	7,6
70,0	2,6	4,5	4,0	6,3	7,6
76,1 - 82,5	2,6	4,5	4,5	6,3	7,6
88,9 - 108,0	2,9	4,5	4,5	7,1	7,8
114,3 - 127,0	3,2	4,5	4,5	8,0	8,8
133,0 - 139,7	3,6	4,5	4,5	8,0	9,5
152,4 - 168,3	4,0	4,5	4,5	8,8	11,0
177,8	4,5	5,0	5,0	8,8	12,7
193,7	4,5	5,4	5,4	8,8	12,7
219,1	4,5	5,9	5,9	8,8	12,7
244,5 - 273,0	5,0	6,3	6,3	8,8	12,7
298,5 - 368,0	5,6	6,3	6,3	8,8	12,7
406,4 - 457,2	6,3	6,3	6,3	8,8	12,7

(1) Attention is drawn to the special requirements regarding:
- bilge and ballast systems
- scupper and discharge pipes
- sounding, air and overflow pipes
- ventilation systems
- oxyacetylene welding systems
- CO_2 fire-extinguishing systems (see Ch 4, Sec 15)
- cargo lines (see Pt D, Ch 10, Sec 3). The wall thickness is to be subject to special consideration by the Society.

(2) Reinforced wall thickness applies to pipes passing through tanks containing a fluid distinct from that conveyed by the pipe and to pipe connections fitted to the tanks.

(3) Extra-reinforced wall thickness applies to pipes connected to the shell below the freeboard deck, excluding scupper and discharge pipes.

(4) The minimum wall thickness for bilge lines and ballast lines through deep tanks is to be subject to special consideration by the Society. The ballast lines within oil cargo tanks (where permitted) is to be subject to special consideration by the Society (see Pt D, Ch 7, Sec 4, [2.1.3]).

(5) For sounding pipes, except those for flammable cargoes, the minimum wall thickness is intended to apply only to the part outside the tank.

Note 1: A different thickness may be considered by the Society on a case by case basis, provided that it complies with recognised standards.

Note 2: For pipes efficiently protected against corrosion, the thickness may be reduced by an amount up to 1 mm.

Note 3: The thickness of threaded pipes is to be measured at the bottom of the thread.

Note 4: The minimum thickness listed in this table is the nominal wall thickness and no allowance is required for negative tolerance and reduction in thickness due to bending.

Note 5: For nominal diameters ND > 450 mm, the minimum wall thickness is to be in accordance with a national or an international standard, but is not to be less than the minimum wall thickness of the appropriate column indicated for 450 mm pipe size.

Note 6: Exhaust gas pipe minimum wall thickness is to be subject to special consideration by the Society.

Table 7 : Minimum wall thickness for copper and copper alloy pipes

External diameter (mm)	Minimum wall thickness (mm)	
	Copper	Copper alloy
8 - 10	1,0	0,8
12 - 20	1,2	1,0
25 - 44,5	1,5	1,2
50 - 76,1	2,0	1,5
88,9 - 108	2,5	2,0
133 - 159	3,0	2,5
193,7 - 267	3,5	3,0
273 - 457,2	4,0	3,5
470	4,0	3,5
508	4,5	4,0
Note 1: A different thickness may be considered by the Society on a case by case basis, provided that it complies with recognised standards.		

Table 8 : Minimum wall thickness for austenitic stainless steel pipes

External diameter (mm)	Minimum wall thickness (mm)
10,2 to 17,2	1,0
21,3 to 48,3	1,6
60,3 to 88,9	2,0
114,3 to 168,3	2,3
219,1	2,6
273,0	2,9
323,9 to 406,4	3,6
over 406,4	4,0
Note 1: Diameters and thicknesses according to national or international standards may be accepted.	

Table 9 : Minimum wall thickness for aluminium and aluminium alloy pipes

External diameter (mm)	Minimum wall thickness (mm)
0 - 10	1,5
12 - 38	2,0
43 - 57	2,5
76 - 89	3,0
108 - 133	4,0
159 - 194	4,5
219 - 273	5,0
above 273	5,5
Note 1: A different thickness may be considered by the Society on a case by case basis, provided that it complies with recognised standards. **Note 2:** For sea water pipes, the minimum thickness is not to be less than 5 mm.	

2.2.2 Permissible stress

a) The permissible stress K is given:
- in Tab 10 for carbon and carbon-manganese steel pipes
- in Tab 11 for alloy steel pipes, and
- in Tab 12 for copper and copper alloy pipes,

as a function of the temperature. Intermediate values may be obtained by interpolation.

b) Where, for carbon steel and alloy steel pipes, the value of the permissible stress K is not given in Tab 10 or Tab 11, it is to be taken equal to the lowest of the following values:

$$\frac{R_{m,20}}{2,7} \qquad \frac{R_e}{A} \qquad \frac{S_R}{A} \qquad S$$

where:

$R_{m,20}$: Minimum tensile strength of the material at ambient temperature (20°C), in N/mm²

R_e : Minimum yield strength or 0,2% proof stress at the design temperature, in N/mm²

S_R : Average stress to produce rupture in 100000 h at design temperature, in N/mm²

S : Average stress to produce 1% creep in 100000 h at design temperature, in N/mm²

A : Safety factor to be taken equal to:
- 1,6 when R_e and S_R values result from tests attended by the Society
- 1,8 otherwise.

c) The permissible stress values adopted for materials other than carbon steel, alloy steel, copper and copper alloy will be specially considered by the Society.

Table 10 : Permissible stresses for carbon and carbon-manganese steel pipes

Specified minimum tensile strength (N/mm²)	Design temperature (°C)												
	≤50	100	150	200	250	300	350	400	410	420	430	440	450
320	107	105	99	92	78	62	57	55	55	54	54	54	49
360	120	117	110	103	91	76	69	68	68	68	64	56	49
410	136	131	124	117	106	93	86	84	79	71	64	56	49
460	151	146	139	132	122	111	101	99	98	85	73	62	53
490	160	156	148	141	131	121	111	109	98	85	73	62	53

Table 11 : Permissible stresses for alloy steel pipes

Type of steel	Specified minimum tensile strength (N/mm²)	Design temperature (°C)									
		≤50	100	200	300	350	400	440	450	460	470
1Cr1/2Mo	440	159	150	137	114	106	102	101	101	100	99
2 1/4Cr1Mo annealed	410	76	67	57	50	47	45	44	43	43	44
2 1/4Cr1Mo normalised and tempered below 750°C	490	167	163	153	144	140	136	130	128	127	116
2 1/4Cr1Mo normalised and tempered above 750°C	490	167	163	153	144	140	136	130	122	114	105
1/2Cr 1/2Mo 1/4V	460	166	162	147	120	115	111	106	105	103	102
Type of steel	Specified minimum tensile strength (N/mm²)	Design temperature (°C)									
		480	490	500	510	520	530	540	550	560	570
1Cr1/2Mo	440	98	97	91	76	62	51	42	34	27	22
2 1/4Cr1Mo annealed	410	42	42	41	41	41	40	40	40	37	32
2 1/4Cr1Mo normalised and tempered below 750°C	490	106	96	86	79	67	58	49	43	37	32
2 1/4Cr1Mo normalised and tempered above 750°C	490	96	88	79	72	64	56	49	43	37	32
1/2Cr 1/2Mo 1/4V	460	101	99	97	94	82	72	62	53	45	37

Table 12 : Permissible stresses for copper and copper alloy pipes

Material (annealed)	Specified minimum tensile strength (N/mm²)	Design temperature (°C)										
		≤50	75	100	125	150	175	200	225	250	275	300
Copper	215	41	41	40	40	34	27,5	18,5				
Aluminium brass	325	78	78	78	78	78	51	24,5				
Copper-nickel 95/5 and 90/10	275	68	68	67	65,5	64	62	59	56	52	48	44
Copper-nickel 70/30	365	81	79	77	75	73	71	69	67	65,5	64	62

2.2.3 Thickness reduction due to bending

a) Unless otherwise justified, the thickness reduction b due to bending is to be determined by the following formula:

$$b = \frac{Dt_0}{2{,}5\rho}$$

where:

ρ : Bending radius measured on the centre line of the pipe, in mm

D : as defined in [1.4.1]

t_0 : as defined in [2.2.1].

b) When the bending radius is not given, the thickness reduction is to be taken equal to:

$$\frac{t_0}{10}$$

c) For straight pipes, the thickness reduction is to be taken equal to 0.

2.2.4 Corrosion allowance

The values of corrosion allowance c are given for steel pipes in Tab 13 and for non-ferrous metallic pipes in Tab 14.

Table 13 : Corrosion allowance for steel pipes

Piping system	Corrosion allowance (mm)
Superheated steam	0,3
Saturated steam	0,8
Steam coils in cargo tanks and liquid fuel tanks	2,0
Feed water for boilers in open circuit systems	1,5
Feed water for boilers in closed circuit systems	0,5
Blow-down systems for boilers	1,5
Compressed air	1,0
Hydraulic oil	0,3
Lubricating oil	0,3
Fuel oil	1,0
Thermal oil	1,0
Fresh water	0,8
Sea water	3,0
Refrigerants referred to in Ch 1, Sec 16	0,3
Cargo systems for oil tankers	2,0
Cargo systems for ships carrying liquefied gases	0,3
Note 1: For pipes passing through tanks, an additional corrosion allowance is to be considered in order to account for the external corrosion. **Note 2:** The corrosion allowance of pipes efficiently protected against corrosion may be reduced by no more than 50%. **Note 3:** When the corrosion resistance of alloy steels is adequately demonstrated, the corrosion allowance may be disregarded.	

Table 14 : Corrosion allowance for non-ferrous metal pipes

Piping material **(1)**	Corrosion allowance (mm) **(2)**
Copper	0,8
Brass	0,8
Copper-tin alloys	0,8
Copper-nickel alloys with less than 10% of Ni	0,8
Copper-nickel alloys with at least 10% of Ni	0,5
Aluminium and aluminium alloys	0,5

(1) The corrosion allowance for other materials will be specially considered by the Society. Where their resistance to corrosion is adequately demonstrated, the corrosion allowance may be disregarded.
(2) In cases of media with high corrosive action, a higher corrosion allowance may be required by the Society.

2.2.5 Tees

As well as complying with the provisions of [2.2.1] to [2.2.4], the thickness t_T of pipes on which a branch is welded to form a Tee is not to be less than that given by the following formula:

$$t_T = \left(1 + \frac{D_1}{D}\right) \cdot t_0$$

where:

D_1 : External diameter of the branch pipe

D : As defined in [1.4.1]

t_0 : As defined in [2.2.1].

Note 1: This requirement may be dispensed with for Tees provided with a reinforcement or extruded.

2.3 Calculation of high temperature pipes

2.3.1 General

For main steam piping having a design temperature exceeding 400°C, calculations are to be submitted to the Society concerning the stresses due to internal pressure, piping weight and any other external load, and to thermal expansion, for all cases of actual operation and for all lengths of piping.

The calculations are to include, in particular:

- the components, along the three principal axes, of the forces and moments acting on each branch of piping
- the components of the displacements and rotations causing the above forces and moments
- all parameters necessary for the computation of forces, moments and stresses.

In way of bends, the calculations are to be carried out taking into account, where necessary, the pipe ovalisation and its effects on flexibility and stress increase.

A certain amount of cold springing, calculated on the basis of expected thermal expansion, is to be applied to the piping during installation. Such springing is to be neglected in stress calculations; it may, however, be taken into account in terms of its effect on thrusts on turbines and other parts.

2.3.2 Thermal stress

The combined stress σ_{ID}, in N/mm², due to thermal expansion, calculated by the following formula:

$$\sigma_{ID} = (\sigma^2 + 4\,\tau^2)^{0,5}$$

is to be such as to satisfy the following equation:

$$\sigma_{ID} \leq 0,75\,K_{20} + 0,25\,K_T$$

where:

σ : Value of the longitudinal stress due to bending moments caused by thermal expansion, increased, if necessary, by adequate factors for bends, in N/mm²; in general it is not necessary to take account of the effect of axial force

τ : Value of the tangential stress due to torque caused by thermal expansion, in N/mm²; in general it is not necessary to take account of the effect of shear force

K_{20} : Value of the permissible stress for the material employed, calculated according to [2.2.2], for a temperature of 20°C, in N/mm²

K_T : Value of the permissible stress for the material employed, calculated according to [2.2.2], for the design temperature T, in N/mm².

2.3.3 Longitudinal stresses

The sum of longitudinal stresses σ_L , in N/mm^2, due to pressure, piping weight and any other external loads is to be such as to satisfy the following equation:

$\sigma_L \leq K_T$

where K_T is defined in [2.3.2].

2.3.4 Alternative limits for permissible stresses

Alternative limits for permissible stresses may be considered by the Society in special cases or when calculations have been carried out following a procedure based on hypotheses other than those considered above.

2.4 Junction of pipes

2.4.1 General

a) The junctions between metallic pipe lengths or between metallic pipe lengths and fittings are to be made by:
   - direct welding (butt-weld, socket-weld)
   - bolted flanges (welded-on or screwed-on)
   - threaded sleeve joints, or
   - mechanical joints (see [2.4.5]).

   The joints are to comply with a recognised standard or to be of a design proven to be suitable for the intended purpose and acceptable to the Society. See also [2.1.2].

   The expression “mechanical joints” means devices intended for direct connection of pipe lengths other than by welding, flanges or threaded joints described in [2.4.2], [2.4.3], [2.4.4].

b) The number of joints in flammable oil piping systems is to be kept to the minimum necessary for mounting and dismantling purposes.

c) The gaskets and packings used for the joints are to suit the design pressure, the design temperature and the nature of the fluids conveyed.

d) The junction between plastic pipes is to comply with Ch 1, App 3.

2.4.2 Welded metallic joints

a) Welded joints are to be used in accordance with Tab 15. Welding and non destructive testing of welds are to be carried out in accordance with Article [3].

b) Butt-welded joints are to be of full penetration type, with or without special provision for a high quality of root side.

   The expression "special provision for a high quality of root side" means that butt welds were accomplished as double welded or by use of a backing ring or inert gas back-up on first pass, or other similar methods accepted by the Society.

c) Slip-on sleeve and socket welded joints are to have sleeves, sockets and weldments of adequate dimensions in compliance with a standard recognised by the Society.

Table 15 : Use of welded and threaded metallic joints in piping systems

Joints	Permitted classes of piping	Restrictions of use
Butt-welded, with special provision for a high quality of root side **(1)**	III, II, I	no restrictions
Butt-welded, without special provision for a high quality of root side **(1)**	III, II	no restrictions
Slip-on sleeve and socket welded **(2)**	III	no restrictions
Threaded sleeve joints with tapered thread **(3)**	I	not allowed for: • pipes with outside diameter of more than 33,7 mm • pipes inside tanks • piping systems conveying toxic or flammable media or services where fatigue, severe erosion or crevice corrosion is expected to occur **(4)**.
	III, II	not allowed for: • pipes with outside diameter of more than 60,3 mm • pipes inside tanks • piping systems conveying toxic or flammable media or services where fatigue, severe erosion or crevice corrosion is expected to occur **(4)**.

Joints	Permitted classes of piping	Restrictions of use
Threaded sleeve joints with parallel thread and tightening suitable for intended design conditions **(3)**	III	not allowed for: • pipes with outside diameter of more than 60,3 mm • pipes inside tanks • piping systems conveying toxic or flammable media or services where fatigue, severe erosion or crevice corrosion is expected to occur **(4)**.

(1) For expression "special provision for a high quality of root side" see [2.4.2] b).
(2) Particular cases may be allowed by the Society for piping systems of Class I and II having outside diameter ≤ 88,9 mm except for piping systems conveying toxic media or services where fatigue, severe erosion or crevice corrosion is expected to occur.
(3) In particular cases, sizes in excess of those mentioned above may be accepted by the Society if found in compliance with a recognised national and/or international standard.
(4) Threaded sleeve joints may be accepted for connecting instrumentation lines equipment (e.g., pressure/temperature sensors) to piping conveying flammable media if such connections comply with a recognized national and/or international standard, such as ASME B31.1 and ASME B31.3. The use of threaded sleeve joints is limited to external diameters up to 25 mm.
Note 1: Other applications will be specially considered by the Society.

2.4.3 Metallic flange connections

a) In general, the metallic flange connections used for piping systems are to be in compliance with a standard recognised by the Society.

b) The material used for flanges and gaskets is to be suitable for the nature and temperature of the fluid, as well as pipes on which the flanges are to be fitted.

c) The dimensions and configuration of flanges and bolts are to be chosen in accordance with recognised standard intended for design pressure and design temperature of the piping system. Otherwise, the flange connections are subject to special consideration.

d) Flanges are to be attached to the pipes by welding or screwing. Examples of acceptable metallic flange connections are shown in Fig 1. However, other types of flange connections may be also considered by the Society in each particular case, provided that they are in accordance with national or international standards applicable to the piping system and recognise the boundary fluids, design pressure and temperature conditions, external or cyclic loading and location.

e) Permitted applications are indicated in Tab 16.

Table 16 : Use of metallic flange connections in piping systems (types as shown in Fig 1)

Type of media conveyed	Class of piping (see Tab 3)		
	I	II	III
Toxic or corrosive media Flammable liquids (where heated above flashpoint or having flashpoint < 60°C) Liquefied gases	A1, A2, B1, B2, B3 **(1) (2) (4)**	A1, A2, B1, B2, B3, C1, C2, C3 **(1) (4)**	not applicable
Fuel oil Lubricating oil	A1, A2, B1, B2, B3	A1, A2, B1, B2, B3, C1, C2, C3	A1, A2, B1, B2, B3, C1, C2, C3, E2
Steam Thermal oil	A1, A2, B1, B2, B3 **(2) (3)**	A1, A2, B1, B2, B3, C1, C2, C3, D, E2 **(6)**	A1, A2, B1, B2, B3, C1, C2, C3, D, E2
Other media as water, air, gases (refrigerants), non-flammable hydraulic oil, etc.	A1, A2, B1, B2, B3 **(3)**	A1, A2, B1, B2, B3, C1, C2, C3, D, E2 **(6)**	A1, A2, B1, B2, B3, C1, C2, C3, D, E1, E2 **(5) (6) (7)**

(1) When design pressure p (see [1.3.2]) exceeds 1 MPa, types A1 and A2 only.
(2) For nominal diameter ND ≥ 150 mm, types A1 and A2 only.
(3) When design temperature T (see [1.3.3] exceeds 400°C, types A1 and A2 only.
(4) For cargo piping of ships having the service notation **chemical tanker**, IBC Code Ch. 5, 5.3 and Pt D, Ch 8, Sec 5, [3.1.4] are to be applied. For cargo piping of ships having the service notation **liquefied gas carrier**, Pt D, Ch 9, Sec 5, [8.3] is to be applied.
(5) Type E2: only for design pressure p ≤ 1,6 MPa and design temperature T ≤ 150°C.
(6) Types D and E2: only for design temperature T ≤ 250°C.
(7) Type E1: only for water pipelines and for open ended lines (e.g. drain, overflow, air vent piping, etc.).

Figure 1 : Examples of metallic flange connections

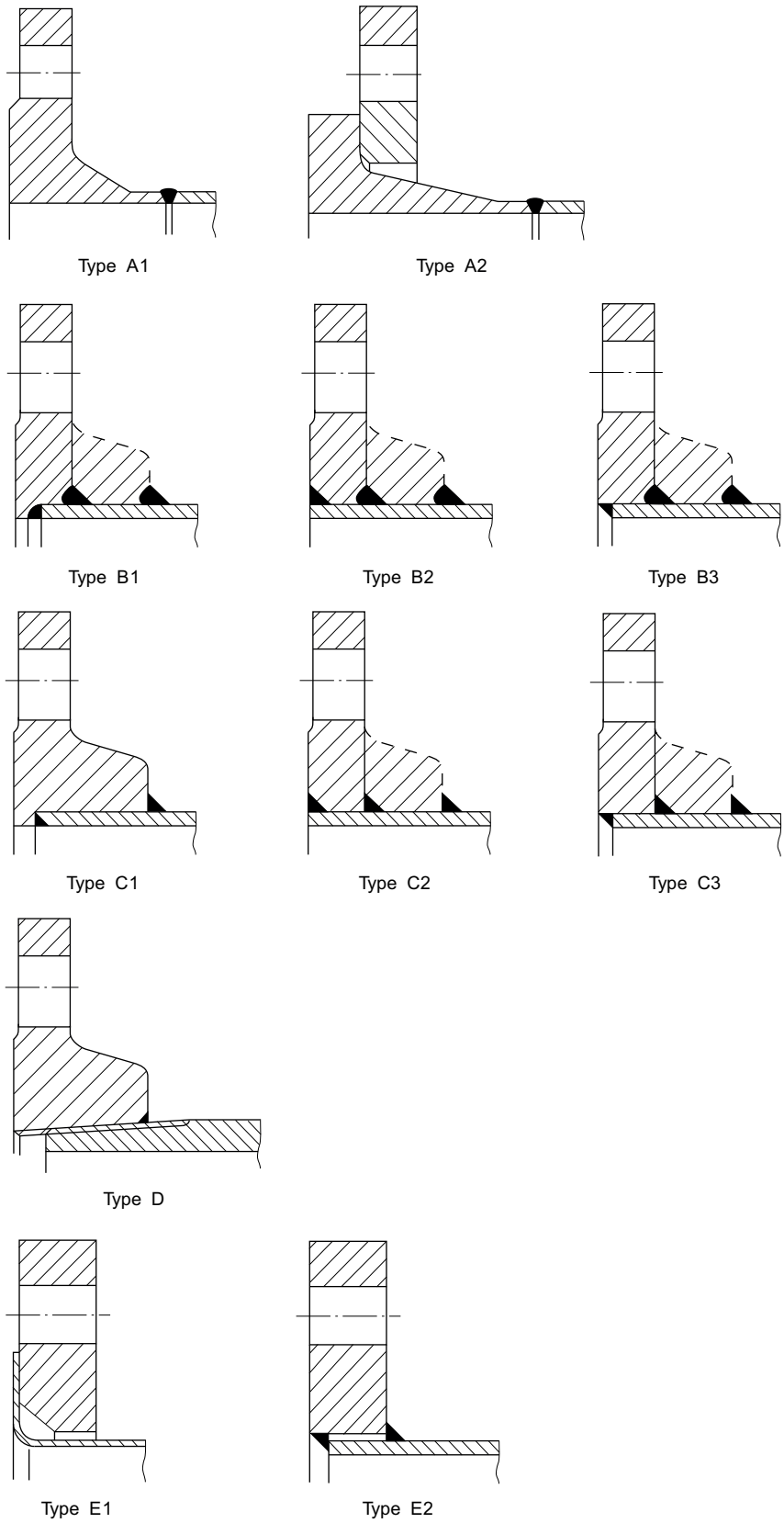

Note 1: For type D, the pipe and flange are to be screwed with a tapered thread and the diameter of the screw portion of the pipe over the thread is not to be appreciably less than the outside diameter of the unthreaded pipe. For certain types of thread, after the flange has been screwed hard home, the pipe is to be expanded into the flange.

Note 2: The leg length of the fillet weld, as well as the dimension of the groove penetration in the flange, is to be in general equal to 1,5 times the pipe thickness but not less than 5 mm.

2.4.4 Slip-on threaded joints

a) Slip-on threaded joints having pipe threads where pressure-tight joints are made on the threads with parallel or tapered threads are to comply with requirements of a recognised national and / or international standard and are to be acceptable to the Society.

b) Slip-on threaded joints may be used for piping systems in accordance with Tab 15.

c) Threaded joints may be accepted also in CO_2 piping systems, provided that they are used only inside protected spaces and in CO_2 cylinder rooms.

2.4.5 Mechanical joints

Due to the great variations in design and configuration of mechanical joints, specific recommendation regarding calculation method for theoretical strength calculations is not specified. The Type Approval is to be based on the results of testing of the actual joints.

Below specified requirements are applicable to pipe unions, compression couplings, slip-on joints as shown in Fig 2. Similar joints complying with these requirements may be acceptable.

a) The application and pressure ratings of different mechanical joints are to be approved by the Society. The approval is to be based on the Type Approval procedure provided in Ch 1, App 5. Mechanical joints including pipe unions, compression couplings, slip-on joints and similar joints are to be of approved type for the service conditions and the intended application.

b) Where the application of mechanical joints results in reduction in pipe wall thickness due to the use of bite type rings or other structural elements, this is to be taken into account in determining the minimum wall thickness of the pipe to withstand the design pressure.

c) Material of mechanical joints is to be compatible with the piping material and internal and external media.

d) As far as applicable, the mechanical joints are to be tested to a burst pressure of 4 times the design pressure. For design pressures above 200 bar the required burst pressure is to be specially considered by the Society.

e) Where appropriate, mechanical joints are to be of fire resistant type as required by Tab 17.

f) Mechanical joints, which in the event of damage could cause fire or flooding, are not to be used in piping sections directly connected to the ship's side below the bulkhead deck of passenger ships and freeboard deck of cargo ships or tanks containing flammable fluids.

g) The number of mechanical joints in flammable liquid systems is to be kept to a minimum. In general, flanged joints conforming to recognised standards are to be used.

h) Piping in which a mechanical joint is fitted is to be adequately adjusted, aligned and supported. Supports or hangers are not to be used to force alignment of piping at the point of connection.

i) Slip-on joints are not to be used in pipelines in cargo holds, tanks and other spaces which are not easily accessible (refer to IMO MSC/Circ.734), except that these joints may be permitted in tanks that contain the same media as the pipe where the joint is fitted. Usage of slip type slip-on joints as the main means of pipe connection is not permitted except for cases where compensation of axial pipe deformation is necessary.

j) Application of mechanical joints and their acceptable use for each service is indicated in Tab 17; dependence upon the class of piping, pipe dimensions, working pressure and temperature is indicated in Tab 18.

k) In some particular cases, sizes in excess of those mentioned above may be accepted by the Society if they are in compliance with a recognised national and/or international standard.

l) Application of various mechanical joints may be accepted as indicated by Tab 17. However, in all cases, acceptance of the joint type is to be subject to approval for the intended application, and subject to conditions of the approval and applicable Rules.

m) Mechanical joints are to be tested in accordance with a program approved by the Society, which is to include at least the following:

   1) leakage test
   2) vacuum test (where necessary)
   3) vibration (fatigue) test
   4) fire endurance test (where necessary)
   5) burst pressure test
   6) pressure pulsation test (mandatory for piping systems classes I and II, where necessary for piping system class III)
   7) assembly test (where necessary)
   8) pull out test (where necessary).

n) The installation of mechanical joints is to be in accordance with the manufacturer's assembly instructions. Where special tools and gauges are required for installation of the joints, these are to be supplied by the manufacturer.

Figure 2 : Examples of mechanical joints

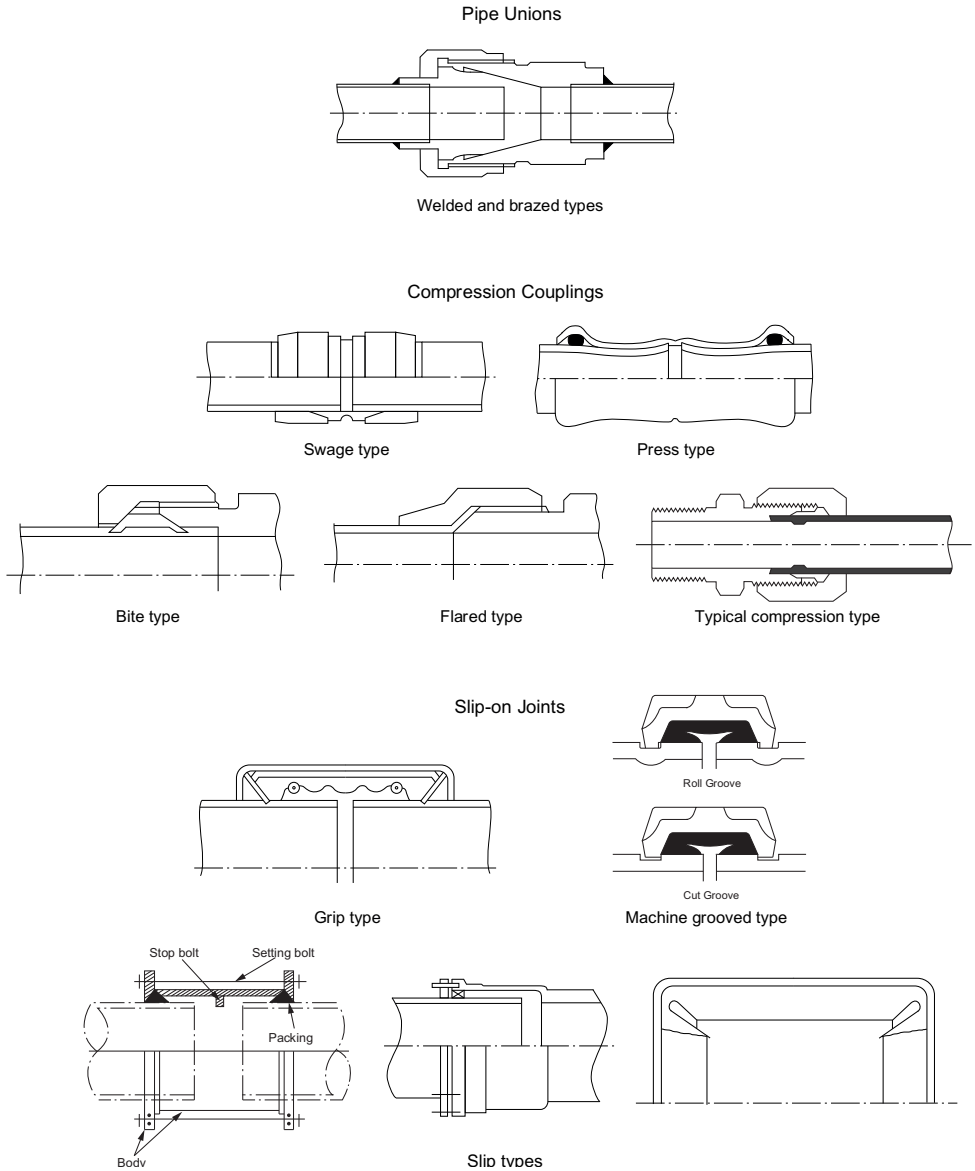

Table 17 : Application of mechanical joints

Systems		Kind of connections			Classification of pipe system	Fire endurance test condition **(7)**
		Pipe unions	Compression couplings	Slip-on joints		
FLAMMABLE FLUIDS (FLASHPOINT ≤ 60°C)						
1	Cargo oil lines **(1)**	+	+	+	dry	30 min dry (*)
2	Crude oil washing lines **(1)**	+	+	+	dry	30 min dry (*)
3	Vent lines **(3)**	+	+	+	dry	30 min dry (*)
INERT GAS						
4	Water seal effluent lines	+	+	+	wet	30 min wet (*)
5	Scrubber effluent lines	+	+	+	wet	30 min wet (*)
6	Main lines **(1)** **(2)**	+	+	+	dry	30 min dry (*)
7	Distribution lines **(1)**	+	+	+	dry	30 min dry (*)
FLAMMABLE FLUIDS (FLASHPOINT > 60°C)						
8	Cargo oil lines **(1)**	+	+	+	dry	30 min dry (*)
9	Fuel oil lines **(2)** **(3)**	+	+	+	wet	30 min wet (*)
10	Lubricating oil lines **(2)** **(3)**	+	+	+	wet	30 min wet (*)
11	Hydraulic oil **(2)** **(3)**	+	+	+	wet	30 min wet (*)
12	Thermal oil **(2)** **(3)**	+	+	+	wet	30 min wet (*)

Systems		Kind of connections			Classification of pipe system	Fire endurance test condition **(7)**
		Pipe unions	Compression couplings	Slip-on joints		
SEA WATER						
13	Bilge lines **(4)**	+	+	+	dry / wet	8 min dry + 22 min wet (*)
14	Permanent water filled fire extinguishing systems, e.g. fire main, sprinkler systems **(3)**	+	+	+	wet	30 min wet (*)
15	Non-permanent water filled fire extinguishing systems, e.g. foam, drencher systems and fire main **(3)**	+	+	+	dry / wet	8 min dry + 22 min wet (*) For foam systems, Ch 4, Sec 15, [5] to be observed
16	Ballast system **(4)**	+	+	+	wet	30 min wet (*)
17	Cooling water system **(4)**	+	+	+	wet	30 min wet (*)
18	Tank cleaning services	+	+	+	dry	Fire endurance test not required
19	Non-essential systems	+	+	+	dry dry / wet wet	Fire endurance test not required
FRESH WATER						
20	Cooling water system **(4)**	+	+	+	wet	30 min wet (*)
21	Condensate return **(4)**	+	+	+	wet	30 min wet (*)
22	Non-essential systems	+	+	+	dry dry / wet wet	Fire endurance test not required
SANITARY / DRAINS / SCUPPERS						
23	Deck drains (internal) **(5)**	+	+	+	dry	Fire endurance test not required
24	Sanitary drains	+	+	+	dry	
25	Scuppers and discharge (overboard)	+	+	–	dry	
SOUNDING / VENT						
26	Water tanks / Dry spaces	+	+	+	dry / wet	Fire endurance test not required
27	Oil tanks (flashpoint > 60°C) **(2) (3)**	+	+	+	dry	
MISCELLANEOUS						
28	Starting/Control air **(4)**	+	+	–	dry	30 min dry (*)
29	Service air (non-essential)	+	+	+	dry	Fire endurance test not required
30	Brine	+	+	+	wet	
31	CO_2 system (outside protected space)	+	+	–	dry	30 min dry (*)
32	CO_2 system (inside protected space)	+	+	–	dry	Mechanical joints are to be constructed of materials with melting point above 925°C Refer to Ch 4, Sec 15, [4]
33	Steam	+	+	+ **(6)**	wet	Fire endurance test not required

Note 1: + : Application is allowed ; – : Application is not allowed.
(*) Fire test as specified in Ch 1, App 5, [2.7.6].

Footnotes - Fire resistance capability

If mechanical joints include any components which readily deteriorate in case of fire, the following footnotes are to be observed:

(1) Fire endurance test is to be applied when mechanical joints are installed in pump rooms and open decks.

(2) Slip on joints are not accepted inside machinery spaces of category A or accommodation spaces. May be accepted in other machinery spaces provided the joints are located in easily visible and accessible positions (refer to IMO Circular MSC/Circ.734).

(3) Approved fire-resistant types except in cases where such mechanical joints are installed on open decks, as defined in Ch 4, Sec 5, [1.4.3] item b) 2) (10), and not used for fuel oil lines.

(4) Fire endurance test is to be applied when mechanical joints are installed inside machinery spaces of category A.

Footnotes - General

(5) Only above bulkhead deck of passenger ships and freeboard deck of cargo ships.

(6) Slip type slip-on joints as shown in Fig 2. May be used for pipes on deck with a design pressure of 10 bar or less.

(7) In cases exposure time (t_T) is greater than 30 minutes the dry-wet test conditions are 8 minutes dry and, accordingly, the wet period t_T – 8 min

If a connection has passed the "30 min dry" test, it is considered suitable also for applications for which the "8 min dry+22 min wet" and/or "30 min wet " tests are required. If a connection has passed the "8 min dry+22 min wet" test, it is considered suitable also for applications for which the "30 min wet" test is required.

Table 18 : Application of mechanical joints depending upon the class of piping

Types of joints	Classes of piping systems		
	Class I	Class II	Class III
Pipe Unions			
Welded and brazed types	+ (OD ≤ 60,3 mm)	+ (OD ≤ 60,3 mm)	+
Compression Couplings			
Swage type	+	+	+
Bite type	+	+	+
Typical compression type	+	+	+
Flared type	+	+	+
Press type	–	–	+
Slip-on Joints			
Machine grooved type	+	+	+
Grip type	–	+	+
Slip type	–	+	+
Note 1:+ : Application is allowed ; – : Application is not allowed.			

2.5 Protection against overpressure

2.5.1 General

a) These requirements deal with the protection of piping systems against overpressure, with the exception of heat exchangers and pressure vessels, which are dealt with in Ch 1, Sec 3, [3.5.1].

b) Safety valves are to be sealed after setting.

2.5.2 Protection of flammable oil systems

Provisions shall be made to prevent overpressure in any flammable oil tank or in any part of the flammable oil systems, including the filling lines served by pumps on board.

2.5.3 Protection of pump and compressor discharges

a) Provisions are to be made so that the discharge pressure of pumps and compressors cannot exceed the pressure for which the pipes located on the discharge of these pumps and compressors are designed.

b) When provided on the pump discharge for this purpose, safety valves are to lead back to the pump suction or to any other suitable place.

c) The discharge capacity of the safety valves installed on pumps and compressors is to be such that the pressure at the discharge side cannot exceed by more than 10% the design pressure of the discharge pipe in the event of operation with closed discharge.

2.5.4 Protection of pipes

a) Pipes likely to be subjected to a pressure exceeding their normal working pressure are to be provided with safety valves or equivalent overpressure protecting devices.

b) In particular, pipes located on the low pressure side of pressure reducing valves are to be provided with safety valves unless they are designed for the maximum pressure on the high pressure side of the pressure reducing valve. See also [1.3.2] and [2.9.1].

c) The discharge capacity of the devices fitted on pipes for preventing overpressure is to be such that the pressure in these pipes cannot exceed the design pressure by more than 10%.

2.6 Flexible hoses and expansion joints

2.6.1 General

a) Definitions:
   - Flexible hose assembly: short length of metallic or non-metallic hose normally with prefabricated end fittings ready for installation
   - Expansion joint: an assembly designed to safely absorb the heat-induced expansion and contraction, mainly to allow axial relative movement between pipes and the ship's structure as required in [5.6].

b) Flexible hoses and expansion joints are to be of a type approved by the Society. Unless otherwise specified, they are to comply with the requirements of this sub-article.

c) The requirements of this sub-article apply to flexible hoses and expansion joints of metallic or non-metallic material intended for a permanent connection between a fixed piping system and items of machinery. The requirements may also be applied to temporarily connected flexible hoses or hoses of portable equipment.

d) Unless otherwise specified, the requirements of this sub-article do not apply for flexible hose assemblies and expansion joints intended to be used in fire extinguishing systems.

e) Flexible hose assemblies and expansion joints intended for piping systems with a design temperature below the ambient temperature are subject to special consideration by the Society.

f) Specific requirements for flexible hoses and expansion joints intended for cargo pipe lines are given in:
   - Part D, Chapter 7 for oil tankers
   - Part D, Chapter 8 for chemical tankers
   - Part D, Chapter 9 for liquefied gas carriers
   - NR 620 for flexible hoses intended for LNG bunkering.

2.6.2 General conditions of use applicable to flexible hoses and expansion joints

a) Unless otherwise specified, the Society may permit the use of flexible hoses and expansion joints, made of both metallic and non-metallic materials, provided they are approved for the intended service. They may be accepted for use in oil fuel, lubricating, hydraulic and thermal oil systems, fresh water and sea water cooling systems, compressed air systems, bilge and ballast systems, Class III steam systems and exhaust gas systems where they comply with the requirements of this sub-article.

b) For steam systems, the flexible hose assemblies and expansion joints are to be of metallic construction.

c) The position of flexible hose assemblies and expansion joints is to be clearly shown on the drawings listed in [1.2.1] and [1.2.2] when submitted to the Society.

d) Flexible hose assembly or an expansion joint is to be selected for the intended location and application taking into consideration ambient conditions, compatibility with fluids under working pressure and temperature conditions consistent with the manufacturer's instructions and any requirements of the Society.

e) The arrangement and installation of the flexible hose assemblies and expansion joints are also to comply with [5.9.3].

2.6.3 Specific conditions of use applicable to flexible hoses

a) Flexible hose assembly is not accepted in high pressure fuel oil injection systems.

b) Flexible hose assemblies for essential services or containing either flammable or toxic media are not to exceed 1,5 m in length.

2.6.4 General requirements for the design of flexible hoses and expansion joints

a) Flexible hoses and expansion joints are to be designed and constructed in accordance with recognised National or International standards acceptable to the Society.

b) Acceptance of a flexible hose assembly or an expansion joint is subject to satisfactory prototype testing in accordance with the provisions of [20.2].

c) The material, design and construction are to be at least suitable for:
   - marine environment and external contact with hydrocarbons
   - internal contact and resistance to the fluid they are to convey
   - maximal pressure and temperature of fluid they are to convey
   - maximum expected forces due to vibrations
   - maximum expected impulse peak pressure.

   The metallic materials are to comply with [2.1.2].

d) Where rubber materials are intended for use in bilge, ballast, compressed air, oil fuel, lubricating, hydraulic and thermal oil systems, the construction is to incorporate a single, double or more, closely woven integral wire braid or other suitable material reinforcement acceptable to the Society.

   Flexible hoses and expansion joints of plastic materials for the same purposes, such as Teflon or Nylon, which are unable to be reinforced by incorporating closely woven integral wire braid, are to have suitable material reinforcement, as far as practicable.

   Rubber or plastic material hoses and expansion joints used in oil supply lines to burners are to have external wire braid protection in addition to the reinforcement mentioned above.

e) Flexible hose assemblies and expansion joints constructed of non-metallic materials, which are intended for installation in piping systems for flammable media or in sea water systems where failure may result in flooding, are to be of fire-resistant type except in cases where such hoses are installed on open decks as defined in Ch 4, Sec 5, [1.5.2], item b), (10) and not used for fuel oil lines.

   Fire resistance is to be demonstrated by testing in accordance with the standards specified in Tab 36 and Tab 38.

f) Flexible hoses and expansion joints are to be complete with approved end fittings in accordance with manufacturer's specification. The end connections that do not have a flange are to comply with [2.4.5] as applicable and each type of hose/fitting combination is to be subject to prototype testing to the same standard as that required by the hose or expansion joint with particular reference to pressure and impulse tests.

2.6.5 Specific requirements for the design of flexible hoses

The hose clamps and similar types of end attachments are not acceptable for use in piping systems for steam, flammable media, starting air systems or for sea water systems where failure may result in flooding. In other piping systems, the use of hose clamps may be accepted where the working pressure is less than 0,5 MPa and provided that there are double clamps at each end connection.

2.6.6 Marking

Flexible hoses or expansion joints are to be permanently marked by the manufacturer with the following details:

- manufacturer's name or trademark
- date of manufacture (month/year)
- designation type reference
- nominal diameter
- pressure rating
- temperature rating.

Where a flexible hose assembly or an expansion joint is made up of items from different manufacturers, the components are to be clearly identified and traceable to evidence of prototype testing.

2.7 Valves and accessories

2.7.1 General

a) Valves and accessories are normally to be built in accordance with a recognised standard. Otherwise, they are subject to special consideration for approval by the Society.

Valves and fittings in piping systems are to be compatible with the pipes to which they are attached in respect of their strength (see [1.3.2] for design pressure) and are to be suitable for effective operation at the maximum working pressure they will experience in service.

Valves and accessories which are fitted:

- in a class I piping system, or
- in a class II piping system, or
- on the ship side, on the collision bulkhead, on fuel oil tanks or on lubricating oil tanks under static pressure,

are to be subject to the applicable testing and inspection required by the Rules. See [20.7.1].

b) Shut-off valves are to be provided where necessary to isolate pumps, heat exchangers, pressure vessels, etc., from the rest of the piping system when necessary, and in particular:

- to allow the isolation of duplicate components without interrupting the fluid circulation
- for survey or repair purposes.

2.7.2 Design of valves and accessories

a) Materials of valve and accessory bodies are to comply with the provisions of [2.1].

b) Connections of valves and accessories with pipes are to comply with the provisions of [2.4].

c) All valves and accessories are to be so designed as to prevent the loosening of covers and glands when they are operated.

d) Valves are to be so designed as to shut with a right-hand (clockwise) motion of the wheels.

e) Valves are to be provided with local indicators showing whether they are open or shut, unless this is readily apparent.

2.7.3 Valves with remote control

a) Unless otherwise specified, the valves and cocks which can not be fitted in places where they are at all times readily accessible are to be provided with remote control.

All valves which are provided with remote control are also to be designed for local manual operation.

b) The remote control system and means of local operation are to be independent. For shipside valves and valves on the collision bulkhead, the means for local manual operation are to be permanently attached.

c) For submerged valves in ballast, cargo, or other tanks where accepted by the Society, local manual operation may be by extended spindle or portable hand pump.

The manual operation by hand pump is to have the control lines to each submerged valve provided with the quick coupling connections, as close to the valve actuator as practicable, to allow easy connection of the hand pump. For shipside valves and valves on the collision bulkhead, the hand pump is to be permanently attached and fitted to the quick coupling connection. For other valves, not less than two portable hand pumps are to be provided.

d) In the case of valves which are to be provided with remote control in accordance with the Rules, opening and/or closing of the valves by local manual means is not to render the remote control system inoperable.

e) Power failure of the remote control system is not to cause an undesired change of the valve position.

f) Unless otherwise specified, indicators are to be provided on the remote controls to show whether the valves are open or closed.

The indicators for local manual control are to comply with [2.7.2], item e).

2.8 Sea inlets and overboard discharges

2.8.1 General

a) Except where expressly stated in Article [8], the requirements of this sub-article do not apply to scuppers and sanitary discharges.

b) Unless otherwise specified, the number of sea inlets is to be as stated in [10.7].

c) The sea inlets are to comply also with the requirements specified for particular service notations or additional class notations, such as:

- Pt D, Ch 7, Sec 4, [2.3.6] for oil tankers and FLS tankers
- Pt E, Ch 4, Sec 3, [3.3.2] for fire fighting ships
- Pt D, Ch 15, Sec 4, [1.8] for fishing vessels
- Pt F, Ch 8, Sec 3, [3.2] for navigation in ice
- Pt F, Ch 8, Sec 4, [6.3.2] for navigation in cold weather conditions.

2.8.2 Design of sea inlets and overboard discharges

a) All inlets and discharges in the shell plating are to be fitted with efficient and accessible arrangements for preventing the accidental admission of water into the ship.

b) Sea inlets and overboard discharges are to be fitted with valves complying with [2.7] and [2.8.3].

c) Machinery space main and auxiliary sea inlets and discharges in connection with the operation of machinery are to be fitted with readily accessible valves between the pipes and the shell plating or between the pipes and fabricated boxes attached to the shell plating. The valves may be controlled locally and are to be provided with indicators showing whether they are open or closed.

d) Sea inlets are to be so designed and arranged as to limit turbulence and to avoid the admission of air due to motion of the ship.

e) Sea inlets are to be fitted with gratings complying with [2.8.4].

f) Provisions are to be made for clearing sea inlet gratings.

g) Sea chests are to be suitably protected against corrosion.

h) Sea water suction lines are to be fitted with strainers having a free passage area of at least twice that of the sea suction valve.

2.8.3 Valves

a) Sea inlet and overboard discharge valves are to be secured:

- directly on the shell plating, or
- on sea chests built on the shell plating, with scantlings in compliance with Part B of the Rules, or
- on extra-reinforced and short distance pieces attached to the shell (see Tab 6).

b) The bodies of the valves and distance pieces are to have a spigot passing through the plating without projecting beyond the external surface of such plating or of the doubling plates and stiffening rings, if any.

c) Valves are to be secured by means of:

- bolts screwed through the plating with a countersunk head, or
- studs screwed in heavy pads themselves secured to the hull or chest plating, without penetration of the plating by the stud holes.

d) The use of butterfly valves will be specially considered by the Society. In any event, butterfly valves not fitted with flanges are not to be used for water inlets or overboard discharges unless provisions are made to allow disassembling at sea of the pipes served by these valves without any risk of flooding.

e) The materials of the valve bodies and connecting pieces are to comply with Tab 5.

f) Ship side valves serving piping systems made of plastics are to comply with following requirements:

- the ship side valves required in [2.8.2] and, where provided, the connecting pipes to the shell are to be made of metal in accordance with [2.1], and
- Ship side valves are to be provided with remote control from outside the space concerned. See Ch 1, App 3, Tab 1

g) In manned machinery spaces, the valves may be controlled locally and shall be provided with indicators showing whether they are open or closed. Location of controls shall comply with [5.5.4].

2.8.4 Gratings

a) Gratings are to have a free flow area not less than twice the total section of the pipes connected to the inlet.

b) When gratings are secured by means of screws with a countersunk head, the tapped holes provided for such screws are not to pass through the plating or doubling plates outside distance pieces or chests.

c) Screws used for fixing gratings are not to be located in the corners of openings in the hull or of doubling plates.

d) In the case of large sea inlets, the screws used for fixing the gratings are to be locked and protected from corrosion.

e) When gratings are cleared by use of compressed air or steam devices, the chests, distance pieces and valves of sea inlets and outlets thus arranged are to be so constructed as to withstand the maximum pressure to which they may be subjected when such devices are operating.

f) For additional class notation **INWATERSURVEY**, see Pt F, Ch 15, Sec 3.

2.8.5 Ship side connections for blow-down of boilers

a) Blow-down pipes of boilers are to be provided with cocks or valves placed as near the end of the pipes as possible, while remaining readily accessible and located above the engine room floor.

b) Blow-down valves are to be so designed that it is easy to ascertain whether they are open or shut. Where cocks are used, the control keys are to be such that they cannot be taken off unless the cocks are shut. Where valves are used, the control-wheels are to be permanently fixed to the spindle.

c) A protection ring is to be fitted on the shell plating, outside, at the end of the blow-down pipes. The spigot of the valve referred to in [2.8.3], item b), is to pass through this ring.

2.9 Control and monitoring

2.9.1 General

a) Local indicators are to be provided for at least the following parameters:
   - pressure, in pressure vessels, at pump or compressor discharge, at the inlet of the equipment served, on the low pressure side of pressure reducing valves
   - temperatures, in tanks and vessels, at heat exchanger inlet and outlet
   - levels, in tanks and vessels containing liquids.

b) Safeguards are to be provided where an automatic action is necessary to restore acceptable values for a faulty parameter.

c) Automatic controls are to be provided where it is necessary to maintain parameters related to piping systems at a pre-set value.

2.9.2 Level gauges

Level gauges used in flammable oil systems are to be of a type approved by the Society and are subject to the following conditions:

- in passenger ships, they are not to require penetration below the top of the tank and their failure or overfilling of the tanks is not to permit release of flammable oil
- in cargo ships, their failure or overfilling of the tank is not to permit release of flammable oil into the space. The use of cylindrical gauges is prohibited. The Society may permit the use of oil-level gauges with flat glasses and self-closing valves between the gauges and flammable oil tanks.
- their glasses are to be made of heat-resistant material and efficiently protected against shocks.

On cargo ships of less than 500 gross tonnage and non-propelled ships:

- cylindrical gauges may be used provided they are fitted with self-closing valves at their lower end as well as at their upper end if the latter is below the maximum liquid level
- in the case of tanks not subject to filling by power pumps, with the exception of fuel oil service tanks, the valves need not be of the self-closing type. Such valves are, however, to be readily accessible and instruction plates are to be fitted adjacent to them specifying that they are to be kept closed.

3 Welding of steel piping

3.1 Application

3.1.1

a) The following requirements apply to welded joints belonging to class I or II piping systems.

   They may also be applied to class III piping systems, at the discretion of the Society.

b) This article does not apply to refrigerated cargo installation piping systems operating at temperatures lower than minus 40°C.

c) The requirements for qualification of welding procedures are given in NR216 Materials and Welding.

3.2 General

3.2.1 Welding processes

a) Welded joints of pipes are to be made by means of electric arc or oxyacetylene welding, or any other previously approved process.

b) When the design pressure exceeds 0,7 MPa, oxyacetylene welding is not permitted for pipes with an external diameter greater than 100 mm or a thickness exceeding 6 mm.

3.2.2 Location of joints

The location of welded joints is to be such that as many as possible can be made in a workshop. The location of welded joints to be made on board is to be so determined as to permit their joining and inspection in satisfactory conditions.

3.3 Design of welded joints

3.3.1 Types of joints

a) Except for the fixing of flanges on pipes in the cases mentioned in Fig 1 and for the fixing of branch pipes, joints between pipes and between pipes and fittings are to be of the butt-welded type. Other type of connections might be accepted by the Society according to Tab 15.

b) For butt-welded joints between pipes or between pipes and flanges or other fittings, correctly adjusted backing rings may be used; such rings are to be either of the same grade of steel as the elements to be welded or of such a grade as not to adversely influence the weld; if the backing ring cannot be removed after welding, it is to be correctly profiled.

3.3.2 Assembly of pipes of unequal thickness

If the difference of thickness between pipes to be butt-welded exceeds 10% of the thickness of the thinner pipe plus 1 mm, subject to a maximum of 4 mm, the thicker pipe is to be thinned down to the thickness of the thinner pipe on a length at least equal to 4 times the offset, including the width of the weld if so desired.

3.3.3 Accessories

a) When accessories such as valves are connected by welding to pipes, they are to be provided with necks of sufficient length to prevent abnormal deformations during the execution of welding or heat treatment.

b) For the fixing by welding of branch pipes on pipes, it is necessary to provide either a thickness increase as indicated in [2.2.5] or a reinforcement by doubling plate or equivalent.

3.4 Preparation of elements to be welded and execution of welding

3.4.1 General

Attention is drawn to the provisions of Ch 1, Sec 3, which apply to the welding of pressure pipes.

3.4.2 Edge preparation for welded joints

The preparation of the edges is preferably to be carried out by mechanical means. When flame cutting is used, care is to be taken to remove the oxide scales and any notch due to irregular cutting by matching, grinding or chipping back to sound metal.

3.4.3 Abutting of parts to be welded

a) The elements to be welded are to be so abutted that surface misalignments are as small as possible.

b) As a general rule, for elements which are butt-welded without a backing ring the misalignment between internal walls is not to exceed the lesser of:
   - the value given in Tab 19 as a function of thickness t and internal diameter d of these elements, and
   - t/4.

   Where necessary, the pipe ends are to be bored or slightly expanded so as to comply with these values; the thickness obtained is not to be less than the Rule thickness.

c) In the case of welding with a backing ring, smaller values of misalignment are to be obtained so that the space between the backing ring and the internal walls of the two elements to be assembled is as small as possible; normally this space is not to exceed 0,5 mm.

d) The elements to be welded are to be adequately secured so as to prevent modifications of their relative position and deformations during welding.

Table 19 : Maximum value of misalignment

d (mm)	t (mm)		
	t ≤ 6	6 < t ≤ 10	10 < t
d < 150	1,0	1,0	1,0
150 ≤ d < 300	1,0	1,5	1,5
300 ≤ d	1,0	1,5	2,0

3.4.4 Protection against adverse weather conditions

a) Pressure pipes are to be welded, both on board and in the shop, away from draughts and sudden temperature variations.

b) Unless special justification is given, no welding is to be performed if the temperature of the base metal is lower than 0°C.

3.4.5 Preheating

a) Preheating is to be performed as indicated in Tab 20, depending on the type of steel, the chemical composition and the pipe thickness.

b) The temperatures given in Tab 20 are based on the use of low hydrogen processes. Where low hydrogen processes are not used, the Society reserves the right to require higher preheating temperatures.

Table 20 : Preheating temperature

Type of steel		Thickness of thicker part (mm)	Minimum preheating temperature (°C)
C and C-Mn steels	$C + \frac{Mn}{6} \le 0{,}40$	$t \ge 20$ **(2)**	50
	$C + \frac{Mn}{6} > 0{,}40$	$t \ge 20$ **(2)**	100
0,3 Mo		$t \ge 13$ **(2)**	100
1 Cr 0,5 Mo		$t < 13$ $t \ge 13$	100 150
2,25 Cr 1 Mo **(1)**		$t < 13$ $t \ge 13$	150 200
0,5 Cr 0,5 Mo V **(1)**		$t < 13$ $t \ge 13$	150 200

(1) For 2,25 Cr 1 Mo and 0,5 Cr 0,5 Mo V grades with thicknesses up to 6 mm, preheating may be omitted if the results of hardness tests carried out on welding procedure qualification are considered acceptable by the Society.

(2) For welding in ambient temperature below 0°C, the minimum preheating temperature is required independent of the thickness unless specially approved by the Society.

3.5 Post-weld heat treatment

3.5.1 General

a) As far as practicable, the heat treatment is to be carried out in a furnace. Where this is impracticable, and more particularly in the case of welding on board, the treatment is to be performed locally by heating uniformly a circular strip, extending on at least 75 mm on both sides of the welded joint; all precautions are to be taken to permit accurate checking of the temperature and slow cooling after treatment.

b) For austenitic and austenitic ferritic steels, post-weld head treatment is generally not required.

3.5.2 Heat treatment after welding other than oxyacetylene welding

a) Stress relieving heat treatment after welding other than oxyacetylene welding is to be performed as indicated in Tab 21, depending on the type of steel and thickness of the pipes.

b) The stress relieving heat treatment is to consist in heating slowly and uniformly to a temperature within the range indicated in Tab 21, soaking at this temperature for a suitable period, normally one hour per 25 mm of thickness with a minimum of half an hour, cooling slowly and uniformly in the furnace to a temperature not exceeding 400°C and subsequently cooling in still atmosphere.

c) In any event, the heat treatment temperature is not to be higher than $(T_T - 20)$°C, where T_T is the temperature of the final tempering treatment of the material.

3.5.3 Heat treatment after oxyacetylene welding

Stress relieving heat treatment after oxyacetylene welding is to be performed as indicated in Tab 22, depending on the type of steel.

Table 21 : Heat treatment temperature

Type of steel	Thickness of thicker part (mm)	Stress relief treatment temperature (°C)
C and C-Mn steels	t ≥ 15 **(1)** **(3)**	550 to 620
0,3 Mo	t ≥ 15 **(1)**	580 to 640
1 Cr 0,5 Mo	t ≥ 8	620 to 680
2,25 Cr 1 Mo 0,5 Cr 0,5 Mo V	any **(2)**	650 to 720

(1) Where steels with specified Charpy V notch impact properties at low temperature are used, the thickness above which post-weld heat treatment is to be applied may be increased, subject to the special agreement of the Society.

(2) For 2,25Cr 1Mo and 0,5Cr 0,5Mo V grade steels, heat treatment may be omitted for pipes having thickness lower than 8 mm, diameter not exceeding 100 mm and service temperature not exceeding 450°C.

(3) For C and C-Mn steels, stress relieving heat treatment may be omitted up to 30 mm thickness, subject to the special agreement of the Society.

Table 22 : Heat treatment after oxyacetylene welding

Type of steel	Heat treatment and temperature (°C)
C and C-Mn	Normalising 880 to 940
0,3 Mo	Normalising 900 to 940
1Cr-0,5Mo	Normalising 900 to 960 Tempering 640 to 720
2,25Cr-1Mo	Normalising 900 to 960 Tempering 650 to 780
0,5Cr-0,5Mo-0,25V	Normalising 930 to 980 Tempering 670 to 720

3.6 Inspection of welded joints

3.6.1 General

a) The inspection of pressure pipe welded joints is to be performed at the various stages of the fabrication further to the qualifications defined in [3.1.1], item c).

b) The examination mainly concerns those parts to be welded further to their preparation, the welded joints once they have been made and the conditions for carrying out possible heat treatments.

c) The required examinations are to be carried out by qualified operators in accordance with procedures and techniques to the Surveyor's satisfaction.

3.6.2 Visual examination

Welded joints, including the inside wherever possible, are to be visually examined.

3.6.3 Non-destructive examinations

Non-destructive tests required are given in:

- Tab 23 for class I pipes
- Tab 24 for class II pipes.

Table 23 : Class I pipe - Type of welded joints

Class I pipe outer diameter D	Butt welded joint	Fillet weld for flange connection	Other welded joint which cannot be radiographed
Frequency of testing	every weld for D > 75 mm minimum 10% of welds selected in agreement with the Surveyor for D ≤ 75 mm	every weld for D > 75 mm minimum 10% of welds selected in agreement with the Surveyor for D ≤ 75 mm	every weld for D > 75 mm minimum 10% of welds selected in agreement with the Surveyor for D ≤ 75 mm
Extent of testing	full length	full length	full length
Type of testing	radiographic or equivalent accepted by the Society	magnetic particle or liquid penetrant	magnetic particle or liquid penetrant

Table 24 : Class II pipe - Type of welded joints

Class II pipe outer diameter D	Butt welded joint	Fillet weld for flange connection	Other welded joint which cannot be radiographed
Frequency of testing	minimum 10% of welds selected in agreement with the Surveyor for D > 100 mm	minimum 10% of welds selected in agreement with the Surveyor for D > 100 mm	minimum 10% of welds selected in agreement with the Surveyor for D > 100 mm
Extent of testing	full length	full length	full length
Type of testing	radiographic or equivalent accepted by the Society	magnetic particle or liquid penetrant	magnetic particle or liquid penetrant

3.6.4 Defects and acceptance criteria

a) Joints for which non-destructive examinations reveal unacceptable defects are to be re-welded and subsequently to undergo a new non-destructive examination. The Surveyor may require that the number of joints to be subjected to non-destructive examination is larger than that resulting from the provisions of [3.6.3].

b) Acceptance criteria and repairs

- Indications evaluated to be crack, lack of fusion or lack of penetration for class I pipes are not acceptable. Indications evaluated to be crack or lack of fusion in welds for class II pipes are not acceptable. Other types of imperfection are to be assessed in accordance with a recognised standard accepted by the Society.
- Unacceptable indications are to be eliminated and repaired where necessary. The repair welds are to be examined on their full length using magnetic particle or liquid penetrant test and ultrasonic or radiographic testing.

  When unacceptable indications are found, additional area of the same weld length are to be examined unless the indication is judged isolated without any doubt. In case of automatic welded joints, additional NDE is to be extended to all areas of the same weld length.

  The extent of examination can be increased at the surveyor's discretion when repeated non-acceptable indications are found.

4 Bending of pipes

4.1 Application

4.1.1 This Article applies to pipes made of:

- alloy or non-alloy steels,
- copper and copper alloys.

4.2 Bending process

4.2.1 General

The bending process is to be such as not to have a detrimental influence on the characteristics of the materials or on the strength of the pipes.

4.2.2 Bending radius

Unless otherwise justified, the bending radius measured on the centreline of the pipe is not to be less than:

- twice the external diameter for copper and copper alloy pipes,
- 3 times the external diameter for cold bent steel pipes.

4.2.3 Acceptance criteria

a) The pipes are to be bent in such a way that, in each transverse section, the difference between the maximum and minimum diameters after bending does not exceed 10% of the mean diameter; higher values, but not exceeding 15%, may be allowed in the case of pipes which are not subjected in service to appreciable bending stresses due to thermal expansion or contraction.

b) The bending is to be such that the depth of the corrugations is as small as possible and does not exceed 5% of their length.

4.2.4 Hot bending

a) In the case of hot bending, all arrangements are to be made to permit careful checking of the metal temperature and to prevent rapid cooling, especially for alloy steels.

b) Hot bending is to be generally carried out in the temperature range 850°C - 1000°C for all steel grades; however, a decreased temperature down to 750°C may be accepted during the forming process.

4.3 Heat treatment after bending

4.3.1 Copper and copper alloy

Copper and copper alloy pipes are to be suitably annealed after cold bending if their external diameter exceeds 50 mm.

4.3.2 Steel

a) After hot bending carried out within the temperature range specified in [4.2.4], the following applies:
   - for C, C-Mn and C-Mo steels, no subsequent heat treatment is required,
   - for Cr-Mo and C-Mo-V steels, a subsequent stress relieving heat treatment in accordance with Tab 21 is required.

b) After hot bending performed outside the temperature range specified in [4.2.4], a subsequent new heat treatment in accordance with Tab 22 is required for all grades.

c) After cold bending at a radius lower than 4 times the external diameter of the pipe, a heat treatment in accordance with Tab 22 is required.

5 Arrangement and installation of piping systems

5.1 General

5.1.1 Unless otherwise specified, piping and pumping systems covered by the Rules are to be permanently fixed on board ship.

5.2 Location of tanks and piping system components

5.2.1 Flammable oil systems

Location of tanks and piping system components conveying flammable fluids under pressure is to comply with [5.10].

5.2.2 Piping systems with open ends

Attention is to be paid to the requirements for the location of open-ended pipes on board ships having to comply with the provisions of [5.5].

5.2.3 Pipe lines located inside tanks

a) The passage of pipes through tanks, when permitted, normally requires special arrangements such as reinforced thickness or tunnels, in particular for:
   - bilge pipes
   - ballast pipes
   - scuppers and sanitary discharges
   - air, sounding and overflow pipes
   - fuel oil pipes.

b) Junctions of pipes inside tanks are to be made by welding or flange connections. See also [2.4.3].

5.2.4 Overboard discharges

a) All discharges in the shell plating below the freeboard deck shall be fitted with efficient and accessible arrangements for preventing the accidental admission of water into the ship.

b) In manned machinery spaces, the valves may be controlled locally and shall be provided with indicators showing whether they are open or closed. For control of discharge valves fitted below the waterline, see [5.5.4].

c) Overboard discharges are to be so located as to prevent any discharge of water into the lifeboats while they are being lowered.

5.2.5 Piping and electrical apparatus

As far as possible, pipes are not to pass near switchboards or other electrical apparatus. If this requirement is impossible to satisfy, gutterways or masks are to be provided wherever deemed necessary to prevent projections of liquid or steam on live parts.

5.3 Passage through bulkheads or decks

5.3.1 General

For ships other than cargo ships, see also the additional requirements for the relevant service notations.

5.3.2 Penetration of watertight bulkheads or decks and fire divisions

a) Where penetrations of watertight bulkheads or decks and fire divisions are necessary for piping and ventilation, arrangements are to be made to maintain the watertight integrity and fire integrity. See also Ch 4, Sec 5, [2].

Note 1: In cargo ships, the Society may permit relaxation in the watertightness of opening above the freeboard deck, provided that it is demonstrated that any progressive flooding can be easily controlled and that the safety of the ship is not impaired

b) Lead or other heat sensitive materials are not to be used in piping systems which penetrate watertight subdivision bulkheads or decks, where deterioration of such systems in the event of fire would impair the watertight integrity of the bulkhead or decks.

This applies in particular to the following systems:

- bilge system
- ballast system
- scuppers and sanitary discharge systems.

Note 2: Any penetration used for the passage of heat-sensitive piping systems through a watertight bulkhead or deck as item b) above is to be tested with the heat sensitive piping and is to be type approved for watertight integrity as per paragraphs 4 and 5 of the explanatory notes to regulation II-1/13.2.3 contained in the annex of resolution MSC.429(98)/ Rev.2, as applicable, after the fire test.

Note 3: Item b) above is not to be applied to cable penetrations in watertight bulkheads and decks.

c) Where bolted connections are used when passing through watertight bulkheads or decks, the bolts are not to be screwed through the plating. Where welded connections are used, they are to be welded on both sides of the bulkhead or deck.

d) Penetrations of watertight bulkheads or decks and fire divisions by plastic pipes are to comply with Ch 1, App 3, [4.7.2].

5.3.3 Passage through the collision bulkhead

a) Except as provided in b), the collision bulkhead may be pierced below the bulkhead deck of passenger ships and the freeboard deck of cargo ships by not more than one pipe for dealing with fluid in the forepeak tank, provided that the pipe is fitted with a remotely controlled valve capable of being operated from above the bulkhead deck of passenger ships and the freeboard deck of cargo ships. The valve shall be normally closed. If the remote control system should fail during operation of the valve, the valve shall close automatically or be capable of being closed manually from a position above the bulkhead deck of passenger ships and the freeboard deck of cargo ships. The valve shall be located at the collision bulkhead on either the forward or aft side, provided the space on the aft side is not a cargo space. The valve shall be of steel, bronze or other approved ductile material. Valves of ordinary cast iron or similar material are not acceptable.

b) If the forepeak is divided to hold two different kinds of liquids the Society may allow the collision bulkhead to be pierced below the bulkhead deck of passenger ships and the freeboard deck of cargo ships by two pipes, each of which is fitted as required by a), provided the Society is satisfied that there is no practical alternative to the fitting of such a second pipe and that, having regard to the additional subdivision provided in the forepeak, the safety of the ship is maintained

c) The remote operation device of the valve referred to in a) is to include an indicator to show whether the valve is open or shut.

5.4 Independence of lines

5.4.1 Independence between bilge and ballast lines

These lines are to be independent. This requirement does not need to be fulfilled for:

- pipes located between collecting boxes and pump suctions
- pipes located between pumps and overboard discharges

5.4.2 Liquid cargo, lubricating oil and fuel oil

These lines are not to be connected to bilge and ballast lines.

5.4.3 Pipe lines connected to tanks used alternatively as ballast, fuel oil, liquid or dry cargo when permitted

Such pipes shall be fitted with blind flanges or other appropriate change over-devices in order to avoid any mishandling.

5.5 Prevention of progressive flooding

5.5.1 Principle

a) In order to comply with the subdivision and damage stability requirements of Pt B, Ch 3, Sec 3, provision is to be made to prevent any progressive flooding of a dry compartment served by any open-ended pipe, in the event that such pipe is damaged or broken in any other compartment by collision or grounding.

b) For this purpose, if pipes are situated within assumed flooded compartments, arrangements are to be made to ensure that progressive flooding cannot thereby extend to compartments other than those assumed to be flooded for each case of damage. However, the Society may permit minor progressive flooding if it is demonstrated that its effects can be easily controlled and the safety of the ship is not impaired. Refer to Pt B, Ch 3, Sec 3.

5.5.2 Extent of damage

For the definition of the assumed transverse extent of damage, reference is to be made to Pt B, Ch 3, Sec 3.

5.5.3 Piping arrangement

a) The assumed transverse extent of damage is not to contain any pipe with an open end in a compartment located outside this extent, except where the section of such pipe does not exceed 710 mm^2.

Note 1: Where several pipes are considered, the limit of 710 mm^2 applies to their total section.

b) Where the provisions of item a) cannot be fulfilled, and after special examination by the Society, pipes may be situated within the assumed transverse extent of damage penetration provided that:
   - either a closable valve operable from above the bulkhead deck is fitted at each penetration of a watertight subdivision and secured directly on the bulkhead, or
   - a closable valve operable from above the bulkhead deck is fitted at each end of the pipe concerned, the valves and their control system being inboard of the assumed extent of damage, or
   - the tanks to which the pipe concerned leads are regarded in the damage stability calculations as being flooded when damage occurs in a compartment through which the pipe passes.

c) Valves required to be operable from above the bulkhead deck are to be fitted with an indicator to show whether the valve is open or shut.

   Where the valve is remote controlled by other than mechanical means, and where the remote control system is located, even partly, within the assumed extent of damage penetration, this system is to be such that the valve is automatically closed by loss of power.

d) Air and overflow pipes are to be so arranged as to prevent the possibility of flooding of other tanks in other watertight compartments in the event of any one tank being flooded.

   This arrangement is to be such that in the range of positive residual righting levers beyond the angle of equilibrium stage of flooding, the progressive flooding of tanks or watertight compartments other than that flooded does not occur.

5.5.4 Suction and discharge valves below the waterline

a) The location of the controls of any valve serving a sea inlet, a discharge below the waterline or a bilge injection system shall be so sited as to allow adequate time for operation in case of influx of water to the space, having regard to the time likely to be required in order to reach and operate such controls. If the level to which the space could become flooded with the ship in the fully loaded condition so requires, arrangements shall be made to operate the controls from a position above such level.

A calculation is to be carried out to show that the time taken from alarm activation plus the time to reach and fully close manually operated or powered valves is less than the time taken for the influx of water to reach the control without submergence of the platform on which the person is operating the valves. If necessary a remote control device is to be fitted above the level.

Note 1: The time it takes for the influx of water to reach the control of valves should be based on a breach in the largest diameter seawater line in the lowest location in the engine room when the ship is fully loaded.

Note 2: The time it takes to reach the sea valves should be determined based on the distance between the navigation bridge and the platform from where the valves associated with the aforementioned seawater line are manually operated (or the actuator for valves controlled by stored mechanical energy).

Note 3: In the event calculations are not available, 10 minutes shall be regarded as adequate time for operation unless other requirements are specified by the flag Administration.

b) When the Administration of the State whose flag the ship is entitled to fly has issued specific rules covering flooding protection, the Society may accept such rules for classification purposes in lieu of those given in item a).

5.6 Provision for expansion

5.6.1 General

Piping systems are to be so designed and pipes so fixed as to allow for relative movement between pipes and the ship's structure, having due regard to the:

- temperature of the fluid conveyed
- coefficient of thermal expansion of the pipes material
- deformation of the ship's hull.

5.6.2 Fitting of expansion devices

All pipes subject to thermal expansion and those which, due to their length, may be affected by deformation of the hull, are to be fitted with expansion pieces or loops.

5.7 Supporting of the pipes

5.7.1 General

Unless otherwise specified, the fluid lines referred to in this Section are to consist of pipes connected to the ship's structure by means of collars or similar devices.

5.7.2 Arrangement of supports

Shipyards are to take care that:

a) The arrangement of supports and collars is to be such that pipes and flanges are not subjected to abnormal bending stresses, taking into account their own mass, the metal they are made of, and the nature and characteristics of the fluid they convey, as well as the contractions and expansions to which they are subjected.

b) Heavy components in the piping system, such as valves, are to be independently supported.

5.8 Protection of pipes

5.8.1 Protection against shocks

Pipes passing through cargo holds and ‘tweendecks are to be protected against shocks by means of strong casings.

5.8.2 Protection of sea water pipes from mechanical damage

Seawater pipes in cargo holds for dry cargoes, including cargo spaces of ships having the service notation **ro-ro passenger ship**, **PCTC, PCC**, **ro-ro cargo ship**, **container ship** or of ships having the additional service feature **equipped for the carriage of containers**, are to be protected from impact of cargo where they are liable to be damaged.

5.8.3 Protection against corrosion and erosion

a) Pipes are to be efficiently protected against corrosion, particularly in their most exposed parts, either by selection of their constituent materials, or by an appropriate coating or treatment.

b) The layout and arrangement of sea water pipes are to be such as to prevent sharp bends and abrupt changes in section as well as zones where water may stagnate. The inner surface of pipes is to be as smooth as possible, especially in way of joints. Where pipes are protected against corrosion by means of galvanising or other inner coating, arrangements are to be made so that this coating is continuous, as far as possible, in particular in way of joints.

c) If galvanised steel pipes are used for sea water systems, the water velocity is not to exceed 3 m/s.

d) If copper pipes are used for sea water systems, the water velocity is not to exceed 2 m/s.

e) Arrangements are to be made to avoid galvanic corrosion.

f) If aluminium bras pipes are used for sea water systems, the water velocity is not to exceed 3 m/s

g) If 90/10 copper-nickel-iron pipes are used for sea water systems, the water velocity is not to exceed 3,5 m/s

h) If 70/30 copper-nickel pipes are used for sea water systems, the water velocity is not to exceed 5 m/s

i) If GRP pipes are used for sea water systems, the water velocity is not to exceed 5 m/s.

Note 1: For the seawater velocity limits above, a tolerance of 10% is acceptable.

5.8.4 Protection against frosting

Pipes are to be adequately insulated against cold wherever deemed necessary to prevent frost.

This applies specifically to pipes passing through refrigerated spaces and which are not intended to ensure the refrigeration of such spaces.

5.8.5 Protection of high temperature pipes and components

a) All pipes and other components where the temperature may exceed 220°C are to be efficiently insulated. Where necessary, precautions are to be taken to protect the insulation from being impregnated with flammable oils.

b) Particular attention is to be paid to lagging in way of flanges.

5.9 Valves, accessories and fittings

5.9.1 General

Cocks, valves and other accessories are generally to be arranged so that they are easily visible and accessible for manoeuvring, control and maintenance. They are to be installed in such a way as to operate properly.

5.9.2 Valves and accessories

a) In machinery spaces and tunnels, the cocks, valves and other accessories of the fluid lines referred to in this Section are to be placed:

- above the floor, or
- when this is not possible, immediately under the floor, provided provision is made for their easy access and control in service.

b) Control-wheels of low inlet valves are to rise at least 0,45 m above the lowest floor.

5.9.3 Flexible hoses and expansion joints

a) Flexible hoses and expansion joints are to be in compliance with [2.6]. They are to be installed in clearly visible and readily accessible locations.

b) The number of flexible hoses and expansion joints is to be kept to minimum and limited for the purpose stated in [2.6.1], item c).

c) In general, flexible hoses and expansion joints are to be limited to a length necessary to provide for relative movement between fixed and flexibly mounted items of machinery/equipment or systems.

d) The installation of a flexible hose assembly or an expansion joint is to be in accordance with the manufacturer's instructions and use limitations, with particular attention to the following:

- orientation
- end connection support (where necessary)
- avoidance of hose contact that could cause rubbing and abrasion
- minimum bend radii.

e) Flexible hose assemblies or expansion joints are not to be installed where they may be subjected to torsion deformation (twisting) under normal operating conditions.

f) Where flexible hoses or an expansion joint are intended to be used in piping systems conveying flammable fluids that are in close proximity of heated surfaces, the risk of ignition due to failure of the hose assembly and subsequent release of fluids is to be mitigated, as far as practicable, by the use of screens or other similar protection, to the satisfaction of the Society.

g) The adjoining pipes are to be suitably aligned, supported, guided and anchored.

h) Isolating valves are to be provided permitting the isolation of flexible hoses intended to convey flammable oil or compressed air.

i) Expansion joints are to be protected against over extension or over compression.

j) Where they are likely to suffer external damage, flexible hoses and expansion joints are to be provided with adequate protection.

5.9.4 Thermometers

Thermometers and other temperature-detecting elements in fluid systems under pressure are to be provided with pockets built and secured so that the thermometers and detecting elements can be removed while keeping the piping under pressure.

5.9.5 Pressure gauges

Pressure gauges and other similar instruments are to be fitted with an isolating valve or cock at the connection with the main pipe.

5.9.6 Nameplates

a) Accessories such as cocks and valves on the fluid lines referred to in this Section are to be provided with nameplates indicating the apparatus and lines they serve except where, due to their location on board, there is no doubt as to their purpose.

b) Nameplates are to be fitted at the upper part of air and sounding pipes.

5.10 Additional arrangements for flammable fluids

5.10.1 General

All necessary precautions are to be taken to reduce fire risks from flammable liquids, such as:

- drips
- leaks under pressure
- overflow
- hydrocarbon accumulation in particular under lower floors
- discharges of oil vapours during heating
- soot or unburnt residue in smoke stacks or exhaust pipes.

Unless otherwise specified, the requirements in [5.10.3] apply to:

- fuel oil systems, in all spaces
- lubricating oil systems, in machinery spaces
- other flammable oil systems, in locations where means of ignition are present.

5.10.2 Prohibition of carriage of flammable oils in forepeak tanks

In cargo ships of more than 400 gross tonnage and in passenger ships, fuel oil, lubricating oil and other flammable oils are not to be carried in forepeak tanks or tanks forward of the collision bulkhead.

5.10.3 Prevention of flammable oil leakage ignition

a) As far as practicable, the piping arrangement in the flammable oil systems shall comply generally with the following:
   - The conveying of flammable oils through accommodation and service spaces is to be avoided. Where it is not possible, the arrangement may be subject to special consideration by the Society, provided that the pipes are of a material approved having regard to the fire risk.
   - The pipes are not to be located immediately above or close to the hot surfaces (exhaust manifolds, silencers, steam pipelines, boilers, etc.), electrical installations or other sources of ignition. Otherwise, suitably protection (screening and effective drainage to the safe position) is to be provided to prevent of spraying or leakage onto the sources of ignition.
   - Parts of the piping systems conveying heated flammable oils under pressure exceeding 0,18 MPa are to be placed above the platform or in any other position where defects and leakage can readily be observed. The machinery spaces in way of such parts are to be adequately illuminated.

b) No flammable oil tanks are to be situated where spillage or leakage therefrom can constitute a hazard by falling on:
   - hot surfaces, including those of boilers, heaters, steam pipes, exhaust manifolds and silencers
   - electrical equipment
   - air intakes
   - other sources of ignition.

c) Parts of flammable oil systems under pressure exceeding 0,18 MPa such as pumps, filters and heaters are to comply with the provisions of b) above.

d) Pipe connections, expansion joints and flexible parts of flammable oil lines are to be screened or otherwise suitably protected to avoid, as far as practicable, oil spray or oil leakages onto hot surfaces, into machinery air intakes, or on other sources of ignition. In case of additional class notation **AUT-IMS**, see also Pt F, Ch 3, Sec 4, [3.1.2]. The fastening of connections (nuts, screws, etc.) of lubricating oil or fuel oil pipes above 1,8 bar pressure is to be locked.

e) Any relief valve or air vent cock fitted within the flammable liquid systems is to discharge to a safe position, such as an appropriate tank.

f) Appropriate means are to be provided to prevent undue opening (due to vibrations) of air venting cocks fitted on equipment or piping containing flammable liquid under pressure.

5.10.4 Provisions for flammable oil leakage containment

a) Tanks used for the storage of flammable oils together with their fittings are to be so arranged as to prevent spillages due to leakage or overfilling.

b) Drip trays with adequate drainage to contain possible leakage from flammable fluid systems are to be fitted:
   - under independent tanks
   - under burners
   - under purifiers and any other oil processing equipment
   - under pumps, heat exchangers and filters
   - under valves and all accessories subject to oil leakage
   - surrounding internal combustion engines.

c) The coaming height of drip trays is to be appropriate for the service and not less than 75 mm. In case of additional class notation **AUT-IMS**, see also Pt F, Ch 3, Sec 4, [3.1.1].

d) Where boilers are located in machinery spaces on ‘tweendecks and the boiler rooms are not separated from the machinery spaces by watertight bulkheads, the ‘tweendecks are to be provided with oil-tight coamings at least 200 mm in height.

e) Where drain pipes are provided for collecting leakages, they are to be led to an appropriate drain tank.

f) The draining system of the room where thermal fluid heaters are fitted, as well as the save all of the latter, are not to allow any fire extension outside this room. See also [13.3.2].

5.10.5 Drain tank

a) The drain tank is not to form part of an overflow system and is to be fitted with an overflow alarm device.

b) In ships required to be fitted with a double bottom, appropriate precautions are to be taken when the drain tank is constructed in the double bottom, in order to avoid flooding of the machinery space where drip trays are located, in the event of accidentally running aground.

5.10.6 Valves

All valves and cocks forming part of flammable oil systems are to be capable of being operated from readily accessible positions and, in machinery spaces, from above the working platform.

5.10.7 Level switches

Level switches fitted to flammable oil tanks are to be contained in a steel or other fire-resisting enclosure.

6 Bilge systems

6.1 Application

6.1.1 This Article does not apply to bilge systems of non-propelled ships. See Part D, Chapter 14.

6.1.2 Ships assigned the additional service feature SPxxx or SPxxx-capable

Ships assigned the additional service feature **SPxxx** or **SPxxx-capable** are to comply, in addition to the applicable requirements of this Article, with the requirements of Pt D, Ch 11, Sec 4, [1], considering special personnel as passengers.

6.1.3 Ships assigned the additional service feature IPxxx or IPxxx-capable

Ships assigned the additional service feature **IPxxx** or **IPxxx-capable** are to comply, in addition to the applicable requirements of this Article, with the requirements of Pt D, Ch 11, Sec 4, [1], considering industrial personnel as passengers.

6.2 Principle

6.2.1 General

An efficient bilge pumping system shall be provided, capable of pumping from and draining any watertight compartment other than a space permanently appropriated for the carriage of fresh water, water ballast, fuel oil or liquid cargo and for which other efficient means of pumping are provided, under all practical conditions. Efficient means shall be provided for draining water from insulated holds.

Bilge pumping system is not intended at coping with water ingress resulting from structural or main sea water piping damage.

6.2.2 Availability of the bilge system

The bilge system is to be able to work while the other essential installations of the ship, especially the fire-fighting installations, are in service.

6.2.3 Bilge and ballast systems

The arrangement of the bilge and ballast pumping system shall be such as to prevent the possibility of water passing from the sea and from water ballast spaces into the cargo and machinery spaces, or from one compartment to another.

Provisions shall be made to prevent any deep tank having bilge and ballast connections being inadvertently flooded from the sea when containing cargo, or being discharged through a bilge pump when containing water ballast.

6.3 Design of bilge systems

6.3.1 General

a) The bilge pumping system is to consist of pumps connected to a bilge main line so arranged as to allow the draining of all spaces mentioned in [6.2.1] through bilge branches, distribution boxes and bilge suctions, except for some small spaces where individual suctions by means of hand pumps may be accepted as stated in [6.6.3] and [6.6.4].

b) If deemed acceptable by the Society, bilge pumping arrangements may be dispensed with in specific compartments provided the safety of the ship is not impaired.

6.3.2 Number and distribution of bilge suctions

a) Draining of watertight spaces is to be possible, when the ship is on an even keel and either is upright or has a list of up to 5°, by means of at least:
   - two suctions in machinery spaces, including one branch bilge suction and one direct suction and, in addition, for spaces containing propulsion machinery, one emergency bilge suction
   - one suction in other spaces.

   See also [6.5.5].

b) Bilge suctions are to be arranged as follows:
   - wing suctions are generally to be provided except in the case of short and narrow compartments when a single suction ensures effective draining in the above conditions
   - in the case of compartments of unusual form, additional suctions may be required to ensure effective draining under the conditions mentioned in item a).

c) In all cases, arrangements are to be made such as to allow a free and easy flow of water to bilge suctions.

6.3.3 Prevention of communication between spaces Independence of the lines

a) Bilge lines are to be so arranged as to avoid inadvertent flooding of any dry compartment.

b) Bilge lines are to be entirely independent and distinct from other lines except where permitted in [5.4].

c) In ships designed for the carriage of flammable or toxic liquids in enclosed cargo spaces, the bilge pumping system is to be designed to prevent the inadvertent pumping of such liquids through machinery space piping or pumps. See also Ch 4, Sec 12, [2.6].

6.4 Draining of cargo spaces

6.4.1 General

a) Cargo holds are to be fitted with bilge suctions connected to the bilge main.

b) Drainage arrangements for cargo holds likely to be used alternatively for ballast, fuel oil or liquid or dry cargoes are to comply with [7.1].

c) Drainage of enclosed cargo spaces situated on the freeboard deck of a cargo ship and on the bulkhead deck of a passenger ship shall comply with [8.5].

d) Drainage of enclosed cargo spaces intended to carry dangerous goods (see Ch 4, Sec 12) shall be provided in accordance with Ch 4, Sec 12, [2.6].

6.4.2 Ships without double bottom

a) In ships without double bottom, bilge suctions are to be provided in the holds:
   - at the aft end in the centreline where the rise of floor exceeds 5°
   - at the aft end on each side in other cases.

b) Additional suctions may be required if, due to the particular shape of the floor, the water within the compartment cannot be entirely drained by means of the suctions mentioned in a) above.

6.4.3 Ships with double bottom

a) In ships with double bottom, bilge suctions are to be provided in the holds on each side aft. Where the double bottom plating extends from side to side, the bilge suctions are to be led to wells located at the wings. Where the double bottom plating slopes down to the centreline by more than 5°, a centreline well with a suction is also to be provided.

b) If the inner bottom is of a particular design, shows discontinuity or is provided with longitudinal wells, the number and position of bilge suctions will be given special consideration by the Society.

6.4.4 Ships with holds over 30 m in length

In holds greater than 30 m in length, bilge suctions are to be provided in the fore and aft ends.

6.4.5 Additional suctions

Additional suctions may be required in the forward part of holds in ships which are likely to navigate normally with a trim by the head.

6.4.6 Drainage of cargo spaces, other than ro-ro spaces, intended for the carriage of motor vehicles with fuel in their tanks for their own propulsion

In cargo spaces, other than ro-ro spaces, intended for the carriage of motor vehicles with fuel in their tanks for their own propulsion and fitted with a fixed pressure water-spraying fire-extinguishing system, the pumping arrangement is to be such as to prevent the build-up of free surfaces. If this is not possible, the adverse effect upon stability of the added weight and free surface of water is to be taken into account to the extent deemed necessary by the Society in its approval of the stability information. See Part B, Chapter 3.

See also [8.7].

6.4.7 Drainage of cargo spaces intended for the carriage of flammable or toxic liquids

In ships designed for the carriage of flammable or toxic liquids in enclosed cargo spaces, and where large quantities of such liquids are carried, consideration is to be given to the provision of additional means of draining such spaces. See also Ch 4, Sec 12, [2.6].

6.5 Draining of machinery spaces

6.5.1 General

Where all the propulsion machinery, boilers and main auxiliaries are located in a single watertight space, the bilge suctions are to be distributed and arranged in accordance with the provisions of [6.5.5].

6.5.2 Branch bilge suction

The branch bilge suction is to be connected to the bilge main.

6.5.3 Direct suction

The direct suction is to be led direct to an independent power bilge pump and so arranged that it can be used independently of the main bilge line.

The use of ejectors for pumping through the direct suction will be given special consideration.

6.5.4 Emergency bilge suction

a) The emergency bilge suction is to be led directly from the drainage level of the machinery space to a main circulating (or cooling) pump and fitted with a non-return valve.

b) In ships where, in the opinion of the Society, the main circulating (or cooling) pump is not suitable for this purpose, the emergency bilge suction is to be led from the largest available independent power driven pump to the drainage level of the machinery space. Such a pump is not to be a bilge pump. Its capacity when the emergency suction is operating is to be at least equal to the required capacity of each bilge pump as determined in [6.7.4].

c) The emergency bilge suction is to be located at the lowest possible level in the machinery spaces.

6.5.5 Number and distribution of suctions in propulsion machinery spaces

a) In propulsion machinery spaces, bilge suctions are to include:
- where the bottom of the space, bottom plating or top of the double bottom slope down to the centreline by more than 5°, at least two centreline suctions, i.e. one branch bilge suction and one direct suction, or
- where the bottom of the space is horizontal or slopes down to the sides and in all passenger ships, at least two suctions, i.e. one branch bilge suction and one direct suction, on each side, and
- one emergency bilge suction.

Note 1: In cargo ships, if an emergency bilge suction is arranged in accordance with [6.8.5] and connected to a self-priming pump, the direct bilge suction may be omitted on the side where the emergency suction is fitted.

b) If the tank top is of a particular design or shows discontinuity, additional suctions may be required.

c) Where the propulsion machinery space is located aft, suctions are normally to be provided on each side at the fore end and, except where not practicable due to the shape of the space, on each side at the aft end of the space.

d) In electrically propelled ships, provision is to be made to prevent accumulation of water under electric generators and motors.

6.5.6 Number and distribution of suctions in boiler and auxiliary machinery spaces

In boiler and auxiliary compartments, bilge suctions are to include:
- bilge branch suctions distributed as required in [6.4.2] to [6.4.5] for cargo holds
- one direct suction.

6.6 Draining of dry spaces other than cargo holds and machinery spaces

6.6.1 General

a) Except where otherwise specified, bilge suctions are to be branch bilge suctions, i.e. suctions connected to a bilge main.

b) Draining arrangements of tanks are to comply with the provisions of [7].

6.6.2 Draining of cofferdams

a) All cofferdams are to be provided with suction pipes led to the bilge main.

b) Where cofferdams are divided by longitudinal watertight bulkheads or girders into two or more parts, a single suction pipe led to the aft end of each part is acceptable.

6.6.3 Draining of fore and aft peaks

a) Where the peaks are not used as tanks and bilge suctions are not fitted, drainage of both peaks may be effected by hand pump suction provided that the suction lift is well within the capacity of the pump and in no case exceeds 7,3 m.

b) Except where permitted in [5.3.3], the collision bulkhead is not to be pierced below the freeboard deck.

c) For tankers, see Pt D, Ch 7, Sec 4, [2.1.4].

d) For ships intended primarily to carry dry cargo in bulk, see [6.6.7].

6.6.4 Draining of spaces above fore and aft peaks

a) Provision is to be made for the drainage of the chain lockers and watertight compartments above the fore peak tank by hand or power pump suctions.

b) Steering gear compartments or other small enclosed spaces situated above the aft peak tank are to be provided with suitable means of drainage, either by hand or power pump bilge suctions. However, in the case of rudder stock glands located below the summer load line, the bilge suctions of the steering gear compartment are to be connected to the main bilge system.

c) If the compartments referred to in b) are adequately isolated from the adjacent ‘tweendecks, they may be drained by scuppers discharging to the tunnel (or machinery space in the case of ships with machinery aft) and fitted with self-closing cocks situated in well-lighted and visible positions.

Note 1: This arrangement is not applicable to ships required to comply with [5.5], and in particular to passenger ships, unless they are specially approved in relation to subdivision.

d) For ships intended primarily to carry dry cargo in bulk, see [6.6.7].

6.6.5 Draining of tunnels

a) Tunnels are to be drained by means of suctions connected to the main bilge system. Such suctions are generally to be located in wells at the aft end of the tunnels.

b) Where the top of the double bottom, in the tunnel, slopes down from aft to forward, an additional suction is to be provided at the forward end of this space.

6.6.6 Draining of refrigerated spaces

Provision is to be made for the continuous drainage of condensate in refrigerated and air cooler spaces. To this end, valves capable of blanking off the water draining lines of such spaces are not to be fitted, unless they are operable from an easily accessible place located above the load waterline.

6.6.7 Specific requirements for drainage of forward spaces of bulk, ore and combination carriers ("dewatering system")

Unless otherwise specified, this requirement applies to ships with service notation **bulk carrier**, **bulk carrier ESP**, **ore carrier ESP**, **combination carrier /OBO ESP**, **combination carrier /OOC ESP**, **self-unloading bulk carrier ESP** as described in Pt A, Ch 1, Sec 2, [4.3].

a) The bilge of dry spaces any part of which extends forward of the foremost cargo hold, as well as the means for draining and pumping ballast tanks forward of the collision bulkhead, is to be capable of being brought into operation from a readily accessible enclosed space, the location of which is accessible from the navigation bridge or propulsion machinery control position without traversing exposed freeboard or superstructure decks. The following criteria are to govern the application of the requirement:

- a position which is accessible via an under deck passage, a pipe trunk or other similar means of access is not to be taken as being in the accessible enclosed space.
- the requirement does not apply to the enclosed spaces the volume of which does not exceed 0,1% of the ship maximum displacement volume and to the chain locker.

b) The water level detectors, giving an audible and visual alarm located on the navigation bridge, are to be fitted:

- in any ballast tank forward of the collision bulkhead, indicating when the liquid in the tank reaches a level not exceeding 10% of the tank capacity. An alarm overriding device may be installed to be activated when the tank is in use.
- in any dry or void space which is to comply with the requirements in item a), giving the alarm at a water level of 0,1 m above the deck.

c) The capacity of the dewatering system is to be designed to remove water from the forward spaces at a rate of not less than (320·A) m^3/h, where A is the cross-sectional area, in m^2, of the largest air pipe or ventilator pipe connected from the exposed deck to a closed forward space that is required to be dewatered by these arrangements.

d) When dewatering systems are in operation, the following is to be fulfilled:

- other systems essential for the safety of the ship, including fire-fighting and bilge systems, are to remain available and ready for immediate use
- it is to be possible to start fire pumps immediately and to have a ready available supply of fire-fighting water
- the systems for normal operation of electric power supplies, propulsion and steering are not to be affected by this operation.

e) The drainage arrangements are to be such that:

- any accumulated water can be drained directly by a pump or an eductor
- it may be possible to configure and use bilge system for any compartment when the drainage system is in operation
- remotely operated valves within the system comply with [2.7.3]
- bilge wells are protected by gratings or strainers to prevent blockage of the drainage system with debris.

f) Where pipes serving such tanks or bilge pierce the collision bulkhead, valve operation by means of remotely operated actuators may be accepted as an alternative to the valve control required in [5.3.3], provided that the location of such valve controls complies with [5.3.3]. For that purpose, the following is to be fulfilled:

- the valve required in [5.3.3] is to be capable of being controlled from the position as required in item a)
- the valve is not to move from the demanded position in the case of failure of the control system power or actuator power
- positive indication is to be provided at the remote control station to show that the valve is fully open or closed
- in addition, the local hand powered valve operation from above the freeboard deck is also to be provided.

g) The piping arrangements for drainage of closed dry spaces may be connected to the piping arrangements for drainage of water ballast tanks, provided that:

- two non-return valves are provided to prevent the ingress of water into dry spaces from those intended for the carriage of water ballast
- the non-return valves are located in readily accessible positions
- one of these non-return valves is fitted with shut-off isolation arrangement
- the shut-off isolation arrangement is capable of being controlled from the position as required in item a).

h) The enclosures of electrical equipment for the dewatering system installed in any of the forward dry spaces are to be in accordance with requirements given in Ch 2, Sec 3, [4.1.5].

6.7 Bilge pumps

6.7.1 Number and arrangement of pumps

a) For cargo ships, at least two power pumps connected to the main bilge system are to be provided, one of which may be driven by the propulsion machinery.

b) Additional requirements for passenger ships are given in Part D.

c) Each pump may be replaced by a group of pumps connected to the bilge main, provided their total capacity meets the requirements specified in [6.7.4].

d) Alternative arrangements, such as the use of a hand pump in lieu of a power pump, will be given special consideration by the Society.

6.7.2 Use of ejectors

One of the pumps may be replaced by a hydraulic ejector connected to a high pressure water pump and capable of ensuring the drainage under similar conditions to those obtained with the other pump.

On passenger ships, the pump supplying the ejector is not to be used for other services.

6.7.3 Use of other pumps for bilge duties

a) Other pumps may be used for bilge duties, such as fire, general service, sanitary service or ballast pumps, provided that:

- they meet the capacity requirements
- suitable piping arrangements are made
- pumps are available for bilge duty when necessary.

b) The use of bilge pumps for fire duty is to comply with the provisions of Ch 4, Sec 6.

6.7.4 Capacity of the pumps

a) Each power bilge pump is to be capable of pumping water through the required main bilge pipe at a speed of not less than 2 m/s.

b) The capacity of each pump or group of pumps is not to be less than:

$Q = 0{,}00565\ d^2$

where:

Q : Minimum capacity of each pump or group of pumps, in m^3/h

d : Internal diameter, in mm, of the bilge main as defined in [6.8.1].

Note 1: For cargo ships of less than 35 m in length:

- the speed of water to be considered for calculating the capacity may be reduced to 1,22 m/s
- the capacity of each pump or group of pumps is not to be less than $Q = 0{,}00345\ d^2$.

c) If the capacity of one of the pumps or one of the groups of pumps is less than the Rule capacity, the deficiency may be compensated by an excess capacity of the other pump or group of pumps; as a rule, such deficiency is not permitted to exceed 30% of the Rule capacity.

Note 2: This provision does not apply to passenger ships.

d) The capacity of hand pumps is to be based on one movement once a second.

e) Where an ejector is used in lieu of a driven pump, its suction capacity is not to be less than the required capacity of the pump it replaces.

6.7.5 Choice of the pumps

a) Bilge pumps are to be of the self-priming type. Centrifugal pumps are to be fitted with efficient priming means, unless an approved priming system is provided to ensure the priming of pumps under normal operating conditions.

b) Circulating or cooling water pumps connected to an emergency bilge suction need not be of the self-priming type.

c) Sanitary, ballast and general service pumps may be accepted as independent power bilge pumps if fitted with the necessary connections to the bilge pumping system.

d) Hand pumps are to have a maximum suction height not exceeding 7,30 m and to be operable from a position located above the load waterline.

6.7.6 Connection of power pumps

a) Bilge pumps and other power pumps serving essential services which have common suction or discharge are to be connected to the pipes in such a way that:
   - compartments and piping lines remain segregated in order to prevent possible intercommunication
   - the operation of any pump is not affected by the simultaneous operation of other pumps.

b) The isolation of any bilge pump for examination, repair or maintenance is to be made possible without impeding the operation of the remaining bilge pumps.

6.7.7 Electrical supply of submersible pump motors

a) Where submersible bilge pumps are provided, arrangements are to be made to start their motors from a convenient position above the bulkhead deck.

b) Where an additional local-starting device is provided at the motor of a permanently installed submersible bilge pump, the circuit is to be arranged to provide for the disconnection of all control wires therefrom at a position adjacent to the starter installed on the deck.

6.8 Size of bilge pipes

6.8.1 Bilge main line

a) The diameter of the bilge main is to be calculated according to the following formula:

$$d = 25 + 1{,}68\sqrt{L(B + D)}$$

where:

d : Internal diameter of the bilge main, in mm

L and B : Length and breadth of the ship as defined in Pt B, Ch 1, Sec 3, in m

D : Moulded depth of the ship to the bulkhead deck, in m, provided that, in a ship having an enclosed cargo space on the bulkhead deck which is internally drained in accordance with the requirements of [8.5.3] and which extends for the full length of the ship, D is measured to the next deck above the bulkhead deck. Where the enclosed cargo spaces cover a lesser length, D is to be taken as the moulded depth to the bulkhead deck plus l·h/L where l and h are the aggregate length and height, respectively, of the enclosed cargo spaces, in m.

Note 1: In cargo ships fitted with side ballast tanks forming a double hull on the whole length of the holds, the diameter of the bilge main may be determined by introducing the actual breadth of the holds amidships as B in the above formula. For the part of bilge main serving the suctions to machinery spaces, the cross-section is not to be less than twice the cross-sections resulting from [6.8.3], item a) for branch bilge suctions to those machinery spaces and need not exceed that of the bilge main resulting from the above formula.

b) In no case is the actual internal diameter to be:
   - more than 5 mm smaller than that obtained from the formula given in a), or
   - less than 60 mm, or
   - less than that obtained from the formula given in [6.8.3] for branch bilge suctions.

c) For tankers, the internal diameter d of the bilge main in engine room shall be determined in accordance with Pt D, Ch 7, Sec 4, [2.2.2].

d) For cargo ships where L < 20 m and assigned with a restricted navigation notation, as well as for sailing ships with or without auxiliary engine, the bilge system will be specially considered by the Society in each particular case.

6.8.2 Distribution box branch pipes

The cross-section of any branch pipe connecting the bilge main to a bilge distribution box is not to be less than the sum of the cross-sections required for the two largest branch suctions connected to this box. However, this cross-section need not exceed that of the bilge main.

6.8.3 Branch bilge suction pipes

a) The internal diameter, in mm, of pipes situated between distribution boxes and suctions in holds and machinery spaces is not to be less than the diameter given by the following formula:

$$d_1 = 25 + 2{,}16\sqrt{L_1(B + D)}$$

where:

B and D : as defined in [6.8.1]

L_1 : Length of the compartment, in m.

d_1 is not to be less than 50 mm and need not exceed 100 mm.

b) For ships other than passenger ships, which have side ballast tanks forming a double hull, the diameter of suction pipes in holds may be determined by introducing as B the actual breadth of the holds amidships.

6.8.4 Direct suctions other than emergency suctions

a) Direct suctions are to be suitably arranged and those in a machinery space are to be of a diameter not less than that required for the bilge main.

b) In cargo ships having separate machinery spaces of small dimensions, the size of the direct suctions need not exceed that given in [6.8.3] for branch bilge suctions.

6.8.5 Emergency suctions in machinery spaces

a) The diameter of emergency bilge suction pipes is to be:
- at least two thirds of the diameter of the pump inlet in the case of steamships
- the same as the diameter of the pump inlet in the case of motorships.

b) Where the emergency suction is connected to a pump other than a main circulating or cooling pump, the suction is to be the same diameter as the main inlet of the pump.

6.8.6 Bilge suctions from tunnels

Bilge suction pipes to tunnel wells are not to be less than 65 mm in diameter. In ships up to 60 metres in length, this diameter may be reduced to 50 mm.

6.8.7 Scuppers in aft spaces

Any scupper provided for draining aft spaces and discharging to the tunnel is to have an internal diameter not less than 35 mm.

6.8.8 Bilge for small ships

For cargo ships of a length L, as defined in [6.8.1], less than 20 m and assigned with a restricted navigation notation, as well as for sailing ships with or without auxiliary engine, the bilge system will be specially considered by the Society in each single case.

6.8.9 Bilge main for tankers

In tankers and other ships where the bilge pumps are designed to pump from the machinery space only, the internal diameter d, in mm, of the bilge main may be less than that required by the formula in [6.8.1] above, but it is to be not less than that obtained from the formula specified in Pt D, Ch 7, Sec 4.

6.9 Bilge accessories

6.9.1 Drain valves on watertight bulkheads

a) The fitting of drain valves or similar devices is not allowed on the collision bulkhead.

b) On other watertight bulkheads, the fitting of drain valves or similar devices is allowed unless practical alternative draining means exist. Such valves are to be easily accessible at all times and operable from above the freeboard deck. Means indicating whether the valves are open or closed are to be provided.

6.9.2 Screw-down non-return valves

a) Accessories are to be provided to prevent intercommunication of compartments or lines which are to remain segregated from one another. For this purpose, non-return devices are to be fitted:
- on the pipe connections to bilge distribution boxes or to the alternative valves, if any
- on direct and emergency suctions in machinery spaces
- on the suctions of pumps which also have connections from the sea or from compartments normally intended to contain liquid
- on flexible bilge hose connections
- on the suctions of water bilge ejectors
- at the open end of bilge pipes passing through deep tanks
- in compliance with the provisions for the prevention of progressive flooding, if applicable.

b) Screw-down and other non-return valves are to be of a recognised type which does not offer undue obstruction to the flow of water.

6.9.3 Mud boxes

In machinery spaces and shaft tunnels, termination pipes of bilge suctions are to be straight and vertical and are to be led to mud boxes so arranged as to be easily inspected and cleaned.

The lower end of the termination pipe is not to be fitted with a strum box.

6.9.4 Strum boxes

a) In compartments other than machinery spaces and shaft tunnels, the open ends of bilge suction pipes are to be fitted with strum boxes or strainers having holes not more than 10 mm in diameter. The total area of such holes is to be not less than twice the required cross-sectional area of the suction pipe.

b) Strum boxes are to be so designed that they can be cleaned without having to remove any joint of the suction pipe.

6.9.5 Bilge wells

a) The wells provided for draining the various compartments are to be of a capacity not less than 0,15 m^3. In small compartments, smaller cylindrical wells may be fitted.

b) Bilge wells are to comply with the relevant provisions of Part B.

6.9.6 Liquid sealed traps

a) The bilge line of refrigerated spaces is to be provided with liquid sealed traps of adequate size arranged for easy cleaning and refilling with brine. These traps are to be fitted with removable grids intended to hold back waste products when defrosting.

b) Where drain pipes from separate refrigerated rooms join a common main, each of these pipes is to be provided with a liquid sealed trap.

c) As a general rule, liquid sealed traps are to be fitted with non-return valves. However, for refrigerated spaces not situated in the ship bottom, non-return valves may be omitted, provided this arrangement does not impair the integrity of the watertight subdivision.

6.10 Materials

6.10.1 *All bilge pipes used in or under coal bunkers or fuel storage tanks or in boiler or machinery spaces, including spaces in which oil-settling tanks or fuel oil pumping units are situated, shall be of steel or other suitable material non-sensitive to heat.*

6.11 Bilge piping arrangement

6.11.1 Passage through double bottom compartments

Bilge pipes are not to pass through double bottom compartments. If such arrangement is unavoidable, the parts of bilge pipes passing through double bottom compartments are to have reinforced thickness, as per Tab 6 for steel pipes.

6.11.2 Passage through deep tanks

The parts of bilge pipes passing through deep tanks intended to contain water ballast, fresh water, liquid cargo or fuel oil are normally to be contained within pipe tunnels. Alternatively, such parts are to have reinforced thickness, as per Tab 6 for steel pipes, and are to be made either of one piece or several pieces assembled by welding, by reinforced flanges or by devices deemed equivalent for the application considered; the number of joints is to be as small as possible. These pipes are to be provided at their ends in the holds with non-return valves.

6.11.3 Provision for expansion

Where necessary, bilge pipes inside tanks are to be fitted with expansion bends. Sliding joints are not permitted for this purpose.

6.11.4 Connections

Connections used for bilge pipes passing through tanks are to be welded joints or reinforced flange connections.

6.11.5 Access to valves and distribution boxes

All distribution boxes and manually operated valves in connection with the bilge pumping arrangement shall be in positions which are accessible under ordinary circumstances

Hand-wheels of valves controlling emergency bilge suctions are to rise at least 0,45 m above the manoeuvring floor.

6.12 Water ingress detection

6.12.1 Specific requirements for bulk, ore and combination carriers

Unless otherwise specified, the provisions of [6.12.1] apply to ships having one of the following service notations:

- **bulk carrier ESP**, **bulk carrier CSR ESP**, **bulk carrier CSR BC-A ESP**, **bulk carrier CSR BC-B ESP**, **bulk carrier CSR BC-C ESP**, **bulk carrier**, **self-unloading bulk carrier ESP**
- **ore carrier ESP**
- **combination carrier/OBO ESP** or **combination carrier/OOC ESP**.

a) Each cargo hold is to be fitted with the water level detectors, giving audible and visual alarms located on the navigation bridge, one when the water level above the inner bottom in any hold reaches a height of 0,5 m and another at a height not less than 15% of the depth of the cargo hold but not more than 2 m.

b) The water level detectors (see Note 1) are to be fitted in the aft end of the cargo holds. For cargo holds which are used for water ballast, an alarm overriding device may be installed. The visual alarms are to clearly discriminate between the two different water levels detected in each hold.

Note 1: Refer to the Performance standards for water level detectors on bulk carriers and single hold cargo ships other than bulk carriers (IMO Resolution MSC.188(79) Rev.2).

c) Relevant documentation and drawings are to be submitted for review, including at least:
- type approval of Water Ingress Detection System, i.e. sensors/detectors wiring and control panel
- general arrangement of sensors and cables
- power supply electrical diagram
- detailed installation drawing of a sensor
- copy of the DOC of compliance for the carriage of dangerous goods and BC Code attestation, if any.

6.12.2 Specific requirements for single hold cargo ships other than bulk carriers

Unless otherwise specified, the provisions of [6.12.2] apply to ships having a length L of less than 80 m and 500 GT and over, with the service notation **general cargo ship** (see Note 1), **cement carrier**, **container ship**, **ro-ro cargo ship**, **PCTC** (see Note 2), **PCC** (see Note 2), **refrigerated cargo ship**, **livestock carrier**, **deck ship** (see Note 2), **liquefied gas carrier** (with independent tanks) (see Note 2) or **supply** (see Note 2).

a) Ships with a single cargo hold below the freeboard deck, or with cargo holds below the freeboard deck which are not separated by at least one bulkhead made watertight up to the freeboard deck, are to be fitted with water level detectors, giving audible and visual alarms located on the navigation bridge, one when the water level above the inner bottom reaches a height of not less than 0,3 m and another at a height not more than 15% of the mean depth of the cargo hold.

b) The water level detectors (see [6.12.1], Note 1) are to be fitted in the aft end of the cargo hold or above its lowest part where the inner bottom is not parallel to the designed waterline. Where webs or partial watertight bulkheads are fitted above the inner bottom, the Society may require the fitting of additional detectors. The visual alarms are to clearly discriminate between the two different water level detectors in hold.

c) The water level detectors need not to be fitted in ships complying with the requirements in [6.12.1] or in ships having watertight side compartments each side of the cargo hold length extending vertically at least from the inner bottom to the freeboard deck.

d) Relevant documentation and drawings are to be submitted for review, including at least:
- type approval of Water Ingress Detection System, i.e. sensors/detectors wiring and control panel
- general arrangement of sensors and cables
- power supply electrical diagram
- detailed installation drawing of a sensor
- copy of the DOC of compliance for the carriage of dangerous goods and BC Code attestation, if any.

Note 1: The requirements also apply to dedicated forest product carriers, dedicated woodchip carriers, timber and log carriers, with the same conditions.

Note 2: The scope of application for this type of ships is subject to special consideration.

6.12.3 Specific requirements for multiple hold cargo ships other than bulk carriers and tankers

Unless otherwise specified, the provisions of [6.12.3] apply to multiple hold cargo ships of 500 GT and over having the service notation **general cargo ship** (see Note 1), **cement carrier**, **container ship**, **ro-ro cargo ship**, **PCTC** (see Note 2), **PCC** (see Note 2), **refrigerated cargo ship**, **livestock carrier**, **deck ship** (see Note 2) or **supply** (see Note 2).

a) Water level detectors (see [6.12.1], Note 1) are to be fitted in each cargo hold intended for dry cargoes. Water level detectors are not required for cargo holds located entirely above the freeboard deck.

b) The water level detectors required by item a) are to:

1) give audible and visual alarms at the navigation bridge, one when the water level above the bottom of the cargo hold reaches a height of not less than 0,3 m, and another at a height not less than 15% of the depth of the cargo hold but not more than 2 m; and

2) be fitted at the aft end of the cargo holds. For cargo holds which are occasionally used for water ballast, an alarm overriding device may be installed. The visual alarms shall clearly discriminate between the two different water levels detected in each hold.

c) As an alternative to the water level detector at a height of not less than 0,3 m as per item b)1), a bilge level sensor (see [6.12.1], Note 1) serving the bilge pumping arrangements required by [6.2] to [6.11] and installed in the cargo hold bilge wells or other suitable location is considered acceptable, subject to:

1) the fitting of the bilge level sensor at a height of not less than 0,3 m at the aft end of the cargo hold; and

2) the bilge level sensor giving audible and visual alarm at the navigation bridge which is clearly distinctive from the alarm given by the other water level detector fitted in the cargo hold.

d) Relevant documentation and drawings are to be submitted for review, including at least:
- type approval of water detectors, including sensor wiring and control panel
- general arrangement of sensors and cables
- power supply electrical diagram
- detailed installation drawing of sensors
- copy of the document of compliance for the carriage of dangerous goods (DoC) and BC Code attestation, if any.

Note 1: The requirements also apply to dedicated forest product carriers, dedicated woodchip carriers, timber and log carriers, with the same conditions.

Note 2: The scope of application for this type of ships is subject to special consideration.

7 Ballast systems

7.1 Principles

7.1.1 Independence of ballast lines

Ballast lines are to be entirely independent and distinct from other lines except where permitted in [5.4].

7.1.2 Prevention of undesirable communication between spaces or with the sea

Ballast systems in connection with bilge systems are to be so designed as to avoid any risk of undesirable communication between spaces or with the sea. See [6.2.3].

7.1.3 Alternative carriage of ballast water or other liquids and dry cargo

Holds and deep tanks designed for the alternative carriage of water ballast, fuel oil or dry cargo are to have their filling and suction lines provided with blind flanges or appropriate change-over devices to prevent any mishandling.

7.1.4 Ballast water management systems

In addition to the requirements contained in BWM Convention (2004) and the Code for Approval of Ballast Water Management Systems (BWMS Code), ballast water management systems (BWMS), where fitted, are to comply with the requirements of Ch 1, Sec 13.

7.2 Ballast pumping arrangement

7.2.1 Filling and suction pipes

a) All tanks including aft and fore peak and double bottom tanks intended for ballast water are to be provided with suitable filling and suction pipes connected to special power driven pumps of adequate capacity.

b) Small tanks used for the carriage of domestic fresh water may be served by hand pumps.

c) Suctions are to be so positioned that the transfer of sea water can be suitably carried out in the normal operating conditions of the ship. In particular, two suctions may be required in long compartments.

d) On bulk carriers, the means for draining and pumping ballast tanks forward of the collision bulkhead are to comply with [6.6.7].

7.2.2 Pumps

At least two power driven ballast pumps are to be provided, one of which may be driven by the propulsion unit. Sanitary and general service pumps may be accepted as independent power ballast pumps.

Bilge pumps may be used for ballast water transfer provided the provisions of [6.7.3] are fulfilled.

Alternative means of deballasting, such as an eductor, may be accepted in lieu of a second ballast pump, subject to special consideration in each particular case.

7.2.3 Passage of ballast pipes through tanks

If not contained in pipe tunnels, the ballast steel pipes passing through tanks intended to contain fresh water, fuel oil or liquid cargo are:
- to have reinforced thickness, as per Tab 6
- to consist either of a single piece or of several pieces assembled by welding, by reinforced flanges or by devices deemed equivalent for the application considered
- to have a minimal number of joints in these lines
- to have expansion bends in these lines within the tank, where needed
- not to have slip joints.

For ballast lines passing through oil cargo tanks, where permitted, see Pt D, Ch 7, Sec 4, [2.1.3].

7.2.4 Ballast valves and piping arrangements

a) Ballast tank valves

Valves controlling flow to ballast tanks are to be arranged so that they remain closed at all times except when ballasting. Where butterfly valves are used, they are to be of a type able to prevent movement of the valve position due to vibration or flow of fluids.

b) Remote control valves

Remote control valves, where fitted, are to be arranged so that they close and remain closed in the event of loss of control power. The valves may remain in the last ordered position upon loss of power, provided that there is a readily accessible manual means to close the valves upon loss of power.

Remote control valves are to be clearly identified as to the tanks they serve and are to be provided with position indicators at the ballast control station.

c) Ballast piping arrangements

For ships which are subject to damage stability, the piping arrangements are to comply with the requirements of [5.5] concerning the prevention of progressive flooding. The pipes, if damaged, which are located within the extent of assumed damage, are not to affect damage stability considerations.

7.2.5 Temporary storage of treated sewage or grey water in ballast water tanks

The temporary storage of treated sewage and grey water in ballast water tanks is allowed under the following conditions:

a) Mixing ballast water and treated sewage or grey water is not permitted.

b) Ballast water tanks intended for temporary the storage of treated sewage or grey water are to be adequately protected against corrosion considering the fluids to be stored.

c) Hull strength and stability are to be assessed in regards of ships operation while the BW are used for temporary storage of grey water or treated sewage: see Pt B, Ch 5, Sec 8, [3.2.1], item d).

d) Appropriate measures to prevent the contamination of the ballast system by treated sewage or grey water are to be provided, such as valves, blanks, spectacle flanges blinds, or using isolating pumps and pipelines.

e) The ballast water tanks to be used for temporary storage of treated sewage or grey water are to be clearly identified.

f) The procedure for temporary storage of treated sewage or grey water in ballast water tanks shall be approved by the Administration in accordance with BWM.2/Circ.82."

7.3 Ballast water exchange at sea

7.3.1 General

Unless otherwise specified, this sub-article applies to ships assigned with additional class notation **BWE**.

7.3.2 Definitions

a) A Ballast Water Exchange (BWE) plan contains procedures and advice to safely and efficiently exchange of ballast water in accordance with applicable structural and stability requirements and taking into account the precautions contained in Appendix 2 of IMO Res. A. 868(20).

b) Sequential method - a process by which a ballast tank or hold intended for the carriage of water ballast is emptied of at least 95% or more of its volume and then refilled with replacement ballast water.

c) Flow-through method - a process by which replacement ballast water is pumped into a ballast tank or hold intended for the carriage of water ballast allowing water to flow through overflow or other arrangements. At least three times the tank or hold volume is to be pumped through the tank or hold.

d) Dilution method - a process by which replacement ballast water is filled through the top of the ballast tank or hold intended for the carriage of water ballast with simultaneous discharge from the bottom at the same flow rate and maintaining a constant level in the tank or hold. At least three times the tank or hold volume is to be pumped through the tank or hold.

7.3.3 Ballast water pumping and piping arrangement

a) Ballast water pumping and piping arrangements are to be capable of filling and pumping out any ballast tank and hold intended for the carriage of water ballast under any environmental conditions permitted by the Ballast Water Exchange (BWE) plan.

b) Where the flow-through method of water ballast exchange is used, the design of water ballast exit arrangements is to be such that, when the tank or hold is overflowing at the maximum pumping capacity available to the tank or hold, it is not subject to a pressure greater than that for which it has been designed.

c) Every ballast tank and hold intended for the carriage of water ballast is to be provided with isolating valves for filling and /or emptying purposes.

d) On ships classed for navigation in ice, ship side ballast discharge valves placed above the assigned lightest load line are to be arranged with adequate heating arrangements.

7.3.4 Sea chests and shipside openings intended for ballast water exchange

The relative positions of ballast water intake and discharge openings are to be such as to preclude as far as practicable the possibility of contamination of replacement ballast water by water which is being pumped out.

7.3.5 Pumps

a) The ballast system is to be served by at least two pumps.

b) The complete ballast water exchange of cargo holds, where used for the carriage of water ballast, is to be possible by one pump within not more than twenty four hours.

7.3.6 System arrangement

a) The design of ballast water systems is to allow the ballast water exchange operations with the minimum number of operational procedures.

b) The internal arrangements of ballast tanks, as well as ballast water piping inlet and outlet arrangements, are to allow, as far as practical, the complete ballast water exchange and the clearing of any sediments.

c) The design of sea suction line strainers is to be such as to permit cleaning of strainers without interrupting ballast water exchange procedures.

7.3.7 Control features

a) Remote control, local control, emergency control
   - Remote control - ballast pumps, and all valves which may be operated during ballast water exchange are to be provided with a means of remote control from a central ballast control station.
   - Local control - a means of local control is to be provided at each ballast pump operated during ballast water exchange.
   - Emergency control - a readily accessible manual means for control of any valve required for ballast water exchange is to be also provided to enable the emergency operation in the event of main control system failure (see also [7.2.4], item b)).

b) The central ballast control station is to include the following:
   - a valve position indicating system,
   - a tank level indicating system,
   - a draft indicating system,
   - a means of communication between the central ballast control station and those spaces containing the means of local control for the ballast pumps and the manually operated independent means of control for the valves.

c) The ballast pump and ballast valve control systems are to be so arranged that the failure of any component within the control system is not to cause the loss of operation to the pumps or valves of other systems.

7.3.8 Tanks

a) For ships with an **ICE** or **COLD** class notation (as defined in Pt A, Ch 1, Sec 2, [6.10]) and, generally, where a risk of water ballast freezing exists, water ballast tanks are to be provided with means to prevent the water from freezing. See Pt F, Ch 8, Sec 1, [2.2.2] and Pt F, Ch 8, Sec 4, [6.3.3].

b) The design of ballast tanks is to allow ready sampling of ballast water and sediments, as far as practical. Providing safe access to the tanks by the fitting of tank hatches as an alternative to manholes is recommended. The area immediately below any tank opening is to be free in order to enable the use of sampling equipment or free access.

7.3.9 Special provisions depending on the method of ballast water exchange

a) Flow-through method
   - The capability of the ballast water system to provide ballast water exchange by the flow-through method without the risk of the tank being subject to a pressure greater than that for which it has been designed is to be demonstrated by water flow calculations and by testing on board. Subject to consideration in each particular case, the calculation may be omitted where justified that total cross-sectional area of all vent pipes fitted to the tank is not less than twice the sectional area of the related filling pipes.
   - The flow-through method with water flowing over the deck is not permitted. The use of collecting pipes, internal overflow pipes or interconnecting pipe/trunk arrangements between tanks may be accepted to avoid water flowing over the deck.

b) Dilution method
   - Where the dilution method is accepted, arrangements are to be made to automatically maintain the ballast water level in the tanks at a constant level. These arrangements are to include the provision of a manual emergency stop for any operating ballast pump, in case of valve malfunction or incorrect control actions.
   - High and low water level alarms are to be provided where maintaining a constant level in a tank is essential to the safety of the ship during ballast water exchange.

8 Scuppers and sanitary discharges

8.1 Application

8.1.1

a) This Article applies to:
- scuppers and sanitary discharge systems, and
- discharges from sewage tanks.

b) Discharges in connection with machinery operation are dealt with in [2.8].

Note 1: Arrangements not in compliance with the provisions of this Article may be considered for the following ships:
- ships of less than 24 m in length
- cargo ships of less than 500 gross tonnage
- ships to be assigned restricted navigation notations
- non-propelled units.

8.2 Principle

8.2.1

a) Scuppers, sufficient in number and suitable in size, are to be provided to permit the drainage of water likely to accumulate in the spaces which are not located in the ship's bottom.

b) The number of scuppers and sanitary discharge openings in the shell plating is to be reduced to a minimum either by making each discharge serve as many as possible of the sanitary and other pipes, or in any other satisfactory manner.

c) Except otherwise specified, the design of scuppers and sanitary discharges shall generally comply with the 2004 edition of ISO 15749-1 to -5. Other recognised national or international standard acceptable to the Society may be studied on a case by case basis.

8.3 Drainage from spaces below the freeboard deck or within enclosed superstructures and deckhouses on the freeboard deck

8.3.1 Normal arrangement

Scuppers and sanitary discharges from spaces below the freeboard deck or from within superstructures and deckhouses on the freeboard deck fitted with doors complying with the provisions of Pt B, Ch 11, Sec 7 are to be led to:
- the bilge in the case of scuppers, or
- suitable sanitary tanks in the case of sanitary discharges.

8.3.2 Alternative arrangement

The scuppers and sanitary discharges may be led overboard provided that:
- the spaces drained are located above the load waterline formed by a 5° heel, to port or starboard, at a draft corresponding to the assigned summer freeboard, and
- the pipes are fitted with efficient means of preventing water from passing inboard in accordance with [8.8]

8.4 Drainage of superstructures or deckhouses not fitted with efficient weathertight doors

8.4.1 Scuppers leading from superstructures or deckhouses not fitted with doors complying with the requirements of Pt B, Ch 11, Sec 7 are to be led overboard.

8.5 Drainage of enclosed cargo spaces situated on the bulkhead deck or on the freeboard deck

8.5.1 General

Means of drainage are to be provided for enclosed cargo spaces situated on the bulkhead deck of a passenger ship and on the freeboard deck of a cargo ship. The Society may permit the means of drainage to be dispensed with in any particular compartment if it is satisfied that, by reason of size or internal subdivision of such space, the safety of the ship is not impaired.

8.5.2 Cases of spaces located above the waterline resulting from a 5° heel

a) Scuppers led through the shell from enclosed superstructures used for the carriage of cargo are permitted, provided the spaces drained are located above the waterline resulting from a 5° heel to port or starboard at a draught corresponding to the assigned summer freeboard. Such scuppers are to be fitted in accordance with the requirements stated in [8.8].

b) In other cases, the drainage is to be led inboard in accordance with the provisions of [8.5.3].

8.5.3 Cases where the bulkhead or freeboard deck edge is immersed when the ship heels 5° or less

Where the freeboard is such that the edge of the bulkhead deck or the edge of the freeboard deck, respectively, is immersed when the ship heels 5° or less, the drainage of the enclosed cargo spaces on the bulkhead deck or on the freeboard deck,

respectively, is to be led to a suitable space, or spaces, of appropriate capacity, having a high water level alarm and provided with suitable arrangements for discharge overboard.

In addition, it is to be ensured that:

- the number, size and arrangement of the scuppers are such as to prevent unreasonable accumulation of free water - see also [8.7]
- the pumping arrangements take account of the requirements for any fixed pressure water-spraying fire-extinguishing system - see also [8.7]
- water contaminated with petrol or other dangerous substances is not drained to machinery spaces or other spaces where sources of ignition may be present, and
- where the enclosed cargo space is protected by a carbon dioxide fire-extinguishing system, the deck scuppers are fitted with means to prevent the escape of the smothering gas.

8.6 Drainage of cargo spaces, other than ro-ro spaces, intended for the carriage of motor vehicles with fuel in their tanks for their own propulsion

8.6.1 Prevention of build-up of free surfaces

In cargo spaces, other than ro-ro spaces, intended for the carriage of motor vehicles with fuel in their tanks for their own propulsion and fitted with a fixed pressure water-spraying fire-extinguishing system, the drainage arrangement is to be such as to prevent the build-up of free surfaces. If this is not possible, the adverse effect upon stability of the added weight and free surface of water are to be taken into account to the extent deemed necessary by the Society in its approval of the stability information. Refer to Pt B, Ch 3, Sec 3.

8.6.2 Scupper draining

Scuppers from cargo spaces, other than ro-ro spaces, intended for the carriage of motor vehicles with fuel in their tanks for their own propulsion are not to be led to machinery spaces or other places where sources of ignition may be present.

8.7 Drainage and pumping arrangements for vehicle, special category and ro-ro spaces protected by fixed pressure water-spraying systems

8.7.1 When fixed pressure water-spraying fire-extinguishing systems are fitted, in view of the serious loss of stability which could arise due to large quantities of water accumulating on the deck or decks during the operation of the fixed pressure water-spraying system, the following arrangements shall be provided.

8.7.2 In cargo ships, the drainage and pumping arrangements shall be such as to prevent the build-up of free surfaces. In such case, the drainage system shall be sized to remove no less than 125% of the combined capacity of both the water-spraying system pumps and the required number of fire hose nozzles, taking into account IMO Circular MSC.1/Circ.1320. The drainage system valves shall be operable from outside the protected space at a position in the vicinity of the extinguishing system controls. Bilge wells shall be of sufficient holding capacity and shall be arranged at the side shell of the ship at a distance from each other of not more than 40 m in each watertight compartment. If this is not possible, the adverse effect upon stability of the added weight and free surface of water shall be taken into account to the extent deemed necessary by the Society in its approval of the stability information. Such information shall be included in the stability information supplied to the master as required in Pt B, Ch 3, Sec 2, [1.1.1].

8.7.3 For passenger ships, refer to Pt D, Ch 11, Sec 4, [1.6].

8.7.4 For closed vehicles and ro-ro spaces and special category spaces, where fixed pressure water-spraying systems are fitted, means shall be provided to prevent the blockage of drainage arrangements, taking into account IMO Circular MSC.1/Circ.1320.

8.8 Arrangement of discharges led overboard

8.8.1 Arrangements for discharges led from spaces below the bulkhead or freeboard deck

a) Normal arrangement:

Each separate discharge led though the shell plating from spaces below the bulkhead or freeboard deck is to be provided with one automatic non-return valve fitted with positive means of closing it from above the bulkhead or freeboard deck or.

b) Alternative arrangement when the inboard end of the discharge pipe is above the summer waterline by more than 0,01 L:

Where the vertical distance from the summer load waterline to the inboard end of the discharge pipe exceeds 0,01 L, the discharge may have two automatic non-return valves without positive means of closing, provided that the inboard valve is:

- above the deepest subdivision load line, and
- always accessible for examination under service conditions.

c) For SOLAS ships, no other alternative arrangement as those described above is accepted except for discharges led from the shell plating from spaces above the bulkhead or freeboard deck and those as provided in e).

d) For NON SOLAS ships:

1) The provisions of this sub-article are applicable only to those discharges which remain open during the normal operation of a ship. For discharges which must necessarily be closed at sea, such as gravity drains from topside ballast tanks, a single screw-down valve operated from the deck may be accepted.

2) The position of the inboard end of discharges is related to the timber summer load waterline when a timber freeboard is assigned.

3) Alternative arrangement when the inboard end of the discharge pipe is above the summer waterline by more than 0,01 L:

Where the vertical distance from the summer load waterline to the inboard end of the discharge pipe exceeds 0,01 L, the discharge may have two automatic non-return valves without positive means of closing, provided that:

- the inboard valve is above the level of the tropical load waterline so as to always be accessible for examination under service conditions, or
- where this is not practicable, a locally controlled sluice valve is interposed between the two automatic non-return valves.

4) Alternative arrangement when the inboard end of the discharge pipe is above the summer waterline by more than 0,02 L:

Where the vertical distance from the summer load waterline to the inboard end of the discharge pipe exceeds 0,02 L, a single automatic non-return valve without positive means of closing may be accepted subject to the approval of the Society.

e) Arrangement of discharges through manned machinery spaces:

Where sanitary discharges and scuppers lead overboard through the shell in way of machinery spaces, the fitting at the shell of a locally operated positive closing valve together with a non-return valve inboard may be accepted. The operating position of the valve will be given special consideration by the Society.

8.8.2 Arrangements for discharges led from other spaces

a) Scupper and discharge pipes originating at any level and penetrating the shell either more than 450 millimetres below the freeboard deck or less than 600 millimetres above the summer load waterline are to be provided with a non-return valve at the shell. Unless required by [8.8.1], this valve may be omitted if the piping is of substantial thickness, as per Tab 25.

b) Scupper and discharge pipes penetrating the shell less than 450 millimetres below the freeboard deck and more than 600 millimetres above the summer load waterline are not required to be provided with a non-return valve at the shell.

8.9 Summary table of overboard discharge arrangements

8.9.1 The various arrangements acceptable for scuppers and sanitary overboard discharges are summarised in Fig 3.

Figure 3 : Overboard discharge arrangement

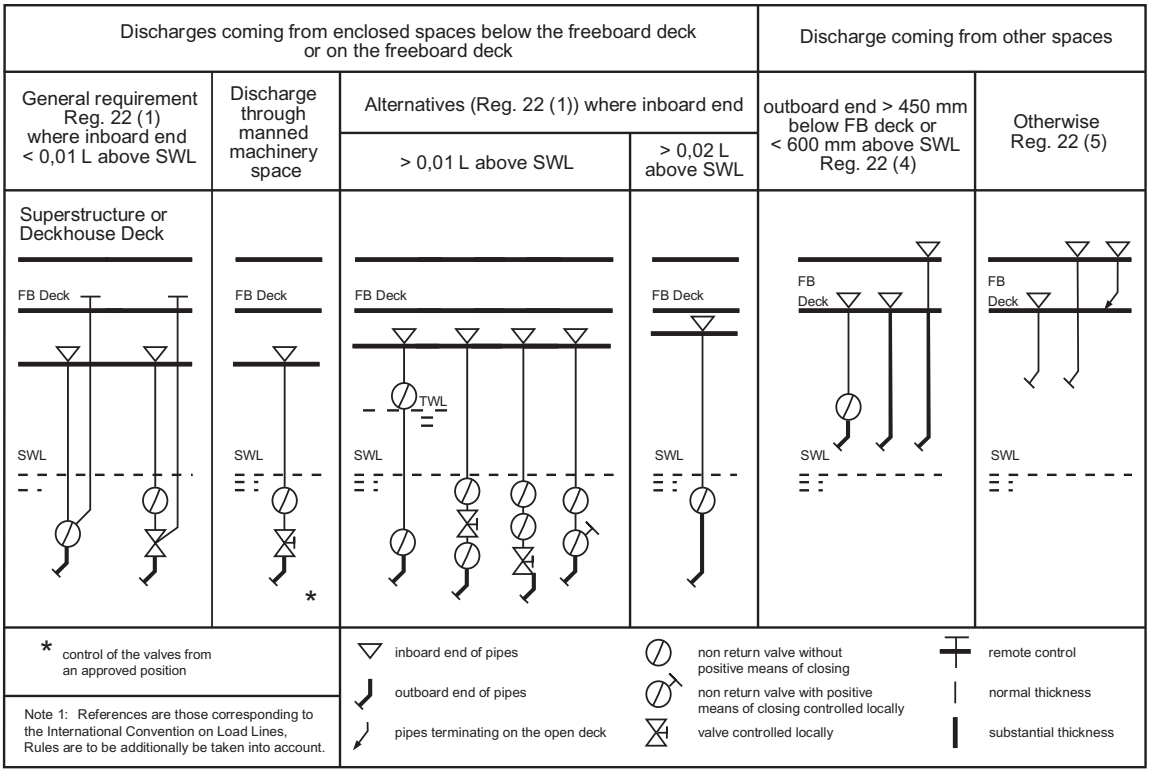

8.10 Valves and pipes

8.10.1 Materials

a) All shell fittings and valves are to be of steel, bronze or other ductile material. Valves of ordinary cast iron or similar material are not acceptable. All scupper and discharge pipes are to be of steel or other ductile material. Refer to [2.1].

b) Plastic is not to be used for the portion of discharge line from the shell to the first valve.

8.10.2 Thickness of pipes

a) The thickness of scupper and discharge pipes led to the bilge or to draining tanks is not to be less than that required in [2.2].

b) The thickness of scupper and discharge pipes led to the shell is not to be less than the minimum thickness given in Fig 3 and Tab 25.

8.10.3 Operation of the valves

a) Where valves are required to have positive means of closing, such means is to be readily accessible and provided with an indicator showing whether the valve is open or closed.

b) Where plastic pipes are used for sanitary discharges and scuppers, the valve at the shell is to be operated from outside the space in which the valve is located.

Where such plastic pipes are located below the summer waterline (timber summer load waterline), the valve is to be operated from a position above the freeboard deck.

Refer also to Ch 1, App 3.

Table 25 : Minimum thickness of scupper and discharge pipes led to the shell

External diameter of the pipe d, in mm	Substantial thickness, in mm	Normal thickness, in mm
d ≤ 80,0	7,00	4,50
155	9,25	4,50
180	10,00	5,00
220	12,50	5,80
230 ≤ d	12,50	6,00
Note 1: Intermediate sizes may be determined by interpolation.		

8.11 Arrangement of scuppers and sanitary discharge piping

8.11.1 Overboard discharges and valve connections

a) Overboard discharges are to have pipe spigots extending through the shell plate and welded to it, and are to be provided at the internal end with a flange for connection to the valve or pipe flange.

b) Valves may also be connected to the hull plating in accordance with the provisions of [2.8.3], item c).

8.11.2 Passage through cargo spaces

Where scupper and sanitary discharge pipes are led through cargo spaces, the pipes and the valves with their controls are to be adequately protected by strong casings or guards.

8.11.3 Passage through tanks

a) As a rule, scupper and sanitary discharge pipes are not to pass through fuel oil tanks.

b) Where scupper and discharge pipes pass unavoidably through fuel oil tanks and are led through the shell within the tanks, the thickness of the piping is not to be less than that given in Tab 25, column 1 (substantial thickness). It need not, however, exceed the thickness of the adjacent Rule shell plating.

c) Scupper and sanitary discharge pipes are normally not to pass through fresh and drinking water tanks.

d) For passage through cargo oil tanks, see Pt D, Ch 7, Sec 4.

8.11.4 Passage through watertight bulkheads or decks

a) The intactness of machinery space bulkheads and of tunnel plating required to be of watertight construction is not to be impaired by the fitting of scuppers discharging to machinery spaces or tunnels from adjacent compartments which are situated below the freeboard deck.

b) Such scuppers may, however, be led into a strongly constructed scupper drain tank situated in the machinery space or tunnel, but close to the above-mentioned adjacent compartments and drained by means of a suction of appropriate size led from the main bilge line through a screw-down non-return valve.

8.11.5 Discharge in refrigerated spaces

No scupper pipe from non-refrigerated spaces is to discharge in refrigerated spaces.

8.11.6 Discharge from galleys and their stores

Discharges from galleys and their stores are to be kept separate from other discharges and be drained overboard or in separate drainage tanks; alternatively, discharges are to be provided with adequate devices against odours and overflow.

8.11.7 Discharge from aft spaces

Where spaces located aft of the aft peak bulkhead not intended to be used as tanks are drained by means of scuppers discharging to the shaft tunnel, the provisions of [6.6.4] item c) are to be complied with.

8.11.8 Scupper tank

a) The scupper tank air pipe is to be led to above the freeboard deck.

b) Provision is to be made to ascertain the level of water in the scupper tank.

8.11.9 Drains from the funnels

Drain line from the funnel or stack top should not terminate on an exposed deck owing to the soot that may be contained in the wastewater. Except otherwise specified, this line may be connected to other lines draining exposed decks and leading directly overboard, taking into consideration the quantity of wastewater occurring.

8.11.10 Sewage and grey water discharges

The requirements specified below are general and should apply to any ship fitted with sewage and grey water piping systems. They are not sufficient for the compliance with MARPOL Annex IV and for additional class notation **CLEANSHIP**. Furthermore, the National Authority of the country in which the ship is to be registered may also have additional requirements.

a) Except otherwise specified, the sewage (or black water) means:

- drainage and other wastes from any form of toilets and urinals
- drainage from medical premises (dispensary, sick bay, etc.) via wash basins, wash tubs and scuppers located in such premises
- drainage from spaces containing living animals; or
- other waste waters when mixed with the drainages defined above.

b) Grey water means other sanitary discharges which are not sewage.

c) In general, sewage systems should be of a design which will avoid the possible generation of toxic and flammable gases (such as hydrogen sulphide, methane, ammonia) during the sewage collection and treatment. Additional means of protection is to be suitable ventilation of the pipework and tanks.

d) Drain lines from the hospital area should be, as far as practicable, separated from other discharges and fitted to the drain collector at the lowest level.

e) Sewage and grey water may be collected into storage tanks together or separately, either for holding prior to transfer to a treatment unit, or for later discharge. Any tank used for holding sewage shall comply with the following:

- suitable air pipes shall be fitted, leading to the open deck
- design and configuration of those tanks should be such as to facilitate the effective drainage and flushing of the tanks
- suitable means for flushing of the tanks shall be provided
- such tanks are to be efficiently protected against corrosion
- tanks shall have a means to indicate visually the amount of its content
- suitable means for emptying sewage tanks through the standard discharge connection to reception facilities shall be provided. Ballast and bilge pumps are not be used for that purpose.

f) Air pipes from the sewage and grey water systems are to be independent of all other air pipes and to be led to the outside of the ship, away from any air intake. Sewage pipes should not terminate in areas to which personnel have frequent access and should be clear of any sources of ignition.

g) The overboard discharges shall be located as far from seawater inlets as possible, seen in the direction of travel. In general, the sewage outlets should be located below the summer loadline.

h) The sewage and grey water discharge lines are to be fitted at the ships' side with screw-down valve and non-return valve. Possible characteristically arrangement is shown on Fig 4.

The non-return valve may be omitted where a pipe loop is fitting on discharge line, provided that the lowest part of the loop is at least 200 mm above the waterline with the ship on summer loadline draft and when the ship has a 5° list (see Fig 5).

Figure 4 : Sewage and grey water overboarddischarge typical arrangement

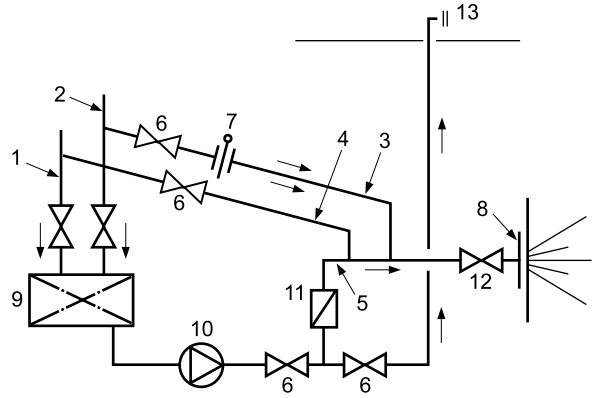

1 grey water drain line	2 sewage water drain line	3 bypass line for sewage	4 bypass line for grey water
5 sewage disposal line	6 shutoff gate valve	7 spectacle flange, optional	8 overboard discharge
9 collector tank or treatment unit	10 pump	11 non-return valve	12 screw-down overboard valve
13 standard discharge connection			

Figure 5 : Typical overboard discharge arrangement without non-return valve

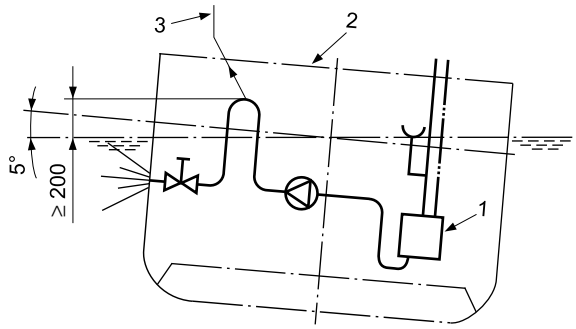

1 collector tank or treatment unit 2 freeboard deck 3 vent (leading on top of funnel).

9 Air, sounding and overflow pipes

9.1 Air pipes

9.1.1 Principle

Air pipes are to be fitted to all tanks, double bottoms, cofferdams, tunnels and other compartments which are not fitted with alternative ventilation arrangements, in order to allow the passage of air or liquid so as to prevent excessive pressure or vacuum in the tanks or compartments, in particular in those which are fitted with piping installations. Their open ends are to be so arranged as to prevent the free entry of sea water in the compartments.

9.1.2 Number and position of air pipes

a) Air pipes are to be so arranged and the upper part of compartments so designed that air or gas likely to accumulate at any point in the compartments can freely evacuate.

b) Air pipes are to be fitted opposite the filling pipes and/or at the highest parts of the compartments, the ship being assumed to be on an even keel.

c) In general, two air pipes are to be fitted for each compartment, except in small compartments, where only one air pipe may be accepted. When the top of the compartment is of irregular form, the position of air pipes will be given special consideration by the Society.

Note 1: Two air vents are normally required for long tanks e.g. a ballast tank in a double hull ship.

In machinery spaces, two air vents are not normally required.

d) Where only one air pipe is provided, it is not to be used as a filling pipe.

9.1.3 Location of open ends of air pipes

a) Air pipes of double bottom compartments, tunnels, deep tanks and other compartments which can come into contact with the sea or be flooded in the event of hull damage are to be led to above the bulkhead deck or the freeboard deck.

Note 1: In ships not provided with a double bottom, air pipes of small cofferdams or tanks not containing fuel oil or lubricating oil may discharge within the space concerned.

b) Air pipes of tanks intended to be pumped up are to be led to the open above the bulkhead deck or the freeboard deck.

c) Air pipes other than those of flammable oil tanks may be led to enclosed cargo spaces situated above the freeboard deck, provided that:

- overflow pipes are fitted in accordance with [9.3.4], where the tanks may be filled by pumping
- enclosed cargo spaces are fitted with scuppers discharging overboard and being capable of draining all the water which may enter through the air pipes without giving rise to any water accumulation
- suitable drainage arrangement is to be fitted below the air pipe outlet, leading to the nearest scupper
- such arrangement is not to impair integrity of fire divisions or watertight decks and bulkheads subject to the damage stability requirements.

d) In passenger ships, air pipes terminating within a superstructure which are not fitted with watertight means of closure shall be considered as unprotected openings when applying Pt B, Ch 3, App 3, [1.6.11].

e) The air pipe of the scupper tank is to be led to above freeboard deck.

f) The location of air pipes for flammable oil tanks is also to comply with [9.1.7].

9.1.4 Height of air pipes

a) The height of air pipes extending above the freeboard deck or superstructure deck from the deck to the point where water may have access below is to be at least:

- 760 mm on the freeboard deck, and
- 450 mm on the superstructure deck.

This height is to be measured from the upper face of the deck, including sheathing or any other covering, up to the point where water may penetrate inboard.

b) Where these heights may interfere with the working of the ship, a lower height may be approved, provided the Society is satisfied that this is justified by the closing arrangements and other circumstances. Satisfactory means which are permanently attached are to be provided for closing the openings of the air pipes.

c) The height of air pipes may be required to be increased on ships subject to damage stability requirements since the air pipe outlets are to be above final waterline at any damaged condition assumed by the Damage stability examination as defined in Pt B, Ch 3, App 4, [3.5.2].

d) The height of air pipes discharging through the side of the superstructure is to be at least 2,3 m above the summer load waterline.

9.1.5 Fitting of closing appliances

a) Satisfactory appliances which are permanently attached are to be provided for closing the openings of air pipes in order to prevent the free entry of water into the spaces concerned, except for pipes of tanks fitted with cross-flooding connections.

b) Automatic closing appliances are to be fitted in the following cases:

- where air pipes to ballast and other tanks extend above the freeboard or superstructure decks
- where, with the ship at its summer load waterline, the openings are immersed at an angle of heel of 40° or, at the angle of down-flooding if the latter is less than 40°
- where, as per [9.1.3] item c), air pipes terminate in enclosed spaces
- where, as per [9.1.4] item b), air pipes have a height lower than that required in [9.1.4] item a)
- and for ships assigned timber freeboard.

See also Pt B, Ch 3, Sec 2, [2.1.2] and Pt B, Ch 3, Sec 3, [3.3.2].

c) Automatic closing appliances are to be of a type approved by the Society. Requirements for type tests are given in [20.3.1].

d) For ships subject to specific buoyancy or stability requirements, the fitting of closing appliances to air pipes will be given special consideration.

e) Pressure/vacuum valves installed on cargo tanks, as per Part D, Chapter 7 and Part D, Chapter 8, can be accepted as closing appliances.

9.1.6 Design of closing appliances

a) When air pipes are required to be fitted with automatic closing devices, they are to comply with the following:

1) Air pipe automatic closing devices are to be so designed that they will withstand both ambient and working conditions, and be suitable for use at inclinations up to and including ± 40°.

2) Air pipe automatic closing devices are to be constructed to allow inspection of the closure and the inside of the casing as well as changing the seals.

3) Efficient ball or float seating arrangements are to be provided for the closures. Bars, cage or other devices are to be provided to prevent the ball or float from contacting the inner chamber in its normal state and made in such a way that the ball or float is not damaged when subjected to water impact due to a tank being overfilled.

4) Air pipe automatic closing devices are to be self-draining.

5) The clear area through an air pipe closing device in the open position is to be at least equal to the area of the inlet.

6) An automatic closing device is to:

- prevent the free entry of water into the tanks
- allow the passage of air or liquid to prevent excessive pressure or vacuum coming on the tank.

7) In the case of air pipe closing devices of the float type, suitable guides are to be provided to ensure unobstructed operation under all working conditions of heel and trim. Where side covers are provided and their function is integral to providing functions of the closing device as outlined in [9.1.6]item a) 6), they shall have a minimum wall thickness of 6 mm. If the air pipe head can meet the tightness test in [20.3.1], item a) without the side covers attached, then the side covers are not considered to be integral to the closing device, in which case a wall less than 6 mm can be acceptable for side covers.

8) The maximum allowable tolerances for wall thickness of floats is not to exceed ± 10% of thickness.

9) The inner and the outer chambers of an automatic air pipe head is to be of a minimum thickness of 6 mm.

10) Casings of air pipe closing devices are to be of approved metallic materials adequately protected against corrosion.

11) For galvanised steel air pipe heads, the zinc coating is to be applied by the hot method and the thickness is to be 70 to 100 microns.

12) For areas of the head susceptible to erosion (e.g. those parts directly subjected to ballast water impact when the tank is being pressed up, for example the inner chamber area above the air pipe, plus an overlap of 10° or more either side), an additional harder coating is to be applied. This is to be an aluminium bearing epoxy, or other equivalent, coating, applied over the zinc.

13) Closures and seats made of non-metallic materials are to be compatible with the media intended to be carried in the tank and to seawater and suitable for operating at ambient temperatures between –25°C and +85°C.

b) Where closing appliances are not of an automatic type, provision is to be made for relieving vacuum when the tanks are being pumped out. For this purpose, a hole of approximately 10 mm in diameter may be provided in the bend of the air pipe or at any other suitable position in the closing appliance.

c) Wooden plugs and trailing canvas are not permitted in position 1 or position 2, as defined in Pt B, Ch 3, Sec 2.

9.1.7 Special arrangements for air pipes of flammable oil tanks

a) Air pipes from fuel oil tanks and from thermal oil heating plants expansion tanks and thermal oil storage tanks, are to discharge to a safe position on the open deck where no danger will be incurred from issuing oil or gases.

Where fitted, wire gauze diaphragms are to be of corrosion resistant material and readily removable for cleaning and replacement. The clear area of such diaphragms is not to be less than the cross-sectional area of the pipe.

b) Air pipes of lubricating or hydraulic oil storage tanks, which are neither heated nor subject to flooding in the event of hull damage, may be led to machinery spaces, provided that in the case of overflowing the oil cannot come into contact with electrical equipment, hot surfaces or other sources of ignition.

c) The location and arrangement of vent pipes for fuel oil service, settling and lubrication oil tanks are to be such that in the event of a broken vent pipe there is no risk of ingress of seawater or rainwater.

d) Air pipes of fuel oil service, settling and lubrication oil tanks likely to be damaged by impact forces are to be adequately reinforced.

e) Where seawater or rainwater may enter fuel oil service, settling and lubrication oil tanks through broken air pipes, arrangements such as water traps with:

- automatic draining, or
- alarm for water accumulation

are to be provided.

9.1.8 Construction of air pipes

a) Where air pipes to ballast and other tanks extend above the freeboard deck or superstructure deck, the exposed parts of the pipes are to be of substantial construction, with a minimum wall thickness of at least:

- 6,0 mm for pipes of 80 mm or smaller external diameter
- 8,5 mm for pipes of 165 mm or greater external diameter,

Intermediate minimum thicknesses may be determined by linear interpolation.

b) Air pipes with height exceeding 900 mm are to be additionally supported.

c) In each compartment likely to be pumped up, and where no overflow pipe is provided, the total cross-sectional area of air pipes is not to be less than 1,25 times the cross-sectional area of the corresponding filling pipes.

d) The internal diameter of air pipes is not to be less than 50 mm, except for tanks of less than 2 m^3.

e) Air pipes from several tanks or spaces may be led into a common main line, provided that:

- the tanks or spaces are not intended for liquids which are not compatible and that the arrangement could not effect unacceptable condition for the ship
- the cross-sectional area of the air pipes main is generally not less than the aggregate cross-sectional area of the two largest pipes discharging into the main. However, a reduced value may be considered for acceptance in each particular case on the basis of back pressure calculation submitted for all normal working conditions
- as far as practical, each separate air pipe is fitted to the common air pipe from the top side
- where no overflow pipes are provided, the cross-sectional area of a common air pipe from several tanks is not less than 1,25 times the area of the common filling pipeline for these tanks
- where the tanks or spaces are situated at the shell side, the connections to the air pipes main are to be above the freeboard deck. Where it is not practical, different position proposed as far as possible above the deepest load waterline may be considered for acceptance. For vessels subject to damage stability requirements these connections are to be above final waterline at any damaged condition assumed by the Damage stability examination as defined in Pt B, Ch 3, App 4, [3.5.2].

f) Vents acting also as overflows may be accepted provided all the requirements applicable to both vents and overflows are complied with.

g) Where tanks are fitted with cross flooding connections, the air pipes are to be of adequate area for these connections.

9.1.9 Strength requirements to resist green sea forces for the air pipes, ventilator pipes and their closing devices located within the forward quarter length

a) In addition to all other requirements specified before, the following shall apply on the exposed deck over the forward 0,25 L, applicable to:

- All ship types of sea going service of length 80 m or more, where the height of the exposed deck in way of the item is less than 0,1 L or 22 m above the summer load waterline, whichever is the lesser.
- For application to existing ships (that are contracted for construction prior to 1 January 2004), see Part A, Chapter 6.

The rule length "L" is the distance, in m, taken as defined in Pt B, Ch 1, Sec 3, [2.1.1].

The requirements do not apply to the cargo tank venting systems and the inert gas systems of tankers.

b) Generally, the bending moments and stresses in air and ventilator pipes are to be calculated at following critical positions:

- at penetration pieces
- at weld or flange connections
- at toes of supporting brackets.

Bending stresses in the net section are not to exceed 0,8 of the specified minimum yield stress or 0,2% proof stress of the steel at room temperature. Irrespective of corrosion protection, a corrosion addition to the net section of 2,0 mm is then to be applied.

Relevant drawing and calculation shall be submitted.

c) For standard air pipes of 760 mm height closed by heads of not more than the tabulated projected area, pipe thickness and bracket heights are specified in Tab 26. Where brackets are required, three or more radial brackets are to be fitted. Brackets are to be of gross thickness 8 mm or more, of minimum length 100 mm, and height according to Tab 27 but need not extend over the joint flange for the head. Bracket toes at the deck are to be suitably supported.

d) For other configurations, loads according to item i) are to be applied, and means of support determined in order to comply with the requirements of item b). Brackets, where fitted, are to be of suitable thickness and length according to their height. Pipe thickness is not to be taken less than as indicated in [9.1.8].

e) For standard ventilators of 900 mm height closed by heads of not more than the tabulated projected area, pipe thickness and bracket heights are specified in Tab 27. Brackets, where required are to be as specified in item c). See also Pt B, Ch 11, Sec 12, [9].

f) For ventilators of height greater than 900 mm, brackets or alternative means of support shall be fitted according to the arrangement acceptable to the Society. See also Pt B, Ch 11, Sec 12, [9]. Pipe thickness is not to be taken less than as indicated in [9.1.8].

g) All component parts and connections of the air pipe or ventilator are to be capable of withstanding the loads defined in item i).

h) Rotating type mushroom ventilator heads are not suitable for application in the areas where these requirements are applied.

i) Applied loading may be calculated:

- The pressures p, in kN/m², acting on air pipes, ventilator pipes and their closing devices may be calculated from:

  $p = 0,5\ \rho\ V^2\ C_d\ C_s\ C_p$

  where:

  ρ : Density of sea water, equal to 1,025 t/m³

  V : Velocity of water over the fore deck, in m/s, to be taken equal to:

  - 13,5 if $d \le 0,5\ d_1$
  - $13,5\sqrt{2\left(1-\frac{d}{d_1}\right)}$

    if $0,5\ d_1 < d < d_1$

  d : Distance, in m, from the summer load line to the exposed deck

  d_1 : 0,1 L or 22 m, whichever is the lesser

  C_d : Shape coefficient, equal to:

  - 0,5 for pipes
  - 1,3 for air pipe or ventilator heads in general
  - 0,8 for an air pipe or ventilator head of cylindrical form with its axis in the vertical direction

  C_s : Slamming coefficient, equal to 3,2

  C_p : Protection coefficient, equal to:

  - 0,7 for pipes and ventilator heads located immediately behind a breakwater or a forecastle
  - 1,0 elsewhere and immediately behind a bulwark.

- Forces acting in the horizontal direction on the pipe and its closing device may be calculated from formula above, using the largest projected area of each component.

Table 26 : 760 mm air pipe thickness and bracket standards

Nominal pipe diameter (mm)	Minimum fitted gross thickness (mm)	Maximum projected area of head (cm²)	Height of brackets **(1)** (mm)
40A **(3)**	6,0	–	520
50A **(3)**	6,0	–	520
65A	6,0	–	480
80A	6,3	–	460
100A	7,0	–	380
125A	7,8	–	300
150A	8,5	–	300
175A	8,5	–	300
200A	8,5 **(2)**	1900	300 **(2)**
250A	8,5 **(2)**	2500	300 **(2)**
300A	8,5 **(2)**	3200	300 **(2)**
350A	8,5 **(2)**	3800	300 **(2)**
400A	8,5 **(2)**	4500	300 **(2)**

(1) Brackets (see [9.1.9] items b) to h)) need not extend over the joint flange for the head.

(2) Brackets are required where the as fitted (gross) thickness is less than 10,5 mm, or where the tabulated projected head area is exceeded.

(3) Not permitted for new ships - see Tab 6.

Note 1: For other air pipe heights, the relevant requirements of [9.1.9] are to be applied.

Table 27 : 900 mm ventilator pipe thickness and bracket standards

Nominal pipe diameter (mm)	Minimum fitted gross thickness, (mm)	Maximum projected area of head (cm^2)	Height of brackets (mm)
80A	6,3	–	460
100A	7,0	–	380
150A	8,5	–	300
200A	8,5	550	–
250A	8,5	880	–
300A	8,5	1200	–
350A	8,5	2000	–
400A	8,5	2700	–
450A	8,5	3300	–
500A	8,5	4000	–
Note 1: For other ventilator heights, the relevant requirements of [9.1.9], items b) to h), are to be applied.			

9.2 Sounding pipes

9.2.1 Principle

a) Sounding devices are to be fitted to tanks intended to contain liquids as well as to all compartments which are not readily accessible at all times.

b) For compartments normally intended to contain liquids, the following systems may be accepted in lieu of sounding pipes:
- a level gauge of an approved type efficiently protected against shocks, or
- a remote level gauging system of an approved type, provided an emergency means of sounding is available in the event of failure affecting such system.

9.2.2 Position of sounding pipes

Sounding pipes are to be located as close as possible to suction pipes.

9.2.3 Termination of sounding pipes

a) As a general rule, sounding pipes are to end above the bulkhead deck or the freeboard deck in easily accessible places and are to be fitted with efficient, permanently attached, metallic closing appliances.

b) In machinery spaces and tunnels, where the provisions of item a) cannot be satisfied, short sounding pipes led to readily accessible positions above the floor and fitted with efficient closing appliances may be accepted.

In ships required to be fitted with a double bottom, such closing appliances are to be of the self-closing type.

9.2.4 Special arrangements for sounding pipes of flammable oil tanks

a) Where sounding pipes are used in flammable (except lubricating) oil systems, they are to terminate in the open air, where no risk of ignition of spillage from the sounding pipe might arise. In particular, they are not to terminate in passenger or crew spaces. As a general rule, they are not to terminate in machinery spaces. However, where the Society considers that this requirement is impracticable, it may permit termination in machinery spaces on condition that the following provisions are satisfied:

1) in addition, an oil-level gauge is provided meeting the provisions of [2.9.2]

2) the sounding pipes terminate in locations remote from ignition hazards unless precautions are taken, such as the fitting of effective screens, to prevent the fuel oil in the case of spillage through the terminations of the sounding pipes from coming into contact with a source of ignition

3) the terminations of sounding pipes are fitted with self-closing blanking devices and with a small diameter self-closing control cock located below the blanking device for the purpose of ascertaining before the blanking device is opened that fuel oil is not present. Provision is to be made so as to ensure that any spillage of fuel oil through the control cock involves no ignition hazard.

b) For lubricating oil and fuel oil leakage tanks less than 2 m^3, the oil-level gauge mentioned in a) 1) and the control cock mentioned in a) 3) need not be provided on condition that the sounding pipes are fitted with appropriate means of closure.

c) Short sounding pipes may be used for tanks other than double bottom tanks without the additional closed level gauge provided an overflow system is fitted.

9.2.5 Closing appliances

a) Self-closing appliances are to be fitted with cylindrical plugs having counterweights such as to ensure automatic closing.

b) Closing appliances not required to be of the self-closing type may consist of a metallic screw cap secured to the pipe by means of a chain or a shut-off valve.

9.2.6 Construction of sounding pipes

a) Sounding pipes are normally to be straight. If it is necessary to provide bends in such pipes, the curvature is to be as small as possible to permit the ready passage of the sounding apparatus.

b) In cargo ships, the sounding arrangement of compartments by means of bent pipes passing through other compartments will be given special consideration by the Society. Such an arrangement is normally accepted only if the compartments passed through are cofferdams or are intended to contain the same liquid as the compartments served by the sounding pipes.

c) Bent portions of sounding pipes are to have reinforced thickness and be suitably supported.

d) The internal diameter of sounding pipes is not to be less than 32 mm. Where sounding pipes pass through refrigerated spaces, or through the insulation of refrigerated spaces in which the temperature may be below 0°C, their internal diameter is to be at least 60 mm.

e) Doubling plates are to be placed under the lower ends of sounding pipes in order to prevent damage to the hull. When sounding pipes with closed lower ends are used, the closing plate is to have reinforced scantlings.

9.3 Overflow pipes

9.3.1 Principle

Overflow pipes are to be fitted to tanks:

- which can be filled by pumping and are designed for a hydrostatic pressure lower than that corresponding to the height of the air pipe, or
- where the cross-sectional area of air pipes is less than that prescribed in [9.1.8], item d).

9.3.2 Design of overflow systems

a) Overflow pipes are to be led:
   - either outside, or
   - in the case of fuel oil or lubricating oil, to an overflow tank of adequate capacity or to a storage tank having a space reserved for overflow purposes.

b) Where tanks containing the same or different liquids are connected to a common overflow system, the arrangement is to be such as to prevent any risk of:
   - intercommunication between the various tanks due to movements of liquid when emptying or filling, or due to the inclination of the ship
   - overfilling of any tank from another assumed flooded due to hull damage.

   For this purpose, overflow pipes are to be led to a high enough point above the deepest load waterline or, alternatively, non-return valves are to fitted where necessary.

c) Arrangements are to be made so that a compartment cannot be flooded from the sea through the overflow in the event of another compartment connected to the same overflow main being bilged. To this end, the openings of overflow pipes discharging overboard are as a rule to be placed above the deepest load waterline and are to be fitted where necessary with non-return valves on the plating, or, alternatively, overflow pipes from tanks are to be led to a point above the deepest load waterline.

d) Where deep tanks which can be used to contain liquid or dry cargo or fuel oil are connected to a common overflow system, arrangements are to be made so that liquid or vapours from other compartments cannot enter such tanks when carrying dry cargo.

e) Where tanks alternately containing fuel oil and ballast water are connected to a common overflow system, arrangements are to be made to prevent the ballast water overflowing into the tanks containing fuel oil and vice-versa.

f) Additional requirements for ships subject to damage stability checks are given in [5.5.3].

9.3.3 Overflow tanks

a) Overflow tanks are to have a capacity sufficient to receive the delivery of the pumps for at least 10 minutes.

b) Overflow tanks are to be fitted with an air pipe complying with [9.1] which may serve as an overflow pipe for the same tank. When the vent pipe reaches a height exceeding the design head of the overflow tank, suitable means are to be provided to limit the actual hydrostatic head on the tank.

   Such means are to discharge to a position which is safe in the opinion of the Society.

c) An alarm device is to be provided to give warning when the oil reaches a predetermined level in the tank, or alternatively, a sight-flow glass is to be provided in the overflow pipe to indicate when any tank is overflowing. Such sight-flow glasses are only to be placed on vertical pipes and in readily visible positions.

9.3.4 Specific arrangements for construction of overflow pipes

a) The internal diameter of overflow pipes is not to be less than 50 mm.

b) In each compartment which can be pumped up, the total cross-sectional area of overflow pipes is not to be less than 1,25 times the cross-sectional area of the corresponding filling pipes.

c) The cross-sectional area of the overflow main is to be sufficient to allow the two largest pipes to discharge simultaneously into the main. Where tanks are served by a common filling pipeline and their overflow pipes are discharging into a main overflow dedicated only to these tanks, the cross sectional area of the main overflow pipe is not to be less than 1,25 times the area of the common filling pipeline of these tanks.

d) Sight glasses may be accepted on overflow lines from fuel oil and lubricating oil systems, provided that:
   - they are located in a vertically dropping line on readily visible and well lit position
   - they are protected against mechanical damages
   - the glass is of heat resisting type.

9.4 Constructional requirements applying to sounding, air and overflow pipes

9.4.1 Materials

a) Sounding, air and overflow pipes are to be made of steel or any other material approved for the application considered.

b) Exposed parts of sounding, air and overflow pipes are to be made of approved metallic materials.

9.4.2 Minimum thickness of steel pipes

The minimum thickness of sounding, air and overflow steel pipes is given in Tab 6. See also [9.1.9].

9.4.3 Passage of pipes through certain spaces

a) Air pipes and sounding pipes led through refrigerated cargo holds or spaces are to be suitably insulated.

b) When sounding, air and overflow pipes made of steel are permitted to pass through ballast tanks or fuel oil tanks, they are to be of reinforced thickness, in accordance with Tab 6.

c) Sounding, air and overflow pipes passing through cargo holds are to be adequately protected.

9.4.4 Self-draining of pipes

Air pipes and overflow pipes are to be so arranged as to be self-draining when the ship is on an even keel.

9.4.5 Name plates

Nameplates are to be fixed at the upper part of air pipes and sounding pipes.

10 Cooling systems

10.1 Application

10.1.1 This article applies to all cooling systems using the following cooling media:

- sea water
- fresh water
- lubricating oil.

Air cooling systems will be given special consideration.

10.2 Principle

10.2.1 General

Sea water and fresh water cooling systems are to be so arranged as to maintain the temperature of the cooled media (lubricating oil, hydraulic oil, charge air, etc.) for propulsion machinery and essential equipment within the manufacturers' recommended limits during all operations, including starting and manoeuvring, under the inclination angles and the ambient conditions specified in Ch 1, Sec 1.

10.2.2 Availability of the cooling system

The cooling system is to be so designed that, in the event of one essential component being inoperative, the cooling of propulsion machinery is maintained. Partial reduction of the propulsion capability may be accepted, however, when it is demonstrated that the safe operation of the ship is not impaired.

10.3 Design of sea water cooling systems

10.3.1 General

a) Sea water cooling of the propulsion engines, auxiliary engines and other essential equipment is to be capable of being supplied by two different means.

b) Where required, standby pumps are not to be connected to the sea inlet serving the other sea water pumps, unless permitted under [10.7.1], item b).

10.3.2 Centralised cooling systems

a) In the case of centralised cooling systems, i.e. systems serving a group of propulsion engines and/or auxiliary engines, reduction gears, compressors and other essential equipment, the following sea water pumps and heat exchangers are to be arranged:
   - one main cooling water pump, which may be driven by the engines, of a capacity sufficient to provide cooling water to all the equipment served
   - one independently driven standby pump of at least the same capacity
   - two heat exchangers, each having at least 50% of the total capacity necessary to provide cooling water to all the equipment served.

b) Where the cooling system is served by a group of identical pumps, the capacity of the standby pump needs only to be equivalent to that of each of these pumps.

c) Ballast pumps or other suitable sea water pumps of appropriate capacity may be used as standby pumps, provided arrangements are made against overpressure in the cooling system.

d) In ships having one or more propulsion engines, each with an output not exceeding 375 kW, the independent standby pump may be replaced by a complete spare pump of appropriate capacity ready to be connected to the cooling circuit.

e) In cases of centralised cooling systems serving only a group of auxiliary engines, the second means of cooling may consist of a connection to a cooling water pump serving the propulsion plant, provided such pump is of sufficient capacity to provide cooling water to both propulsion plant and auxiliary engines.

10.3.3 Individual cooling of propulsion engines

a) Individual cooling systems of propulsion engines are to include at least:
   - one main cooling water pump, which can be driven by the engine
   - one independently driven standby pump
   - one heat exchanger of appropriate capacity.

   Where the output of the engine does not exceed 375 kW, the following arrangements may be accepted:
   - one main cooling water pump, which can be driven by the engine
   - one spare pump of appropriate capacity ready to be connected to the cooling circuit
   - one heat exchanger of appropriate capacity.

b) Where, in ships having more than one engine per propeller or having several propellers, each engine is served by its own cooling circuit, the second means requested in [10.3.1] is to be provided, consisting of:
   - a connection to an independently driven pump, such as a ballast pump or any other suitable sea water pump of sufficient capacity provided arrangements against overpressure in the cooling system are made. (See [10.7.4], item b)), or
   - a complete spare pump identical to those serving the engines and ready to be connected to the cooling circuit.

   This second means may be omitted, however, when safety justifications are provided as regards the propulsion and manoeuvring capabilities of the ship with one cooling circuit disabled.

10.3.4 Individual cooling of auxiliary engines

Where each auxiliary engine is served by its own cooling circuit, no second means of cooling is required.

10.3.5 Cooling of steam plants

a) Steam plants are to be fitted with:
   - a main circulating pump
   - a standby pump capable of ensuring the circulation in the main condenser in the event of failure of the main circulating pump.

b) Where the installation includes more than one propulsive unit, the standby pump is not required, provided a branch pipe is fitted between the discharges of the circulating pumps of each unit.

c) In lieu of the main circulating pump, a sea inlet scoop system may be accepted, provided that an additional means is fitted to ensure the circulation of sea water to the condenser when the ship is manoeuvring. Such means may be:
   - an additional independent pump, or
   - a connection to an available pump of sufficient capacity.

10.3.6 Cooling of other essential equipment

a) The second means of cooling required in [10.3.1] for essential equipment may consist of a connection to a ballast pump or other suitable sea water pump of sufficient capacity, provided arrangements are made against overpressure in the cooling system (see [10.7.4], item b)).

b) However, where such essential equipment is duplicate, this second means may be omitted when justifications are provided as regards the propulsion and manoeuvring capabilities of the ship with the cooling circuit of one set of equipment disabled.

10.4 Design of fresh water cooling systems

10.4.1 General

Fresh water cooling systems are to be designed according to the applicable requirements of [10.3].

10.4.2 Cooling systems

a) Fresh water cooling systems of essential equipment are to include at least:
   - one main cooling water pump, which can be driven by the equipment
   - one independently driven standby pump.

b) The standby pump may be omitted provided an emergency connection to a suitable sea water system is fitted and arranged with a suitable change-over device. Provisions against overpressure in the cooling system are to be made in accordance with [10.7.4], item b).

c) The standby pump may also be omitted in the case of redundancy of the cooled equipment.

10.4.3 Expansion tanks

Fresh water expansion tanks are to be provided with at least:

- a de-aerating device
- a water level indicator
- a filling connection
- a drain.

10.4.4 Protection of contamination by oil

Suitable means are to be provided in fresh water cooling systems comprising fuel oil or lubricating oil heat exchangers in order to detect any contamination of the water by fuel oil or lubricating oil.

If cooling water is used for heating of oil, the heating coils are to be located on the pressure side of the cooling pumps and connected by welding, with no detachable connections where mixing of oil and water may occur. Alternatively a primary and secondary system arrangement may be used.

10.5 Design of oil cooling systems

10.5.1 General

Oil cooling systems are to be designed according to the applicable requirements of [10.3].

10.5.2 Second means of cooling

The second means of cooling requested in [10.3.1] may consist of a satisfactory connection to a lubricating oil pump of sufficient capacity. Arrangements are to be made against overpressure in the cooling system.

10.6 Control and monitoring

10.6.1 Alarms are to be provided for water cooling systems in accordance with Tab 28, in addition to the requirements stated for diesel engines in Ch 1, Sec 2 and for steam plants in Ch 1, Sec 4.

Note 1: Some departures from Tab 28 may be accepted by the Society in the case of ships with a restricted navigation notation.

Table 28 : Cooling systems

Symbol convention H = High, HH = High high, G = group alarm L = Low, LL = Low low, I = individual alarm X = function is required, R = remote	Monitoring		Automatic control				
			System			Auxiliary	
Identification of system parameter	Alarm	Indication	Slow-down	Shut-down	Control	Stand by Start	Stop
Sea water pump pressure or flow	L	local					
Fresh water pump pressure or flow	L	local					
Level in cooling water expansion tank	L	local					

10.7 Arrangement of cooling systems

10.7.1 Sea inlets

a) At least two sea inlets complying with [2.8] are to be provided for the cooling system, one for each means of cooling required in [10.3.1].

b) The two sea inlets may be connected by a cross-over supplying both main cooling pump and standby cooling pump.

c) When the second means of cooling is a spare pump, the two sea inlets are to be provided in any event, both serving the main cooling pump.

d) The sea inlets are to be low inlets, so designed as to remain submerged under all normal navigating conditions.

In general, one sea inlet is to be arranged on each side of the ship.

e) One of the sea inlets may be that of the ballast pump or of the general service pump.

10.7.2 Coolers

a) Coolers are to be fitted with isolating valves at the inlets and outlets.

b) Coolers external to the hull (chest coolers and keel coolers) are to be fitted with isolating valves at the shell.

10.7.3 Filters

a) Where propulsion engines and auxiliary engines for essential services are directly cooled by sea water, both in normal service and in emergency operating conditions, filters are to be fitted on the suction of cooling pumps.

b) These filters are to be so arranged that they can be cleaned without interrupting the cooling water supply.

10.7.4 Pumps

a) Cooling pumps for which the discharge pressure may exceed the design pressure of the piping system are to be fitted with relief valves in accordance with [2.5].

b) Where general service pumps, ballast pumps or other pumps may be connected to a cooling system, arrangements are to be made, in accordance with [2.5], to avoid overpressure in any part of the cooling system.

10.7.5 Air venting

Cocks are to be installed at the highest points of the pipes conveying cooling water to the water jackets for venting air or gases likely to accumulate therein. In the case of closed fresh water cooling systems, the cock is to be connected to the expansion tank.

11 Fuel oil systems

11.1 Application

11.1.1 Scope

This Article applies to all fuel oil systems supplying any kind of installation.

The fuel oils used on board are to comply with Ch 1, Sec 1, [2.12].

11.1.2 Requirements applying to fuel oil systems and not contained in this Section

Additional requirements are given:

- for fuel oil supply equipment forming part of engines, gas turbines, boilers, thermal heaters and incinerators, in the corresponding sections
- for the installation of purifiers, in Part C, Chapter 4,
- for the location and scantling of tanks forming part of the ship's structure, in Part B, Chapter 2 and Part B, Chapter 7
- for auxiliary vehicles refuelling facilities, in Ch 4, Sec 11.

11.2 Principle

11.2.1 General

a) Fuel oil systems are to be so designed as to ensure the proper characteristics (purity, viscosity, pressure) of the fuel oil supply to engines and boilers.

b) Fuel oil systems are to be so designed as to prevent:
   - overflow or spillage of fuel oil from tanks, pipes, fittings, etc.
   - fuel oil from coming into contact with sources of ignition
   - overheating and seizure of fuel oil.

c) Fuel oils used for engines and boilers are to have a flashpoint complying with the provisions of Ch 1, Sec 1, [2.12].

11.2.2 Availability of fuel systems

a) Fuel oil systems are to be so designed that, in the event that any one essential auxiliary of such systems becomes inoperative, the fuel oil supply to boilers and engines can be maintained. Partial reduction of the propulsion capability may be accepted, however, when it is demonstrated that the safe operation of the ship is not impaired.

b) Fuel oil tanks are to be so arranged that, in the event of damage to any one tank, complete loss of the fuel supply to essential services does not occur.

c) Where engines and boilers are operated with heavy fuel oils, provisions are to be made to supply them with fuel oils which do not need to be heated.

11.3 General

11.3.1 Arrangement of fuel oil systems

a) In a ship in which fuel oil is used, the arrangements for the storage, distribution and utilisation of the fuel oil are to be such as to ensure the safety of the ship and persons on board.

b) The provisions of [5.10] are to be complied with.

11.3.2 Valve for oil fuel pumps

Stop valves or cocks are to be fitted on both suction and delivery sides of oil fuel pumps. All oil fuel pumps are to be provided with pressure relief valves on the discharge side so that the discharged oil may be led to the suction side of the pump. Pressure relief valves need not be fitted when the system is served only by centrifugal pumps, so designed that the pressure delivered cannot exceed that for which the piping is designed.

11.3.3 Provision to prevent overpressure

Provisions are to be made to prevent overpressure in any oil tank or in any part of the fuel oil system. Any relief valve is to discharge to a safe position.

11.3.4 Ventilation

The ventilation of machinery spaces is to be sufficient under all normal conditions to prevent accumulation of oil vapour.

11.3.5 Access

Spaces where fuel oil is stored or handled are to be readily accessible.

11.4 Design of fuel oil filling and transfer systems

11.4.1 General

a) A system of pumps and piping for filling and transferring fuel oil is to be provided.

b) Provisions are to be made to allow the transfer of fuel oil from any storage, settling or service tank to another tank.

11.4.2 Filling systems

a) Filling pipes of fuel oil tanks are to terminate on open deck or in filling stations isolated from other spaces and efficiently ventilated. Suitable coamings and drains are to be provided to collect any leakage resulting from filling operations.

   The means shall be provided for the filling lines to prevent of possible overpressure during the bunkering operation, which could be caused by pumps from outboard filling station. For that purpose a warning label may be accepted with clearly declared design pressure of the filling lines and the local pressure gauge fitted in vicinity of the filling connection.

b) Arrangements are to be made to avoid overpressure in the filling lines which are served by pumps on board. Where safety valves are provided for this purpose, they are to discharge to the overflow tank referred to in [9.3.3] or to other safe positions deemed satisfactory.

11.4.3 Independence of fuel oil transfer lines

Except where permitted in [11.4.4], the fuel oil transfer piping system is to be completely separate from the other piping systems of the ship.

11.4.4 Alternative carriage of fuel oil, ballast water or other liquid and dry cargo

Where certain compartments are likely to contain alternatively fuel oil, ballast water and other liquid or dry cargo, the transfer pipes supplying these compartments are to be fitted with blind flanges or other appropriate change-over devices.

11.4.5 Transfer pumps

a) At least two means of transfer are to be provided. One of these means is to be a power pump. The other may consist of:
   - a standby pump, or, alternatively,
   - an emergency connection to another suitable power pump.

Note 1: Where provided, purifiers may be accepted as means of transfer.

b) Where necessary, transfer pumps are to be fitted on their discharge side with a relief valve leading back to the suction of the pump or to any other place deemed satisfactory.

11.5 Arrangement of fuel oil tanks and bunkers

11.5.1 Location of fuel oil tanks

a) No fuel oil tank is to be situated where spillage or leakage therefrom can constitute a hazard by falling on heated surfaces.

b) Fuel oil tanks and bunkers are not to be situated immediately above boilers or in locations where they could be subjected to high temperatures, unless specially agreed by the Society. In general, the distance between fuel oil tanks and boilers is not to be less than 450 mm. Where boilers are situated above double bottom fuel oil tanks, the distance between the double bottom tank top and the lower metallic part of the boilers is not to be less than:

- 750 mm for water tube boilers
- 600 mm for cylindrical boilers.

c) As far as practicable, fuel oil tanks are to be part of the ship's structure and are to be located outside machinery spaces of category A. Where fuel oil tanks, other than double bottom tanks, are necessarily located adjacent to or within machinery spaces of category A, at least one of their vertical sides is to be contiguous to the machinery space boundaries, and is preferably to have a common boundary with the double bottom tanks, and the area of the tank boundary common with the machinery spaces is to be kept to a minimum. Where such tanks are situated within the boundaries of machinery spaces of category A, they are not to contain fuel oil having a flashpoint of less than 60°C.

Note 1: Machinery spaces of category A are defined in Ch 4, Sec 1.

d) The location of fuel oil tanks is to be in compliance with the requirements of Part B, Chapter 2, particularly as regards the installation of cofferdams, the separation between fuel oil tanks or bunkers and the other spaces of the ship, and the protection of these tanks and bunkers against any abnormal rise in temperature.

e) Attention is drawn to the requirements of Pt D, Ch 7, Sec 4 regarding the segregation of fuel bunkers from the cargo area.

11.5.2 Use of free-standing fuel oil tanks

a) In general the use of free-standing fuel oil tanks is to be avoided except on cargo ships, where their use is permitted in category A spaces.

b) For the design and the installation of independent tanks, refer to Pt B, Ch 5, Sec 6 and Part B, Chapter 7.

11.5.3 Protection against oil pollution in the event of collision or grounding

a) Application

The provisions of [11.5.3] apply to all ships with an aggregate oil fuel capacity of 600 m^3 and above.

They apply to all oil fuel tanks except small oil fuel tanks with a maximum individual capacity not exceeding 30 m^3, provided that the aggregate capacity of such excluded tanks is not greater than 600 m^3.

Note 1: For the purpose of application of this requirement, oil fuel means any oil used as fuel oil in connection with the propulsion and auxiliary machinery of the ship in which such oil is carried.

Note 2: The provisions of this requirement apply to oil fuel overflow tanks except if they are provided with an alarm for detection of oil and kept empty according to the operational procedures.

b) Maximum capacity of oil fuel tanks

Individual oil fuel tanks are not to have a capacity of over 2500 m^3.

c) Oil fuel tank protection

For ships having an aggregate oil fuel capacity of 600 m^3 and above, oil fuel tanks are to be located at a sufficient distance from the bottom shell plating and from the side shell plating in accordance with the relevant provisions of MARPOL 73/78, Annex I, Regulation 12A.

d) Suction wells

Suction wells in oil fuel tanks may protrude in the double bottom provided that the conditions stated in MARPOL 73/78, Annex I, Regulation 12A.10 are satisfied.

e) Valves

Lines of fuel oil piping located at a distance from the ship's bottom or from the ship's side less than those referred to in item c) are to be fitted with valves or similar closing devices within, or immediately adjacent to, the oil fuel tank. These valves are to be capable of being brought into operation from a readily accessible enclosed space the location of which is accessible from the navigation bridge or propulsion machinery control position without traversing exposed freeboard or superstructure decks. The valves are to close in case of remote control system failure and are to be kept closed at sea at any time when the tank contains oil fuel except that they may be opened during oil fuel transfer operations.

11.6 Design of fuel oil tanks and bunkers

11.6.1 General

Tanks such as collector tanks, de-aerator tanks etc. are to be considered as fuel oil tanks for the purpose of application of this sub-article, and in particular regarding the valve requirements.

Tanks with a volume lower than 500 l will be given special consideration by the Society.

11.6.2 Scantlings

The scantlings of fuel oil tanks and bunkers are to comply with the requirements stated in Part B, Chapter 7.

11.6.3 Filling and suction pipes

a) All suction pipes from fuel oil tanks and bunkers, including those in the double bottom, are to be provided with valves.

b) For storage tanks, filling pipes may also be used for suction purposes.

c) For fuel oil tanks located above the double bottom, filling pipes which are not led to the upper part of such tanks, are to be provided with non-return valves, unless they are fitted with valves arranged in accordance with the requirements stated in [11.6.4].

d) For oil piping which is led through engine room bulkheads, shut-off valves are to be fitted in the engine room on the bulkhead, or close to, except where it is demonstrated that possible failure of the piping would not affect the availability of the fuel oil system or the safety of engine room, in general.

e) The valves requested in items a), c) and d) shall be located on the tank or bulkhead itself. However, short distance pieces of reinforced wall thickness as per Tab 6 may be accepted and are to be kept as short as possible.

f) For filling lines entering at the top of a tank and with inside extension towards the bottom, airholes are to be drilled in the pipe near the penetration in order to avoid the siphoning effect.

g) As an alternative to the requirement of shut-off non-return valves of item c), the tank may be fitted with an overflow alarm below the filling line and means, such as a procedure, are to be provided to ensure that the tank will not be filled above this level.

11.6.4 Remote control of valves

a) Every fuel oil pipe which, if damaged, would allow oil to escape from a storage, settling or daily service tank having a capacity of 500 l and above situated above the double bottom, is to be fitted with a cock or valve directly on the tank capable of being closed from a safe position outside the space in which such tanks are situated in the event of a fire occurring in such space.

Note 1: For the location of the remote controls, refer to [11.10.3], item c).

b) Such valves and cocks are also to include local control. Indicators are to be provided on the remote and local controls to show whether they are open or shut (see [2.7.3]). Where quick-closing valves are used, the indicators for remote controls may be omitted.

c) In the special case of deep tanks situated in any shaft or pipe tunnel or similar space, valves are to be fitted on the tank but control in the event of fire may be effected by means of an additional valve on the pipe or pipes outside the tunnel or similar space. If such additional valve is fitted in the machinery space it is to be operated from a position outside this space.

Note 2: For cargo ships of less than 500 gross tonnage and non-propelled ships where the fuel oil transfer installation is designed for manual operation, suction valves from fuel oil tanks and bunkers, with the exception of daily service tanks, need not be arranged with remote controls provided they are maintained closed except during transfer operations. Such valves are, however, to be readily accessible and instruction plates are to be fitted in their vicinity specifying that they are to be kept closed except during transfer operations.

11.6.5 Drain pipes

Where fitted, drain pipes are to be provided with self-closing valves or cocks.

11.6.6 Air and overflow pipes

Air and overflow pipes are to comply with [9.1] and [9.3].

11.6.7 Sounding pipes and level gauges

a) Safe and efficient means of ascertaining the amount of fuel oil contained in any fuel oil tank are to be provided.

b) Sounding pipes of fuel oil tanks are to comply with the provisions of [9.2].

c) Oil-level gauges complying with [2.9.2] may be used in place of sounding pipes.

d) Gauge cocks for ascertaining the level in the tanks are not to be used.

11.7 Design of fuel oil heating systems

11.7.1 General

a) Where heavy fuel oil is used, a suitable heating system is to be provided for storage tanks, settling tanks and service tanks in order to ensure that the fuel oil has the correct fluidity and the fuel pumps operate efficiently.

b) Where necessary for pumping purposes, storage tanks containing heavy fuel oil are to be provided with heating systems.

c) Where necessary, pumps, filters, pipes and fittings are to be provided with heat tracing systems.

d) Where main or auxiliary engines are supplied with fuel oil which needs to be heated, arrangements are to be made so that the engines can still operate if one oil heating system or the heating power source is out of action. Such arrangements may consist of an alternative supply of the engines in accordance with [11.9.2].

11.7.2 Tank heating systems

a) Oil fuel in storage tanks are not to be heated to temperatures within 10°C below the flashpoint of the fuel oil, except that, where oil fuel in service tanks, settling tanks and any other tanks in supply system is heated, the following arrangements are to be provided:
   - the length of the vent pipes from such tanks and/or a cooling device is sufficient for cooling the vapours to below 60°C, or the outlet of the vent pipes is located 3 m away from a source of ignition
   - the vent pipes are fitted with flame screens
   - there are no openings from the vapour space of the fuel tanks into machinery spaces (bolted manholes are acceptable)
   - enclosed spaces are not to be located directly over such fuel tanks, except for vented cofferdams
   - electrical equipment is not to be fitted in the vapour space of the tanks, unless it is certified to be intrinsically safe.

b) The temperature of the heating medium is not to exceed 220°C.

c) Automatic control sensors are to be provided for each heated tank to maintain the temperature of the fuel oil below the limits prescribed in item a).

   For storage tanks, the manual control may be accepted subject to special consideration by the Society in each case.

d) Heated tanks are to be provided with temperature measuring systems.

e) The heating coils inlet and outlet connections at the tank are to be fitted with suitable means for closing. For steam heating coils, additional means are to be provided between tank outlet and closing device to enable testing the condensate for presence of oil.

   Heating pipes and coils inside the tanks are to be of material suitable for the heated fluid.

   For steel pipes, the thickness is not to be less than the values given in column 4, with Note (4), of Tab 6.

   The heating coils within the tanks are to have welded connections and are to be supported in such a way that they are not subject to non permissible stress due to vibration or thermal extension.

11.7.3 Fuel oil heaters

a) Where steam heaters or heaters using other heating media are provided in fuel oil systems, they are to be fitted with at least a high temperature alarm or a low flow alarm in addition to a temperature control, except where temperatures dangerous for the ignition of the fuel oil cannot be reached.

b) Electric heating of fuel oil is to be avoided as far as practicable.

c) However, when electric heaters are fitted, means are to be provided to ensure that heating elements are permanently submerged during operation. In all cases a safety temperature switch is to be fitted in order to avoid a surface temperature of 220°C and above. It is to be:
   - independent from the automatic control sensor
   - designed to cut off the electrical power supply in the event of excessive temperature
   - provided with manual reset.

d) Fuel oil heaters are to be fitted with relief valves leading back to the pump suction concerned or to any other place deemed satisfactory.

11.8 Design of fuel oil treatment systems

11.8.1 General

a) Heavy fuel oils used in diesel engines are to be purified and filtered according to the engine manufacturer's requirements.

b) Provisions are to be made to avoid inadvertent entry of non-purified heavy fuel into the daily service tanks, in particular through the overflow system.

Note 1: The "fuel oil treatment system" does not cover the use of additives.

11.8.2 Drains

a) Settling tanks or, where settling tanks are not provided, daily service tanks, are to be provided with drains permitting the evacuation of water and impurities likely to accumulate in the lower part of such tanks.

b) Efficient means are to be provided for draining oily water escaping from the drains.

11.8.3 Purifiers

a) Where fuel oil needs to be purified, at least two purifiers are to be installed on board, each capable of efficiently purifying the amount of fuel oil necessary for the normal operation of the engines.

Note 1: On ships with a restricted navigation notation where fuel oil needs to be purified, one purifier only may be accepted.

b) Subject to special consideration by the Society, the capacity of the standby purifier may be less than that required in a), depending on the arrangements made for the fuel oil service tanks to satisfy the requirement in [11.9.2].

c) The standby purifier may also be used for other services.

d) Each purifier is to be provided with an alarm in case of failures likely to affect the quality of the purified fuel oil.

e) Fuel oil purifiers are to be installed as required in Part C, Chapter 4.

11.9 Design of fuel supply systems

11.9.1 General

a) Except otherwise specified, the propulsion machinery and auxiliary engines which are able to use the same type of fuel may be supplied from the same fuel source, provided that the following is satisfied:
   - the viscosity, inlet pressure and outlet pressure required by the engine's manufacturer are to be identical
   - the fuel oil preparation unit is to comply with the provisions of [11.9.4]
   - the capacity of fuel oil preparation unit is to be sufficient for maximum continuous rating of all supplied engines in normal working conditions
   - the fuel oil lines supplying propulsion machinery and those supplying auxiliary engines are to be so arranged that a failure within one of those lines is not to render the other lines inoperable
   - the arrangement to stop propulsion from outside the machinery spaces is not to affect the main electrical power supply.

   See also Part F for requirements associated with the applicable additional class notations.

b) In ships where heavy fuel oil and marine diesel oil are used, a change-over system from one fuel to the other is to be provided. This system is to be so designed as to avoid:
   - overheating of marine diesel oil
   - inadvertent ingress of heavy fuel oil into marine diesel oil tanks.

c) When necessary, arrangements are to be made for cooling the marine diesel oil from engine return lines.

11.9.2 Fuel oil service tanks

a) For the application of the below requirements, any fuel oil which requires post service tank heating to achieve the required injection viscosity is not regarded as Marine Diesel Oil (MDO).

b) A service tank is a fuel oil tank which contains only fuel of a quality ready for use i.e. fuel of a grade and quality that meet the specification required by the equipment manufacturer. A service tank is to be declared as such and not to be used for any other purpose.

c) In general, two fuel oil service tanks for each type of fuel used on board necessary for propulsion and vital systems, or equivalent arrangements, are to be provided. Each tank is to have a capacity of at least 8 h at maximum continuous rating of the propulsion plant and normal operating load at sea of the generator plant.

d) For “one fuel ship”, where main and auxiliary engines and boiler(s) are operated with Heavy Fuel Oil (HFO), the arrangements complying with this regulation or acceptable "equivalent arrangements" shall be provided.

   The arrangements complying with this regulation shall comprise at least the following tanks:
   - two (2) HFO service tanks, each of a capacity sufficient for at least 8 h operation of main engine(s), auxiliary engines and auxiliary boiler(s), and
   - one (1) Marine Diesel Oil (MDO) service tank for initial cold starting or repair work of engines or boilers.

   Acceptable “equivalent arrangements” shall comprise at least:
   - one (1) HFO service tank with a capacity sufficient for at least 8 h operation of main engine(s), auxiliary engines and auxiliary boiler(s), and
   - one (1) MDO service tank with a capacity sufficient for at least 8 h operation of main engine(s), auxiliary engines and auxiliary boiler(s), and
   - for pilot burners of auxiliary boilers, if provided, an additional MDO service tank for 8 h may be required.

   This arrangement only applies where main and auxiliary engines can operate with HFO under all load conditions and, in the case of main engines, during manoeuvring.

e) Where main engines and auxiliary boiler(s) are operated with Heavy Fuel Oil (HFO) and auxiliary engines are operating with Marine Diesel Oil (MDO), the arrangements complying with this regulation or acceptable "equivalent arrangements" shall be provided.

   The arrangements complying with this regulation shall comprise at least the following tanks:
   - two (2) HFO service tanks, each of a capacity sufficient for at least 8 h operation of main engine(s) and auxiliary boiler(s), and
   - two (2) MDO service tanks each of a capacity sufficient for at least 8 h operation of auxiliary engines.

   Acceptable “equivalent arrangements” shall comprise at least:
   - one (1) HFO service tank with a capacity sufficient for at least 8 h operation of main engine(s) and auxiliary boiler(s), and
   - two (2) MDO service tanks, each of a capacity sufficient for:
     - 4 h operation of main engine(s), auxiliary engines and auxiliary boiler(s), or
     - 8 h operation of auxiliary engines and auxiliary boiler(s).

f) The "equivalent arrangements" in items d) and e) apply, provided the propulsion and vital systems using two types of fuel support rapid fuel change over and are capable of operating in all normal operating conditions at sea with both types of fuel (MDO and HFO).

g) The arrangement of oil fuel service tanks is to be such that one tank can continue to supply oil fuel when the other is being cleaned or opened up for repair.

h) The use of a settling tank with or without purifiers, or purifiers alone, and one service tank is not acceptable as an "equivalent arrangement" to two service tanks.

Note 1: This requirement [11.9.2] need not be applied to cargo ships of less than 500 gross tonnage and non-propelled ships.

11.9.3 Fuel oil supply to boilers

a) In ships where boilers burning oil under pressure are installed to supply steam to the propulsion machinery or auxiliary machinery serving essential services, the fuel oil supply system is to include at least the following equipment:

- Two independently driven fuel oil service pumps, each one of a capacity sufficient to supply the boilers at their rated output. The pumps are to be arranged such that one may be overhauled while the other is in service.
- Filters or strainers fitted on the suction lines and so arranged that they can be cleaned without interrupting the fuel supply. For that purpose, two filters or strainers fitted in parallel, or one duplex type with a change over facility, may be accepted.
- Two heaters in the case that fuel oil heating is required, each one of a capacity sufficient to supply heated fuel oil to the boilers at their normal operating capacity. The heaters are to be arranged such that one may be overhauled while the other is in service.

For boiler plants where exhaust gas boiler is fitted, such that steam service essential for propulsion can be supplied without the operation of the fuel oil system of the auxiliary boiler and that other essential services, as defined in Pt A, Ch 1, Sec 1, [1.2.1], are not to remain inoperable, only one fuel oil heater may be accepted.

b) The fuel oil supply system is to be capable of supplying the fuel oil necessary to generate enough steam for propulsion purposes and essential services with one unit out of action.

c) A quick-closing valve is to be provided on the fuel supply to the burners of each boiler, arranged to be easily operated in case of emergency, either directly or by remote control.

d) The fuel supply to the burners is to be capable of being automatically cut off when required under Ch 1, Sec 3, [5.1.8].

e) Burners are to comply with Ch 1, Sec 3, [3.2.6].

f) Where burners are provided with fuel oil flow-back to the pump suctions or other parts under pressure, non-return devices are to be provided to prevent fuel oil from flowing back to the burners when the oil supply is cut off.

g) Where fuel oil is supplied to the burners by gravity, a double filter satisfying the provisions of item a) is to be provided in the supply line.

h) Fuel oil supply systems are to be entirely separate from feed, bilge, ballast and other piping systems.

11.9.4 Fuel oil supply to internal combustion engines

a) The suctions of engine fuel pumps are to be so arranged as to prevent the pumping of water and sludge likely to accumulate after decanting at the lower part of service tanks.

b) Internal combustion engines intended for main propulsion are to be fitted with at least two filters, or similar devices, so arranged that one of the filters can be overhauled while the other is in use.

Note 1: Where the propulsion plant consists of:

- two or more engines, each one with its own filter, or
- one engine with an output not exceeding 375 kW,

the second filter may be replaced by a readily accessible and easily replaceable spare filter.

c) Oil filters fitted in parallel are to be so arranged as to minimise the possibility of a filter under pressure being opened by mistake.

Filter chambers are to be provided with suitable means for:

- venting when put into operation
- de-pressurising before being opened.

Valves or cocks used for this purpose are to be fitted with drain pipes led to a safe location.

d) Oil filters are to be so located that in the event of a leakage the fuel oil cannot be pulverised onto the exhaust manifold.

e) When a fuel oil booster pump is fitted which is essential to the operation of the main engine, a standby pump, connected ready for immediate use, is to be provided.

The standby pump may be replaced by a complete spare pump of appropriate capacity ready to be connected, in the following cases:

- where two or more main engines are fitted, each with its own booster pump
- in ships having main engines each with an output not exceeding 375 kW.

f) Where fuel oils require pre-heating in order to have the appropriate viscosity when being injected in the engine, the following equipment is to be provided in the fuel oil line:
   - one viscosity control and monitoring system
   - two pre-heaters, one serving as a standby for the other.

g) Excess fuel oil from pumps or injectors is to be led back to the service or settling tanks, or to other tanks intended for this purpose.

h) De-aeration tanks fitted in pressurised fuel oil return lines are to be equipped with at least:
   - an automatic venting valve or equivalent device discharging to the daily service tank or to other safe place deemed satisfactorily having a device for flow detection.
   - a non-return valve in the return line from the engines.

i) For high pressure fuel oil pipes and other components which may be built-in or attached to the engine, see Ch 1, Sec 2, [2.5].

   Anyhow, the components of a diesel engine fuel oil system are to be designed considering the maximum peak pressure which will be experienced in service, including any high pressure pulses which are generated and transmitted back into the fuel supply and spill lines by the action of fuel injection pumps.

j) Connections within the fuel supply and spill lines are to be constructed having regard to their ability to prevent pressurised fuel oil leaks while in service and after maintenance.

k) In multi-engine installations which are supplied from the same fuel source, means of isolating the fuel supply and spill piping to individual engines are to be provided. The means of isolation are not to affect the operation of the other engines and shall be operable from a position not rendered inaccessible by a fire on any of the engines.

11.10 Control and monitoring

11.10.1 Monitoring

Alarms and safeguards are to be provided for fuel oil systems in accordance with Tab 29.

Note 1: Some departures from Tab 29 may be accepted by the Society in the case of ships with a restricted navigation notation.

11.10.2 Automatic controls

Automatic temperature control is to be provided for:

- steam heaters or heaters using other media
- electric heaters.

11.10.3 Remote controls

a) The remote control arrangement of valves fitted on fuel oil tanks is to comply with [11.6.4].

b) The power supply to:
   - fuel oil burning pumps
   - transfer pumps and other pumps of the fuel oil system, and
   - fuel oil purifiers,

   is to be capable of being stopped from a position within the space containing the pumps and from another position located outside such space and always accessible in the event of fire within the space.

c) Remote control of the valve fitted to the emergency generator fuel tank is to be in a separate location from that of other valves fitted to tanks in the engine room.

   "Separate location" does not mean separate spaces.

d) The positions of the remote controls are also to comply with Part C, Chapter 3.

11.11 Construction of fuel oil piping systems

11.11.1 Materials

a) Fuel oil pipes and their valves are to be of steel or other approved material, except that the use of flexible pipes may be accepted provided they comply with [2.6.4].

b) The materials and/or their surface treatment used for the storage and distribution of oil fuel are to be selected such that they do not introduce contamination or modify the properties of the fuel. In addition to the criterion given in Tab 5, the use of copper or zinc compounds in oil fuel distribution and utilisation piping is not permitted except for small diameter pipes in low pressure systems.

11.11.2 Pipe thickness

The thickness of pipes conveying heated fuel oil, as well as their flanges, is to be calculated for a design pressure determined in accordance with Tab 4.

Table 29 : Fuel oil systems

Symbol convention H = High, HH = High high, G = group alarm L = Low, LL = Low low, I = individual alarm X = function is required, R = remote	Monitoring		Automatic control				
			System			Auxiliary	
Identification of system parameter	Alarm	Indication	Slow-down	Shut-down	Control	Stand by Start	Stop
Fuel oil overflow tank level	H **(1)**						
Air pipe water trap level on fuel oil tanks	H **(2)**						
Fuel oil temperature after heaters	H **(4)**	local		X **(5)**			
Sludge tank level		local					
Fuel oil settling tank temperature	H **(3)**	local					
Fuel oil level in daily service tank	L+H **(1)**	local					
Fuel oil daily service tank temperature	H **(3)**	local					

(1) Or sightglasses on the over flow pipe, see [9.3.4], item d).
(2) Or alternative arrangement as per [9.1.7], item c).
(3) Applicable where heating arrangements are provided.
(4) Or low flow alarm in addition to temperature control when heated by steam or other media.
(5) Cut off of electrical power supply when electrically heated.

11.11.3 Pipe connections

a) Connections and fittings of pipes containing fuel oil are to be suitable for a design pressure according to Tab 3 and Tab 4.

b) Connections of pipes conveying heated fuel oil are to be made by means of close-fitting flanges, with joints made of a material impervious to oil heated to 160°C and as thin as possible.

11.12 Arrangement of fuel oil piping systems

11.12.1 Passage of fuel oil pipes through tanks

a) Fuel pipes are not to pass through tanks containing boiler feed water, fresh water, other flammable oil or liquid cargo, unless they are contained within tunnels.

b) Transfer pipes passing through ballast tanks are to have a reinforced thickness complying with Tab 6.

11.12.2 Passage of pipes through fuel oil tanks

Boiler feed water, fresh water or liquid cargo pipes are not to pass through fuel oil tanks, unless such pipes are contained within tunnels.

11.12.3 Segregation of fuel oil purifiers

Purifiers for heated fuel oil are to be in accordance with Ch 4, Sec 6, [4.1.2].

12 Lubricating oil systems

12.1 Application

12.1.1 This Article applies to lubricating oil systems serving diesel engines, steam and gas turbines, reduction gears, clutches and controllable pitch propellers, for lubrication or control purposes.

It also applies to separate oil systems intended for the cooling of engine pistons.

12.2 Principle

12.2.1 General

a) Lubricating oil systems are to be so designed as to ensure reliable lubrication of the engines, turbines and other equipment, including electric motors, intended for propulsion:
   - over the whole speed range, including starting, stopping and, where applicable, manoeuvring
   - for all the inclinations angles stated in Ch 1, Sec 1

b) Lubricating oil systems are to be so designed as to ensure sufficient heat transfer and appropriate filtration of the oil.

c) Lubricating oil systems are to be so designed as to prevent oil from entering into contact with sources of ignition.

12.2.2 Availability

a) Lubricating oil systems are to be so designed that, in the event that any one pump is inoperative, the lubrication of the engines and other equipment is maintained. Partial reduction of the propulsion capability may be accepted, however, when it is demonstrated that the safe operation of the ship is not impaired.

b) An emergency lubricating system, such as a gravity system, is to be provided to ensure sufficient lubrication of equipment which may be damaged due to a failure of the pump supply.

12.3 General

12.3.1 Arrangement of lubricating oil systems

a) The arrangements for the storage, distribution and utilisation of oil used in pressure lubrication systems are to be such as to ensure the safety of the ship and persons on board.

b) The provisions of [5.10] are to be complied with, where applicable.

12.3.2 Filtration

a) In forced lubrication systems, a device is to be fitted which efficiently filters the lubricating oil in the circuit.

b) The filters provided for this purpose for main machinery and machinery driving electric propulsion generators are to be so arranged that they can be easily cleaned without stopping the lubrication of the machines.

c) The fineness of the filter mesh is to comply with the requirements of the engine or turbine manufacturers.

d) Where filters are fitted on the discharge side of lubricating oil pumps, a relief valve leading back to the suction or to any other convenient place is to be provided on the discharge of the pumps.

12.3.3 Purification

Where lubricating oil needs to be purified, the arrangement of the purifiers are to comply with [11.8.3].

12.3.4 Heat transfer

Lubricating oil heaters are to comply with [11.7.3].

12.4 Design of engine lubricating oil systems

12.4.1 Lubrication of propulsion engines

a) Main engines are to be provided with at least two power lubricating pumps, of such a capacity as to maintain normal lubrication with any one pump out of action.

b) In the case of propulsion plants comprising:
   - more than one engine, each with its own lubricating pump, or
   - one engine with an output not exceeding 220 kW, one of the pumps mentioned in item a) may be a spare pump ready to be connected to the lubricating oil system, provided disassembling and reassembling operations can be carried out on board in a short time.

12.4.2 Lubrication of auxiliary engines

a) For auxiliary engines with their own lubricating pump, no additional pump is required.

b) For auxiliary engines with a common lubricating system, at least two pumps are to be provided. However, when such engines are intended for non-essential services, no additional pump is required.

12.4.3 Piston cooling

The requirements in [12.4.2] are also applicable to separate oil systems intended for the cooling of pistons.

12.5 Design of steam turbine lubrication systems

12.5.1 General

An alarm device is to be provided giving audible warning in the event of damage or of an appreciable reduction of the oil pressure.

12.5.2 Lubrication of propulsive turbines and turbogenerators

a) Propulsive turbines and turbogenerators are to be provided with:
   - one main lubricating pump, and
   - one independently driven standby pump of at least the same capacity.

b) Lubricating systems for propulsive turbines and turbogenerators are to be provided with a device which stops the steam supply to the turbines (see [12.7.1]).

12.5.3 Emergency lubrication of propulsive turbines and turbogenerators

a) Propulsive turbines and turbogenerators are to be provided with an emergency lubricating system arranged for automatic start (see [12.7.1]).

b) When a gravity system is provided for the purpose of a), it is to ensure an adequate lubrication for not less than six minutes and, in the case of turbogenerators, for a period at least equal to the stopping period after unloading.

c) When the emergency supply is fulfilled by means of an emergency pump, it is to be so arranged that its operation is not affected by a failure of the power supply.

d) Suitable arrangements for cooling the bearings after stopping may also be required.

12.5.4 Lubrication of auxiliary turbines intended for essential services

a) Auxiliary turbines intended for essential services are to be provided with:
   - one main lubricating pump, and
   - one independently driven standby pump of at least the same capacity.

b) The standby pump is to be capable of supplying satisfactory lubrication to the turbines during starting and stopping operations.

12.6 Design of lubricating oil tanks

12.6.1 Remote control of valves

Lubricating oil tanks with a capacity of 500 litres and above are to be fitted with remote controlled valves in accordance with the provisions of [11.6.4].

The remote controlled valves need not be arranged for storage tanks on which valves are normally closed except during transfer operation, or where it is determined that an unintended operation of a quick closing valve on the oil lubricating tank would endanger the safe operation of the main propulsion and essential auxiliary machinery.

12.6.2 Filling and suction pipes

Filling and suction pipes are to comply with the provisions of [11.6.3].

12.6.3 Air and overflow pipes

Air and overflow pipes are to comply with the provisions of [9.1] and [9.3].

12.6.4 Sounding pipes and level gauges

a) Safe and efficient means of ascertaining the amount of lubricating oil contained in the tanks are to be provided.

b) Sounding pipes are to comply with the provisions of [9.2].

c) Oil-level gauges complying with [2.9.2] may be used in place of sounding pipes.

d) Gauge cocks for ascertaining the level in the tanks are not to be used.

12.6.5 Oil collecting tanks for engines

a) In ships required to be fitted with a double bottom, wells for lubricating oil under main engines may be permitted by the Society provided it is satisfied that the arrangements give protection equivalent to that afforded by a double bottom complying with Pt B, Ch 2, Sec 2.

b) Where, in ships required to be fitted with a double bottom, oil collecting tanks extend to the outer bottom, a valve is to be fitted on the oil drain pipe, located between the engine sump and the oil drain tank. This valve is to be capable of being closed from a readily accessible position located above the working platform.

   Alternative arrangements will be given special consideration.

c) Oil collecting pipes from the engine sump to the oil collecting tank are to be submerged at their outlet ends.

12.7 Control and monitoring

12.7.1 In addition to the requirements in:

- Ch 1, Sec 2 for diesel engines,
- Ch 1, Sec 4 for steam turbines,
- Ch 1, Sec 5 for gas turbines and
- Ch 1, Sec 6 for gears,

alarms are to be provided for lubricating oil systems in accordance with Tab 30.

Note 1: Some departures from Tab 30 may be accepted by the Society in the case of ships with a restricted navigation notation.

Table 30 : Lubricating oil systems

Symbol convention H = High, HH = High high, G = group alarm L = Low, LL = Low low, I = individual alarm X = function is required, R = remote	Monitoring		Automatic control				
			System			Auxiliary	
Identification of system parameter	Alarm	Indication	Slow-down	Shut-down	Control	Stand by Start	Stop
Air pipe water trap level of lubricating oil tank **(1)**	H						
Sludge tank level		local					
(1) See [9.1.7].							

12.8 Construction of lubricating oil piping systems

12.8.1 Materials

The materials used in the storage and distribution of lubricating oil are to be selected such that they do not introduce contaminants or modify the properties of the oil. In addition to the criterion given in Tab 5, the use of cadmium or zinc in lubricating oil systems, where they may normally come into contact with the oil, is not permitted.

12.8.2 Air and overflow pipes

Air and overflow pipes are to comply with [9.1] and [9.3], including [5.10], as applicable.

12.8.3 Sounding pipes and level gauges

a) Safe and efficient means of ascertaining the amount of oil contained in any lubricating oil tank are to be provided.

b) Sounding pipes of lubricating oil tanks are to comply with the provisions of [9.2].

c) Oil-level gauges complying with [2.9.2] may be used in place of sounding pipes.

d) Gauge cocks for ascertaining the level in the tanks are not to be used.

13 Thermal oil systems

13.1 Application

13.1.1 This Article applies to all thermal oil systems involving organic liquids heated below their initial boiling temperature at atmospheric pressure by means of:

- oil fired heaters,
- exhaust gas heaters, or
- electric heaters.

13.2 Principle

13.2.1 General

Thermal oil systems are to be so designed as to:

- avoid overheating of the thermal oil and contact with air
- take into account the compatibility of the thermal oil with the heated products in case of contact due to leakage of coils or heater tubes
- prevent oil from coming into contact with sources of ignition.

13.2.2 Availability

Thermal oil systems are to be so designed that, in the event that any one essential auxiliary is inoperative, the thermal oil supply to essential services can be maintained. Partial reduction of the propulsion capability may be accepted, however, when it is demonstrated that the safe operation of the ship is not impaired.

13.3 General

13.3.1 Limitations on use of thermal oil

a) The oil is to be used in the temperature ranges specified by the producer. The delivery temperature is, however, to be kept 50°C below the oil distillation point.

b) Thermal oil is not to be used for the direct heating of:
   - accommodation
   - fresh drinking water
   - liquid cargoes with flashpoints below 60°C, except where permitted in Part D, Chapter 7.

13.3.2 Location of thermal oil system components

a) Thermal oil heaters are normally to be located in spaces separated from main and auxiliary machinery spaces, as required in Ch 1, Sec 1, [3.7.3].

b) Where demonstrated that the arrangement required in item a) is not practical, thermal oil heaters located in machinery spaces and protected by adequate screening may be accepted, subject to special consideration by the Society for each particular case.

c) Drainage of spaces where thermal oil system components are located is to comply with [5.10.4], item f).

Note 1: For the purpose of application of Part C, Chapter 4, spaces where thermal oil heaters are located are to be considered as machinery spaces of category A.

13.3.3 Provision for quick drainage and alternative arrangements

a) Inlet and outlet valves of oil fired and exhaust fired heaters are to be arranged for remote closing from outside the compartment where they are situated.

   As an alternative, thermal oil systems are to be arranged for quick gravity drainage of the thermal oil contained in the system into a draining tank.

b) The expansion tank is to be arranged for quick gravity drainage into a draining tank.

   However, where the expansion tank is located in a low fire risk space, the quick drainage system may be replaced by a remote controlled closing device for isolating the expansion tank.

   The quick drainage system and the alternative closing device are to be capable of being controlled from inside and outside the space containing the expansion tank.

13.3.4 Ventilation

a) Spaces containing thermal oil heaters are to be suitably mechanically ventilated.

b) Ventilation is to be capable of being stopped from outside these spaces.

13.4 Design of thermal oil heaters and heat exchangers

13.4.1 Thermal oil heaters

Oil fired and exhaust-fired thermal oil heaters are to be designed, equipped and controlled in accordance with the requirements specified in Ch 1, Sec 3.

13.4.2 Heat exchangers

Heat exchangers are to be designed and equipped in accordance with the requirements specified in Ch 1, Sec 3.

13.5 Design of storage, expansion and draining tanks

13.5.1 Storage and draining tanks

a) The capacity of the storage tank is to be sufficient to compensate the losses expected in service.

b) The capacity of the draining tank is to be sufficient to collect the quantity of thermal oil contained in the system, including the expansion tank.

c) Storage and draining tanks may be combined.

13.5.2 Expansion tanks

a) The capacity of the expansion tank is to be sufficient to allow volume variations, due to temperature changes, of all the circulating oil.

b) The expansion tank is to be so designed, installed and connected to the circuit as to ensure that the temperature inside the tank remains below 50°C.

13.5.3 Drain pipes

Where provided, drains pipes of thermal oil tanks are to be fitted with self-closing valves or cocks.

13.5.4 Air pipes

a) Air pipes fitted to the expansion and drainage tanks are to be suitably sized to allow the quick gravity drainage referred to in [13.3.3].

b) The applicable requirements of [9.1] are to be complied with.

13.5.5 Overflow pipes

a) The expansion tank is to be fitted with an overflow pipe led to the drainage tank. This overflow pipe may be combined with the quick draining line provided for in [13.3.3], item b).

b) The applicable requirements of [9.3] are to be complied with.

13.5.6 Sounding pipes and level gauges

a) Sounding pipes are to comply with the provisions of [9.2].

b) Level gauges are to comply with the provisions of [2.9.2].

13.6 Design of circulation and heat exchange systems

13.6.1 Circulating pumps

At least two circulating pumps are to be provided, of such a capacity as to maintain a sufficient flow in the heaters with any one pump out of action.

However, for circulating systems supplying non-essential services, one circulating pump only may be accepted.

13.6.2 Filters

A device which efficiently filters the thermal oil is to be provided in the circuit.

In the case of essential services, the filters provided for this purpose are to be so arranged that they can be easily cleaned without stopping the thermal oil supply.

The fineness of the filter mesh is to comply with the requirements of the thermal oil heating installation manufacturer.

13.7 Control and monitoring

13.7.1 Monitoring

In addition to the requirements specified in Ch 1, Sec 3, [3.3.1], item c) and Ch 1, Sec 3, [5.3] for thermal heaters and heat exchangers, alarms and safeguards for thermal oil systems are to be provided in accordance with Ch 1, Sec 3, Tab 23.

Note 1: Some departures from Ch 1, Sec 3, Tab 23 may be accepted by the Society in the case of ships with a restricted navigation notation.

13.7.2 Remote control

a) Remote control is to be arranged for:
   - shut-off of circulating pumps
   - quick drainage of the thermal oil system and expansion tank, or shut-off of the alternative devices (see [13.3.3])
   - shut-off of the fuel supply to the oil fired heaters or of the exhaust gas supply to the exhaust gas heaters (see Ch 1, Sec 3, [5.3]).

   The shut-off of the exhaust gas supply may be ensured either by the engine shut down or by an exhaust gas bypass.

b) Such control is to be possible from the space containing the thermal oil heaters and from another position located outside such space.

13.8 Construction of thermal oil piping systems

13.8.1 Materials

a) Materials are to comply with the provisions of [11.11.1].

b) Casings of pumps, valves and fittings are to comply with the requirements mentioned in [2.1.2], item a) considering classes of piping systems as defined in [1.5.2].

13.8.2 Pipe connections

a) Pipe connections are to comply with Article [2.4] and to be suitable for the design temperature of the thermal oil system.

b) Screw couplings of a type approved by the Society may be accepted for pipes of an outside diameter not exceeding 15 mm provided they are fitted with cutting rings or equivalent arrangements.

c) The materials of the joints are to be impervious to thermal oil.

13.9 Thermal oil piping arrangements

13.9.1 Passage of thermal oil pipes through certain spaces

a) Thermal oil pipes are not to pass through accommodation or public spaces or control stations.

b) Unless they are located in tight manifolds, provided with appropriate means of internal inspection and with a leak collecting system, heat transfer oil pipes are not allowed in main and auxiliary machinery spaces specified in Ch 1, Sec 1, [3.7.4].

13.9.2 Discharge of relief valves

Relief valves are to discharge to the drain tank.

13.9.3 Provision for de-aerating

Provisions are to be made for automatic evacuation of air, steam and gases from the thermal oil system to a safe location.

14 Hydraulic systems

14.1 Application

14.1.1 Hydraulic installations intended for essential services

Unless otherwise specified, this Article applies to all hydraulic power installations intended for essential services as defined in Pt A, Ch 1, Sec 1, [1.2.1] and Ch 2, Sec 1, [3.11].

The hydraulic piping arrangement is also to comply with the provisions of:

- [5.10]
- Ch 1, Sec 7, [2.6] for clutches
- Ch 1, Sec 8, [2.6.2] for the blade pitch control system of controllable pitch propellers, and
- Ch 1, Sec 14, [2.6] for steering gears.

14.1.2 Hydraulic installations intended for non essential services

a) Hydraulic power installations not serving essential services but located in spaces where sources of ignition are present are to comply with the provisions of [5.10], [14.3.2], [14.3.3], [14.4.4], [14.4.5] and [14.5.3].

b) Additionally, hydraulic systems serving lifting or hoisting appliances, including platforms, ramps, hatch covers, lifts etc., are to comply with [14.2.2] item d).

14.1.3 Low pressure or low power hydraulic installations

Hydraulic power installations with a design pressure of less than 2,5 MPa and hydraulic power packs of less than 5 kW will be given special consideration by the Society.

14.1.4 Very high pressure hydraulic installations

Hydraulic power installations with a design pressure exceeding 35 MPa will be given special consideration by the Society.

14.2 Principles

14.2.1 Design requirements

As far as practicable, hydraulic systems are to be so designed as to:

- avoid any overload of the system
- maintain the actuated equipment in the requested position (or the driven equipment at the requested speed)
- avoid overheating of the hydraulic oil
- prevent hydraulic oil from coming into contact with sources of ignition.

14.2.2 Availability

a) As a rule, hydraulic systems are to be so designed that, in the event that any one essential component becomes inoperative, the hydraulic power supply to essential services can be maintained. Partial reduction of the propulsion capability may be accepted, however, when it is demonstrated that the safe operation of the ship is not impaired.

b) When a hydraulic power system is simultaneously serving one essential system and other systems, it is to be ensured that:
   - operation of such other systems, or
   - a single failure in the installation external to the essential system,

   is not detrimental to the operation of the essential system.

c) Hydraulic systems serving lifting or hoisting appliances, including platforms, ramps, hatch covers, lifts, etc., are to be so designed that a single failure of any component of the system may not result in a sudden undue displacement of the load or in any other situation detrimental to the safety of the ship and persons on board.

14.3 General

14.3.1 Definitions

a) A power unit is the assembly formed by the hydraulic pump and its driving motor.

b) An actuator is a component which directly converts hydraulic pressure into mechanical action.

14.3.2 Limitations of use of hydraulic oils

a) Oils used for hydraulic power installations are to have a flashpoint not lower than 150°C and be suitable for the entire service temperature range.

b) The hydraulic oil is to be replaced in accordance with the specification of the installation manufacturer.

14.3.3 Location of hydraulic power units

a) Generally, the hydraulic power units are to be located outside machinery spaces containing the boilers, main engine, its auxiliaries or other sources of ignition. See Ch 1, Sec 1, [3.7.4].

This applies in particular for hydraulic equipment delivering pressure over 15 bar to the following equipment:

- controllable pitch propellers or main transverse thrust units
- clutches
- turbine manoeuvring steam valves
- exhaust gas valves of diesel engines or gas damper control systems
- hydraulically operated valves and pumps.

b) Where demonstrated that the arrangement required in item a) is not practical, at least the following is to be provided:

- Shields or similar protections are to be fitted around such hydraulic equipment as in order to avoid any accidental oil spray or mist to the hot surfaces or other sources of ignition.
- The low level alarm required for hydraulic tanks of these circuits is to be triggered as soon as possible.
- The automatic stop of hydraulic pumps is to be operated in the same circumstances, except where this stop can lead to propulsion stop.

14.4 Design of hydraulic pumps and accessories

14.4.1 Power units

a) Hydraulic power installations are to include at least two power units so designed that the services supplied by the hydraulic power installation can operate simultaneously with one power unit out of service. A reduction of the performance may be accepted.

b) Low power hydraulic installations not supplying essential services may be fitted with a single power unit, provided that alternative means, such as a hand pump, are available on board.

14.4.2 Pressure reduction units

Pressure reduction units used in hydraulic power installations are to be duplicated.

14.4.3 Filtering equipment

a) A device is to be fitted which efficiently filters the hydraulic oil in the circuit.

b) Where filters are fitted on the discharge side of hydraulic pumps, a relief valve leading back to the suction or to any other convenient place is to be provided on the discharge of the pumps.

14.4.4 Provision for cooling

Where necessary, appropriate cooling devices are to be provided.

14.4.5 Provision against overpressure

a) Safety valves of sufficient capacity are to be provided at the high pressure side of the installation.

b) Safety valves are to discharge to the low pressure side of the installation or to the service tank.

14.4.6 Provision for venting

Cocks are to be provided in suitable positions to vent the air from the circuit.

14.4.7 Provision for drainage

Provisions are to be made to allow the drainage of the hydraulic oil contained in the installation to a suitable collecting tank.

14.5 Design of hydraulic tanks and other components

14.5.1 Hydraulic oil service tanks

a) Service tanks intended for hydraulic power installations supplying essential services are to be provided with at least:

- a level gauge complying with [2.9.2]
- a temperature indicator
- a level switch complying with [14.6.2].

b) The free volume in the service tank is to be at least 10% of the tank capacity.

14.5.2 Hydraulic oil storage tanks

a) Hydraulic power installations supplying essential services are to include a storage tank of sufficient capacity to refill the whole installation should the need arise in case of necessity.

b) For hydraulic power installations of less than 5 kW, the storage means may consist of sealed drums or tins stored in satisfactory conditions.

14.5.3 Hydraulic accumulators

The hydraulic side of the accumulators which can be isolated is to be provided with a relief valve or another device offering equivalent protection in case of overpressure.

14.6 Control and monitoring

14.6.1 Indicators

Arrangements are to be made for connecting a pressure gauge where necessary in the piping system.

14.6.2 Monitoring

Alarms and safeguards for hydraulic power installations intended for essential services, except steering gear, for which the provisions of Ch 1, Sec 14 apply, are to be provided in accordance with Tab 31.

Note 1: Some departures from Tab 31 may be accepted by the Society in the case of ships with a restricted navigation notation.

Note 2: Tab 31 does not apply to steering gear.

Table 31 : Hydraulic oil systems

Symbol convention H = High, HH = High high, G = group alarm L = Low, LL = Low low, I = individual alarm X = function is required, R = remote	Monitoring		Automatic control				
			System			Auxiliary	
Identification of system parameter	Alarm	Indication	Slow-down	Shut-down	Control	Stand by Start	Stop
Pump pressure	L						
Service tank level	L **(1) (2)**						X **(2)**

(1) The low level alarm is to be activated before the quantity of lost oil reaches 100 litres or 70% of the normal volume in the tank, whichever is the less.

(2) For hydraulics cranes where no electrical system has been provided, the requirement may be waived if the level gauge, the pressure gauge and the temperature gauge indicators are always visible by the crane operator. In addition, a warning label shall be placed on the tank reminding that, prior to start any operation of the crane, the oil level is to be checked.

15 Steam systems

15.1 Application

15.1.1 Scope

This Article applies to all steam systems intended for essential and non-essential services.

Steam systems with a design pressure of 10 MPa or more will be given special consideration.

15.2 Principle

15.2.1 Availability

a) Where a single boiler is installed, the steam system may supply only non-essential services.

b) Where more than one boiler is installed, the steam piping system is to be so designed that, in the event that any one boiler is out of action, the steam supply to essential services can be maintained.

15.3 Design of steam lines

15.3.1 General

a) Every steam pipe and every connected fitting through which steam may pass is to be designed, constructed and installed such as to withstand the maximum working stresses to which it may be subjected.

b) When the design temperature of the steam piping system exceeds 400°C, calculations of thermal stresses are to be submitted to the Society as specified in [2.3].

c) Steam connections on boilers and safety valves are to comply with the applicable requirements of Ch 1, Sec 3.

15.3.2 Provision against overpressure

a) If a steam pipe or fitting may receive steam from any source at a higher pressure than that for which it is designed, a suitable reducing valve, relief valve and pressure gauge are to be fitted.

b) When, for auxiliary turbines, the inlet steam pressure exceeds the pressure for which the exhaust casing and associated piping up to the exhaust valves are designed, means to relieve the excess pressure are to be provided.

15.3.3 Provision for dumping

In order to avoid overpressure in steam lines due to excessive steam production, in particular in systems where the steam production cannot be adjusted, provisions are to be made to allow the excess steam to be discharged to the condenser by means of an appropriate dump valve.

15.3.4 Provision for draining

Means are to be provided for draining every steam pipe in which dangerous water hammer action might otherwise occur.

15.3.5 Steam heating pipes

a) When heating coils are fitted in compartments likely to contain either fuel oil or liquid or dry cargoes, arrangements such as blind flanges are to be provided in order to disconnect such coils in the event of carriage of dry or liquid cargoes which are not to be heated.

b) The number of joints on heating coils is to be reduced to the minimum consistent with dismantling requirements.

15.3.6 Steam lines in cargo holds

a) Live and exhaust steam pipes are generally not to pass through cargo holds, unless special provisions are made with the Society's agreement.

b) Where steam pipes pass through cargo holds in pipe tunnels, provision is to be made to ensure the suitable thermal insulation of such tunnels.

c) When a steam smothering system is provided for cargo holds, provision is to be made to prevent spurious damage of the cargo by steam or condensate leakage.

15.3.7 Steam lines in accommodation spaces

Steam lines are not to pass through accommodation spaces, unless they are intended for heating purposes.

15.3.8 Turbine connections

a) A sentinel valve or equivalent is to be provided at the exhaust end of all turbines. The valve discharge outlets are to be visible and suitably guarded if necessary.

b) Bled steam connections are to be fitted with non-return valves or other approved means to prevent steam and water returning to the turbines.

15.3.9 Strainers

a) Efficient steam strainers are to be provided close to the inlets to ahead and astern high pressure turbines or, alternatively, at the inlets to manoeuvring valves.

b) Where required by the manufacturer of the auxiliaries, steam strainers are also to be fitted in the steam lines supplying these auxiliaries.

16 Boiler feed water and condensate systems

16.1 Application

16.1.1 This Article applies to:

- feed water systems of oil fired and exhaust gas boilers
- steam drain and condensate systems.

16.2 Principle

16.2.1 General

Boiler feed water and condensate systems are to be so designed that:

- reserve feed water is available in sufficient quantity to compensate for losses
- feed water is free from contamination by oils or chlorides
- feed water for propulsion systems is suitably de-aerated.

16.2.2 Availability

a) Feed water systems are to be so designed that, in the event of failure of any one component, the steam supply to essential services can be maintained or restored.

b) Condensate systems are to be so designed that, in the event of failure of:
   - one condensate pump, or
   - the arrangements to maintain vacuum in the condenser,

   the steam supply to essential services can be maintained. Partial reduction of the propulsion capability may be accepted.

16.3 Design of boiler feed water systems

16.3.1 Number of feed water systems

a) Every steam generating system which supplies essential services is to be provided with not less than two separate feed water systems from and including the feed pumps, noting that a single penetration of the steam drum is acceptable.

b) The requirement stated in a) may be dispensed with for boilers heated exclusively by engine exhaust gases or by steam for which one feed system is considered as sufficient, provided an alternative supply of steam is available on board.

c) Each boiler is to be provided with feed regulators as specified in Ch 1, Sec 3, [3.2.9].

16.3.2 Feed pumps

a) The following pumps are to be provided:
   - at least one main feed pump of sufficient capacity to supply the boilers under nominal conditions, and
   - one standby feed pump.

b) The capacity of the standby pump may be less than that of the main feed pumps provided it is demonstrated that, taking into account the reduction of the propulsion capability, the ship remains safely operable.

c) Main feed pumps may be either independent or driven by the main turbines. The standby feed pump is to be independent.

d) In twin-screw ships in which there is only one independent feed pump, each main turbine is to be fitted with a driven pump. Where all feed pumps are independent, they are to be so arranged as to be capable of dealing with the feed water necessary to supply steam either to both turbines or to one turbine only.

e) Independent feed pumps for main boilers are to be fitted with a delivery control and regulating system.

f) Unless overpressure is prevented by the feed pump characteristics, means are to be provided which will prevent overpressure in the feed water system.

g) The pressure head of feed pumps is to take into account the maximum service pressure in the boiler as well as the pressure losses in the discharge piping. The suction head of feed pumps is to be such as to prevent cavitation as far as possible.

h) Feed pumps and pipes are to be provided with valves so arranged that any one pump can be overhauled while the boilers are operating at full load.

16.3.3 Harbour feed pumps

a) Where main turbine driven pumps are provided and there is only one independent pump, a harbour feed pump or an ejector is to be fitted in addition to provide the second means for feeding the boilers which are in use when the main turbine is not working.

b) The harbour feed pump may be used for the general service of the ship, but in no case is this pump to be used to convey liquid fuel, lubricating oil or oily water.

c) The suction pipes of the harbour feed pump from the hotwell, from reserve feed water tanks and from filters are to be fitted with non-return valves.

16.3.4 Feed water tanks

a) All ships fitted with main boilers or auxiliary boilers for essential services are to be provided with reserve feed water tanks.

b) Boilers are to be provided with means to supervise and control the quality of the feed water. Suitable arrangements are to be provided to preclude, as far as practicable, the entry of oil or other contaminants which may adversely affect the boiler.

c) Feed water tanks are not to be located adjacent to fuel oil tanks. Fuel oil pipes are not to pass through feed water tanks.

d) For main boilers, one or more evaporators are to be provided, the capacity of which is to compensate for the losses of feed water due to the operation of the machines, in particular where the fuel supplied to the boilers is atomised by means of steam.

16.3.5 Provision for de-aerating feed water

A de-aerator is to be provided to ensure the de-aeration of the feed water intended for main boilers before it enters such boilers.

16.4 Design of condensate systems

16.4.1 Condensers

a) Appropriate arrangements, such as air ejectors, are to be provided to maintain vacuum in the main condenser or restore it to the required value.

b) Cooling of the main condenser is to comply with the provisions of [10.3.5].

16.4.2 Condensate pumps

a) Condensate pumps are to include at least:
   - one main condensate pump of sufficient capacity to transfer the maximum amount of condensate produced under nominal conditions, and
   - one independently driven standby condensate pump.

b) The standby condensate pump may be used for other purposes.

16.4.3 Condensate observation tanks

Any condensate from the steam heating pipes provided for fuel oil tanks and bunkers, cargo tanks and fuel oil or lubricating oil heaters is to be led to an observation tank or some other device of similar efficiency located in a well-lighted and readily accessible position.

16.5 Control and monitoring

16.5.1 General

The provisions of this sub-article apply only to feed water and condensate systems intended for propulsion.

16.5.2 Monitoring

Alarms and safeguards are to be provided for feed water and condensate systems in accordance with Tab 32.

Note 1: Some departures from Tab 32 may be accepted by the Society in the case of ships with a restricted navigation notation.

16.5.3 Automatic controls

Automatic level control is to be provided for:

- de-aerators,
- condensers.

Table 32 : Boiler feed and condensate system

Symbol convention H = High, HH = High high, G = group alarm L = Low, LL = Low low, I = individual alarm X = function is required, R = remote	Monitoring		Automatic control				
			System			Auxiliary	
Identification of system parameter	Alarm	Indication	Slow-down	Shut-down	Control	Stand by Start	Stop
Sea water flow or equivalent	L						
Condenser pressure	H	local					
	HH			X			
Water level in main condenser (unless justified)	H	local					
Feed water salinity	H	local					
Feed water pump delivery pressure	L	local					
						X	
Feed water tank level	L						

16.6 Arrangement of feed water and condensate piping

16.6.1

a) Feed water pipes are not to pass through fuel oil or lubricating oil tanks.

b) Pipes connected to feed water tanks are to be so arranged as to prevent the contamination of feed water by fuel oil, lubricating oil or chlorides.

16.7 Arrangement of feed water system for shell type exhaust gas heated economizer

16.7.1 Every shell type exhaust gas heated economizer, that may be isolated from the steam piping system, is to be provided with arrangements for pre-heating and de-aeration, addition of water treatment or combination thereof to control the quality of feed water to within the manufacturer's recommendations.

17 Compressed air systems

17.1 Application

17.1.1 This Article applies to compressed air systems intended for essential services, and in particular to:

- starting of engines,
- control and monitoring.

17.2 Principle

17.2.1 General

a) As a rule, compressed air systems are to be so designed that the compressed air delivered to the consumers:
   - is free from oil and water, as necessary
   - does not have an excessive temperature.

b) Compressed air systems are to be so designed as to prevent overpressure in any part of the systems.

17.2.2 Availability

a) Compressed air systems are to be so designed that, in the event of failure of one air compressor or one air receiver intended for starting, control purposes or other essential services, the air supply to such services can be maintained. The filling connections of the compressed air receivers shall be fitted with a non-return valve.

b) The compressed air system for starting the main and auxiliary engines is to be arranged so that the necessary initial charge of starting air can be developed on board ship without external aid. If, for this purpose, an emergency air compressor or an electric generator is required, these units are to be powered by a hand-starting oil engine or a hand-operated compressor.

c) Where compressed air is necessary to restore propulsion, the arrangements for bringing main and auxiliary machinery into operation are to have capacity such that the starting energy and any power supplies for engine operation are available within 30 minutes of a dead ship condition. For definition of the "dead ship condition", see Ch 1, Sec 1, [1.4.2] and Ch 2, Sec 1, [3.4.1].

   The procedure for such condition and relevant calculation is to be submitted.

d) Where the compressed air is necessary for the air whistle or other safety services, it is to be available from two compressed air receivers. At least one of them is to be starting air receiver for main engines. The separate connection, dedicated for this purpose, is to be provided directly from the compressed air main.

17.3 Design of starting air systems

17.3.1 Air supply for starting the main and auxiliary engines

a) The total capacity of the compressed air available for starting purpose is to be sufficient to provide, without replenishment, not less than 12 consecutive starts alternating between ahead and astern of each main engine of the reversible type, and not less than 6 consecutive starts of each main non-reversible type engine connected to a controllable pitch propeller or other device enabling the start without opposite torque.

   At least 3 consecutive starts is to be possible for each engine driving electric generators and engines for other purposes. The capacity of a starting system serving two or more of the above specified purposes is to be the sum of the capacity requirements.

b) For multi-engine propulsion plants, the capacity of the starting air receivers is to be sufficient to ensure at least 3 consecutive starts per engine. However, the total capacity is not to be less than 12 starts and need not exceed 18 starts.

   Regardless of the above, for any other specific installation the number of starts may be specially considered by the Society and depending upon the arrangement of the engines and the transmission of their output to the propellers in each particular case.

17.3.2 Number and capacity of air compressors

a) Where main and auxiliary engines are arranged for starting by compressed air, two or more air compressors are to be fitted with a total capacity sufficient to supply within one hour the quantity of air needed to satisfy the provisions of [17.3.1] charging the receivers from atmospheric pressure. This capacity is to be approximately equally divided between the number of compressors fitted, excluding the emergency compressor fitted in pursuance of item c) below.

b) At least one of the compressors is to be driven independent of the main propulsion unit. The capacity of one of the said independently driven compressors or the combined capacity of independently driven compressors is not to be less than 50% of the total required in item a).

c) Where, for the purpose of [17.2.2], an emergency air compressor is fitted, this unit is to be power driven by internal combustion engine, electric motor or steam engine.

   Suitable hand starting arrangement or independent electrical starting batteries may be accepted. In the case of small installations, a hand-operated compressor of approved capacity may be accepted.

17.3.3 Number and capacity of air receivers

a) Where main engines are arranged for starting by compressed air, at least two air receivers are to be fitted of approximately equal capacity and capable of being used independently.

b) The total capacity of air receivers is to be sufficient to provide without replenishment the number of starts required in [17.3.1]. When other users such as auxiliary engine starting systems, control systems, whistle, etc. are connected to the starting air receivers, their air consumption is also to be taken into account.

   Compressed air receivers are to comply with the requirements of Ch 1, Sec 3.

17.3.4 Air supply for starting the emergency generating set

Where starting air arrangement is one of two independent means of starting required in Ch 1, Sec 2, [3.1.3] for the emergency generator, the following is to be complied with:

a) The starting air arrangement is to include a compressed air vessel, storing the energy dedicated only for starting of the emergency generator. The capacity of the compressed air available for starting purpose is to be sufficient to provide, without replenishment, at least three consecutive starts.

b) The compressed air starting systems may be maintained by the main or auxiliary compressed air receivers through a non-return valve fitted in the emergency generator space, or by an emergency air compressor which, if electrically driven, is supplied from the emergency switchboard.

c) All of these starting, charging and energy storing devices are to be located in the emergency generator space and is not to be used for any purpose other than the operation of the emergency generating set.

17.4 Design of control and monitoring air systems

17.4.1 Air supply

a) The control and monitoring air supply to essential services is to be available from two sources of a sufficient capacity to allow normal operation with one source out of service.

b) At least one air vessel fitted with a non-return valve is to be dedicated for control and monitoring purposes, unless the installation is provided with local independent mechanical control and a means for communication with the wheelhouse is permanently fitted at position of local control. For notation **AUT**, see also Pt F, Ch 3, Sec 4, [5.2.2].

c) Pressure reduction units used in control and monitoring air systems intended for essential services are to be duplicated, unless an alternative air supply is provided.

d) Failure of the control air supply is not to cause any sudden change of the controlled equipment which may be detrimental to the safety of the ship.

17.4.2 Pressure control

Arrangements are to be made to maintain the air pressure at a suitable value in order to ensure satisfactory operation of the installation.

17.4.3 Air treatment

In addition to the provisions of [17.8.3], arrangements are to be made to ensure cooling, filtering and drying of the air prior to its introduction in the monitoring and control circuits.

17.5 Design of air compressors

17.5.1 Prevention of excessive temperature of discharged air

Air compressors are to be so designed that the temperature of discharged air cannot exceed 95°C. For this purpose, the air compressors are to provided where necessary with:

- suitable cooling means
- fusible plugs or alarm devices set at a temperature not exceeding 120°C.

17.5.2 Prevention of overpressure

a) Air compressors are to be fitted with a relief valve complying with [2.5.3].

b) Means are to be provided to prevent overpressure wherever water jackets or casings of air compressors may be subjected to dangerous overpressure due to leakage from air pressure parts.

c) Water space casings of intermediate coolers of air compressors are to be protected against any overpressure which might occur in the event of rupture of air cooler tubes.

17.5.3 Crankcase relief valves

Air compressors having a crankcase volume of at least 0,6 m^3 are to be fitted with crankcases explosion relief valves satisfying the provisions of Ch 1, Sec 2, [2.3.4].

17.5.4 Provision for draining

Air compressors are to be fitted with a drain valve.

17.6 Control and monitoring of compressed air systems

17.6.1 Monitoring

Alarms and safeguards are to be provided for compressed air systems in accordance with Tab 33.

Note 1: Some departures from Tab 33 may be accepted by the Society in the case of ships with a restricted navigation notation.

17.6.2 Automatic controls

Automatic pressure control is to be provided for maintaining the air pressure in the air receivers within the required limits.

Table 33 : Compressed air systems

Symbol convention H = High, HH = High high, G = group alarm L = Low, LL = Low low, I = individual alarm X = function is required, R = remote	Monitoring		Automatic control				
			System			Auxiliary	
Identification of system parameter	Alarm	Indication	Slow-down	Shut-down	Control	Stand by Start	Stop
Compressor lubricating oil pressure (except where splash lubrication)	L						
Air pressure after reducing valves	H	local					
Starting air pressure before main shut-off valve	L **(2)**	local + R **(1)**					
Air vessel pressure	L						
(1) Remote indication is required if starting of air compressor are remote controlled, from wheelhouse for example **(2)** The low level alarm shall be set at a level to permit further main engine starting operations.							

17.7 Materials

17.7.1 Pipes and valve bodies in control and monitoring air systems and in other air systems intended for non-essential services may be made of plastic in accordance with the provisions of Ch 1, App 3.

17.8 Arrangement of compressed air piping systems

17.8.1 Prevention of overpressure

Suitable pressure relief arrangements are to be provided for all systems.

17.8.2 Air supply to compressors

a) Provisions are to be made to reduce to a minimum the entry of oil into air pressure systems.

b) Air compressors are to be located in spaces provided with sufficient ventilation.

17.8.3 Air treatment and draining

a) Provisions are be made to drain air pressure systems.

b) Efficient oil and water separators, or filters, are to be provided on the discharge of compressors, and drains are to be installed on compressed air pipes wherever deemed necessary.

17.8.4 Lines between compressors, receivers and engines

All discharge pipes from starting air compressors are to be lead directly to the starting air receivers, and all starting pipes from the air receivers to main or auxiliary engines are to be entirely separate from the compressor discharge pipe system.

17.8.5 Protective devices for starting air mains

Non-return valves and other safety devices are to be provided on the starting air mains of each engine in accordance with the provisions of Ch 1, Sec 2, [3.1.1].

18 Exhaust gas systems

18.1 General

18.1.1 Application

This Article applies to:

- exhaust gas pipes from engines and gas turbines
- smoke ducts from boilers and incinerators.

18.1.2 Principle

Exhaust gas systems are to be so designed as to:

- limit the risk of fire
- prevent gases from entering manned spaces
- prevent water from entering engines.

18.1.3 Exhaust gas pollution prevention systems

Additional requirements for the installation of exhaust gas pollution prevention systems and storage and use of chemical treatment fluids consumed in the associated process are given in Ch 1, Sec 11.

Additional requirements for the installation of onboard carbon capture and storage systems are given in Ch 1, Sec 12.

18.2 Design of exhaust systems

18.2.1 General

Exhaust systems are to be so arranged as to minimise the intake of exhaust gases into manned spaces, air conditioning systems and engine intakes.

18.2.2 Limitation of exhaust line surface temperature

a) Exhaust gas pipes and silencers are to be either water cooled or efficiently insulated where:
   - their surface temperature may exceed 220°C, or
   - they pass through spaces of the ship where a temperature rise may be dangerous.

b) The insulation of exhaust systems is to comply with the provisions of Ch 1, Sec 1, [3.7.1].

18.2.3 Limitation of pressure losses

Exhaust gas systems are to be so designed that pressure losses in the exhaust lines do not exceed the maximum values permitted by the engine or boiler manufacturers.

18.2.4 Intercommunication of engine exhaust gas lines or boiler smoke ducts

a) Exhaust gas from different engines is not to be led to a common exhaust main, exhaust gas boiler or economiser, unless each exhaust pipe is provided with a suitable isolating device.

b) Smoke ducts from boilers discharging to a common funnel are to be separated to a height sufficient to prevent smoke passing from a boiler which is operating to a boiler out of action.

18.2.5 Boilers designed for alternative oil firing and exhaust gas operation

Where boilers are designed for alternative oil firing and exhaust gas operation, the exhaust gas pipe from the engine is to be fitted with an isolating device and safety arrangements to prevent the starting of the fuel oil burning units if the isolating device is not in the closed position.

18.2.6 Exhaust gas pipe terminations

a) Where exhaust pipes are led overboard close to the load waterline, means are to be provided to prevent water from entering the engine or the ship.

b) Where exhaust pipes are water cooled, they are to be so arranged as to be self-draining overboard.

18.2.7 Control and monitoring

A high temperature alarm is to be provided in the exhaust gas manifolds of thermal oil heaters to detect any outbreak of fire.

18.3 Materials

18.3.1 General

Materials of exhaust gas pipes and fittings are to be resistant to exhaust gases and suitable for the maximum temperature expected.

18.3.2 Use of plastics

The use of non-metallic materials may be accepted in water cooled systems in accordance with the provisions of Ch 1, App 3.

18.4 Arrangement of exhaust piping systems

18.4.1 Provision for thermal expansion

a) Exhaust pipes and smoke ducts are to be so designed that any expansion or contraction does not cause abnormal stresses in the piping system, and in particular in the connection with engine turboblowers.

b) The devices used for supporting the pipes are to allow their expansion or contraction.

18.4.2 Provision for draining

a) Drains are to be provided where necessary in exhaust systems, and in particular in exhaust ducting below exhaust gas boilers, in order to prevent water flowing into the engine.

b) Where exhaust pipes are water cooled, they are to be so arranged as to be self-draining overboard.

18.4.3 Flexible hoses

The use of flexible hoses in water cooled exhaust systems will be given special consideration by the Society.

18.4.4 Silencers

Engine silencers are to be so arranged as to provide easy access for cleaning and overhaul.

19 Oxyacetylene welding systems

19.1 Application

19.1.1 This Article applies to centralised fixed plants for oxyacetylene welding installed on ships. It may also be applied, at the discretion of the Society, to other plants using liquefied gas, such as propane.

19.1.2 The acceptance of national and international standards as an alternative to the requirements of this Article may be considered by the Society on a case by case basis.

19.2 Definitions

19.2.1 Centralised plants for oxyacetylene welding

A centralised plant for oxyacetylene welding is a fixed plant consisting of a gas bottle room, distribution stations and distribution piping, where the total number of acetylene and oxygen bottles exceeds 4.

19.2.2 Gas bottle rooms

A gas bottle room is a room containing acetylene and oxygen bottles, where distribution headers, non-return and stop valves, pressure reducing devices and outlets of supply lines to distribution stations are also installed.

19.2.3 Distribution stations

Distribution stations are adequately protected areas or cabinets equipped with stop valves, pressure regulating devices, pressure gauges, non-return valves and oxygen as well as acetylene hose connections for the welding torch.

19.3 Design of oxyacetylene welding systems

19.3.1 General

Except on pontoons and service working ships, no more than two distribution stations are normally permitted.

19.3.2 Acetylene and oxygen bottles

a) The bottles are to be tested under attendance of the Society or by a body recognised by the Society.

b) Bottles with a capacity exceeding 50 litres are not permitted.

c) Bottles supplying the plant and spare bottles are to be installed in the gas bottle room. Installation within accommodation spaces, service spaces, control stations and machinery spaces is not permitted.

d) Bottles are to be installed in a vertical position and are to be safely secured. The securing system is to be such as to allow the ready and easy removal of the bottles.

19.3.3 Piping systems

a) In general, the acetylene and oxygen piping systems are to comply with the following provisions:
   - all valves and fittings as well as welding torches and associated supply hoses are to be adapted to this specific service and suitable for the conditions expected in the different parts of the system
   - acetylene piping is to be of stainless steel or copper alloy containing less than 65% copper and seamless drawn
   - oxygen piping is to be of copper or stainless steel and seamless drawn
   - the connections between the various pipe sections are to be carried out by means of butt welding. Socket-welded connections may be used on the low-pressure side of the installations. Other types of connections including threaded connections and flange connections are not permitted
   - only a minimum number of unavoidable connections are permitted provided they are located in a clearly visible position.

b) High pressure lines (i.e. lines between bottles and pressure reducing devices) are to be installed inside the gas bottle room and are to comply with the following provisions:
   - acetylene and oxygen piping and associated fittings are to be suitable for a design pressure of 30 MPa
   - a non-return valve is to be installed on the connection of each acetylene and oxygen bottle to the header
   - stop valves are to be provided on the bottles and kept shut when distribution stations are not working.

c) Low pressure lines (i.e. lines between pressure reducing devices and distribution stations) are to comply with the following provisions:
   - for low pressure lines, black steel pipes seamless drawn could be also acceptable provided that:
     - a thickness is not less than 2,5 mm when installed in the open air
     - a thickness is not less than 2,0 mm when installed indoor

- supply lines to each distribution station are to include, at the station inlet:
  - a stop valve to be kept shut when the station is not working
  - devices to protect the supply lines from backflow of gas or flame passage.

d) Safety valves are to be provided on the low pressure side of the pressure reducing devices and led to the open air at least 3 m above the deck in a safe location where no source of ignition is present.

19.4 Arrangement of oxyacetylene welding systems

19.4.1 Gas bottle rooms

a) The gas bottle room is to be located in an independent space over the highest continuous deck and provided with direct access from outside. The limiting bulkheads and decks are to be gas-tight and made of steel.

b) When the total number of gas bottles, including possible spare bottles which are not connected to the plant, does not exceed 8, acetylene and oxygen bottles may be installed in the same room. Otherwise, acetylene and oxygen bottles are to be separated by a gas-tight bulkhead.

c) The bottle room is to be adequately insulated and ventilated so that the temperature inside does not exceed 40°C. If the temperature cannot be controlled by means of natural ventilation, mechanical and independent ventilation is to be provided. Air outlets are to be led at least 3 m away from ignition sources and ventilation intakes and are to be equipped with flameproof wire gauze.

d) The gas bottle room is not to be used for other services on board. Flammable oil or gas piping, except that related to the oxyacetylene welding plant, is not to be led through this room.

Note 1: On pontoons and service working ships, gas bottles may be installed on open deck in a safe position to the satisfaction of the Society. In such case, appropriate protection is to be provided:

- for gas bottles, against sunrays and atmospheric agents, by means of watertight covers,
- for the associated valves, piping and fittings, by means of steel covers, metal grids or similar devices.

Such means of protection are to be easily removable to allow bottle removal, when necessary.

When the total number of bottles exceeds 8, acetylene bottles are to be separated from oxygen bottles.

19.4.2 Distribution stations

Distribution stations are to be located in the engine room or in the workshop, in a well-ventilated position and protected against possible mechanical damage.

Note 1: On pontoons and service working ships, distribution stations may be installed in the open air, enclosed in a cabinet with a locked door, or in controlled access areas, to the satisfaction of the Society.

19.4.3 Piping

a) Piping is not to be led through accommodation or service spaces.

b) Piping is to be protected against any possible mechanical damage.

c) In way of deck or bulkhead penetrations, piping is to be suitably enclosed in sleeves so arranged as to prevent any fretting of the pipe with the sleeve.

19.4.4 Signboards

Signboards are to be posted on board the ship in accordance with Tab 34.

Table 34 : Signboards

Location of the signboard	Signboard to be posted
in the gas bottle room	diagram of the oxyacetylene plant
	“no smoking”
in way of: • bottle stop valves • distribution station stop valves	“to be kept shut when distribution stations are not working”
in way of the pressure reducing devices	indication of the maximum allowable pressure at the pressure reducing device outlet
in way of the safety valve discharge outlet	“no smoking”

20 Certification, inspection and testing of piping systems

20.1 Application

20.1.1 This Article defines the certification and workshop inspection and testing programme to be performed on:

- the various components of piping systems
- the materials used for their manufacture.

On board testing is dealt with in Ch 1, Sec 18.

20.2 Type tests of flexible hoses and expansion joints

20.2.1 General

a) Prototype test programmes are to be submitted by the manufacturer and are to be sufficiently detailed to demonstrate performance in accordance with the specified standards.

b) Prototype test programmes are to be made in accordance with recognised standards which are suitable for the intended service of the flexible hose or of an expansion joint.

c) Tests are to take into consideration the maximum anticipated in-service pressures, vibration frequencies and forces due to the installation.

d) All flexible hose assemblies or expansion joints are to be satisfactorily prototype burst tested to an international standard (see Note 1) to demonstrate that they are able to withstand a pressure not less than 4 times their design pressure without indication of failure or leakage.

Note 1: The international standards (e.g. EN or SAE standards) for burst testing of non-metallic hoses require the pressure to be increased until burst without any holding period. Burst is to occur at a pressure greater than 4 times the maximum working pressure.

20.2.2 Flexible hoses

a) For flexible hoses which are to comply with [2.6], prototype tests are to be carried out for each size of hose assembly. However, for ranges with more than 3 different diameters, the prototype tests are to be carried out for at least:

   - the smallest diameter
   - the largest diameter
   - intermediate diameters selected based on the principle that prototype tests carried out for a hose assembly with a diameter D are considered valid only for the diameters ranging between 0,5 D and 2 D.

   For fire resistance tests the specimens are to be selected in accordance with ISO 15540:2016.

b) The flexible hoses subjected to the tests are to be fitted with their connections.

c) Type approval tests are to be carried out in accordance with the prototype test programmes required in [2.6.4], including, but not limited to, the scope of testing specified in Tab 35 for metallic flexible hoses and in Tab 36 for non-metallic flexible hoses.

20.2.3 Expansion Joints

a) For the expansion joints which are to comply with [2.6], relevant type approval tests are to be carried out on a representative sampling on each type and for each pressure range.

b) The expansion joints subjected to the tests are to be fitted with their connections.

c) Type approval tests are to be carried out in accordance with the prototype test programmes required in [2.6.4], including, but not limited to, the scope of testing specified in Tab 37 for metallic expansion joints and in Tab 38 for non-metallic expansion joints.

d) Exemptions from prototype burst test may be granted for expansion joints of large diameter used on sea water lines and to large diameter expansion joints used on exhaust gas lines, except for those which are fitted directly on engines. Testing may be limited to pressure test.

Table 35 : Type tests and procedures for metallic flexible hoses depending on the application

	Burst	Pliability (bending)	Cycle test: U bend (Hoses up to 100 DN)	Cycle test: Cantilever bend (Hoses above DN 100)	Pressure and elongation	Impulse	Vibration
	ISO 10380:2012 **(1)**					**(2)**	Ch 3, Sec 6, Tab 1 **(1)**
Fuel Oil	X	X	X	X	X	**(3)**	**(4)**
Lubricating Oil	X	X	X	X	X	**(3)**	**(4)**
Hydraulic Oil	X	X	X	X	X	**(3)**	**(4)**
Thermal Oil	X	X	X	X	X	**(3)**	**(4)**
Fresh water	X	X	X	X	X	**(3)**	**(4)**
Sea water	X	X	X	X	X	**(3)**	**(4)**
Compressed air	X	X	X	X	X	**(3)**	**(4)**
Bilge	X	X	X	X	X	**(3)**	**(4)**
Exhaust Gas	X	X	X	X	X	**(3)**	**(4)**

(1) Other recognized standards may be accepted where agreed by the Society.
(2) Impulse pressure is to be raised from 0 to 1,5 times the design pressure with a frequency equal to 30-100 cycles per minute for at least 150 000 cycles.
(3) For piping systems subject to pressure pulsation.
(4) Where fitted to engines, pumps, compressors or other sources of high vibrations.

Table 36 : Type tests and procedures for non-metallic flexible hoses depending on the application

	Burst EN ISO 1402:2021 **(1)**	Fire resistance EN ISO 15540:2016 / EN ISO 15541:2016	Visual inspection and dimensional check EN ISO 4671:2022 **(1)**	Change in length EN ISO 1402:202 **(1)**	Resistance against liquid ISO 1817:2022 **(1)**	Cover adhesion EN ISO 8033:2016 **(1)**	Ozone resistance **(2)** ISO 7326:2016 **(1)**	Impulse EN ISO 6802:2018 / EN ISO 6803:2017 **(1)**	Vibration Ch 3, Sec 6, Tab 1 **(1)**	Vacuum EN ISO 7233:2016 **(1)**	Cold flexibility EN ISO 10619-2:2021 **(1)**
Fuel Oil	X	X	X	X	X	X	X	**(3)**	**(4)**	**(5)**	**(6)**
Lubricating Oil	X	X	X	X	X	X	X	**(3)**	**(4)**	**(5)**	**(6)**
Hydraulic Oil	X	X	X	X	X	X	X	**(3)**	**(4)**	**(5)**	**(6)**
Thermal Oil	X	X	X	X	X	X	X	**(3)**	**(4)**	**(5)**	**(6)**
Fresh water	X		X	X		X	X	**(3)**	**(4)**	**(5)**	**(6)**
Sea water	X	X	X	X		X	X	**(3)**	**(4)**	**(5)**	**(6)**
Compressed air	X		X	X		X	X	**(3)**	**(4)**	**(5)**	**(6)**
Bilge	X		X	X		X	X	**(3)**	**(4)**	**(5)**	**(6)**
Exhaust Gas	X		X	X		X	X	**(3)**	**(4)**	**(5)**	**(6)**

(1) Other recognized standards may be accepted where agreed by the Society.
(2) For rubber hoses only.
(3) For piping systems subject to pressure pulsation.
(4) Where fitted to engines, pumps, compressors or other sources of high vibrations.
(5) For suction hoses only.
(6) For piping systems subject to low temperature (< 0°C).

Table 37 : Type tests and procedures to be performed for metallic expansion joints

	Burst	Hydrostatic	Cyclic expansion **(1)**	Vibration
	see [20.2.1] d) **(2)**	see [20.5.6] **(2)**	EJMA Code **(3) (2)**	Ch 3, Sec 6, Tab 1 **(2)**
Fuel Oil	X		X	**(4)**
Lubricating Oil	X		X	**(4)**
Hydraulic Oil	X		X	**(4)**
Thermal Oil	X		X	**(4)**
Fresh water	X		X	**(4)**
Sea water	X		X	**(4)**
Compressed air	X		X	**(4)**
Bilge	X		X	**(4)**
Exhaust Gas		X	X	**(4)**

(1) For piping systems subject to expansion cycles.
(2) Other recognized standards may be accepted where agreed by the Society.
(3) Type test is an alternative. A test procedure is to be submitted to the Society for approval.
(4) Where fitted to engines, pumps, compressors or other sources of high vibrations.

Table 38 : Type tests and procedures for non-metallic expansion joints

	Burst	Fire resistance	Resistance against liquid	Cyclic expansion **(1)**	Ozone resistance	Impulse	Vibration
	[20.2.1], item d) **(2)**	EN ISO 15540:2016 / EN ISO 15541:2016 **(2)**	ISO 1817:2022 **(2)**	**(2) (3)**	ISO 7326:2016 **(2)**	EN ISO 6802:2018 / EN ISO 6803:2017 **(2)**	Ch 3, Sec 6, Tab 1 **(2)**
Fuel Oil	X	X	X	X	**(4)**	**(5)**	**(6)**
Lubricating Oil	X	X	X	X	**(4)**	**(5)**	**(6)**
Hydraulic Oil	X	X	X	X	**(4)**	**(5)**	**(6)**
Thermal Oil	X	X	X	X	**(4)**	**(5)**	**(6)**
Fresh water	X			X	**(4)**	**(5)**	**(6)**
Sea water	X	X		X	**(4)**	**(5)**	**(6)**
Compressed air	X			X	**(4)**	**(5)**	**(6)**
Bilge	X			X	**(4)**	**(5)**	**(6)**

(1) For piping systems subject to expansion cycles.
(2) Other recognized standards may be accepted where agreed by the Society.
(3) Test procedure is to be submitted to the Society for approval
(4) For rubber expansion joints only.
(5) For piping systems subject to pressure pulsation.
(6) Where fitted to engines, pumps, compressors or other sources of high vibrations

20.3 Type tests of air pipe closing appliances

20.3.1 Testing of air pipe automatic closing devices

Each type and size of air pipe automatic closing device is to be surveyed and type tested at the manufacturer's works or a recognized laboratory accepted by the Society. The test requirements for an air pipe automatic closing device are to include the following:

a) Determination of the flow characteristics

The flow characteristics of the air pipe closing device are to be determined.

Measuring of the pressure drop versus rate of volume flow is to be carried out using water and with any intended flame or insect screens in place.

b) Tightness test during immersion/emerging in water

An automatic closing device is to be subjected to a series of tightness tests involving not less than two immersion cycles under each of the following conditions:

- The automatic closing device is to be submerged slightly below the water surface at a velocity of approximately 4 m/min. and then returned to the original position immediately. The quantity of leakage is to be recorded.
- The automatic closing device is to be submerged to a point slightly below the surface of the water. The submerging velocity is to be approximately 8 m/min and the air pipe vent head is to remain submerged for not less than 5 minutes. The quantity of leakage is to be recorded.
- Each of the above tightness tests is to be carried out in the normal position as well as at an inclination of 40° under the strictest conditions for the device. In cases where such strictest conditions are not clear, tests are to be carried out at an inclination of 40° with the device opening facing in three different directions: upward, downward, sideways (left or right). See Fig 6 and Fig 7.

The maximum allowable leakage per cycle is not to exceed 2 ml/mm of nominal diameter of inlet pipe during any individual test.

Figure 6 : Example of normal position

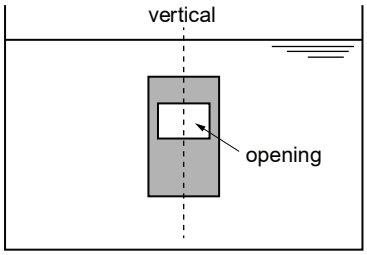

Figure 7 : Examples of inclination of 40° with different directions of the device opening

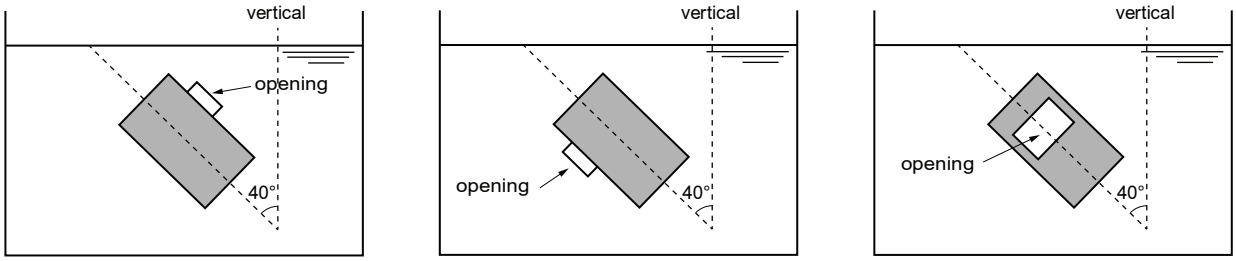

Device opening facing upward | Device opening facing downward | Device opening facing sideways

c) Discharge / Reverse flow test:

1) The air pipe head is to allow the passage of air to prevent excessive vacuum developing in the tank.

Reverse flow test:

- A reverse flow test is to be performed. A vacuum pump or another suitable device is to be connected to the opening of the air pipe leading to the tank. The flow velocity is to be applied gradually at a constant rate until the float gets sucked and blocks the flow, and
- The velocity at the point of blocking is to be recorded. A mention of 80% of the value recorded is to be stated in the type approval certificate.

2) Alternative to the reverse flow test:

- For pipe heads of 400 mm nominal diameter and above, as an alternative to the reverse flow test, a numerical simulation test based on computational fluid dynamics (CFD), to be carried out in conjunction with limited representative testing to establish the validity of the CFD modelling and results, may be accepted
- CFD predictions for air pipe heads can be validated against the available actual reverse flow test results of same size and type of air pipe heads
- The accuracy of the CFD modelling and the major assumptions used for the calculation are to be documented
- Mesh convergence studies are to be carried out and documented, and
- The velocity at the point of blocking is to be recorded. A mention of 80% of the value recorded is to be stated in the type approval certificate.

20.3.2 Testing of non-metallic floats

Impact and compression loading tests are to be carried out on the floats before and after pre-conditioning, as per Tab 39.

a) Impact test

The impact test may be conducted on a pendulum type testing machine. The floats are to be subjected to 5 impacts of 2,5 Nm each and are not to suffer permanent deformation, cracking or surface deterioration at this impact loading.

Subsequently the floats are to be subjected to 5 impacts of 25 Nm each. At this impact energy level, some localised surface damage at the impact point may occur. No permanent deformation or cracking of the floats is to appear.

b) Compression loading test

Compression tests are to be conducted with the floats mounted on a supporting ring of a diameter and bearing area corresponding to those of the float seating with which the tested float is intended to be used. For ball type float, loads are to be applied through a concave cap of the same internal radius as the test float and bearing on an area of the same diameter as the seating. For a disc type float, loads are to be applied through a disc of equal diameter as the float.

A load of 350 kg is to be applied over one minute and maintained for 60 minutes. The deflection is to be measured at intervals of 10 minutes after attachment of the full load. The record of deflection against time is to show no continuing increase in deflection and, after release of the load, there is to be no permanent deflection.

20.3.3 Testing of metallic floats

Tests are to be conducted in accordance with [20.3.2], item a) above. The tests are to be carried out at room temperature and in the dry condition.

Table 39 : Pre-conditioning of floats

Test condition	Test temperature		
	–25°C	+20°C	+85°C
Dry	+	+	+
After immerging in water	+	+	+
After immerging in fuel oil	–	+	–
Note 1: Immerging in water and fuel oil is to be for at least 48 hours.			

20.4 Testing of materials

20.4.1 General

a) Requirements for material tests are given in NR216 Materials and Welding.

b) The requirements of this Article do not apply to piping systems subjected to low temperatures, such as cargo piping of liquefied gas carriers.

20.4.2 Tests for materials

a) Where required in Tab 40, materials used for pipes, valves and other accessories are to be subjected to the following tests:
- tensile test at ambient temperature
- flattening test or bend test, as applicable
- when designed to be used at high temperatures on the basis of their high-temperature strength characteristics, a hot tensile test is to be performed on one test specimen per serie and per size, except if one of the following conditions is met:
  - the design temperature is below 200°C
  - the mechanical properties of the material at high temperature have been approved according to a recognized standard
  - the scantling of the pipes is based on reduced values of the permissible stress.

b) Plastic materials are to be subjected to the tests specified in Ch 1, App 3.

c) For piping systems included in engine, turbine or gearbox installation in contact with flammable fluids, requirements mentioned in Ch 1, Sec 1, [3.7.2] are to be applied when other materials than steel are used. Especially, piping systems might need to be tested according to ISO 19921:2005 / 19922:2005.

20.5 Hydrostatic testing of piping systems and their components

20.5.1 General

Pneumatic tests are to be avoided wherever possible. Where such testing is absolutely necessary in lieu of the hydraulic pressure test, the relevant procedure is to be submitted to the Society for acceptance prior to testing.

20.5.2 Hydrostatic pressure tests of piping

a) Hydrostatic pressure tests are to be carried out to the Surveyor's satisfaction for:
- all class I and II pipes and their integral fittings
- all steam pipes, feed water pipes, compressed air pipes, and fuel oil and other flammable oil pipes with a design pressure greater than 0,35 MPa and their associated integral fittings.

b) These tests are to be carried out after completion of manufacture and before installation on board and, where applicable, before insulating and coating.

Note 1: Classes of pipes are defined in [1.5.2].

c) Pressure testing of small bore pipes (less than 15 mm) may be waived at the discretion of the Surveyor, depending on the application.

d) Where the design temperature does not exceed 300°C, the test pressure is to be equal to 1,5 p.

e) Where the design temperature exceeds 300°C, the test pressure is to be as follows:
- for carbon and carbon-manganese steel pipes, the test pressure is to be equal to 2 p
- for alloy steel pipes, the test pressure P_H is to be determined by the following formula, but need not exceed 2 p:

$$p_H = 1{,}5\frac{K_{100}}{K_T}p$$

where:

K_{100} : Permissible stress for 100°C, as stated in Tab 11

K_T : Permissible stress for the design temperature, as stated in Tab 11.

Note 2: Where alloy steels not included in Tab 11 are used, the permissible stresses will be given special consideration.

f) Where it is necessary to avoid excessive stress in way of bends, branches, etc., the Society may give special consideration to the reduction of the test pressure to a value not less than 1,5 p. The membrane stress is in no case to exceed 90% of the yield stress at the testing temperature.

g) While satisfying the condition stated in b), the test pressure of pipes located on the discharge side of centrifugal pumps driven by steam turbines is not to be less than the maximum pressure liable to be developed by such pumps with closed discharge at the operating speed of their overspeed device.

h) Hydrostatic testing may be carried out after assembly on board of the piping sections under the conditions stated in Ch 1, Sec 18, [3.12.1].

For pressure tests of piping after assembly on board, see Ch 1, Sec 18, [3.12.1], Ch 1, Sec 18, [3.12.2] and Ch 1, Sec 18, [3.12.3].

For pressure tests of plastic pipes after assembly on board, see Ch 1, App 3, [4.9].

20.5.3 Hydrostatic tests of valves, fittings and heat exchangers

a) Valves and fittings non-integral with the piping system and intended for class I and II pipes are to be subjected to hydrostatic tests in accordance with standards recognised by the Society, at a pressure not less than 1,5 times the design pressure P defined in [1.3.2].

b) Valves and distance pieces intended to be fitted on the ship side below the load waterline are to be subjected to hydrostatic tests under a pressure not less than 0,5 MPa.

c) The shells of appliances such as heaters, coolers and heat exchangers which may be considered as pressure vessels are to be tested under the conditions specified in Ch 1, Sec 3.

d) The nests of tubes or coils of heaters, coolers and heat exchangers are to be submitted to a hydraulic test under the same pressure as the fluid lines they serve.

e) For coolers of internal combustion engines, see Ch 1, Sec 2.

20.5.4 Hydrostatic tests of fuel oil bunkers and tanks not forming part of the ship's structure

Fuel oil bunkers and tanks not forming part of the ship's structure are to be subjected to a hydrostatic test under a pressure corresponding to the maximum liquid level in such spaces or in the air or overflow pipes, with a minimum of 2,40 m above the top. The minimum height is to be 3,60 m for tanks intended to contain fuel oil with a flashpoint below 60°C.

20.5.5 Hydrostatic tests of pumps and compressors

a) Cylinders, covers and casings of pumps and compressors are to be subjected to a hydrostatic test under a pressure at least equal to the test pressure p_H, in MPa, determined by the following formulae:
- $p_H = 1{,}5\ p$ where $p \le 4$
- $p_H = 1{,}4\ p + 0{,}4$ where $4 < p \le 25$
- $p_H = p + 10{,}4$ where $p > 25$

where:

p : Design pressure, in MPa, as defined in [1.3.2].

p_H is not to be less than 0,4 MPa.

b) While satisfying the condition stated in a), the test pressure for centrifugal pumps driven by steam turbines is not to be less than 1,05 times the maximum pressure likely to be recorded with closed discharge at the operating speed of the overspeed device.

c) Intermediate coolers of compressors are to undergo a hydrostatic test under a pressure at least equal to the pressure p_H defined in a). When determining p_H, the pressure p to be considered is that which may result from accidental communication

between the cooler and the adjoining stage of higher pressure, allowance being made for any safety device fitted on the cooler.

d) The test pressure for water spaces of compressors and their intermediate coolers is not to be less than 1,5 times the design pressure in the space concerned, subject to a minimum of 0,2 MPa.

e) For air compressors and pumps driven by internal combustion engines, see Ch 1, Sec 2.

20.5.6 Hydrostatic test of flexible hoses and expansion joints

a) Each flexible hose or expansion joint, together with its connections, is to undergo a hydrostatic test under a pressure at least equal to 1,5 times the maximum service pressure.

b) During the test, the flexible hose or expansion joint is to be repeatedly deformed from its geometrical axis.

20.6 Testing of piping system components during manufacturing

20.6.1 Pumps

a) Bilge and fire pumps are to undergo a performance test.

b) Rotors of centrifugal feed pumps for main boilers are to undergo a balancing test.

20.6.2 Centrifugal separators

Centrifugal separators used for fuel oil and lubricating oil are to undergo a running test, normally with a fuel water mixture.

20.7 Inspection and testing of piping systems

20.7.1 The inspections and tests required for piping systems and their components are summarised in Tab 40.

Table 40 : Inspection and testing at works for piping systems and their components

Item **(5)**		Tests for the materials **(1)**		Inspections and tests for the product **(1)**		
		Tests required **(7)**	Type of material certificate **(2)**	During manufacturing (NDT)	After completion	Type of product certificate **(2)**
Raw pipes	class I, ND ≥ 50 class II, ND ≥ 100	[20.4.2]	C **(3)**	[3.6.2], [3.6.3] **(4)**	[20.5.3]	C **(3)**
	class I, ND < 50 class II, ND < 100		W			W **(3)**
Valves and fittings	class I, ND ≥ 50 class II, ND ≥ 100	[20.4.2]	C	[3.6.2], [3.6.3] **(4)**	[20.5.3]	C **(3)**
	class I, ND < 50 class II, ND < 100		W			C **(3)**
Pipes, valves and fittings connected to: • the ship side • the collision bulkhead • fuel oil and lubricating oil tanks and under static pressure	ND ≥ 100	[20.4.2]	C **(3)**	[3.6.2], [3.6.3] **(4)**	[20.5.3], b)	C **(3)**
	ND < 100		W			
Flexible hoses and expansion joints		[20.4.2]	W		[20.5.6]	C **(3)**

Item **(5)**		Tests for the materials **(1)**		Inspections and tests for the product **(1)**		
		Tests required **(7)**	Type of material certificate **(2)**	During manufacturing (NDT)	After completion	Type of product certificate **(2)**
Pumps and compressors within piping systems covered by Sections of Part C, Chapter 1 **(9)**	when belonging to a class I piping system	[20.4.2]	C **(3)**		[20.5.5]	C **(3)**
	when belonging to a class II piping system	[20.4.2]	W		[20.5.5]	C **(3)**
	bilge and fire pump	[20.4.2]	W		[20.5.5] [20.6.1], a)	C **(3)**
	feed pumps for main boilers	[20.4.2]	C **(3)**	[3.6.2], [3.6.3] **(4) (8)**	[20.5.5] [20.6.1], b)	C **(3)**
	forced circulation pumps for main boilers	[20.4.2]	C **(3)**		[20.5.5]	C **(3)**
	when belonging to one of the following class III piping systems if design pressure exceeds 0,35 MPa: • boiler feed water or forced circulating • fuel oil or other flammable oil • compressed air	[20.4.2]	W		[20.5.5]	C **(3)**
	when belonging to other class III piping systems				[20.5.5]	W
Centrifugal separators					[20.6.2]	C **(3)**
Prefabricated pipeline	classes I and II with ND ≥ 65 or t ≥ 10			[3.6.2], [3.6.3] **(6)**	[20.5.2]	C **(3)**
	classes I and II with ND < 65 or t < 10			[3.6.2], [3.6.3] **(6)**	[20.5.2]	W
	class III where design pressure exceeds 0,35 MPa, as follows: • steam pipes and feed water pipes • compressed air pipes • fuel oil or other flammable oil pipes				[20.5.2]	W

(1) [x.y.z] = test required, as per referent regulation. In general, the material are to comply with [2.1.2]
(2) "C" indicates that a Society certificate is required. "W" indicates that a manufacturer's document is required. See NR216 Materials and Welding, Ch 1, Sec 1, [4.2]
(3) Or alternative type of certificate, depending on the Survey Scheme. See NR320 Certification scheme of materials and equipment.
(4) If of welded construction.
(5) ND = Nominal diameter of the pipe, valve or fitting, in mm.
Class of piping systems is to be determined in accordance with [1.5.2].
(6) For welded connections.
(7) Where required by the table, material tests are to be carried out for the components subject to pressure, such as valve body, pump and compressor casings, etc. They are also to be carried out for the assembling bolts of feed water pumps and forced circulating pumps serving main boilers. Requirements for material testing are detailed in NR 216 Materials and Welding, Ch 2, Sec 2.
(8) For main parts, before assembling.
(9) For other pumps and compressors, see additional Rules relevant for related system.

Section 11 Exhaust Gas Pollution Prevention System

1 General

1.1 Application

1.1.1 This Section applies to installation, storage of chemical treatment fluids, piping system and equipment dedicated to the treatment of exhaust gas.

1.1.2 The requirements of this Section are additional to those of Ch 1, Sec 10, [18].

1.1.3

a) Requirements for exhaust gas pipes from engines, gas turbines, boilers and incinerators are given in Ch 1, Sec 10, [18].

b) General requirements applying to the installation of any exhaust gas pollution prevention system are contained in Article [2].

c) Additional requirements for the storage and use of urea as reductant in SCR are given in Article [3].

d) Additional requirements for the storage and use of sodium hydroxide (NaOH) or calcium hydroxide ($Ca(OH)_2$) in exhaust gas cleaning system - scrubbers are given in Article [4].

e) Additional requirements for any other chemical treatment fluids used in exhaust gas are given in Article [5].

1.1.4 When an onboard carbon capture and storage system is installed, the ship is to comply with the requirements of Ch 1, Sec 12.

1.2 Definitions

1.2.1 Exhaust gas pollution prevention system

Exhaust gas pollution prevention system means any system including scrubber (or exhaust gas cleaning system), SCR (selective catalytic Reduction) and EGR (Exhaust Gas Recirculation), used to reduce polluting emissions from the exhaust gas.

1.2.2 Chemical treatment fluid

Unless otherwise specified, chemical treatment fluid means any chemical consumed in a process for the treatment of exhaust gas.

1.2.3 Exhaust gas cleaning system (EGCS)

EGCS refers to SOx scrubbers' complete installation, including:

- a scrubbing vessel, used to remove sulphur content from the exhaust of marine engines or boilers,
- a treatment plant to manage the washwater after the scrubbing process, and
- a sludge management system (a holding tank with outboard discharge to port facilities).

1.2.4 Selective catalytic reduction (SCR) equipment

SCR means equipment used to reduce NOx emissions from the exhaust of marine engines using selective catalytic reduction process.

1.2.5 Exhaust gas recirculation (EGR)

EGR means exhaust gas recirculation, i.e. a means method used to reduce NOx emissions at the exhaust of marine engines at the source using partial recirculation of the exhaust gas to the engine air inlet.

1.3 Documents to be submitted

1.3.1 The documents listed in Tab 1 are to be submitted.

In case of a retrofit, all drawings showing modifications related to the exhaust gas pollution prevention system installation are to be submitted. Especially, attention is drawn on the documents listed in Tab 2.

Table 1 : Documents to be submitted

No.	I/A (1)	Document (2)
1	A	General arrangement of the exhaust gas pollution prevention system
2	A	Diagrams of sea water and / or fresh water piping systems (3)
3	A	Diagram of washwater treatment and sludge piping systems (3)
4	A	Diagram of chemical piping system, including filling, storage and dosing (3)
5	I	Risk analysis report covering a failure of the exhaust gas pollution prevention system, a leakage of washwater, sludge or chemical, or a fire, as detailed in [2.3.1], [2.4.3], [3.1.1] or [5] when applicable
(1) A = to be submitted for approval ; I = to be submitted for information (2) Diagrams are also to include, where applicable, the (local and remote) control and monitoring systems and automation systems (3) Where applicable, depending on the design of the exhaust gas pollution prevention system		

Table 2 : Documents to be submitted in case of a retrofit

No.	I/A (1)	Document
1	I	General arrangement and Machinery general arrangement
2	A	Fire control plan
3	A	Damage control plan, damage stability booklet and tank capacity plan
4	A	Ventilation, extinction and detection
5	A	Power supply arrangement
6	A	Single line diagram of the control system
7	A	List of alarms and monitored parameters and safety systems
8	I	Test program of the control system
9	I	Ship electrical power balance
10	I	Instruction and operation manuals
11	A	Diagram of scrubber installation, fixation diagram, strength calculation for scrubber transverse supports
12	A	Structural modification (Holes and Penetrations drawing, modification of the Sea Chest, Funnel and Casing)
13	A	Diagrams of the exhaust gas pollution prevention system and exhaust gas piping
14	A	Pressure losses calculation in the exhaust line
15	A	Diagram of ancillaries system modification (compressed air, ventilation,…)
16	A	Diagram of the tanks vent system
17	A	Diagram of the bilge system
18	A	Filling up piping system for chemical products and storage of the product and preparation/handling of the product
19	I	Risk analysis (availability of essential systems of ship related to failure of exhaust gas pollution prevention system, use of chemical products)
20	A	Exhaust gas boiler modification
21	I	Test program and reports
(1) A: To be submitted for approval ; I: To be submitted for information.		

2 Installation requirements

2.1 General

2.1.1 Exhaust gas pollution prevention systems are to be designed, arranged and installed in accordance with the following requirements.

EGCS are to be tested in accordance with the requirements of [2.5], under the survey and to the satisfaction of the Society's Surveyor.

2.2 Installation requirements

2.2.1 Design

Attention is drawn on IMO Guidelines regarding the environmental performance of equipment such as ECGS and SCR systems.

For ships with the additional class notation **EGCS-SCRUBBER**, the provisions of Pt F, Ch 9, Sec 7, [2] are to be complied with.

2.2.2 Tank design and construction requirements are given in Pt B, Ch 2, Sec 2, [10].

2.2.3 The chemical treatment fluids tanks are to be included in the ship's stability calculation.

2.2.4 Additional requirements about retention of treatment water on board are to be fulfilled in case **CLEANSHIP** notation is granted (see Pt F, Ch 9, Sec 2, [2.10]).

2.3 Availability

2.3.1 The availability of the machinery served by the exhaust gas pollution prevention system is to be substantiated by a risk analysis.

The exhaust gas pollution prevention equipment is to be so arranged that, in the case of failure of such equipment, propulsion power and auxiliary power supplying essential functions are not affected. Where necessary, a bypass is to be installed.

In case of blackout, automatic starting of engines, if provided, is to remain effective as if no exhaust gas pollution prevention system were installed and not detrimental to the exhaust gas pollution prevention installation.

2.4 Arrangement

2.4.1 Exhaust systems connections

As mentioned in Ch 1, Sec 10, [18.2.4], no interconnection is permitted between different exhaust piping systems for engines. In case of one exhaust gas pollution prevention system used for several installations, interconnections may be acceptable with additional devices installed as follows:

- Individual isolating devices for exhaust pipes are to be provided on each individual exhaust pipe; and
- Forced ventilation is to be installed at the outlet of the common exhaust pipe, preventing any backflow of exhaust gases in individual exhaust ducts in any possible working conditions.

  As an alternative to forced ventilation, exhaust systems interconnections might be accepted on a case-by-case basis and considering an exhaust gas back pressure analysis according to the guidance given in Ch 1, App 7, to the satisfaction of the Society.

2.4.2 Bypass

When the exhaust gas pollution prevention system may be bypassed, proper means are to be installed providing double barrier upstream from the exhaust gas pollution prevention system, in order to enable safe inspection in exhaust gas pollution prevention equipment in any working configuration of combustion units.

For a SCR, the requirements about having a double barrier is to be disregarded provided that a label mentioning “Do not open when engine in operation” is visible on the SCR.

2.4.3 Filling systems for chemical treatment fluids

Filling systems for chemical treatment fluids are to be located in places where no interference with other ship activities would happen. In case interference is unavoidable, a risk analysis is to be provided in order to evaluate occurrence and level of danger for crew and passengers if any.

Drainage of coamings if any and outlet of safety valves are to be led to a tank designed for that purpose.

2.4.4 Materials

Materials used for equipment and piping systems are to be suitable with fluids conveyed, not leading to early corrosion or creating hazardous gases when in contact with treatment liquid or vapours. This requirement is also valid for drip trays, fans and ducts being part of exhaust gas pollution prevention system.

2.4.5 Discharge water piping

Piping intended to convey discharge water from exhaust gas pollution prevention systems are to be protected against corrosion either by selection of their constituent materials or by an appropriate coating or treatment, with due consideration of the expected composition and acidity of the discharge water. In addition, the distance piece between the overboard discharge valve and the shell plating is to have at least extra-reinforced wall thickness as defined in Ch 1, Sec 10, Tab 6.

Attention is also drawn on distance piece thickness survey requirements given in Pt A, Ch 3, Sec 1, [3.1.6].

The discharge outlet is to be widely separated from the ship seawater inlet. In addition, surfaces of the hull, seachests, and hull appendages in the vicinity of the discharge outlet are to be suitably protected against the corrosive effects of low pH discharge water.

2.4.6 Control and monitoring

Alarms and indications are to be provided in accordance with Tab 3.

For ships to be granted an **AUT** additional class notation, those alarms and indications are to be provided at the centralised control position, see Pt F, Ch 3, Sec 1, [4.8.9].

Information related to exhaust gas pollution prevention device and washwater, discharge measurements is to be made available in a control station.

2.5 Certification, Inspection and testing

2.5.1 EGC unit tower

Welded joints are to be made in accordance with qualified welding procedures by qualified welders. Welder's certificates, welding procedures and their qualification records are to be submitted to the Society for review.

Welded joints, including the inside wherever possible, are to be visually examined by the manufacturer.

Magnetic particle or liquid penetrant testing is to be performed on welded joints selected according to manufacturer's plan.

2.5.2 Inspection and testing of EGCS components

Inspection and testing of EGCS components are defined in Tab 4.

Table 3 : Control and monitoring for exhaust gas pollution prevention systems

Symbol convention H = High, HH = High high, G = group alarm L = Low, LL = Low low, I = individual alarm X = function is required, R = remote	Monitoring		Automatic control				
			System			Auxiliary	
Identification of system parameter	Alarm	Indication	Slow-down	Shut-down	Control	Stand by Start	Stop
Failure of exhaust fans (each fan)	X						
Exhaust temperature before entering in plastic parts or Cooling medium flow	H L	local local					
Chemical treatment fluids storage tank level **(1)**	H **(2)**	local **(2)**					
(1) Not applicable to process tanks **(2)** High level alarm is to be independent from the tank level indicator.							

Table 4 : Inspection and testing at works for EGCS components

Item	Tests for the materials **(1)**		Inspections and tests for the product **(1)**		
	Tests required **(2)**	Type of material certificate **(3)**	During manufacturing (NDT)	After completion	Type of product certificate **(3)**
Water pumps				Ch 1, Sec 10, [20.5.5]	W
Treatment chemical pumps	Ch 1, Sec 10, [20.4.2]	W		Ch 1, Sec 10, [20.5.5]	C **(4)**
EGC unit tower		W	[2.5.1]		C **(4)**
(1) [x.y.z] = test required, as per referent regulation. In general, the material are to comply with Ch 1, Sec 10, [2.1.2] **(2)** Where required by the table, material tests are to be carried out for the components subject to pressure, such as valve body, pump and compressor casings, etc. Requirements for material testing are detailed in NR 216 Materials and Welding **(3)** C = class certificate ; W = works' certificate (see NR216 Materials and Welding, Ch 1, Sec 1, [4.2]) **(4)** Or alternative type of certificate, depending on the Survey Scheme. See NR320 Certification scheme of materials and equipment					

3 Storage and use of SCR reductant

3.1 Application

3.1.1 The following requirements apply to urea/water solutions used in SCR. However, the requirements [3.2.3], [3.2.5], [3.3.1], [3.3.2] and [3.5.1] do not apply to daily tanks and buffer tanks with a volume below 500L.

For other reductants falling in the scope of IMDG Code like aqueous ammonia or anhydrous ammonia, the following conditions are to be fulfilled:

- It is to be demonstrated that the use of urea based reductant is not practicable and, in case of use of anhydrous ammonia, that the use of aqueous ammonia is not practicable either

Note 1: It is reminded that use of anhydrous ammonia may require the agreement of the Flag Administration.

- A risk analysis is to be provided regarding the loading, carriage and use of the product
- Requirements mentioned in Article [5] are to be fulfilled.

3.2 Storage tank

3.2.1 The storage tank is to be arranged so that any leakage will be contained and prevented from making contact with heated surfaces. All pipes or other tank penetrations are to be provided with manual closing valves attached to the tank.

3.2.2 The storage tank may be located in the engine room.

3.2.3 Each urea storage tank is to be provided with temperature and level monitoring arrangements. High and low level alarms together with high and low temperature alarms are also to be provided.

3.2.4 Where urea based ammonia solution is stored in integral tanks, these tanks are to be coated with appropriate anti-corrosion coating and are not to be located adjacent to any fuel oil or fresh water tank.

3.2.5 Urea storage tanks are to be arranged so that they can be emptied of urea and ventilated by means of portable or permanent systems.

3.3 Ventilation

3.3.1 If a urea storage tank is installed in a closed compartment, the area is to be served by an effective mechanical ventilation system of the extraction type providing not less than 6 air changes per hour. This ventilation system is to be independent from the ventilation systems of accommodation, service spaces, or control stations. The ventilation system is to be capable of being controlled from outside the compartment. A warning notice requiring the use of such ventilation before entering the compartment is to be provided outside the compartment adjacent to each point of entry.

Alternatively, where a urea storage tank is located within an engine room, a separate ventilation system is not required when the general ventilation system for the space is arranged so as to provide an effective movement of air in the vicinity of the storage tank and is maintained in operation continuously except when the storage tank is empty and has been thoroughly ventilated.

3.3.2 The requirements specified in [3.3.1] also apply to closed compartments normally entered:

- when they are adjacent to the urea integral tanks and there are possible leak points (e.g. manhole, fittings) from these tanks; or
- when the urea piping systems pass through these compartments, unless the piping system is made of steel or other equivalent material with melting point above 925°C and with fully welded joints.

3.4 Piping

3.4.1 The reductant piping and venting systems are to be independent of other ship service piping and/or systems. Reductant piping systems are not to be located in accommodation, service spaces, or control stations. The vent pipes of the storage tank are to terminate in a safe location on the weather deck and the tank venting system is to be arranged to prevent entrance of water into the urea tank.

3.5 Materials

3.5.1 Reductant tanks are to be of steel or other equivalent material with a melting point above 925°C. Pipes/piping systems are to be of steel or other equivalent material with melting point above 925°C, except downstream of the tank valve, provided this valve is metal seated and arranged as fail-to-closed or with quick closing from a safe position outside the space in the event of fire. In such case, type approved plastic piping may be accepted even if it has not passed a fire endurance test.

Reductant tanks and pipes/piping systems are to be made with a material compatible with the reductant or coated with appropriate anti-corrosion coating.

Copper is to be avoided for equipment and piping systems in contact with fluids containing ammonia.

3.6 Protection of crew members

3.6.1 For the protection of crew members, the ship is to have on board suitable personnel protective equipment. Eyewash are to be provided, the location and number of these eyewash stations are to be derived from the detailed installation arrangements.

4 Chemical treatment fluids used for exhaust gas cleaning systems

4.1 Application

4.1.1 The following requirements apply to sodium hydroxide (NaOH) or calcium hydroxide ($Ca(OH)_2$)) used in exhaust gas cleaning system, which are carried on board in bulk.

4.2 Storage tank

4.2.1 The storage tank for chemical treatment fluids is to be arranged so that any leakage will be contained and prevented from making contact with heated surfaces. All pipes or other tank penetrations are to be provided with manual closing valves attached to the tank.

In cases where such valves are provided below the top of tank, they are to be arranged with quick acting shut-off valves capable of being remotely operated from a position accessible even in the event of chemical treatment fluid leakages.

4.2.2 The storage tank may be located in the engine room.

4.2.3 Each storage tank for chemical treatment fluids is to be provided with level monitoring arrangements and high/low level alarms. In cases where heating and/or cooling systems are provided, high and/or low temperature alarms or temperature monitoring are also to be provided accordingly.

4.2.4 The storage tanks are to have sufficient strength to withstand a pressure corresponding to the maximum height of a fluid column in the overflow pipe, with a minimum of 2,4 m above the top plate taking into consideration the specific density of the treatment fluid.

4.2.5 Where chemical treatment fluid is stored in integral tanks these tanks are to be coated with appropriate anti-corrosion coating and are to be segregated by cofferdams, void spaces, pump rooms, empty tanks or other similar spaces so as to not be located adjacent to accommodation, cargo spaces containing cargoes which react with chemical treatment fluids in a hazardous manner as well as any food stores, oil tanks and fresh water tanks.

4.2.6 Storage tanks for chemical treatment fluids are to be arranged so that they can be safely emptied of the fluids and ventilated by means of portable or permanent systems.

4.3 Ventilation

4.3.1 If a storage tank for chemical treatment fluids is installed in a closed compartment, the area is to be served by an effective mechanical ventilation system of extraction type providing not less than 6 air changes per hour which is independent from the ventilation system of other spaces. The ventilation system is to be capable of being controlled from outside the compartment. A warning notice requiring the use of such ventilation before entering the compartment is be provided outside the compartment adjacent to each point of entry.

4.3.2 If the storage tank is located in the engine room, the requirements of [4.3.1] are to be complied with, except that a separate ventilation system is not required when the general ventilation system for the space is arranged so as to provide an effective movement of air in the vicinity of the storage tank and is maintained in operation continuously except when the storage tank is empty and has been thoroughly ventilated.

4.3.3 The requirements specified in [4.3.1] also apply to closed compartments normally entered by persons:

- when they are adjacent to the integral storage tank for chemical treatment fluids and there are possible leak points (e.g. manhole, fittings) from these tanks; or
- when the treatment fluid piping systems pass through these compartments, unless the piping system is made of steel or other equivalent material with melting point above 925 °C and with fully welded joints.

4.4 Piping

4.4.1 The chemical treatment fluid piping and venting systems are to be independent of other ship service piping and/or systems. The chemical treatment fluid piping systems are not to be located in accommodation, service spaces, or control stations. The vent pipes of the storage tank are to terminate in a safe location on the weather deck and the tank venting system is to be arranged to prevent entrance of water into the tank for chemical treatment fluids.

4.4.2 Regardless of design pressure and temperature, piping systems containing chemical treatment fluids only are to comply with the requirements applicable to Class I piping systems. As far as practicable, e.g. except for the flange connections that connect to tank valves, the piping systems are to be joined by welding.

4.5 Exhaust Gas Cleaning Systems discharge water pipeline

4.5.1 Overboard discharges from exhaust gas cleaning system (EGCS) are not to be interconnected to other systems.

4.5.2 Due consideration is to be given to the location of overboard discharges with respect to vessel propulsion features, such as thrusters, propellers or to prevent any discharge water onto survival craft during abandonment.

4.5.3 The piping material for the EGCS discharge water pipeline system is to be selected based on the corrosive nature of the liquid media.

4.5.4 Special attention is to be paid to the corrosion resistivity of EGCS overboard discharge piping. Where applicable, adequate arrangements are to be provided to prevent galvanic corrosion due to the use of dissimilar metals.

4.5.5 In case distance piece is fitted between the outboard discharge valve and the shell plating, it shall be made of corrosion resistant material steel or be coated with an anti-corrosive material suitable for the operating environment. The thickness of the distance piece shall be at least the minimum values specified below:

- 12 mm in cases where complete pipe is made of corrosion resistant material steel.
- 15 mm of mild steel in cases where the inside the pipe is treated with an anticorrosive coating or fitted with a sleeve of corrosion resistant material.

4.6 Materials

4.6.1 Storage tanks, pipes/piping systems and drip trays for chemical treatment fluids which transfer undiluted chemical treatment fluids are to be of steel or other equivalent material with a melting point above 925 °C.

4.6.2 Storage tanks and pipes/piping systems for chemical treatment fluids are to be made with a material compatible with chemical treatment fluids, or coated with appropriate anti-corrosion coating.

Aluminium and zinc are to be avoided for equipment and piping systems in contact with fluids like caustic soda (NaOH).

4.7 Containment of leakage

4.7.1 The following connections are to be screened and fitted with drip trays to prevent the spread of any spillage where they are installed:

- detachable connections between pipes (flanged connections and mechanical joints, etc.)
- detachable connections between pipes and equipment such as pumps, strainers, heaters, valves
- detachable connections between equipment such as pumps, strainers, heaters, valves.

The drip trays are to be fitted with drain pipes which lead to appropriate tanks, such as residue tanks, which are fitted with high level alarm, or are to be fitted with alarms for leak detection. In cases where such tank is an integral tank, [4.2.5] is to be applied to the tank.

4.8 Protection of crew members

4.8.1 For the protection of crew members, the ship is to have on board suitable personal protective equipment (PPE). The number of PPE carried onboard is to be appropriate for the number of personnel engaged in regular handling operations or that may be exposed in the event of a failure; but in no case is there to be less than two sets available on board.

4.8.2 Personal protective equipment (PPE) is to consist of protective clothing, boots, gloves and tight-fitting goggles.

4.8.3 Eyewash and safety showers are to be provided, the location and number of these eyewash stations and safety showers are to be derived from the detailed installation arrangements. As a minimum, the following stations are to be provided:

- in the vicinity of transfer or treatment pump locations. If there are multiple transfer or treatment pump locations on the same deck then one eyewash and safety shower station may be considered for acceptance provided that the station is easily accessible from all such pump locations on the same deck.
- an eyewash station and safety shower is to be provided in the vicinity of a chemical bunkering station on-deck. If the bunkering connections are located on both port and starboard sides, then consideration is to be given to providing two eyewash stations and safety showers, one for each side.
- an eyewash station and safety shower is to be provided in the vicinity of any part of the system where a spillage/drainage may occur and in the vicinity of system connections/components that require periodic maintenance.

4.9 Safety measures against the residues which have hazardous properties

4.9.1 Tanks for residues generated from the exhaust gas cleaning process are to satisfy the following requirements:

- the tanks are to be independent from other tanks, except in cases where these tanks are also used as the over flow tanks for chemical treatment fluids storage tank.
- tank capacities are to be decided in consideration of the number and kinds of installed exhaust gas cleaning systems as well as the maximum number of days between ports where residue can be discharged ashore. In the absence of precise data, a figure of 30 days is to be used.
- where residue tanks used in closed loop chemical treatment systems are also used as the overflow tanks for chemical treatment fluids storage tank, the requirements for storage tanks apply.

5 Storage and use of other substances mentioned in IMDG Code

5.1 Application

5.1.1 For exhaust gas pollution prevention systems using chemical treatment fluids other than those mentioned in [3] and [4], the following requirements are to be followed. Additionally a risk analysis is to be conducted, in order to eliminate or mitigate the hazards to personnel brought by the use of such exhaust gas pollution prevention systems, to an extent equivalent to systems complying with Article [3] and Article [4].

5.2 Risk analysis

5.2.1 For compartment containing chemical treatment fluid tanks a risk analysis is to be provided, taking into account normal or abnormal operating conditions (failure, fluid leakage, fire) regarding human health and damage to essential equipment contained in compartment.

5.2.2 In case of use of substances classed in IMO IMDG Code in categories 1, 2.1, 3, 4.1, 4.2, 4.3, 5.1, 6.1, 8 or 9, application of IEC standard 60079-10-1 is required regarding electric installations, hazardous areas definition and ventilation, and a specific risk analysis is to be submitted.

5.3 Containment of leakage

5.3.1 In case substances mentioned in IMO IMDG Code are used in exhaust gas pollution prevention systems, drainage and/or bilge pumping of compartments where such systems are located is to be separated from ship bilge system. Retention of potential leakages using drip trays associated to spill kits is to be implemented. Draining pipes from drip trays are to be led to a tank designed for that purpose.

5.4 Storage tank

5.4.1 Chemical treatment fluids tanks are not to be contiguous with tanks containing sea water, fresh water, fuel, lubricating tanks. A ventilated cofferdam between treatment chemical tanks and above mentioned tanks is an acceptable solution. Arrangement of the ventilation system is to be in accordance with [5.5].

Chemical treatment fluids tanks are not to be located in category A machinery spaces unless a specific risk analysis, as required in [5.2], is submitted to the Society for approval.

Chemical treatment fluids tanks when located adjacent to or within a compartment used for other purposes are to be surrounded by coamings delimitating space fitted with a high level alarm.

Bilge system of this compartment may be connected to ship bilge system provided arrangements are made to isolate this bilge suction. An additional fixed pumping system is to be installed in order to pump liquid with chemical substance from bilge and inside drip trays to draining tank. Isolation means and additional pumping system are to be remotely controlled.

5.4.2 Toxic or flammable product pipes, which, if damaged, would allow the product to escape from a tank, are to be fitted with a quick closing valve directly on the tank, capable of being closed from a safe position outside the compartment involved.

5.4.3 Overflow

Overflow pipes of chemical treatment fluids tanks are to be led to a specific tank dedicated for one kind of product. If several chemical treatment fluids tanks exist for a same product, overflow tank may be common.

5.4.4 Sounding and air pipes

Sounding pipes and air pipes are to end in an open space above freeboard deck. Means in order to prevent water entry through these pipe ends in any circumstances are to be provided.

5.5 Ventilation

5.5.1 Ventilation of compartments where chemical treatment fluids are stored or used is to be of the extraction type providing not less than 6 air changes per hour. This ventilation system is to be separated from any other ventilation system. The ventilation system is to be capable of being controlled from outside the compartment. A warning notice requiring the use of such ventilation before entering the compartment is to be provided outside the compartment adjacent to each point of entry.

The ventilation system is to be included in the risk analysis requested in [5.2].

5.6 Piping

5.6.1 Piping systems involved in process are not to pass through accommodations, control stations or service spaces.

Section 12 Onboard Carbon Capture and Storage Systems

1 General

1.1 Application

1.1.1 This Section applies to ships fitted with an onboard carbon capture and storage (CCS) system intended to separate the carbone dioxide (CO_2) from the exhaust gases and store it on board.

Note 1: Such ships will be assigned the additional service feature **OCC**, as defined in Pt A, Ch 1, Sec 2, [4.16].

1.1.2 This Section addresses CCS systems where CO_2 is:

- emitted from an internal combustion engine, a boiler or a fuel cell supplied with carbon-based fuel
- separated using an absorption process with amine-based chemical solvent

Note 1: Other technologies or solvents will be considered on a case-by-case basis.

- compressed / liquefied
- stored
- offloaded.

1.1.3 This Section covers the design and installation of the CCS system, with respect to ship safety. The performance of the system is not covered. In particular, the following aspects are not addressed by this Section:

- CO_2 capture rate
- quality of the captured CO_2 for later use
- possible formation and emission of polluting substances (such as nitrosamines)
- quality of the solvent (degradation)
- solvent storage capacity
- CO_2 storage capacity.

Note 1: The attention is drawn to national or international regulations on CCS systems, concerning in particular their emissions and performance.

1.2 Documentation to be submitted

1.2.1 The documents listed in Tab 1 are to be submitted.

1.2.2 In the case where a CCS system is retrofitted to an existing ship, the documents listed in Tab 2 are to be provided in addition to those referred to in [1.2.1].

1.3 Definitions

1.3.1 Carbon capture and storage (CCS) system

The carbon capture and storage (CCS) system consists of the following:

- solvent system
- separation system
- CO_2 system.

1.3.2 CO_2 system

CO_2 system means all equipment necessary for:

- the compression and liquefaction of the CO_2
- the transfer and storage of the CO_2 and
- the offloading of CO_2

1.3.3 Fuel

Fuel in the context of this Section means a carbon-based fuel such as oil fuel, LNG, LPG, methanol or ethanol.

1.3.4 Fuel consumer

Fuel consumer means internal combustion engine, boiler or fuel cell from which CO_2 present in the exhaust gases is captured.

1.3.5 Separation system

Separation system means all equipment necessary for the separation of the CO_2 from the exhaust gases emitted by the fuel consumers. It includes in particular:

- the exhaust gas cooler
- the exhaust gas blower
- the absorber
- the desorber (regenerator or stripper).

1.3.6 Solvent / rich solvent / lean solvent / waste solvent

- Solvent means a chemical (e.g. amine-based solvent) intended for the absorption of CO_2 or an aqueous solution thereof.
- Rich solvent means the solvent which contains captured CO_2.
- Lean solvent means the solvent from which CO_2 has been separated.
- Waste solvent means the solvent that needs to be replaced due to degradation.

1.3.7 Solvent system

Solvent system means all equipment necessary for the filling, storage, transfer, cooling and heating of the clean, working and waste solvent. It includes in particular:

- pumps
- heat exchangers
- tanks.

1.3.8 Triple point

Triple point is the temperature and pressure at which a material exists simultaneously as a solid, liquid, and gas. For carbon dioxide, the triple point is –56,6 °C and 5,18 bar abs.

Table 1 : Documents to be submitted

No.	I/A **(1)**	Document **(2)**
1		CARBON CAPTURE SYSTEM **(3)**:
	A	• General arrangement
	I	• Specification with operating parameters (temperatures, pressures)
	I	• Operating manual, including operating, troubleshooting and maintenance instruction manuals, safety data sheets and details for handling of the solvent, parts list, electrical drawings, functional block diagram, pressure and instrumentation diagrams
	I	• Test program and procedures for installation and commissioning
2		EXHAUST GAS AND FLUE GAS SYSTEMS:
	A	• Diagram
	A	• Pressure loss calculation
	A	• Drawing of the exhaust gas cooler (direct contact cooler or quencher) **(4)**
	A	• Drawing of the blower, where provided **(4)**
	A	• Drawing of knock out drums, where provided **(4)**
	A	• Drawing of exhaust gas cleaning water treatment system, where provided
3		SOLVENT SYSTEM:
	A	• Diagram (including solvent filing, recovery, transfer, draining, reclaiming, sampling, discharge and tank venting)
	A	• Drawings of the absorber and desorber **(4)**
	A	• Drawings of the rich solvent / lean solvent heat exchanger **(4)**
	A	• Drawing of the reserve (clean) solvent tank and waste solvent tanks **(4)**
	A	• Drawing of buffer tanks for solvent solutions, where fitted **(4)**
	A	• Drawings of the rich solvent/ lean solvent circulating and make up pumps **(4)**

(1) A = to be submitted for approval ; I = to be submitted for information
(2) Diagrams are also to include, where applicable, the (local and remote) control and monitoring systems and automation systems including emergency shutdown arrangements
(3) Performance data of the CCS system need not be provided
(4) With material specification

No.	I/A (1)	Document (2)
4		CO_2 SYSTEM:
	A	• Diagram
	A	• Specification and drawings of the compression and liquefaction equipment (compressors, pumps, coolers, separators) **(4)**
	A	• Drawings of the CO_2 storage tank including the safety valves and their discharge, the pump if fitted and the manifold arrangement for offloading **(4)**
	A	• Specification of the means to maintain the CO_2 tank pressure and temperature within their design range and justification of the relevant capacities
5	A	Diagram of the cooling water system, including heat exchangers and pumps **(4)**
6	A	Diagram of the desorber heating system including the reboiler and its material specification
7	A	Diagram and specification of the solvent detection system
8	A	Diagram and specification of the CO_2 detection system
9	I	Report of the risk analysis

(1) A = to be submitted for approval ; I = to be submitted for information
(2) Diagrams are also to include, where applicable, the (local and remote) control and monitoring systems and automation systems including emergency shutdown arrangements
(3) Performance data of the CCS system need not be provided
(4) With material specification

Table 2 : Additional drawings to be submitted in the case where a CCS system is retrofitted to an existing ship

No	I/A (1)	Document (2)
1	A	General arrangement and machinery arrangement of the ship showing the location of the main components of the CCS system
2	I	Longitudinal strength calculations and stability calculations covering the loading conditions assuming the CCS system in operating conditions and specifying the allowable filling level of the CO_2 storage tank **(3)**
3	I	Calculations of the local structural reinforcements in way of the main components of the CCS system
4	I	Revised electrical balance
5	A	Revised steam balance
6	A	Revised compressed air and heat balances for cooling water (if cooling fresh water is used for heat exchangers)
7	A	Revised exhaust gas arrangement in engine room and casing
8		General arrangement of the electrical components:
	A	• General layout specifying the interconnection of the major electrical components of the CCS system
	A	• Ingress protection (IP) of the electrical panels and associated devices (junction boxes, electrical motors, etc.)
	A	• Interconnection diagram or document describing the link between the CCS and the ship's alarm system
9	A	List of alarms and safeties of the CCS system
10	A	Characteristics and certifications of the electrical devices added during the integration of the CCS system: electrical cables, detectors, etc.
11	A	Single line diagram showing the power electrical arrangement to supply the CCS system
12	I	Type of cables to be installed provided with the related Type Approval Certificates
13		For spaces containing CCS system components:
	A	• Diagram of the ventilation system
	A	• Diagram of the bilge system
	A	• Fire detection arrangements
	A	• Fire-extinguishing arrangements
	A	• Structural fire protection
	I	• Eye-washing showers and personal protective equipment (PPE) storage spaces

(1) A = to be submitted for approval ; I = to be submitted for information
(2) Performance data of the CCS system need not be provided
(3) The variation of the ship deadweight during the CCS operation, due to the simultaneous consumption of fuel and capture of CO_2, is to be taken into account, considering the conversion factor CF given in IMO Resolution MEPC.308 (73)

1.4 Risk analysis

1.4.1 HAZID and HAZOP analysis

And HAZID analysis is to be carried out for the whole CCS system, including:

- the solvent loading, storage and offloading installation and
- the CO_2 compression, liquefaction, storage and offloading installation.

The HAZID analysis is to cover at least the following events:

- solvent leakage
- CO_2 leakage
- failure of a CCS system component or abnormal operation.

The HAZID analysis is to address:

- the flammability of the solvent
- the toxicity of the solvent
- the toxicity and the asphyxiating effect of the carbon dioxide in case of exposure of the crew members or passengers
- the availability of propulsion and main source of power, see [2.1.4].

2 Design and construction of the carbon capture and storage system

2.1 General

2.1.1 The components of the CCS system and their associated piping systems and fittings are to be of a design and construction adequate for the intended service in accordance with the provisions of Part C, Chapter 1, in particular:

- Heat exchangers are to comply with the provisions of Ch 1, Sec 3.
- Solvent and CO_2 vapour piping systems are to comply with the provisions of Ch 1, Sec 10.
- The design of the liquid CO_2 piping system is to comply with the relevant provisions of Pt D, Ch 9, Sec 5.

2.1.2 Inclinations

The CCS system is to be so designed that it can withstand the loads corresponding to the static and dynamic inclination angles specified in Ch 1, Sec 1, [2.4.1].

2.1.3 Ambient conditions

The CCS system is to be designed for the ambient conditions specified in Ch 1, Sec 1, [2.5.1].

2.1.4 Availability

The CCS system is to be so designed that the exhaust back-pressure allowed by the fuel consumer manufacturer is not exceeded over the operating range at which the fuel consumer is intended to operate. Where necessary, an exhaust gas blower is to be installed. For internal combustion engines, see Ch 1, Sec 11, [2.4.1] and Ch 1, App 7.

Note 1: Increased exhaust back pressure may affect the engine performance, in particular its specific fuel consumption.

The CCS system is to be so designed that in case of failure of a CCS system component, the normal operation of the fuel consumer can be maintained. This is to be demonstrated by the risk analysis.

2.1.5 Arrangements for solvent replacement

Where necessary, arrangements for storage and transfer are to be made to allow the replacement of the solvent, in accordance with the operating manual of the plant.

2.2 Materials

2.2.1 Materials used in the components of the CCS system containing the solvent are to be resistant to corrosion, taking into account the exhaust gas composition, the nature of the solvent and the temperature in the concerned areas. The risk of corrosion due to the presence of impurities is to be taken into account.

2.2.2 Storage tanks and pipes / piping systems for the solvent are to be made with a material compatible with the solvent, or coated with appropriate anticorrosion coating. The melting point of the material in not to be less than 925 °C.

Note 1: Materials having lower melting point may be utilized provided their use is specially considered on a case-by-case basis in relation to the risk of fire.

2.2.3 In general, copper and aluminum as well as their alloys, zinc and galvanized steel are not to be used in any component of the CCS system in contact with the solvent.

2.2.4 Materials used in the components containing liquefied CO_2 are to comply with the provisions of Pt D, Ch 9, Sec 6.

2.2.5 Materials used in CO_2 tanks and piping system are to be suitable for the lowest temperature that may occur in service, which is defined as the saturation temperature of the CO_2 at the set pressure of the automatic safety system intended to maintain the CO_2 at a pressure above the triple point.

2.3 Design and construction of the separation system

2.3.1 Welded joints of the exhaust gas cooler, absorber and desorber shells are to be made in accordance with qualified welding procedures by qualified welders. Welder's certificates, welding procedures and their qualification records are to be submitted to the Society for review.

2.4 Design and construction of the solvent filling, storage, transfer, cooling and heating systems

2.4.1 General

The requirements of the present sub-article apply to storage tanks and piping systems containing the solvent. They also apply to the tank and piping systems intended for the storage and transfer of waste solvent

Regardless of design pressure and temperature, piping systems containing solvent are to comply with the requirements applicable to class I piping systems. Vent and drain pipes, irrespective of the service temperature, belong to class III.

2.4.2 Leakage prevention and containment

The solvent filling, storage tank and transfer system are to be arranged so that any leakage will be contained and prevented from making contact with heated surfaces. All tank pipes or other tank penetrations are to be provided with manual closing valves attached to the tank. In cases where such valves are provided below top of tank, they are to be arranged with quick acting shutoff valves which are to be capable of being remotely operated from a position remaining accessible in the event of solvent leakages.

2.4.3 Protection against high or low temperatures

The solvent storage tank is to be protected from excessively high or low temperatures applicable to the particular concentration of the solvent solution. Depending on the operational area of the ship, this may require the fitting of heating and/or cooling systems.

2.4.4 Integral tanks

The solvent may be stored in integral tanks provided they are coated with appropriate anti-corrosion coating.

Solvent tanks are to be segregated from accommodation, cargo spaces containing cargoes which react with the solvent in a hazardous manner as well as any food stores, oil tanks and fresh water tanks by cofferdams, void spaces, pump rooms, empty tanks or other similar spaces.

Solvent storage tanks are to be located aft of the collision bulkhead and forward of the after peak bulkhead.

2.4.5 Independence of piping systems

The solvent piping and venting systems are to be independent of other ship service piping and/or systems.

2.4.6 Prevention of contamination by the solvent

Means, such as pH or pressure monitoring, are to be provided to detect any contamination of the water cooling or heating system or steam heating system by the solvent through heat exchangers.

2.4.7 Use of electric heaters

When electric heaters are used to supply heat to the desorber, a safety temperature switch is to be fitted in order to avoid excessive heating. It is to be:

- independent from the automatic temperature control sensor
- designed to cut off the electrical power supply in the event of excessive temperature
- provided with manual reset.

2.4.8 Pipe connections

As far as practicable, e.g. except for the flange connections that connect to tank valves, the piping systems are to be joined by welding.

The following connections are to be screened and fitted with drip trays to prevent the spread of any spillage where they are installed:

a) detachable connections between pipes (flanged connections and mechanical joints, etc.)

b) detachable connections between pipes and equipment such as pumps, strainers, heaters, valves

c) detachable connections between equipment mentioned in item b).

2.5 Design and construction of the CO_2 separation system

2.5.1 Exhaust gas cooling and treatment

Exhaust gases are to be suitably cooled and treated so that their temperature and contaminant content (in particular SOx and NOx) are within the range required for the CO2 absorption process.

Where exhaust gas cooling is made through a Direct Contact Cooling (DCC) exchanger, it is to comply with the applicable requirements of Ch 1, Sec 11.

The discharge water from the exhaust gas cooling system is to meet the relevant quality criteria laid down in IMO Resolution MEPC.340 (77): 2021 Guidelines for exhaust gas cleaning systems.

2.5.2 Heating system

The capacity of the rich solvent heating system is to be within the range required for the CO_2 desorption process.

2.6 Design of the CO_2 compression, liquefaction and storage systems

2.6.1 Gaseous CO_2 piping

Regardless of design pressure and temperature, piping systems containing gaseous CO_2 are to comply with the requirements applicable to Class I piping systems.

Remotely closable valves are to be provided where necessary to isolate a section of the CO_2 piping system in case of leakage.

The pipes conveying gaseous captured CO_2 are to be so marked that they can be readily distinguished from any pipe containing CO_2 intended for fire extinguishing. The pipes may pass through accommodations providing that:

- they are of substantial thickness (see Ch 1, Sec 10, Tab 6)
- they are joined only by welding
- they are not fitted with drains or other openings within such spaces.

The pipes are not to pass through refrigerated spaces.

2.6.2 Liquid CO_2 storage tanks

CO_2 storage tanks are to comply with the provisions of:

- Pt D, Ch 9, Sec 4 for the tank design
- Pt D, Ch 9, Sec 7 for tank pressure and temperature control
- Pt D, Ch 9, Sec 17, [21], for tank pressure control and monitoring and safety valve arrangement.

In particular, the following requirements are to be considered:

a) The pressure and temperature of CO_2 at the triple point depend on its purity. Where the CO_2 is stored at a pressure and temperature close to the triple point, the set pressure of the tank instrumentation is to be properly adjusted in order to prevent the tank contents from changing from the liquid to the solid state.

b) With the exception of tanks designed to withstand the critical pressure of CO_2, one of the following means are to be provided to maintain the tank pressure and temperature within their design range at all times:
   - reliquefaction of CO_2 vapours
   - liquid CO_2 cooling
   - pressure accumulation.

c) Venting of the CO_2 vapours is not an acceptable means to maintain the tank pressure and temperature within their design range, except in emergency situations.

2.6.3 Compressed CO_2 storage tanks

Tanks intended for the storage of high pressure compressed CO_2 are to comply with the design principles given in Ch 4, Sec 15, [4.1.3].

2.7 Control and monitoring

2.7.1 Alarms and indications are to be provided in accordance with Tab 3.

For ships to be granted an **AUT** additional class notation, those alarms and indications are to be provided at the centralised control position, see Pt F, Ch 3, Sec 1, [4.8.12].

Table 3 : Control and monitoring for carbon capture and storage system (CSS)

Symbol convention: H = High, HH = High high, G = group alarm L = Low, LL = Low low, I = individual alarm X = function is required, R = remote	Monitoring		Automatic control				
			System			Auxiliary	
Identification of system parameter	Alarm	Indication	Slow-down	Shut-down	Control	Standby Start	Stop
Exhaust gas temperature at the absorber inlet	H + L	X					
Solvent temperature at the regenerator (stripper) inlet	H + L	X					
(1) High level alarm is to be independent from the tank level indicator							

Symbol convention: H = High, HH = High high, G = group alarm L = Low, LL = Low low, I = individual alarm X = function is required, R = remote	Monitoring		Automatic control				
			System			Auxiliary	
Identification of system parameter	Alarm	Indication	Slow-down	Shut-down	Control	Standby Start	Stop
Solvent temperature at the regenerator (stripper) outlet	H + L	X					
Solvent storage tank level	H **(1)**	X					
	L						
Solvent storage tank temperature	H	X					
	L						
Drain tank level	H **(1)**	X					
Compressed CO_2 storage tank pressure	H	X					
Liquid CO_2 storage temperature	H	X					
(1) High level alarm is to be independent from the tank level indicator							

3 Arrangement and installation of the solvent components

3.1 Solvent tanks and piping system

3.1.1 Location of the solvent piping systems

The solvent piping systems are not to be located in accommodation, service spaces, or control stations. The vent pipes of the storage tank are to terminate in a safe location on the open deck, away from passageways, ventilation inlets and outlets and from any opening to accommodation, service spaces or control stations and the tank venting system is to be arranged to prevent entrance of water into the tank for solvents.

3.1.2 Drip trays

Drip trays are to be fitted in way of the solvent system components where leakage may occur. They are to be provided with leak detection arrangements and with drain pipes which lead to dedicated drain tank. Drain tanks are to be fitted with a high level alarm. In case this dedicated drain tank is an integral tank, it is to comply with the requirements of [2.4.4].

3.1.3 Monitoring and alarms

The storage tank is to be provided with level monitoring arrangements and high/low level alarms. Additionally, high and/or low temperature alarms or temperature monitoring are also to be provided.

3.2 Absorbers

3.2.1 A common absorber may be used by several engines provided that:

- a remotely operated and effective isolation device with means for leakage detection is provided on each engine exhaust line, in order to prevent exhaust gases from an engine in operation to penetrate into an engine not in operation, which could cause corrosion damage and result in exhaust gases entering the engine compartment
- where necessary a forced ventilation is installed in accordance with Ch 1, Sec 11, [2.4.1].

3.3 Solvent leakage detection

3.3.1 Except where the liquid spill detectors required for the drip trays (see [3.1.2]) are proved to be sufficient by the risk analysis, permanently installed solvent vapour detectors are to be fitted in all enclosed spaces where a leakage from the solvent system is likely to occur, as evidenced by the risk analysis.

3.3.2 The detection of solvent liquid or vapour leakage is to activate an alarm and the automatic closing of an isolating valve located outside the space where the leakage has occurred.

3.3.3 The solvent vapour detectors are to be located in areas where the solvent may accumulate.

3.3.4 Two portable solvent vapour detection equipment are to be available on board the ship.

3.4 Bilge system and scuppers

3.4.1 Bilge and scuppers lines from spaces containing a potential source of solvent leakage are to be independent from bilge lines serving other spaces.

3.4.2 Bilge water and drained water from spaces containing a potential source of solvent leakage is to be retained on board in dedicated holding tanks for subsequent discharge to reception facilities.

3.5 Ventilation

3.5.1 Enclosed spaces where solvent storage tanks are installed are to be served by an effective mechanical ventilation system of the extraction type providing not less than 6 air changes per hour. This ventilation system is to be independent from the ventilation systems serving accommodation, service spaces, or control stations. The ventilation system is to be capable of being controlled from outside the space. A warning notice requiring the use of such ventilation before entering the space is to be provided outside the compartment adjacent to each point of entry.

3.5.2 The provisions of [3.5.1] also apply to the following spaces, if normally entered.

a) spaces adjacent to the integral solvent storage tanks and containing possible leak points (e.g. manhole, fittings) from these tanks

b) spaces containing solvent piping systems, unless they have fully welded joints.

3.5.3 Where the solvent storage tank is located within the engine room, a separate ventilation system, as per [3.5.1] is not required when the general ventilation system for the space providing not less than 6 air changes per hour is arranged so as to provide an effective movement of air in the vicinity of the storage tank and is maintained in operation continuously except when the storage tank is empty and has been thoroughly ventilated.

3.5.4 The exhausts of the ventilation systems required in [3.5.1] to [3.5.3] are to be located at least 3m away from inlets for other ventilation systems and from normal passageways.

3.6 Fire safety

3.6.1 Applicable requirements for spaces intended for the storage or handling of solvent are listed in:

- Ch 4, Sec 3, [3.1.1] for fire detection arrangements
- Ch 4, Sec 5 for fire integrity requirements.
- Ch 4, Sec 6, [4.5.2] for fire-extinguishing arrangements.

4 Arrangement and installation of the CO_2 system components

4.1 CO_2 tanks

4.1.1 CO_2 tank location

CO_2 tank location is to comply with the requirements of Pt D, Ch 9, Sec 2, [4] as applicable to type 3G ships.

CO_2 tank may be installed on the open deck, in a dedicated compartment or in the cargo area of tankers or offshore supply vessels. Where the CO_2 tank is installed in an enclosed space, the access is to be arranged only from the open deck and the access door is to open outwards.

Alternatively, access to the enclosed space containing the CO_2 storage tank may be from another enclosed space through an airlock, provided that the space containing the CO_2 storage tank is fitted with:

- an independent mechanical extraction ventilation system, providing a minimum of 6 air changes per hour
- at least two oxygen detectors fitted at suitable positions in the compartment and arranged to provide an alarm when the oxygen level falls below 19%. The alarm is to be both visible and audible inside and outside the compartment and placed in such a position that it is immediately received by responsible members of the crew.

4.1.2 CO_2 tank venting

Discharge piping from safety relief valves are to be designed so that they prevent clogging by dry ice formation upon safety release. Where arrangements are made to avoid dry ice formation, it should be demonstrated that the outlet flow velocity does not reach the critical speed (sonic velocity). Protective screens are not to be fitted to the outlets of relief valve discharge piping.

4.1.3 Longitudinal strength and stability

The impact of the liquid stored in CO_2 tank on the ship's longitudinal strength and stability is to be taken into account as indicated in Pt B, Ch 3, App 2, [1.2.20].

4.2 CO_2 vapour detection

4.2.1 CO_2 concentration monitoring

Spaces containing CO_2 tanks, CO_2 compression and liquefaction equipment and other enclosed spaces where CO_2 could accumulate are to be fitted with continuous monitoring for CO_2 build-up.

4.3 Ventilation

4.3.1 Spaces containing CO_2 tanks, CO_2 compression and liquefaction equipment and other enclosed spaces where CO_2 could accumulate are to be continuously ventilated with minimum six air changes per hour such that any release of CO_2 will be effectively dispersed in order to prevent the formation of a low oxygen atmosphere. The ventilation system serving such spaces is to be independent mechanical ventilation of the extraction type.

4.3.2 Where the spaces referred to in [4.3.1] may be entered in normal operation, the ventilation capacity is to be automatically increased to 10 air changes per hour in case of CO_2 leakage detection.

5 Personal protection

5.1 Protective equipment

5.1.1 For the protection of crew members, the ship is to have on board personal protective equipment (PPE) suitable for solvent handling. The number of PPE carried on board is to be appropriate for the number of personnel engaged in regular handling operations or that may be exposed in the event of a failure; but in no case is there to be less than two sets available on board.

5.1.2 Personal protective equipment (PPE) is to consist of:

- low temperature- and solvent-resistant protective clothing, boots, gloves and tight-fitting goggles and
- two self-contained breathing apparatus.

5.2 Emergency equipment

5.2.1 Eyewash and safety showers are to be provided, the location and number of these eyewash stations and safety showers are to be derived from the detailed installation arrangements.

6 Certification and surveys at works

6.1 General

6.1.1 Certification and workshop inspections are to be performed on:

- the various components of CCS system
- the materials used for their manufacture.

6.2 Type approval

6.2.1 The following CCS components are to be of a type approved by the Society:

- Solvent system:
  - Hoses, see Ch 1, Sec 10, [20.2]
- CO_2 system:
  - Pumps, see Pt D, Ch 9, Sec 5, [13.2]
  - Expansion bellows, see Pt D, Ch 9, Sec 5, [13.4]
  - Hoses, see Pt D, Ch 9, Sec 5, [11.7].

6.3 Inspection and testing

6.3.1 The CCS components are to be inspected and tested at works in accordance with the requirements of Tab 4.

Table 4 : Inspection and testing for the CCS system components

Item	Tests for the materials		Inspections and tests for the product		
	Tests required	Type of material certificate	During manufacturing (NDT)	After completion	Type of product certificate
EXHAUST GAS SYSTEM AND SEPARATION SYSTEM					
Exhaust gas (direct contact) cooler shell			Magnetic particle or liquid penetrant testing **(1)**	Ch 1, Sec 10, [20.5.5]	C
Exhaust gas blower				Ch 1, Sec 10, [20.5.5]	C
(1) To be performed on welded joints selected according to manufacturer's plan **(2)** For parts in contact with the fluid **(3)** For welded joints					

Item	Tests for the materials		Inspections and tests for the product		
	Tests required	Type of material certificate	During manufacturing (NDT)	After completion	Type of product certificate
Absorber shell	Chemical composition	W	Magnetic particle or liquid penetrant testing **(1)**		C
Desorber shell	Chemical composition	W	Magnetic particle or liquid penetrant testing **(1)**		C
Pipes, valves and fittings	Requirements of Ch 1, Sec 10, Tab 40 applicable to a class III piping system are to be complied with				
SOLVENT SYSTEM					
Heat exchangers	Ch 1, Sec 3, [9.1.3]	C		Ch 1, Sec 10, [20.5.3]	C
Independent tanks	Chemical composition	C			
Pumps	• Chemical composition **(2)** • Material tests as per Ch 1, Sec 10, [20.4.2]	C		Pressure test as per Ch 1, Sec 10, [20.5.5]	C
Pipes, valves and fittings	Requirements of Ch 1, Sec 10, Tab 40 applicable to a class I piping system are to be complied with				
Flexible hoses				Pressure test as per Ch 1, Sec 10, [20.5.6]	C
CO_2 SYSTEM - VAPOUR					
Compressors	• Chemical composition **(2)** • Material tests as per Ch 1, Sec 10, [20.4.2]	C		Pressure test as per Ch 1, Sec 10, [20.5.5]	C
Pipes, valves and fittings	Requirements of Ch 1, Sec 10, Tab 40 applicable to a class I piping system are to be complied with				
CO2 SYSTEM - LIQUID					
Condensers, heat exchangers and other equipment of the liquefaction plant	• Chemical composition **(2)** as per Pt D, Ch 9, Sec 6 • Material tests as per Pt D, Ch 9, Sec 6	C	NDT as per Pt D, Ch 9, Sec 5, [9.3] **(3)**	Pressure test as per Pt D, Ch 9, Sec 4, [10.6]	C
Storage tank	• Chemical composition as per Pt D, Ch 9, Sec 6 • Material tests as per Pt D, Ch 9, Sec 6, [5.6]	C	NDT as per Pt D, Ch 9, Sec 6, [5.6]]	Pressure test as per Pt D, Ch 9, Sec 4, [10.6]	C
Safety valves	• Chemical composition **(2)** as per Pt D, Ch 9, Sec 6 • Material tests as per Pt D, Ch 9, Sec 6	C		Pressure test and set pressure verification as per Pt D, Ch 9, Sec 5, [13.3.3]	C
Liquefied CO_2 Pumps	• Chemical composition **(2)** as per Pt D, Ch 9, Sec 6 • Material tests as per Pt D, Ch 9, Sec 6	C		Pressure test as per Pt D, Ch 9, Sec 5, [13.2]	C
Expansion bellows	• Chemical composition as per Pt D, Ch 9, Sec 6 • Material tests as per Pt D, Ch 9, Sec 6	C		Pressure test as per Pt D, Ch 9, Sec 5, [13.5]	C
Offloading hoses			NDT as per Pt D, Ch 9, Sec 5, [9.3] **(3)**	Pressure test as per Pt D, Ch 9, Sec 5, [11.7.5]	C
Pipes, valves and fittings	Requirements of Pt D, Ch 9, Sec 5, [9]; Pt D, Ch 9, Sec 5, [12] and Pt D, Ch 9, Sec 5, [13], as applicable, are to be complied with				

(1) To be performed on welded joints selected according to manufacturer's plan
(2) For parts in contact with the fluid
(3) For welded joints

Section 13 Ballast Water Management Systems

1 General

1.1 Application

1.1.1 Installation

Requirements for the installation of ballast water management systems (BWMS), are given in Articles [2] to [4] and:

- Ch 4, Sec 3, [3] for fire detection arrangement in spaces containing a ballast water management system
- Ch 4, Sec 6, [7] for fire-extinguishing arrangements for ballast water management rooms
- Ch 4, Sec 5 for fire integrity requirements applicable to ballast water management room (BWMR) and to spaces intended for the storage of liquid or solid chemicals for BWMS.

1.1.2 Certification

Requirements for the certification of ballast water management systems (BWMS) are given in Article [5].

1.2 Acronyms

1.2.1 The following acronyms are used in this Section:

AOT : Advanced oxidation technology

BWM : Ballast water management

BWMP : Ballast water management plan

BWMR : Ballast water management room

BWMS : Ballast water management system

IGG : Inert gas generator

TAC : Type approval certificate

TiO_2 : Titanium dioxide catalyst used in combination with UV treatment

TRC : Treatment rated capacity.

1.3 Definitions

1.3.1 Ballast water management system (BWMS) means any system which processes ballast water such that it meets or exceeds the ballast water performance standard in Regulation D-2 of IMO BWM Convention. The BWMS includes ballast water equipment, all associated piping arrangements as specified by the manufacturer, control and monitoring equipment and sampling facilities. The categorization of BWMS technologies is given in Tab 1. Applicability of the requirements for each BWMS technology is in accordance with Tab 2.

Taking into consideration future developments of BWMS technologies, some additional technologies may be considered in Tab 1.

1.3.2 Cargo area of tankers is defined:

- for oil tankers and FLS tankers, in Pt D, Ch 7, Sec 1, [1.3.1]
- for chemical tankers, in paragraph 1.3.6 of the IBC Code as amended by IMO resolutions up to MSC.460 (101)
- for gas carriers, in Pt D, Ch 9, Sec 1, [4.1.8]
- for offshore support vessels, in Pt E, Ch 3, Sec 1, [1.6.6].

1.3.3 Dangerous gas means any gas which may develop an atmosphere being hazardous to the crew and/or the ship due to flammability, explosivity, toxicity, asphyxiation, corrosivity or reactivity and for which due consideration of the hazards is required, e.g. hydrogen (H_2), hydrocarbon gas, oxygen (O_2), carbon dioxide (CO_2), carbon monoxide (CO), ozone (O_3), chlorine (Cl_2) and chlorine dioxide (ClO_2), etc.

1.3.4 Dangerous liquid means any liquid that is identified as hazardous in the Material Safety Data Sheet or other documentation relating to this liquid.

1.3.5 Hazardous area is defined in Ch 2, Sec 1, [3.13]. When a gas atmosphere is present, the following hazards may also be present: toxicity, asphyxiation, corrosivity and reactivity.

1.3.6 Non-hazardous area means an area which is not a hazardous area as defined in [1.3.5].

1.3.7 A ballast water management room (BWMR) is any space containing equipment belonging to the BWMS. A space containing remote controls for the BWMS or a space dedicated to the storage of liquid or solid chemicals for BWMS need not be considered as a BWMR for the purposes of this Section.

1.4 Documents to be submitted

1.4.1 The documents listed in Tab 3 are to be submitted.

1.4.2 In the case of installation of a BWMS on an existing ship, the documents listed in Tab 4 are to submitted in addition to those required in [1.4.1].

Table 1 : Categorization of BWMS technologies

		BWMS's Technology category										
		1	2	3a	3b	3c	4	5	6	7a	7b	8
	Characteristics	In-line UV or UV + Advanced Oxidation Technology (AOT) or UV + TiO_2 or UV + Plasma	In-line Flocculation	In-line membrane separation and de-oxygenation (injection of N_2 from a N_2 Generator)	In-line-de-oxygenation (injection of Inert Gas from Inert Gas Generator)	In-tank de-oxygenation with Inert Gas Generator	In-line full flow electrolysis	In-line side stream electrolysis **(2)**	In-line (stored) chemical injection	In-line side- stream ozone injection without gas/liquid separation tank and without discharge treatment tank	In-line side-stream ozone injection with gas/liquid separation tank and discharge water treatment tank	In-tank pasteurization and de-oxygenation with N_2 generator
Des-infection when ballasting	Making use of active substance			X		In-tank technology: No treatment when ballasting or de-ballasting	X	X	X	X	X	In-tank technology: No treatment when ballasting or de-ballasting
	Full flow of ballast water is passing through the BWMS	X	X	X	X		X				X	
	Only a small part of ballast water is passing through the BWMS to generate the active substance							X				
After-treatment when de-ballasting	Full flow of ballast water is passing through the BWMS	X									X	
	Injection of neutralizer						X	X	X	X	X	
	Not required by the Type Approval Certificate issued by the Flag Administration		X	X								
Examples of dangerous gas as defined in [1.3.3]			**(1)**	O_2 N_2	CO_2 CO		H_2 Cl_2	H_2 Cl_2	**(1)**	O_2 O_3 N_2		O_2 N_2

(1) To be investigated on a case by case basis based on the result of the IMO (GESAMP) MEPC report for Basic and Final approval in accordance with the G9 Guideline.

(2) In-line side stream electrolysis may also be applied in-tank in circulation mode (no treatment when ballasting or de-ballasting).

Table 2 : Applicability of the requirements for each BWMS technology

Applicable requirements	BWMS's Technology category										
	1	2	3a	3b	3c	4	5	6	7a	7b	8
	In-line UV or UV + Advanced Oxidation Technology (AOT) or UV + TiO_2 or UV + Plasma	In-line Flocculation	In-line membrane separation and de-oxygenation (injection of N_2 from a N_2 Generator)	In-line-de-oxygenation (injection of Inert Gas from Inert Gas Generator)	In-tank de-oxygenation with Inert Gas Generator	In-line full flow electrolysis	In-line side stream electrolysis	In-line (stored) chemical injection	In-line side- stream ozone injection without gas/liquid separation tank and without discharge treatment tank	In-line side-stream ozone injection with gas/liquid separation tank and discharge water treatment tank	In-tank pasteurization and de-oxygenation with N_2 generator
[1]	X	X	X	X	X	X	X	X	X	X	X
[2.1]	X	X	X	X	X	X	X	X	X	X	X
[2.2.1] **(1)**		X				X	X	X	X	X	
[2.2.2]									X	X	
[2.2.3] **(2)**		X	X	X	X	X	X	X	X	X	X
[2.3.1]			X	X	X						X
[2.3.2] **(3)**			X	X	X						X
[2.4.1]	X	X	X	X	X	X	X	X	X	X	X
[2.4.2] and [2.4.3]			X	X	X						X
[2.4.4]				X						X	
[2.5.1]	X	X	X	X	X	X	X	X	X	X	X
[2.5.4]	X	X	X	X	X	X	X	X	X	X	X
[2.6]	X	X	X	X	X	X	X	X	X	X	X
[2.7]			X	X	X						X
[2.8.1] **(4)**		X	X	X	X	X	X	X	X	X	X
[2.8.2]			X								X
[2.8.3]						X	X				
[2.8.4]									X	X	
[2.8.5]		X	X	X	X	X	X	X	X	X	X
[2.8.6]	X	X	X	X	X	X	X	X	X	X	X
[2.8.7]		X	X	X	X	X	X	X	X	X	X
[2.10.1], [2.10.2] and [2.10.3] **(5)**		X				X	X	X	X	X	
[2.10.4] **(5)**	X	X	X	X	X	X	X	X	X	X	X
[2.10.5]									X	X	
[2.10.6] **(5)**	X	X	X	X	X	X	X	X	X	X	X

(1) This requirement may be reduced if the BWMS does not use any flammable or toxic chemical substances
(2) This requirement may be reduced if no dangerous gas as defined in [1.3.3] will be generated by the BWMS
(3) This requirement may be reduced if the stored chemicals are neither toxic not flammable
(4) This requirement may be reduced if no toxic chemical is stored and no toxic gas will be generated by the BWMS
(5) The requirements applicable to BWMS storing, utilizing or introducing chemicals may be reduced if no toxic chemical is used or will be generated by the BWMS

Applicable requirements	BWMS's Technology category										
	1	2	3a	3b	3c	4	5	6	7a	7b	8
	In-line UV or UV + Advanced Oxidation Technology (AOT) or UV + TiO_2 or UV + Plasma	In-line Flocculation	In-line membrane separation and de-oxygenation (injection of N_2 from a N_2 Generator)	In-line-de-oxygenation (injection of Inert Gas from Inert Gas Generator)	In-tank de-oxygenation with Inert Gas Generator	In-line full flow electrolysis	In-line side stream electrolysis	In-line (stored) chemical injection	In-line side- stream ozone injection without gas/liquid separation tank and without discharge treatment tank	In-line side-stream ozone injection with gas/liquid separation tank and discharge water treatment tank	In-tank pasteurization and de-oxygenation with N_2 generator
[3.2.1]				X	X				X	X	
[3.2.2]						X	X	X			
[3.3]	X	X	X	X		X	X	X	X	X	
[3.4]	X	X	X	X		X	X	X	X	X	
[3.5]	X	X	X	X	X	X	X	X	X	X	X
[3.6]	X	X	X	X		X	X	X	X	X	
[4.2.1]		X	X		X	X	X	X	X	X	X
[4.2.2]			X	X	X				X	X	X
[4.2.3]									X	X	
[4.2.4]						X	X	X	X	X	
[4.2.5]						X	X	X			
[4.2.6]			X	X	X	X	X	X	X	X	X
[4.3.2] to [4.3.5]		X	X	X	X	X	X	X	X	X	X
[4.3.6]			X			X	X	X	X	X	X
[4.3.7]			X						X	X	X
[4.3.8]			X			X	X	X	X	X	X
[4.3.9]			X			X	X	X	X	X	X
[4.4]		X				X	X	X	X	X	
[5.1]	X	X	X	X	X	X	X	X	X	X	X
[5.2]						X	X	X	X	X	
[5.3]	X	X	X	X	X	X	X	X	X	X	X

(1) This requirement may be reduced if the BWMS does not use any flammable or toxic chemical substances
(2) This requirement may be reduced if no dangerous gas as defined in [1.3.3] will be generated by the BWMS
(3) This requirement may be reduced if the stored chemicals are neither toxic not flammable
(4) This requirement may be reduced if no toxic chemical is stored and no toxic gas will be generated by the BWMS
(5) The requirements applicable to BWMS storing, utilizing or introducing chemicals may be reduced if no toxic chemical is used or will be generated by the BWMS

Table 3 : List of documents to be submitted

No.	I/A **(1)**	Document **(2)**
1	A	Diagram of the ballast system (inside and outside machinery spaces)
2	A	Diagram of the BWMS with location of ballast water sampling facilities
3	I	Type Approval Certificate of the BWMS
4	A	In case active substances are used: • Storage tanks and day tanks containing chemicals including: - Filling, drain system, venting system, drip trays, soundings,… - Tanks capacity in regards of the expected rate of consumption, capacity of the ballast water system and required endurance • Safety documentation for active substance used, such as material safety data sheet (MSDS) from supplier
5	I	Technical description of the BWMS's operating principles, containing also operational and maintenance procedures, and backup procedures in case of equipment malfunction. It is to include a risk assessment if at least one of the following conditions is met: • The system uses noxious chemical • Dangerous gases or vapors may accumulate within the ballast system during operation • Accelerated corrosion or deterioration of tank coating may occur due to the treated ballast water
6	I	Technical installation specification which was submitted in support of the BWMS statutory approval, with: • Initial calibration procedures • Installation commissioning procedures
7	I	BWMS safety and manual operating containing chemical injection procedures, alarm systems, measures in case of emergency, etc. Equipment manuals for major components of the BWMS
8	A	Electrical load analysis, demonstrating the adequacy of the generating plant capacity under normal operating conditions of ballasting and de-ballasting given in the ballast water management plan (BWMP) **(3)**

(1) A = to be submitted for approval I = to be submitted for information.
(2) Diagrams are also to include, where applicable, the (local and remote) control and monitoring systems and automation systems.
(3) For retrofit installation to existing ships, a revised electrical load analysis with preferential trips of non-essential services can be accepted.

Table 4 : List of additional documents to be submitted in the case of installation of a BWMS on an existing ship

No.	I/A **(1)**	Document **(2)**
1	A	General arrangement plan of the BWMS in the ship
2	I	Shipboard test plan for sea and/or quay trial
3	A	Other piping and instrument diagram, if the BWMS is connected to others systems (control air, bilge, fresh water, cooling system,…)
4	A	General arrangement of the electrical components: • General layout specifying the interconnection of the major electrical components of the system • Ingress protection (IP) of the electrical panels and associated devices (junction boxes, electrical motors, etc.) • Interconnection diagram or document describing the link between the BWMS and the ship's alarm system
5	A	Safety and protection: • List of alarms and safeties of the system • List of electrical sensors/components in hazardous areas, when applicable • Characteristics and certifications of the electrical devices added during the integration of the BWMS: electrical cables, detectors, etc.
6	A	Single line diagram showing the power electrical arrangement to supply the BWMS unit
7	I	Type of cables to be installed provided with the related Type Approval Certificates
8	A	Structural fire protection plan, including fire categorization, at least for the modified/new spaces, and including traces of the previous arrangement

(1) A = to be submitted for approval I = to be submitted for information.
(2) Diagrams are also to include, where applicable, the (local and remote) control and monitoring systems and automation systems.
(3) The installation of the BWMS may have an impact on the ship's stability, such as on the lightweight, position of the center of gravity, position of watertight bulkhead (the watertight integrity). In order to evaluate the impact of the added weight of the BWMS on the stability, the weight of the added BWMS and the exact position of its center of gravity (VCG, LCG, and TCG) are to be provided. Subject to the Society's satisfaction, the submission of the documents may not be required.

No.	I/A (1)	Document (2)
9	A	Type approval certificates of newly installed materials with regards to fire protection, including especially pipe and/or cable penetrations in fire divisions
10	A	Ventilation, fire extinguishing and detection systems, to be documented if the integration of BWMS on board the ship has impact on such systems
11	A	Updated fire control plan
12	A	Updated hazardous area plan
13	A	In case the installation of the BWMS requires structural modifications of the vessel (relocation of watertight bulkheads, new openings, new pipe routings in the damage zone which may lead to progressive flooding) (3): • Updated damage control plan and booklet • Updated damage stability booklet
14	A	In case a deviation from lightship displacement or longitudinal center of gravity exceeding the recommended deviation is found, in comparison with the approved stability booklet (3): • Inclining experiment report • Updated trim and stability booklet
15	A	Updated structural drawings, reflecting the new arrangement, and including the supporting structure and information on reaction loads
16	I	In case of capacity creation: Updated capacity plan, including the density of the liquid to be loaded

(1) A = to be submitted for approval I = to be submitted for information.
(2) Diagrams are also to include, where applicable, the (local and remote) control and monitoring systems and automation systems.
(3) The installation of the BWMS may have an impact on the ship's stability, such as on the lightweight, position of the center of gravity, position of watertight bulkhead (the watertight integrity). In order to evaluate the impact of the added weight of the BWMS on the stability, the weight of the added BWMS and the exact position of its center of gravity (VCG, LCG, and TCG) are to be provided. Subject to the Society's satisfaction, the submission of the documents may not be required.

2 Installation

2.1 General requirements

2.1.1 Maximum treatment rated capacity

In case the maximum capacity of the ballast pump(s) exceeds the maximum treatment rated capacity (TRC) of the BWMS specified in the TAC issued by the Flag Administration, there should be a limitation on the BWMP giving a maximum allowable flow rate for operating the ballast pump(s) that is not to exceed the maximum TRC of the BWMS.

Additionally, in case the TRC is exceeded the system shall give an alarm which is to be recorded.

2.1.2 By-pass or override arrangements

a) The BWMS is to be provided with bypass or override arrangement to effectively isolate it from any essential ship system to which it is connected.

b) Any by-pass or override operation is to trigger an audible and visual alarm and these events are to be automatically recorded in control equipment. This requirement is also applicable to gravity ballast pipes.

c) Where the ship's ballast pump flow rates need to be limited in order to ensure operation of the BWMS within the limits of the BWMS TAC, the arrangement of the bypasses or overrides of the BWMS is to be consistent with the approved Operation Maintenance and Safety Manual by the Flag Administration's type approval.

2.2 Location and arrangement of BWMR and chemical substance storage rooms

2.2.1 BWMS using chemical substances

For BWMS storing, introducing or generating chemicals, the BWMR and chemical substance storage rooms are not to be located in the accommodation area. Any ventilation exhaust or other openings from these rooms are to be located not less than 3m from entrances, air inlets and openings to accommodation spaces.

This requirement need not apply in case the BWMS is located in the engine room.

2.2.2 Ozone-based BWMS

Ozone-based BWMS (i.e. cat.7a and 7b) are to be located in dedicated compartment, separated from any other space by gastight boundaries. Access to the BWMR from any other enclosed space is to be through airlock only, except if the only access to that space is from the open deck.

Access to the ozone based BWMR may be provided through the engine room only provided:

- access from the engine room to the BWMR is through airlock
- an alarm repeater is provided in the BWMR, which will repeat any alarm activated in the engine room.

A sign is to be affixed on the door providing personnel with a warning that ozone may be present and with the necessary instructions to be followed before entering the room.

2.2.3 Doors

BWMR containing equipment for BWMS of the following types are to be equipped with tested gastight and self-closing doors without any holding back arrangements:

- BWMS storing, introducing or generating chemical substances
- de-oxygenation based on inert gas generator
- electrolysis
- ozone injection.

Doors leading to the open deck need however not to be self-closing.

2.3 Location of chemical substance storage tanks

2.3.1 When the chemical substances are stored inside integral tanks, the ship's shell plating is not to form any boundary of the tank.

2.3.2 Tanks containing chemicals are to be segregated from accommodation, service spaces, control stations, machinery spaces not related to the BWMS and from drinking water and stores for human consumption by means of a cofferdam, void space, cargo pump-room, empty tank, oil fuel storage tank, BWMR or other similar space. On-deck stowage of permanently attached deck tanks or installation of independent tanks in otherwise empty hold spaces should be considered as satisfying this provision.

2.4 Piping systems

2.4.1 All valves, piping fittings and flanges are to comply with the relevant requirements of Ch 1, Sec 10. In addition, special consideration may be given to the material used for this service with the agreement of the Society.

2.4.2 Where a vacuum or overpressure may occur in the ballast piping or in the ballast tanks due to the height difference or injection of inert gas or nitrogen (N_2), a suitable protection device is to be provided (i.e. P/V valves, P/V breakers, P/V breather valves or pressure safety relief valve or high/low pressure alarms). The pressure and vacuum settings of the protection device are not to exceed the design pressure of the ballast piping (BWMS categories 3a and 3b) or ballast tank (BWMS categories 3a, 3b and 3c), as relevant.

2.4.3 For BWMS categories 3a, 3b and 3c, the inert gas or nitrogen product enriched air from the inert gas system and from the protection devices installed on the ballast tanks (i.e. P/V valves, P/V breakers or P/V breather valves) are to discharge to a safe location on the open deck. See [2.9].

2.4.4 When cavitation is the BWMS treatment process (for example by use of pressure vacuum reactor working in combination with a vertical ballast water drop line) or part of the BWMS treatment process (for example by use of “smart pipe” or “special pipe” in BWMS category 7b or by use of “venturi pipe” in BWMS technology 3b) or by use other means, the design and the wall thickness or grade of materials or inside coating or surface treatment of the part of the piping where the cavitation is taking place is to be specifically considered.

2.5 Electrical and automation systems

2.5.1 The capacity of the generating plant is to be sufficient to support the operation of the BWMS under normal operating conditions of ballasting and de-ballasting given in the Ballast Water Management Plan (BWMP).

2.5.2 Overcurrent or overvoltage protection is to be installed to protect UV type BWMS.

2.5.3 Electrolysis reactors are to be provided with at least two independent means of monitoring operation. The monitoring system is to initiate audible and visual alarms and automatic shutdown of the BWMS in the event that an anomaly is detected.

If a pressure relief valve is also provided, the vent of this valve is to be led to a safe location on the open deck, as clarified in Tab 8. The valve is to be positioned to optimally remove gas from the electrolysis reactor.

2.5.4 When it is required to have an automatic shutdown of the BWMS for safety reasons, this is to be initiated by a safety system independent of the BWM control system.

2.5.5 For ships to be assigned an **AUT** additional class notation, alarms and indications required by the present sub-article are to be provided at the centralised control position, see Pt F, Ch 3, Sec 1, [4.8.10].

2.6 Hazardous areas

2.6.1 Extension of hazardous areas related to the cargo vapours

When the concerned ballast tanks are hazardous areas, an extension of hazardous area is to be considered at the outlet of the protection devices: with reference to IEC 60092-502:1999, section 4.2.2.9 the areas on open deck, or semi-enclosed spaces on open deck, within 1,5 m of their outlets are to be categorized hazardous zone 1 and with reference to IEC 60092- 502:1999, section 4.2.3.1, an additional 1,5 m surrounding the 1,5 m hazardous zone 1 is to be categorized hazardous zone 2. Any source of ignition such as anchor windlass or opening into chain locker is to be located outside the hazardous areas.

2.6.2 Hazardous areas related to the flammable vapours from the treatment substances or generated by the BWMS

Where products covered by IEC 60092-502:1999 are stored on board or generated during operation of the BWMS, the requirements of this standard are to be followed in order to:

- define hazardous areas and acceptable electrical equipment
- design ventilation systems.

2.6.3 Electric and electronic components are not to be installed in a hazardous area unless they are of a certified safe type for use in this area. Cable penetrations of decks and bulkheads are to be sealed when a pressure difference between the areas is to be maintained.

2.7 Inert gas systems

2.7.1 Inert gas systems installed for de-oxygenation BWMS (categories 3a, 3b, 3c and 8) are to be designed in accordance with the following requirements:

a) Ch 4, Sec 15, [13]:

- Ch 4, Sec 15, [13.1.1], items b) and c)
- Ch 4, Sec 15, [13.2.1]

  Ch 4, Sec 15, [13.2.2], items a), b), c) and f)

  Ch 4, Sec 15, [13.2.4] except requirements for low pressure gas alarm in items e) 1) and e) 3)
- Ch 4, Sec 15, [13.3.2], items a) 2), b), d) 2), e) and f)

  Ch 4, Sec 15, [13.3.3] except item b) requirement for an alarm for insufficient fuel oil supply to the oil-fired inert gas generator
- Ch 4, Sec 15, [13.4.2], items c) and d)

  Ch 4, Sec 15, [13.4.3]
- For inert gas systems installed for in-tank de-oxygenation BWMS (category 8):

  Ch 4, Sec 15, [13.2.3] items a) and b) except b) 6), b) 7) and b) 10).

In general, when applying Ch 4, Sec 15, [13] requirements to inert-gas based BWMS, the following modifications are to be considered:

- the terms “cargo tank” and “cargo piping” are to be replaced by “ballast water tank” or “ballast water piping” as relevant
- the term “cargo control room” is to be replaced by “BWMS control station” as relevant
- requirements for slop tanks on combination carriers are to be disregarded
- when applying Ch 4, Sec 15, [13.2.4] item e) 1), the acceptable oxygen content is to be specified by the manufacturer, 5% oxygen content need not necessarily be applied.

b) Pt D, Ch 7, Sec 6, [5.2.2]

Pt D, Ch 7, Sec 6, [5.3.1]

Pt D, Ch 7, Sec 6, [5.3.3]

Pt D, Ch 7, Sec 6, [5.3.7]

Pt D, Ch 7, Sec 6, [5.3.8]

Pt D, Ch 7, Sec 6, [5.4.4]. In applying Pt D, Ch 7, Sec 6, [5.4.4], the terms “cargo tanks” and “cargo piping” are to be understood as “ballast tanks” and “ballast piping” respectively. For de-oxygenation BWMS (categories 3a, 3b, 3c and 8), the requirements in item a) prevail.

2.8 Ventilation systems

2.8.1 The ventilation systems for BWMR containing BWMS of the following types is to be independent of the ventilation systems serving any other spaces:

- BWMS storing, introducing or generating chemical substances
- de-oxygenation, including pasteurization and de-oxygenation (cat.3 and cat.8 as per Tab 1)
- electrolysis
- ozone injection.

2.8.2 The ventilation exhaust for BWMR containing a nitrogen generator is to be located in the lower part of the room in order to efficiently evacuate dangerous gases (as defined in [1.3.3]) heavier than air.

2.8.3 The ventilation exhaust for BWMR containing electrolysis systems is to be located so as to be able to efficiently evacuate dangerous gases (as defined in [1.3.3]) that could be generated during the electrolysis process. Due regard is to be paid to the expected quantity and density of such gases when designing the ventilation exhaust.

2.8.4 The following requirements apply to ventilation ducts serving BWMR for ozone-based BWMS:

- the part of the ducts located outside of the BWMR are to be made of steel having a thickness of at least 3 mm for ducts with a free cross-sectional area of less than 0,075 m^2, at least 4 mm for ducts with a free cross-sectional area of between 0,075 m^2 and 0,45 m^2, and at least 5 mm for ducts with a free cross-sectional area of over 0,45 m^2
- the ducts are to be suitably supported and stiffened
- the outside openings of the ducts are to be fitted with protective screens of not more than 13 mm square mesh.

2.8.5 The ventilation system for BWMR containing ozone-based BWMS or ventilation system for hydrogen de gas arrangement as required by [4.3.6] is to be interlocked with the BWMS such that:

- in case of loss of ventilation (primary and secondary), a visual and audible alarm is be triggered both inside and outside the BWMR and at a place where a responsible member of the crew is on duty. If the ventilation is not restored after a pre-set time, the BWMS is then to be automatically shut down. Any need for cooldown necessary for safe shutdown is to be considered in the shutdown sequence
- it is not possible to start the BWMS without the ventilation running.

For ventilation systems serving BWMR and containing or conveying a dangerous gas, relevant requirements in [4] are to be satisfied.

2.8.6 An adequate power ventilation system is to be provided in enclosed BWMR.

2.8.7 The ventilation capacity is to be at least 30 air changes per hour where explosive or toxic gases may be generated during operation of the BWMS. The IMO reports issued during the basic and final approval procedures of the BWMS that make use of active substances (G9 Guidelines) and ''safety hazard'' as listed in Chapter 17 of IBC code are to be used as references for identifying those cases.

The ventilation capacity may be reduced as per Tab 5.

Table 5 : Reduced ventilation capacity

Type of BWMS	Reduced ventilation capacity (air changes per hour) **(1)**
Flocculation-type BWMS	6
De-oxygenation, including pasteurization and de-oxygenation (cat.3 and cat.8 as per Tab 1)	6
Full flow electrolysis	6
Side-stream electrolysis	20
Ozone injection	20
Chemical injection	6
(1) More stringent ventilation capacity requirements may arise from other applicable rules, e.g. Part D, Chapter 8 for spaces located in the cargo area of ships having the service notation **chemical tanker**.	

2.9 Safe locations for venting

2.9.1 Safe locations referred to in [2.4.3] are to comply with the provisions of Tab 6.

2.9.2 Safe location needs to address the specific types of discharges separately.

2.9.3 Signboards or similar warnings at the discharge areas are to be provided.

Table 6 : Safe locations for venting

Nature of the discharged gas	Concerned BWMS category	Origin of the discharge or vent	Acceptable safe locations of the discharge or vent outlet on the open deck
Inert gas or nitrogen product enriched air	In-line (categories 3a and 3b) and in-tank (categories 3c and 8) de-oxygenation BWMS	Protection devices installed on the ballast tanks, nitrogen or inert gas generators, nitrogen buffer tank (if any)	• Not within 3 m of areas traversed by personnel • Not within 6 m of air intakes for machinery (engines and boilers) and all ventilation inlets/outlets.
	In-line ozone injection BWMS (categories 7a and 7b)	Oxygen generator	
Oxygen-enriched air	In-line and in-tank de-oxygenation BWMS (categories 3a and 8)	Nitrogen generator	• Outside of hazardous area • Not within 3 m of any source of ignition and from deck machinery, which may include anchor windlass and chain locker openings, and equipment which may constitute an ignition hazard • Not within 3 m of areas traversed by personnel • Not within 6 m of air intakes for machinery (engines and boilers) and all ventilation inlets.
	In-line ozone injection BWMS (categories 7a and 7b)	Protection devices or vents from oxygen generator, compressed oxygen vessel, the ozone generator and ozone destructor devices	
Hydrogen by-product enriched gas	In-line full flow electrolysis BWMS (category 4), in-line side-stream electrolysis BWMS (category 5) and in-line injection BWMS using chemical which is stored onboard (category 6)	Hydrogen de-gas arrangement (when provided)	• Not within 5 m of any source of ignition and from deck machinery, which may include anchor windlass and chain locker openings, and equipment which may constitute an ignition hazard • Not within 3 m of areas traversed by personnel • Not within 5 m of air intakes from non-hazardous enclosed spaces. **(1)**
Gas from O_3 destructor device (ODS)	In-line ozone injection BWMS (categories 7a and 7b)	ODS fulfilling the following conditions: • the ODS are duplicated; and • the manufacturer justified that the quantity of consumable (activated carbon) used by the ODS is sufficient for the considered life cycle of the BWMS • ozone detection is arranged in the vicinity of the discharge outlet from the vent outlet of the ODS to alarm the crew in case the ODS is not working.	The safe locations defined for oxygen-enriched air apply
		ODS not fulfilling one of the above conditions	• Outside of hazardous area • Not within 3 m of any source of ignition • Not within 6 m of areas traversed by personnel • Not within 6 m of air intakes for machinery (engines and boilers) and all ventilation inlets.

(1) The areas on open deck, or semi-enclosed spaces on open deck, within 3 m of the outlets are to be categorized hazardous area zone 1 plus an additional 1,5 m surrounding the 3 m hazardous area zone 1 is to be categorized hazardous area zone 2. Electrical apparatus located in the above hazardous areas zone 1 and zone 2 is to be suitable for at least IIC T1.

2.10 Personal equipment

2.10.1 Suitable protection equipment are to be available on board for the protection of the crew members who are engaged in the servicing, maintenance and repair of BWMS storing, introducing or generating chemicals, as recommended by the product manufacturers. The protection equipment is to consist of large aprons, special gloves with long sleeves, suitable footwear, coveralls of chemical-resistant materials, and tight fitting goggles or face shields or both. The protective clothing and equipment are to cover all skin so that no part of the body is unprotected. This protection equipment is to be provided separately without taking into account equipment required by other mandatory requirements.

2.10.2 Work clothes and protective equipment are to be kept in easily accessible places and in special lockers. Such equipment are not to be kept within accommodation spaces, with the exception of new, unused equipment and equipment which has not been used since undergoing a thorough cleaning process. Notwithstanding the above, storage rooms for such equipment may be located within accommodation spaces if adequately segregated from living spaces such as cabins, passageways, dining rooms, bathrooms, etc.

2.10.3 When a BWMS storing, introducing or generating chemicals is installed on board, suitably marked decontamination showers and an eyewash are to be available in a convenient location in close proximity to the BWMS and the chemical store room(s).

2.10.4 An emergency escape breathing apparatus (EEBD) is to be provided in the BWMR. This emergency escape breathing apparatus may be one of the EEBDs provided in accordance with the requirements of SOLAS II-2/13.

An EEBD need not be required for BWMS of cat.1 as per Tab 1.

2.10.5 A personal ozone detector, calibrated as per the manufacturer's specifications, is to be provided for each person engaged in the servicing, maintenance and repair of BWMS utilizing ozone.

2.10.6 A two-way portable radiotelephone apparatus dedicated for the BWMS service, maintenance and repair is to be provided, in addition to those required by SOLAS for fire-fighting purposes. This two-way radiotelephone apparatus is to be properly identified in order to avoid mix-up with the apparatus intended for fire-fighting operations. Where the BWMS may release explosive gases, this two-way radiotelephone apparatus is to be of a certified safe type suitable for use in zone 1 hazardous areas, as defined in IEC Publication 60079. Where the BWMS stores, utilizes or introduces chemicals, the apparatus is to undergo deep cleaning or de-contamination after use.

A two-way portable radiotelephone apparatus need not be required for BWMS of cat.1 as per Tab 1.

3 Additional requirements for tankers and offshore service vessels

3.1 Application

3.1.1 The requirements of this Article apply to:

- oil tankers and FLS tankers (excluding ships carrying only products with flashpoint > 60°C)
- chemical tankers
- gas carriers
- offshore support vessels carrying flammable or hazardous liquid substances in bulk.

3.2 Location of BWMS

3.2.1 BWMS using ozone generators (categories 7a and 7b) and de-oxygenation BWMS using inert gas generator by treated flue gas from main or auxiliary boilers or gas from an oil or gas-fired gas generator (categories 3b and 3c) are to be located outside the cargo area in accordance with Ch 4, Sec 15, [13.3.2], item a) 2).

This requirement does not apply to nitrogen generators.

3.2.2 In-line full flow electrolysis BWMS (category 4), in-line side-stream electrolysis BWMS (category 5) and in-line injection BWMS using chemical which is stored on board (category 6) can be located inside the hazardous areas with due consideration of the requirement of [2.6.3] but are not to be located inside the cargo pump room unless it is demonstrated by the BWMS manufacturer that the additional hazards that could be expected from dangerous liquids and dangerous gases stored or evolved from the BWMS (for example H_2 generation):

- do not lead to an upgrade of the hazardous area categorization of the cargo pump room
- are not reactive with the cargo vapours expected to be present in the cargo pump room
- are not reactive with the fire-extinguishing medium provided inside the cargo pump room
- are not impacting the performance of the existing fire-fighting systems provided inside the cargo pump room
- are not introducing additional hazards inside the cargo pump room such as toxicity hazards that would not have been addressed before by suitable counter measures.

In-line full flow electrolysis BWMS (category 4) may be accepted in cargo compressor rooms of liquefied gas carriers and inside cargo pump rooms of oil tankers or chemical tankers if that cargo pump room is located above the cargo tank deck.

For submerged cargo pumps, the room containing the hydraulic power unit or electric motors is not to be considered as the "cargo pump room".

Ballast pump rooms and other pump rooms not containing the cargo pumps are not to be considered as the "cargo pump room".

3.3 Independent BWMS

3.3.1 In general, two independent BWMS are required i.e. one for ballast tanks located within the cargo area and the other one for ballast tanks located outside cargo area. Specific arrangements where only one single In-line BWMS (categories 1, 2, 3a, 3b, 4, 5, 6, 7a and 7b) could be accepted are given in [3.7].

3.4 Case of tankers where the fore peak ballast tank and other ballast tanks within the cargo area are served by a common piping system

3.4.1 When the fore peak tank is ballasted with the piping system serving the other ballast tanks within the cargo area in accordance with Pt D, Ch 7, Sec 4, [2.3.8] or Pt D, Ch 8, Sec 3, [5.1.3], the ballast water of the fore peak tank is to be processed by the BWMS processing the ballast water of the other ballast tanks within the cargo area.

3.5 Isolation means

3.5.1 Isolation between ballast piping serving the ballast tanks inside and outside of the cargo area is to be in accordance with [3.5.2] to [3.5.8]

3.5.2 Interconnection between the ballast piping serving the ballast tanks located within the cargo area and the ballast piping serving the ballast tanks located outside the cargo area may be accepted if appropriate isolation arrangement is provided in accordance with [3.7].

3.5.3 The means of appropriate isolation described in [3.5.6] is necessary for the interconnection specified in [3.5.6] regardless of the diameter of the piping.

3.5.4 As indicated in [3.7], the means of appropriate isolation described in [3.5.6] is necessary for the interconnection specified in [3.5.6] in the case of the active substance piping such as N_2 gas piping, inert gas piping, neutralizer piping, fresh water piping for filter cleaning, compressed air piping for remaining water purge and sea water piping for adjusting the salinity etc.

3.5.5 The means of appropriate isolation described in [3.5.6] for the interconnection specified in [3.5.6] need not be applied to the sampling lines described in [3.6].

3.5.6 The means of appropriate isolation is to be one of the following (see Tab 7):

a) Two non-return valves with positive means of closing in series with a spool piece (also mentioned "means of dis-connection" in [3.7])

Note 1: As an alternative to positive means of closure, an additional valve having such means of closure may be provided between the non-return valve and the spool piece.

b) Two non-return valves with positive means of closing in series with a liquid seal at least 1,5 m in depth, provided with freeze protection arrangement in the case of ships operating in cold weather conditions

Note 2: As an alternative to positive means of closure, an additional valve having such means of closure may be provided between the non-return valve and the liquid seal.

Note 3: A portable heating system may be accepted as freeze protection arrangement.

c) Automatic double block and bleed valves and a non-return valve with positive means of closing.

Note 4: As an alternative to positive means of closure, an additional valve having such means of closure may be provided after the non-return valve.

3.5.7 The means of appropriate isolation mentioned in [3.5.6] is to be provided on the open deck in the cargo area.

3.5.8 When the fore peak tank is ballasted with the piping system serving the other ballast tanks within the cargo area in accordance with Pt D, Ch 7, Sec 4, [2.3.8] or Pt D, Ch 8, Sec 3, [5.1.3], the means of appropriate isolation described in [3.5.6] and [3.5.7] is not required in between the fore peak tank and the common ballast water piping serving the other ballast water tanks within the cargo area.

Table 7 : Isolation mean

Two non-return valves with positive means of closing in series with a spool piece	Two non-return valves with positive means of closing in series with a liquid sea	Automatic double block and bleed valves and a non-return valve with positive means of closing
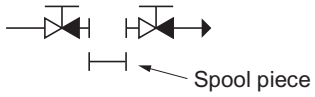	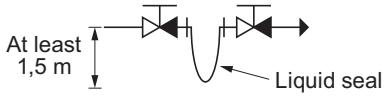	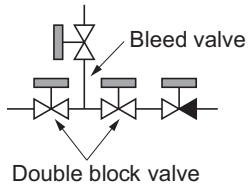

3.6 Sampling arrangements

3.6.1 In general, sampling lines which are connected to the ballast water piping system serving the tanks in the cargo area and provided for the purpose of the following:

- for any BWMS: ballast water sampling required by the G2 Guideline of the BWM Convention (2004)
- for BWMS technologies categories 4, 5, 6, 7a and 7b: total residual oxidant (TRO) analysis in closed loop system

are not to be led into a non-hazardous enclosed space outside the cargo area.

However, the sampling lines may be led into a non-hazardous enclosed space outside the cargo area provided the following requirements are fulfilled (See Fig 1):

a) The sampling facility (for BWMS monitoring/control) is to be located within a gastight enclosure (hereinafter, referred to as a 'cabinet'), and the following 1) through 4) are to be complied
   1) in the cabinet, a stop valve is to be installed on each sampling line
   2) gas detection equipment is to be installed in the cabinet and the valves specified in item a) 1) are to be automatically closed upon activation of the gas detection equipment
   3) audible and visual alarm signals are to be activated both locally and at the BWMS control station when the concentration of explosive gases reaches a pre-set value, which is not to be higher than 30% of the lower flammable limit (LFL). Upon activation of the alarm, the electrical power to the cabinet is to be automatically disconnected except for electrical equipment of certified safe type
   4) the cabinet is to be vented to a safe location in a non-hazardous area on the open deck and the vent is to be fitted with a flame arrester.

b) The standard internal diameter of sampling pipes is to be the minimum necessary in order to achieve the functional requirements of the sampling system.

c) The cabinet is to be installed as close as possible to the bulkhead facing the cargo area, and the sampling lines located outside the cargo area are to be routed on their shortest ways.

d) Stop valves are to be located in the non-hazardous enclosed space outside the cargo area, in both the suction and return lines close to the penetrations through the bulkhead facing the cargo area. A warning plate stating “Keep valve closed when not performing measurements” is to be posted near the valves. Furthermore, in order to prevent backflow, a water seal or equivalent arrangement is to be installed on the hazardous area side of the return pipe.

e) A stop valve is to be installed on the cargo area for each sampling line (i.e. both the suction and return lines).

f) The samples which are extracted from the ballast water piping system serving the tanks within the cargo area are not to be discharged to a tank located outside the cargo area nor to a piping line supplying the spaces located outside the cargo area.

Figure 1 : Arrangement of the sampling facility when located outside the cargo area

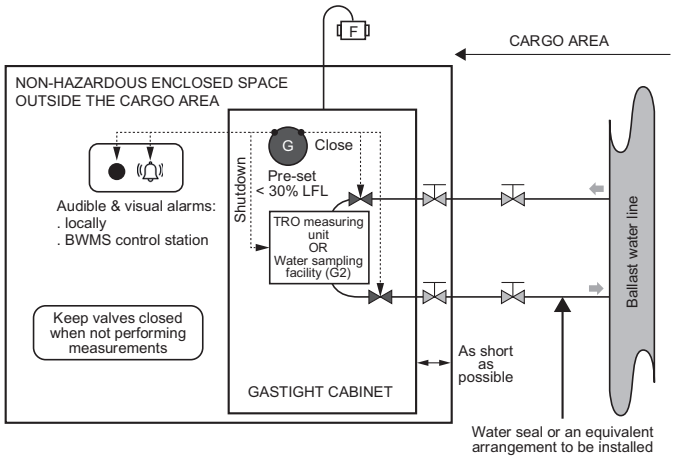

3.7 Acceptability of single BWMS installation on tankers

3.7.1 Acceptable arrangements of single BWMS for in-line BWMS's technologies

Arrangement of one single BWMS located outside the cargo area of tankers may be accepted in accordance with the provisions of Tab 8.

The detailed arrangements of BWMS are given in [3.7.2].

Note 1: [3.7] does not cover In-tank technologies categories 3c and 8.

3.7.2 Detailed arrangements of single BWMS installed outside the cargo area

The detailed arrangements of single BWMS installed outside the cargo area are listed in Tab 9 and shown in Fig 2 to Fig 8.

The key to symbols used in these figures are given in Tab 9.

Table 8 : Acceptable arrangements of one single BWMS depending on the BWMS' technology category

Characteristics		BWMS's Technology category								
		1	2	3a	3b	4	5	6	7a	7b
		In-line UV or UV + Advanced Oxidation Technology (AOT) or UV + TiO_2 or UV + Plasma	In-line Flocculation	In-line membrane separation and de-oxygenation (injection of N_2 from a N_2 Generator)	In-line-de-oxygenation (injection of Inert Gas from Inert Gas Generator)	In-line full flow electrolysis	In-line side stream electrolysis **(3)**	In-line (stored) chemical injection	In-line side- stream ozone injection without gas/liquid separation tank and without discharge treatment tank	In-line side- stream ozone injection with gas/liquid separation tank and without discharge water treatment tank
Des-infection when ballasting	Making use of active substance		X			X	X	X	X	X
	Full flow of ballast water is passing through the BWMS	X	X	X	X	X				X
	Only a small part of ballast water is passing through the BWMS to generate the active substance						X			
After-treatment when de-ballasting	Full flow of ballast water is passing through the BWMS	X								X
	Injection of neutralizer					X	X	X	X	X
	Not required by the Type Approval Certificate issued by the Flag Administration		X	X						
Examples of dangerous gas as defined in [1.3.3]			**(1)**	O_2N_2	CO_2 CO	H_2 Cl_2	H_2 Cl_2	**(1)**	O_2, O_3, N_2	
Arrangement of one single BWMS	BWMS is located outside the cargo area	Not acceptable	Case 1.2 **(2)**	Case 1.3a **(2)**	Case 1.3b	Case 1.4 **(2)**	Case 1.5	Case 1.6	Case 1.7a	Case 1.7b **(2)**

(1) To be investigated on a case by case basis based on the result of the IMO (GESAMP) MEPC report for Basic and Final approval in accordance with the G9 Guideline.

(2) Only «Means of dis-connection» as described in [3.5.6], item a) are to be applied.

(3) In-line side stream electrolysis may also be applied in-tank in circulation mode (no treatment when ballasting or deballasting).

Table 9 : Detailed arrangements of single BWMS installed outside the cargo area

Case 1.2 (Technology category 2): Flocculation Case 1.3a (Technology category 3a): De-oxygenation with N_2 generator	See Fig 2
Case 1.3b (Technology category 3b): De-oxygenation with Inert Gas Generator	See Fig 3
Case 1.4 (Technology category 4): Full-flow electrolysis	See Fig 4
Case 1.5 (Technology category 5): Side-stream electrolysis	See Fig 5
Case 1.6 (Technology category 6): Stored chemical injection	See Fig 6
Case 1.7a (Technology category 7a): Side-stream ozone injection without gas-liquid separation tank and without discharge water treatment tank	See Fig 7
Case 1.7b (Technology category 7b): Side-stream ozone injection with gas-liquid separation tank and discharge water treatment tank	See Fig 8

Key to symbols used in Fig 2 to Fig 8:

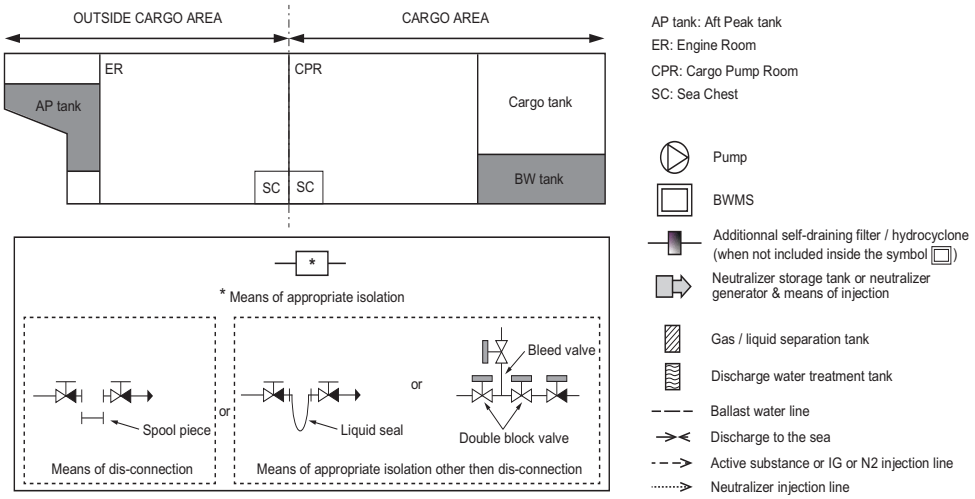

Figure 2 : Case 1.2 - Floculation and Case 1.3a - De-oxygenation with N_2 generator

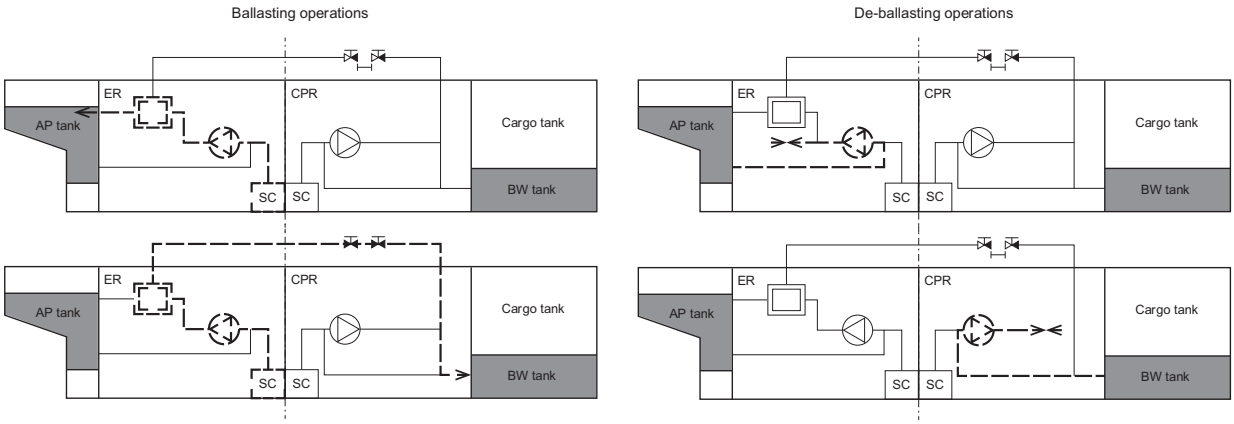

Figure 3 : Case 1.3b - De-oxygenation with Inert Gas Generator

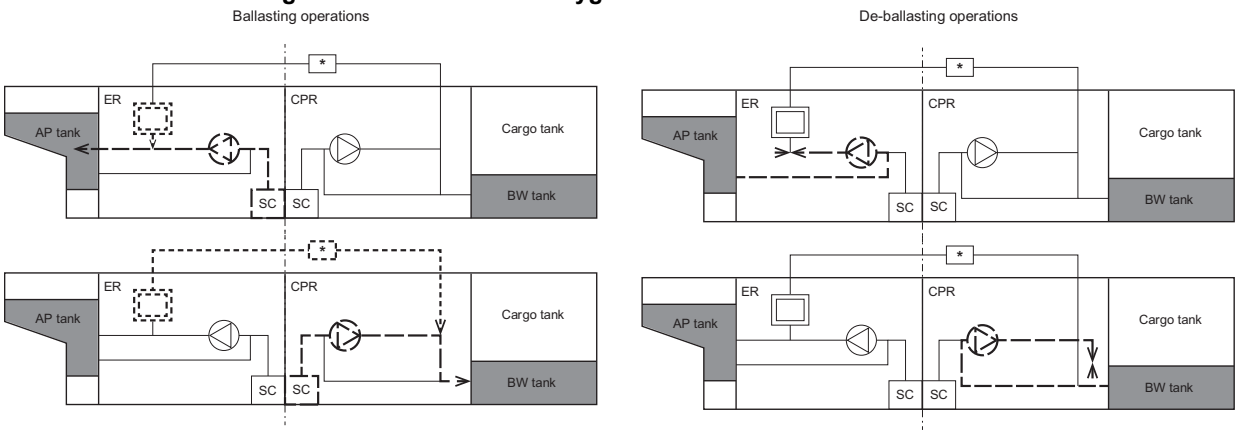

Figure 4 : Case 1.4 - Full-flow electrolysis

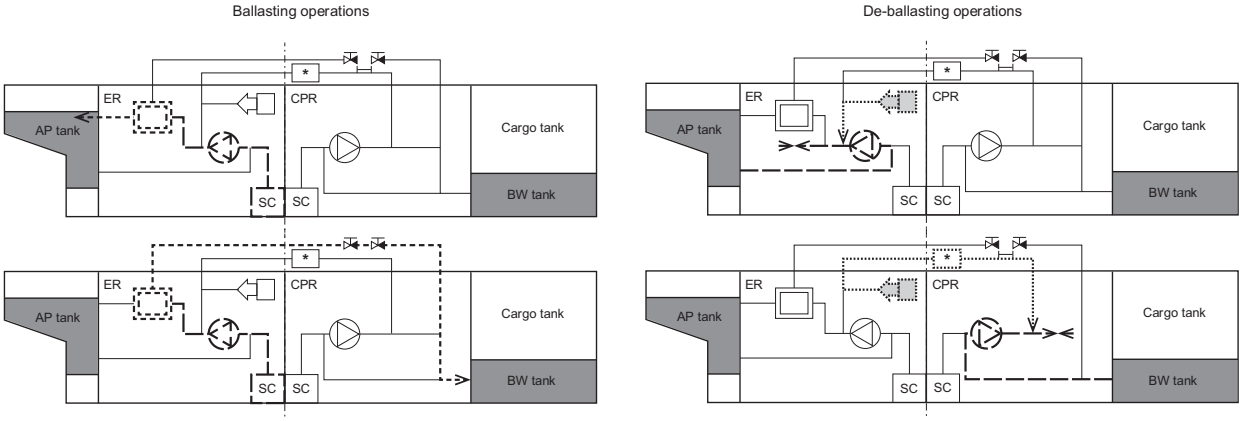

Figure 5 : Case 1.5 - Side-stream electrolysis

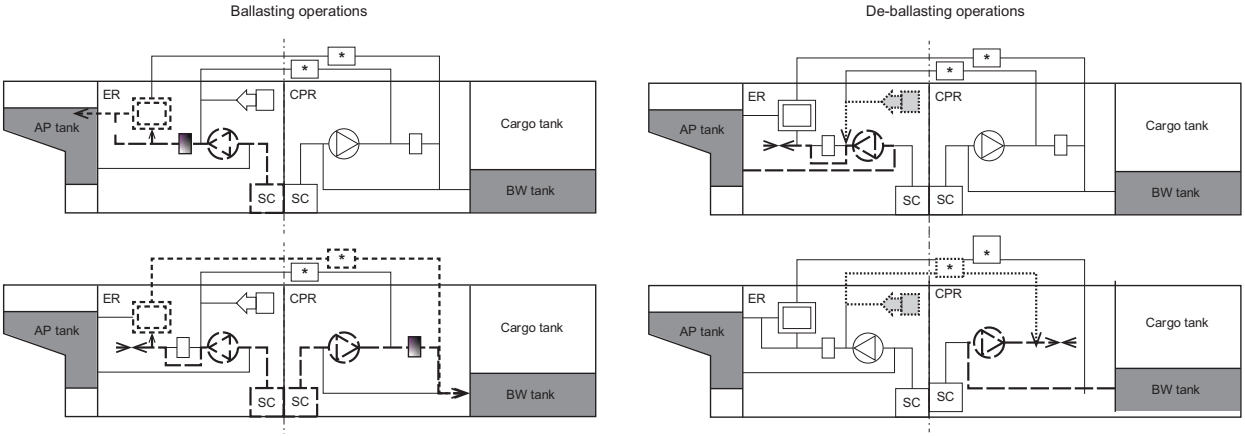

Figure 6 : Case 1.6 - Stored chemical injection

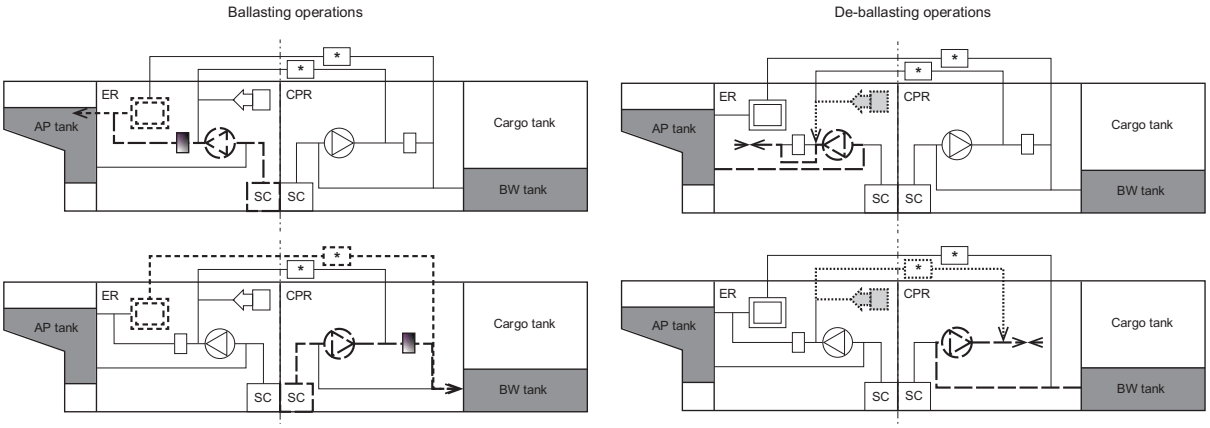

Figure 7 : Case 1.7a - Side-stream ozone injection without gas-liquid separation tank and without discharge water treatment tank

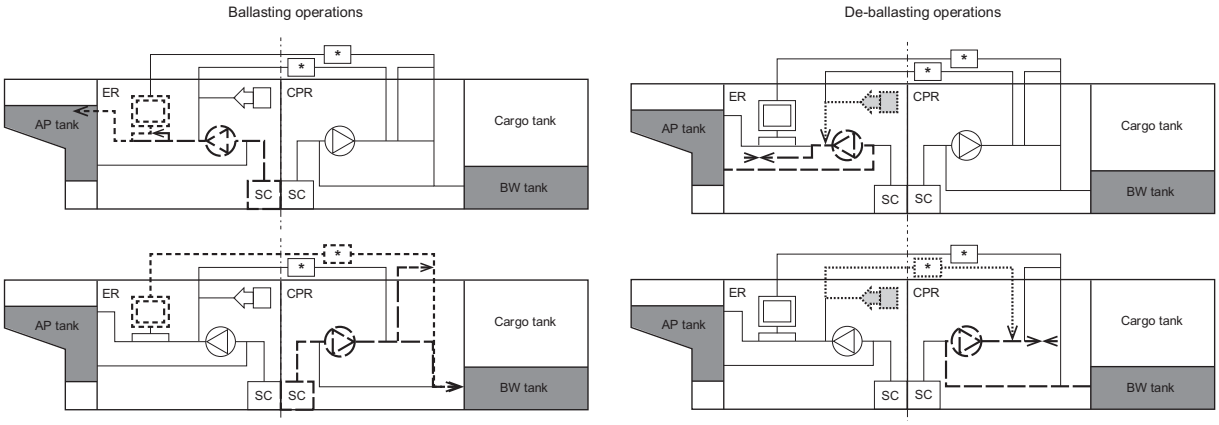

Figure 8 : Case 1.7b - Side-stream ozone injection with gas-liquid separation tank and discharge water treatment tank

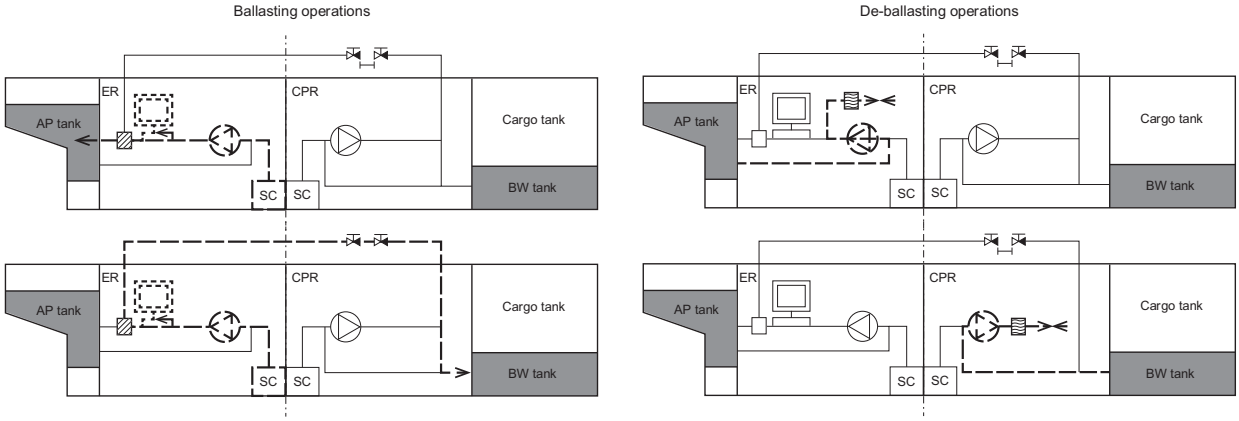

4 Special requirements for BWMS generating dangerous gas or dealing with dangerous liquids

4.1 Application

4.1.1 The provisions of this Article apply to BWMS categories 2, 3a, 3b, 3c, 4, 5, 6, 7a, 7b and 8.

4.2 BWMS involving the generation of a dangerous gas

4.2.1 Gas detection equipment is to be fitted in the spaces where dangerous gas could be present, and an audible and visual alarm is to be activated both locally and at the BWMS control station in the event of leakage.

The gas detectors are to be located as close as possible to the BWMS components where the dangerous gas may accumulate.

For flammable gases and explosive atmosphere including but not limited to H_2, the construction, testing and performance of the gas detection devices is to be in accordance with IEC 60079-29-1:2016, IEC 60079-29-2:2015, IEC 60079-29-3:2014 and / or IEC 60079-29-4:2009, as applicable.

Where other hazards are considered like toxicity, asphyxiation, corrosive and reactivity hazards, a recognized standard acceptable to the Society is to be selected with due consideration of the specific gases to be detected and due consideration of the performance of the detection device with regards to the specific atmosphere where it is used.

4.2.2 In spaces where inert gas generator systems are fitted (BWMS categories 3b and 3c) or nitrogen generators are fitted (BWMS categories 3a and 8), at least two oxygen sensors are to be positioned at appropriate locations, as required by Ch 4, Sec 15, [13.2.4], item e), 4), to alarm when the oxygen level falls below 19%. The alarms are to be both audible and visual and are to be activated:

- inside the space
- at the entry into the space
- inside the BWMS control station.

For BWMS categories 7a and 7b, at least two oxygen sensors are to be positioned at appropriate locations in the following spaces:

- spaces where ozone generators are fitted
- spaces where ozone destructors are fitted
- spaces where ozone piping is routed

to alarm when the oxygen level rises above 23%. The alarms are to be both audible and visual and are to be activated at the following locations:

- inside the space
- at the entry into the space
- inside the BWMS control station.

Automatic shutdown of the BWMS is to be arranged when the oxygen level rises above 25%. Audible and visual alarms independent from those specified in the preceding paragraph are to be activated prior to this shutdown.

4.2.3 For BWMS In-line side-stream ozone injection categories 7a and 7b, at least one ozone sensor is to be provided at the vicinity of the discharge outlet to the open deck from the ozone destructors addressed in Tab 6 to alarm when the ozone concentration level rises above 0,1 ppm. The alarms are to be both audible and visual and are to be activated in the BWMS control room. In addition, at least two ozone sensors are to be positioned at appropriate locations in the following spaces:

- spaces where ozone generators are fitted
- spaces where ozone destructors are fitted
- spaces where ozone piping is routed

to alarm when the ozone concentration level rises above 0,1 ppm. The alarms are to be both audible and visual and are to be activated at the following locations:

- inside the space
- at the entry into the space
- inside the BWMS control station.

Automatic shutdown of the BWMS is to be arranged when the ozone concentration measured from one of the two sensors inside the space rises above 0,2 ppm.

4.2.4 Inside double walled spaces or pipe ducts constructed as the special safeguard for the purpose of [4.3.1] sensors are to be provided for the detection of H_2 leakages (BWMS categories 4, 5 and 6 when relevant) or O_2 leakages (BWMS categories 7a and 7b) or O_3 leakages (BWMS categories 7a and 7b). The sensors are to activate an alarm at the high level settings and automatic shutdown of the BWMS at the high-high level settings described in [4.2.1] to [4.2.3].

Note 1: As an alternative to the sensor for the gas detection, monitored under-pressurization inside the double walled spaces or pipe ducts may be provided with an automatic alarm and shutdown of the BWMS in case of loss of the under-pressurization. The monitoring can be achieved either by monitoring the pressure inside the double walled spaces or pipe ducts or by monitoring the exhaust fan.

4.2.5 For in-line full flow electrolysis BWMS (category 4), in-line side-stream electrolysis BWMS (category 5) and in-line injection BWMS using chemical which is stored on board (category 6): the hydrogen de-gas arrangement (when provided) is to be provided with redundant ventilation fans and redundant monitoring of the ventilation system.

In addition the ventilation fan is to be certified explosion proof and have spark arrestor to avoid ignition sources to enter the ventilation systems whereas remaining H_2 gas may be present in dangerous concentrations.

Audible and visual alarms and automatic shutdown of the BWMS are to be arranged for respectively high and high-high levels of H_2. The open end of the hydrogen by-product enriched gas relieving device is to be led to a safe location on the open deck. Refer to [4.3.10].

4.2.6 The open ends of inert gas or nitrogen gas enriched air (BWMS categories 3a, 3b, 3c and 8) or oxygen-enriched air (BWMS categories 3a, 7a, 7b and 8) are to be led to a safe location on the open deck. Refer to [4.3.10].

4.3 Piping conveying dangerous gas or liquid

4.3.1 Where the piping is conveying active substances, by-products or neutralizers that are containing dangerous gases or dangerous liquids as defined respectively in [1.3.3]and [1.3.4], the following requirements are to be satisfied.

Requirement [4.3.2] to [4.3.9] is applicable to the injection lines conveying the dangerous gas or dangerous liquids but not applicable to the ballast water lines where the dangerous gas or dangerous liquids are diluted.

Note 1: The IMO reports issued during the basic and final approval procedures of the BWMS that make use of active substances (G9 Guideline) may be used for assessing the hazards that could be expected from the media conveyed by the BWMS piping.

4.3.2 Irrespective of design pressure and temperature, the piping is to be either of Class I (without special safeguard) or Class II (with special safeguard) as required by Ch 1, Sec 10, Tab 3. The selected materials, the testing of the material, the welding, the non-destructive tests of the welding, the type of connections, the hydrostatic tests and the pressure tests after assembly on board are to be as required in Ch 1, Sec 10, [2] to Ch 1, Sec 10, [5]. Mechanical joints, where allowed, are to be selected in accordance with Ch 1, Sec 10, Tab 18.

For piping class II with special safeguards conveying dangerous gas like hydrogen (H_2), oxygen (O_2) or ozone (O_3), the special safeguards are to be either double walled pipes or pipe duct. For piping class II with special safeguards conveying dangerous liquids, other special safeguards may be considered like shielding, screening, etc.

Plastic pipes may be accepted after due assessment of the dangerous gas or dangerous liquids conveyed inside. When plastic pipes are accepted, the requirements of Ch 1, App 3 apply.

4.3.3 The length of pipe and the number of connections are to be minimised.

4.3.4 Inside double walled space or pipe ducts constructed as the special safeguard for the purpose of [4.3.2] are to be equipped with mechanical exhaust ventilation leading to a safe location on the open deck. Refer to [4.3.10].

4.3.5 The routing of the piping system is to be kept away from any source of heating, ignition and any other source that could react hazardously with the dangerous gas or liquid conveyed inside. The pipes are to be suitably supported and protected from mechanical damage.

4.3.6 Pipes carrying acids are to be arranged so as to avoid any projection on crew in case of a leakage.

4.3.7 H_2 by-product enriched air vent pipes (BWMS categories 4, 5 and 6) or O_2 enriched air vent pipes (BWMS categories 3a, 7a, 7b and 8) or O_3 piping (BWMS categories 7a and 7b) are not to be routed through accommodation spaces, services spaces and control stations.

4.3.8 O_2 enriched air vent pipes (BWMS categories 3a, 7a, 7b and 8) are not to be routed through hazardous areas unless arranged inside double walled pipes or pipe ducts constructed as the special safeguard for the purpose of [4.3.2] and provided with suitable gas detection as described in [4.2.4] and mechanical exhaust ventilation as described in [4.3.4].

4.3.9 The routing of H_2 by-product enriched air vent pipes (BWMS categories 4, 5 and 6) or O_2 enriched air vent pipes (BWMS categories 3a, 7a, 7b and 8) is to be as short and straight as possible. When necessary, horizontal portions may be arranged with a minimum slope in accordance with the manufacturer's recommendation.

4.3.10 Safe locations referred to in [4.2.1] are to comply with the provisions of Tab 6.

4.4 Handling and storage of chemicals and preparations used to treat ballast water

4.4.1 Procedures

For BWMS using chemical substances or dangerous gas which are stored on board for either:

- storage or preparation of the active substances (BWMS categories 2 and 6)
- storage or preparation of the neutralizers (BWMS categories 4, 5, 6, 7a and 7b)
- recycling the wastes produced by the BWMS (BWMS category 2)

procedures are to be in accordance with the Material Safety Data Sheet and IMO Circular BWM.2/Circ.20 “Guidance to ensure safe handling and storage of chemicals and preparations used to treat ballast water and the development of safety procedures for risks to the ship and crew resulting from the treatment process”.

4.4.2 Design, construction, arrangement and testing of tanks containing chemical substances

a) The materials, inside coating used for the chemical storage tanks, piping and fittings are to be resistant to such chemicals substances.

b) Chemical substances (even if they are not defined as dangerous liquid in the sense of [1.3.4] and gas storage tanks are to be designed, constructed, tested, inspected, certified and maintained in accordance with:
   - for independent tanks permanently fixed on board containing dangerous liquids (eg. sulfuric acid H_2SO_4) or dangerous gas (eg. oxygen O_2):
     Ch 1, Sec 3
   - for independent tanks permanently fixed on board not containing dangerous liquid (eg. sodium sulphite, sodium biosulphite or sodium thiosulfphate neutralizers) and not containing dangerous gas (eg. nitrogen N_2):
     Ch 1, Sec 3 or other recognized standard accepted by the Society
   - for portable tanks:
     IMO IMDG Code or other recognized standard accepted by the Society.

c) Dangerous liquids and dangerous gas storage tank air pipes are to be led to a safe location on the open deck. Refer to [4.3.10].

d) An operation manual containing chemical injection procedures, alarm systems, measures in case of emergency, etc. is to be kept on board.

e) Dangerous liquid storage tanks and their associated components like pumps and filters, are to be provided with spill trays or secondary containment system of sufficient volume to contain potential leakages from tank openings, gauge glasses, pumps, filters and piping fittings.

   Further to the safety and/or pollution assessment of the concerned chemical substances, consideration is to be provided for segregation of the drains from such spill trays (or secondary containment system) or piping systems from engine room bilge system or from cargo pump room bilge system, as applicable. When necessary, arrangement is to be provided within the spill trays (or within the secondary containment system) for the detection of dangerous liquid or dangerous gas as defined respectively in [1.3.3] and [1.3.4].

Note 1: The IMO reports issued during the basic and final approval procedures of the BWMS that make use of active substances (G9 Guideline) may be used for this assessment.

5 Certification

5.1 Type approval and design review

5.1.1 BWMS are to be of a type approved by the Society. For this purpose:

a) They are to be type approved by the Administration according to IMO Code for approval of ballast water management systems (BWMS Code, IMO Resolution MEPC.300(72)).

Note 1: It should be noted that some flag Authorities request the IMO Type Approval to be issued on their behalf.

b) Their design is to comply with the requirements of:
- Ch 1, Sec 3 for pressure vessels
- Ch 1, Sec 10 for piping
- Ch 2, Sec 15 for the type approval tests of electrical components
- Ch 3, Sec 3 for the computer-based systems

Note 2: In general, monitoring functions of BWMS belong to system category I under the application of Ch 3, Sec 3. However, in case a bypass valve is integrated in the valve remote control system, the bypass valve belongs to the system category II Ballast transfer remote control system.

- Ch 3, Sec 6 for the type approval tests of automation systems.

The relevant documentation to be submitted is listed in Tab 10.

Table 10 : Documentation and information to be submitted for type approval of BWMS

No.	Documentation and information to be submitted	Approval status **(1)**
1	BWMS specifications / Limitations	I
2	Dedicated technical manual of the BWMS	I
3	General drawings of the BWMS	A
4	General Arrangement	A
5	Main Piping diagram	A
6	Main Electrical diagram	A
7	List of components	I
8	Manufacturer's procedures for production check and production tests	I
9	Manufacturer's procedures for onboard installation checks, onboard installation tests and installation commissioning procedures	I
10	Type approval certificates of the BWMS	I
11	Pressure vessels: Documents and information according to Ch 1, Sec 3, Tab 3	See Ch 1, Sec 3, Tab 3
12	Storage tanks for chemicals substances: detailed drawings	A
13	Piping systems: Documents according to Ch 1, Sec 10, Tab 1 and Ch 1, Sec 10, Tab 2	See Ch 1, Sec 10, Tab 1 and Ch 1, Sec 10, Tab 2
14	Electrical power and control cabinets: detailed drawings / diagrams with list of components	A
	Sensors and valve actuators:	
15	• detailed drawings / diagrams with location	A
16	• list and reference of type approval	I
17	Electrical cables: list and reference of type approval	I
(1) A: To be submitted for approval ; I: To be submitted for information.		

5.2 Risk assessment

5.2.1 A risk assessment is to be conducted in a generic manner during the design review mentioned in [5.1.1] and submitted to the Society for approval for the following BWMS categories:
- BWMS category 4: in all cases
- BWMS category 5: in all cases
- BWMS category 6: when one of the MSDS indicates that the chemical substance stored on board is either flammable, toxic, corrosive or reactive
- BWMS category 7a and 7b: in all cases.

Note 1: The IMO reports issued during the basic and final approval procedures of the BWMS that make use of active substances (G9 Guideline) may be used as a reference for this assessment.

5.2.2 The recommended risk assessment techniques for BWMS and other guidances are listed below but not limited to:
- FMEA, FMECA, HAZID, HAZOP, etc
- ISO 31010:2009 - Risk Assessment Techniques
- ISO/TS 18683:2021, Section 7: Risk assessment.

5.2.3 The risk assessment is to ensure that the equipment supplied by the BWMS's manufacturer is intrinsically safe and/or provides mitigation measures to the hazards created by the BWMS which have been identified during the design review mentioned in [5.1.1] but that need to be implemented during the installation on board.

5.3 Inspection and testing

5.3.1 A BV product certificate (Society Certificate (C)) is required for the BWMS and its components including pressure vessels, piping class I or II, filters, switchboards, etc.

5.3.2 The tests listed in Tab 11 are to be carried out with the attendance of the Surveyor.

Table 11 : Tests for BWMS to be carried out during manufacturing with the attendance of the Surveyor

Equipment to be tested	Tests to be carried out
BWMS	Functional tests: • normal operations • forced operations • test of fault alarms • test of bypass alarms • test of remote starting/stop
Pressure vessels and their fittings	Pressure test (see Ch 1, Sec 3, [9.3.2]) Water tightness test
Skid piping and relevant fittings	Pressure test (see Ch 1, Sec 10, [20.5]) Tightness test
Valves for fresh water and backwash	Pressure test (see Ch 1, Sec 10, [20.5]) Tightness test Functional test
Chemical storage tank	Hydraulic test
Sensors and valve actuators	Functional test

Section 14 Steering Gear

1 General

1.1 Application

1.1.1 Scope

Unless otherwise specified, the requirements of this Section apply to the steering gear systems of all mechanically propelled ships, and to the steering mechanism of thrusters used as means of propulsion.

1.1.2 Ships assigned the additional service feature SPxxx or SPxxx-capable

Ships assigned additional service feature **SPxxx** or **SPxxx-capable** are to comply with the requirements of this Section, considering the ship:

- as a passenger ship, when xxx is greater than 240
- as a cargo ship, when xxx is less than or equal to 240.

where:

xxx : Total number of persons onboard including crew, special personnel and passengers (maximum twelve).

1.1.3 Ships assigned the additional service feature IPxxx or IPxxx-capable

Ships assigned the additional service feature **IPxxx** or **IPxxx-capable** are to comply with the requirements of this Section, considering the ship:

- as a passenger ship, when xxx is greater than 240
- as a cargo ship, when xxx is less than or equal to 240.

where

xxx : Total number of persons onboard including crew, industrial personnel and passengers (maximum twelve).

1.1.4 Cross references

In addition to those provided in this Section, steering gear systems are also to comply with the requirements of:

- Ch 1, Sec 18, as regards sea trials
- Pt B, Ch 12, Sec 1, as regards the rudder and the rudder stock
- Pt D, Ch 7, Sec 4, [7], when fitted to oil tankers, chemical tankers or gas carriers
- Pt D, Ch 15, Sec 4, [24], when fitted to fishing vessels.

1.2 Documentation to be submitted

1.2.1 Documents to be submitted for all steering gear

Before starting construction, all plans and specifications listed in Tab 1 are to be submitted to the Society for approval.

1.2.2 Additional documents

The following additional documents are to be submitted:

- analysis in relation to the risk of single failure, where required by [2.4.2]
- analysis in relation to the risk of hydraulic locking, where required by [2.4.5]
- fatigue analysis and/or fracture mechanics analysis, where required by Pt D, Ch 7, Sec 4, [7.2.2] and Pt D, Ch 7, Sec 4, [7.3.1].

Table 1 : Documents to be submitted for steering gear

No.	I/A (2)	Description of the document (1)
1	I	Assembly drawing of the steering gear including sliding blocks, guides, stops and other similar components
2	I	General description of the installation and of its functioning principle
3	I	Operating manuals of the steering gear and of its main components
4	I	Description of the operational modes intended for steering in normal and emergency conditions
5	A	For hydraulic steering gear, the schematic layout of the hydraulic piping of power actuating systems, including the hydraulic fluid refilling system, with indication of: • the design pressure • the maximum working pressure expected in service • the diameter, thickness, material specification and connection details of the pipes • the hydraulic fluid tank capacity • the flashpoint of the hydraulic fluid
6	I	For hydraulic pumps of power units, the assembly longitudinal and transverse sectional drawings and the characteristic curves
7	A	Assembly drawings of the rudder actuators and constructional drawings of their components, with, for hydraulic actuators, indication of: • the design torque • the maximum working pressure • the relief valve setting pressure
8	I	Constructional drawings of the relief valves for protection of the hydraulic actuators, with indication of: • the setting pressure • the relieving capacity
9	A	Diagrams of the electric power circuits
10	A	Functional diagram of control, monitoring and safety systems including the remote control from the navigation bridge, with indication of the location of control, monitoring and safety devices
11	A	Constructional drawings of the strength parts providing a mechanical transmission of forces to the rudder stock (tiller, quadrant, connecting rods and other similar items), with the calculation notes of the shrink-fit connections
12	I/A	For azimuth thrusters used as steering means, the specification and drawings of the steering mechanism and, where applicable, documents 2 to 6 and 8 to 11 above

(1) Constructional drawings are to be accompanied by the specification of the materials employed and, where applicable, by the welding details and welding procedures.
(2) A = to be submitted for approval ; I = to be submitted for information.

1.3 Definitions

1.3.1 Steering system

Steering system means ship's directional control system, including main steering gear, auxiliary steering gear, steering gear control system and rudder if any.

1.3.2 Steering gear control system

Steering gear control system is the equipment by which orders are transmitted from the navigation bridge to the steering gear power units. Steering gear control systems comprise transmitters, receivers, hydraulic control pumps and their associated motors, motor controllers, piping and cables.

Steering gear control system is also understood to cover the equipment required to control the steering gear power actuating system.

1.3.3 Main steering gear

Main steering gear is the machinery, rudder actuators, steering gear power units, if any, and ancillary equipment and the means of applying torque to the rudder stock (e.g. tiller or quadrant) necessary for effecting movement of the rudder for the purpose of steering the ship under normal service conditions.

1.3.4 Steering gear power unit

Steering gear power unit is:

- *in the case of electric steering gear, an electric motor and its associated electrical equipment*
- *in the case of electrohydraulic steering gear, an electric motor and its associated electrical equipment and connected pump*
- *in the case of other hydraulic steering gear, a driving engine and connected pump.*

1.3.5 Auxiliary steering gear

Auxiliary steering gear is the equipment other than any part of the main steering gear necessary to steer the ship in the event of failure of the main steering gear but not including the tiller, quadrant or components serving the same purpose.

1.3.6 Power actuating system

Power actuating system is the hydraulic equipment provided for supplying power to turn the rudder stock, comprising a steering gear power unit or units, together with the associated pipes and fittings, and a rudder actuator. The power actuating systems may share common mechanical components, i.e. tiller, quadrant and rudder stock, or components serving the same purpose.

1.3.7 Rudder actuator

Rudder actuator is the component which directly converts hydraulic pressure into mechanical action to move the rudder.

1.3.8 Maximum ahead service speed

Maximum ahead service speed is the greatest speed which the ship is designed to maintain in service at sea at the deepest seagoing draught.

1.3.9 Maximum astern speed

Maximum astern speed is the speed which it is estimated the ship can attain at the designed maximum astern power at the deepest seagoing draught.

1.3.10 Maximum working pressure

Maximum working pressure is the maximum expected pressure in the system when the steering gear is operated to comply with the provisions of [2.2.1], item b).

1.3.11 Hydraulic locking

Hydraulic locking means all situations where two hydraulic systems (usually identical) oppose each other in such a way that it may lead to loss of steering. It can either be caused by pressure in the two hydraulic systems working against each other or by hydraulic "bypass" meaning that the systems puncture each other and cause pressure drop on both sides or make it impossible to build up pressure.

1.4 Symbols

1.4.1 The following symbols are used for strength criteria of steering gear components:

V : Maximum service speed, in knots, with the ship on summer load waterline. When the speed is less than 10 knots, V is to be replaced by the value (V+20)/3

d_s : Rule diameter of the rudder stock in way of the tiller, in mm, defined in Pt B, Ch 12, Sec 1, [4] and calculated with a material factor $k_1 = 1$

d_{se} : Actual diameter of the upper part of the rudder stock in way of the tiller, in mm
(in the case of a tapered coupling, this diameter is measured at the base of the assembly)

T_R : Rule design torque of the rudder stock given, in kN.m, by the following formula:

$$T_R = 13{,}5 \cdot d_s^3 \cdot 10^{-6}$$

T_E : For hand emergency operation, design torque due to forces induced by the rudder, in kN.m, given by the following formulae:

$$T_E = 0{,}62 \cdot \left(\frac{V_E + 2}{V + 2}\right)^2 \cdot T_R$$

where:

- $V_E = 7$ where $V \le 14$
- $V_E = 0{,}5\ V$ where $V > 14$

T_G : For main hydraulic or electrohydraulic steering gear, torque induced by the main steering gear on the rudder stock when the pressure is equal to the setting pressure of the relief valves protecting the rudder actuators

Note 1: for hand-operated main steering gear, the following value is to be used:
$T_G = 1{,}25.T_R$

T_A : For auxiliary hydraulic or electrohydraulic steering gears, torque induced by the auxiliary steering gear on the rudder stock when the pressure is equal to the setting pressure of the relief valves protecting the rudder actuators

Note 2: for hand-operated auxiliary steering gear, the following value is to be used:
$T_A = 1{,}25.T_E$

T'_G : For steering gear which can activate the rudder with a reduced number of actuators, the value of T_G in such conditions

σ : Normal stress due to the bending moments and the tensile and compressive forces, in N/mm²

τ : Tangential stress due to the torsional moment and the shear forces, in N/mm²

σ_a : Permissible stress, in N/mm²

σ_c : Combined stress, determined by the following formula:

$$\sigma_c = \sqrt{\sigma^2 + 3\tau^2}$$

R : Value of the minimum specified tensile strength of the material at ambient temperature, in N/mm²

R_e : Value of the minimum specified yield strength of the material at ambient temperature, in N/mm²

R'_e : Design yield strength, in N/mm², determined by the following formulae:

- $R'_e = R_e$, where $R \geq 1,4\ R_e$
- $R'_e = 0,417\ (R_e + R)$ where $R < 1,4\ R_e$

2 Design and construction

2.1 General

2.1.1 *Unless expressly provided otherwise, every ship shall be provided with main steering gear and auxiliary steering gear to the satisfaction of the Society.*

2.2 Strength, performance and power operation of the steering gear

2.2.1 Main steering gear

The main steering gear and rudder stock shall be:

a) of adequate strength and capable of steering the ship at maximum ahead service speed which shall be demonstrated

b) capable of putting the rudder over from 35° on one side to 35° on the other side with the ship at its deepest seagoing draught and running ahead at maximum ahead service speed and, under the same conditions, from 35° on either side to 30° on the other side in not more than 28 s

Where it is impractical to demonstrate compliance with this requirement during sea trials with the ship at its deepest seagoing draught and running ahead at the speed corresponding to the number of maximum continuous revolutions of the main engine and maximum design pitch, ships may demonstrate compliance with this requirement by one of the following methods:

1) during sea trials the ship is at even keel and the rudder fully submerged whilst running ahead at the speed corresponding to the number of maximum continuous revolutions of the main engine and maximum design pitch; or

Note 1: "even keel" means that the vessel is an acceptable trim condition

Note 2: "fully submerged" means A_T is greater than $0.95 \cdot A_F$, where A_T and A_F are defined in [2.2.3].

2) where full rudder immersion during sea trials cannot be achieved, an appropriate ahead speed shall be calculated using the submerged rudder blade area in the proposed sea trial loading condition. The calculated ahead speed shall result in a force and torque applied to the main steering gear which is at least as great as if it was being tested with the ship at its deepest seagoing draught and running ahead at the speed corresponding to the number of maximum continuous revolutions of the main engine and maximum design pitch; or

3) the rudder force and torque at the sea trial loading condition have been reliably predicted and extrapolated to the full load condition. The speed of the ship shall correspond to the number of maximum continuous revolutions of the main engine and maximum design pitch of the propeller;

Specific requirements of [2.2.3] are to be applied for trials not performed at full load condition*;*

c) operated by power where necessary to meet the requirements of b) *and in any case when the Society requires a rudder stock of over 120 mm diameter in way of the tiller, excluding strengthening for navigation in ice, and*

d) so designed that they will not be damaged at maximum astern speed; however, this design requirement need not be proved by trials at maximum astern speed and maximum rudder angle.

Note 3: The mentioned diameter is to be taken as having been calculated for rudder stock of mild steel with a yield stress of 235 N/mm², i.e. with a material factor $k_1 = 1$.

2.2.2 Auxiliary steering gear

The auxiliary steering gear and rudder stock shall be:

a) of adequate strength and capable of steering the ship at navigable speed and of being brought speedily into action in an emergency

b) capable of putting the rudder over from 15° on one side to 15° on the other side in not more than 60s with the ship at its deepest seagoing draught and running ahead at one half of the maximum ahead service speed or 7 knots, whichever is the greater.

Where it is impractical to demonstrate compliance with this requirement during sea trials with the ship at its deepest seagoing draught and running ahead at one half of the speed corresponding to the number of maximum continuous revolutions of the main engine and maximum design pitch or 7 knots, whichever is greater, ships may demonstrate compliance with this requirement by one of the following methods:

1) *during sea trials the ship is at even keel and the rudder fully submerged whilst running ahead at one half of the speed corresponding to the number of maximum continuous revolutions of the main engine and maximum design pitch or 7 knots, whichever is greater; or*

Note 1: "even keel" means that the vessel is an acceptable trim condition.

Note 2: "fully submerged" means A_T is greater than $0.95 \cdot A_F$, where AT and AF are defined in [2.2.3].

2) *where full rudder immersion during sea trials cannot be achieved, an appropriate ahead speed shall be calculated using the submerged rudder blade area in the proposed sea trial loading condition. The calculated ahead speed shall result in a force and torque applied to the auxiliary steering gear which is at least as great as if it was being tested with the ship at its deepest seagoing draught and running ahead at one half of the speed corresponding to the number of maximum continuous revolutions of the main engine and maximum design pitch or 7 knots, whichever is greater; or*

3) *the rudder force and torque at the sea trial loading condition have been reliably predicted and extrapolated to the full load condition;*

   Specific requirements of [2.2.3] are to be applied for trials not performed at full load condition;

and

c) *operated by power where necessary to meet the requirements of* b) *and in any case when the Society requires a rudder stock of over 230 mm diameter in way of the tiller, excluding strengthening for navigation in ice.*

Note 3: The mentioned diameter is to be taken as having been calculated for rudder stock of mild steel with a yield stress of 235 N/mm², i.e. with a material factor $k_1 = 1$.

2.2.3 Steering gear test with the vessel not at the deepest seagoing draught

In order to meet the performance stated in item b) of [2.2.1] and item b) of [2.2.2] the following requirements are applicable.

When it is justified that the trials cannot practically be performed with the vessel at the deepest seagoing draught, the loading condition can be accepted on the conditions that:

a) The estimated steering actuator hydraulic pressure in the deepest seagoing draught condition P_F has been extrapolated from the maximum measured actuator hydraulic pressure in the trial condition P_T using one of the following methods:

1) P_F is obtained according to the following formula:

$$P_F = P_T \cdot \alpha$$

$$\alpha = 1{,}25\left(\frac{A_F}{A_T}\right)\left(\frac{V_F}{V_T}\right)^2$$

where:

P_F	:	estimated steering actuator hydraulic pressure in the deepest seagoing draught condition
P_T	:	maximum measured actuator hydraulic pressure in the trial condition.
α	:	extrapolation factor
A_F	:	total immersed projected area of the movable part of the rudder in the deepest seagoing condition
A_T	:	total immersed projected area of the movable part of the rudder in the trial condition
V_F	:	contractual design speed of the vessel corresponding to the maximum continuous revolutions of the main engine at the deepest seagoing draught
V_T	:	measured speed of the vessel (considering current) in the trial condition.

Note 1: Above formulae assumes that the rudder actuator system pressure is shown to have a linear relationship to the rudder stock torque.

2) The following methodology is applied for determination of P_F:

- The designer or builder uses computational fluid dynamic (CFD) studies or experimental investigations to predict the estimated rudder stock moment at the full sea going draught condition and service speed Q_F

  These calculations or experimental investigations are to be to the satisfaction of the Society.
- the rudder torque at the trial loading condition Q_T have been reliably predicted based on the maximum measured actuator hydraulic pressure in the trial condition P_T
- The estimated steering actuator hydraulic pressure in the deepest seagoing draught condition is obtained according to the following formula:

$$P_F = P_T \frac{Q_F}{Q_T}$$

b) Where constant volume fixed displacement pumps are utilised, the estimated steering actuator hydraulic pressure at the deepest draught P_F is to be less than the specified maximum working pressure of the rudder actuator.

Where a variable delivery pump is utilised, the pump data is to be supplied and interpreted to estimate the delivered flow rate corresponding to the deepest seagoing draught in order to calculate the estimated steering time, not to be greater than to the required time specified in [2.2.1] or [2.2.2], as applicable.

c) In any case for the main steering gear trial, the speed of the ship corresponding to the number of maximum continuous revolution of main engine and maximum design pitch applies.

2.3 Control of the steering gear

2.3.1 Main and auxiliary steering gear control

Steering gear control shall be provided:

a) for the main steering gear, both on the navigation bridge and in the steering gear compartment

b) where the main steering gear is arranged in accordance with [2.4.2], by two independent control systems, both operable from the navigation bridge and the steering gear compartment. This does not require duplication of the steering wheel or steering lever. Where the control system consists in a hydraulic telemotor, a second independent system need not be fitted, except in a tanker, chemical tanker or gas carrier of 10 000 gross tonnage and upwards

The two independent steering gear control systems are to be:

- so arranged that a mechanical or electrical failure in one of them will not render the other one inoperative, and
- in accordance with [2.3.3]

c) for the auxiliary steering gear, in the steering gear compartment and, if power operated, it shall also be operable from the navigation bridge and to be independent of the control system for the main steering gear.

Note 1: The term "steering gear control system" is to be understood to cover "the equipment required to control the steering gear power actuating system".

2.3.2 Control systems operable from the navigation bridge

Any main and auxiliary steering gear control system operable from the navigation bridge shall comply with the following:

- *if electrical, it shall be served by its own separate circuit supplied from a steering gear power circuit from a point within the steering gear compartment, or directly from switchboard busbars supplying that steering gear power circuit at a point on the switchboard adjacent to the supply to the steering gear power circuit*
- *means shall be provided in the steering gear compartment for disconnecting any control system operable from the navigation bridge from the steering gear it serves*
- *the system shall be capable of being brought into operation from a position on the navigation bridge*
- *in the event of failure of electrical power supply to the control system, an audible and visual alarm shall be given on the navigation bridge, and*
- *short-circuit protection only shall be provided for steering gear control supply circuits.*

2.3.3 Installation

a) Duplicated steering gear control systems with their associated components are to be separated as far as practicable.

b) Wires, terminals and the components for duplicated steering gear control systems installed in units, control boxes, switchboards or bridge consoles are to be separated as far as practicable.

Where physical separation is not practicable, separation may be achieved by means of a fire-retardant plate.

c) All electrical components of the steering gear control systems are to be duplicated. This does not require duplication of the steering wheel or steering lever.

d) If a joint steering mode selector switch (uniaxial switch) is employed for both steering gear control systems, the connections for the control systems are to be divided accordingly and separated from each other by an isolating plate or air gap.

e) In the case of double follow-up control, the amplifier is to be designed and fed so as to be electrically and mechanically separated. In the case of non-follow-up control and follow-up control, it is to be ensured that the follow-up amplifier is protected selectively.

f) Control circuits for additional control systems, e.g. steering lever or autopilot, are to be designed for all-pole disconnection.

g) The feedback units and limit switches, if any, for the steering gear control systems are to be separated electrically and mechanically connected to the rudder stock or actuator separately.

2.4 Availability

2.4.1 Arrangement of main and auxiliary steering gear

The main steering gear and the auxiliary steering gear shall be so arranged that the failure of one will not render the other inoperative.

2.4.2 Omission of the auxiliary steering gear

Where the main steering gear comprises two or more identical power units, auxiliary steering gear need not be fitted, provided that:

a) in a passenger ship, the main steering gear is capable of operating the rudder as required in [2.2.1] *while any one of the power units is out of operation*

b) in a cargo ship, the main steering gear is capable of operating the rudder as required in [2.2.1] *while operating with all power units*

c) the main steering gear is so arranged that after a single failure in its piping system or in one of the power units, the defect can be isolated so that steering capability can be maintained or speedily regained.

Steering gear other than of the hydraulic type is to achieve standards equivalent to the requirements of this paragraph to the satisfaction of the Society.

2.4.3 Hydraulic power supply

The hydraulic system intended for main and auxiliary steering gear is to be independent of all other hydraulic systems of the ship.

2.4.4 Non-duplicated components

Special consideration is to be given to the suitability of any essential component which is not duplicated.

2.4.5 Hydraulic locking

Where the steering gear is so arranged that more than one system (either power or control) can be simultaneously operated, the risk of hydraulic locking caused by single failure is to be considered.

2.4.6 Additional requirements for ships of 70 000 gross tonnage and above

In ships of 70,000 gross tonnage and upwards, the main steering gear shall comprise two or more identical power units complying with the provisions of [2.4.2].

2.5 Mechanical components

2.5.1 General

a) All steering gear components and the rudder stock are to be of sound and reliable construction to the satisfaction of the Society.

b) Any non-duplicated essential component is, where appropriate, to utilise anti-friction bearings, such as ball bearings, roller bearings or sleeve bearings, which are to be permanently lubricated or provided with lubrication fittings

c) The construction is to be such as to minimise local concentration of stress.

d) All steering gear components transmitting mechanical forces to the rudder stock, which are not protected against overload by structural rudder stops or mechanical buffers, are to have a strength at least equivalent to that of the rudder stock in way of the tiller.

2.5.2 Materials and welds

a) All steering gear components transmitting mechanical forces to the rudder stock (such as tillers, quadrants, or similar components) are to be of steel or other approved ductile material complying with the requirements of NR216 Materials and Welding. In general, such material is to have an elongation of not less than 12% and a tensile strength not greater than 650 N/mm^2.

b) The use of grey cast iron is not permitted, except for redundant parts with low stress level, subject to special consideration by the Society. It is not permitted for cylinders.

c) The welding details and welding procedures are to be submitted for approval.

d) All welded joints within the pressure boundary of a rudder actuator or connecting parts transmitting mechanical loads are to be full penetration type or of equivalent strength.

2.5.3 Scantling of components

The scantling of steering gear components is to be determined considering the design torque M_T and the permissible value σ_a of the combined stress, as given in:

- Tab 2 for components which are protected against overloads induced by the rudder
- Tab 3 for components which are not protected against overloads induced by the rudder.

Table 2 : Scantling of components protected against overloads induced by the rudder

Conditions of use of the components	M_T	σ_a
Normal operation	T_G	• if $T_G \le 1,25\ T_R$: $\sigma_a = 1,25\ \sigma_0$ • if $1,25\ T_R < T_G < 1,50\ T_R$: $\sigma_a = \sigma_0\ T_G/T_R$ • if $T_G \ge 1,50\ T_R$: $\sigma_a = 1,50\ \sigma_0$ where $\sigma_0 = 0,55\ R'_e$
Normal operation, with a reduced number of actuators	T'_G	• if $T'_G \le 1,25\ T_R$: $\sigma_a = 1,25\ \sigma_0$ • if $1,25\ T_R < T'_G < 1,50\ T_R$: $\sigma_a = \sigma_0\ T_G/T_R$ • if $T'_G \ge 1,50\ T_R$: $\sigma_a = 1,50\ \sigma_0$ where $\sigma_0 = 0,55\ R'_e$
Emergency operation achieved by hydraulic or electrohydraulic steering gear	lower of T_R and $0,8\ T_A$	$0,69\ R'_e$
Emergency operation, with a reduced number of actuators	lower of T_R and $0,8\ T'_G$	$0,69\ R'_e$
Emergency operation achieved by hand	T_E	$0,69\ R'_e$

Table 3 : Scantling of components not protected against overloads induced by the rudder

Conditions of use of the components	M_T	σ_a
Normal operation	T_R	$0,55\ R'_e$
Normal operation, with a reduced number of actuators	lower of T_R and $0,8\ T'_G$	$0,55\ R'_e$
Emergency operation achieved by hydraulic or electrohydraulic steering gear	lower of T_R and $0,8\ T_A$	$0,69\ R'_e$
Emergency operation, with a reduced number of actuators	lower of T_R and $0,8\ T'_G$	$0,69\ R'_e$
Emergency operation achieved by hand	T_E	$0,69\ R'_e$

2.5.4 Tillers, quadrants and rotors

a) The scantling of the tiller is to be determined as follows:

- the depth H_0 of the boss is not to be less than $0,75.d_s$
- the radial thickness of the boss in way of the tiller is not to be less than the greater of:
  - $0,3 \cdot d_s \cdot \sqrt{\frac{235}{R'_e}}$
  - $0,25 \cdot d_s$
- the section modulus of the tiller arm in way of the end fixed to the boss is not to be less than the value Z_b, in cm^3, calculated from the following formula:

$$Z_b = \frac{0,147 \cdot d_s^3}{1000} \cdot \frac{L'}{L} \cdot \frac{R_e}{R'_e}$$

where:

L : Distance from the centreline of the rudder stock to the point of application of the load on the tiller (see Fig 1)

L′ : Distance between the point of application of the above load and the root section of the tiller arm under consideration (see Fig 1)

- the width and thickness of the tiller arm in way of the point of application of the load are not to be less than one half of those required by the above formula
- in the case of double arm tillers, the section modulus of each arm is not to be less than one half of the section modulus required by the above formula.

Figure 1 : Tiller arm

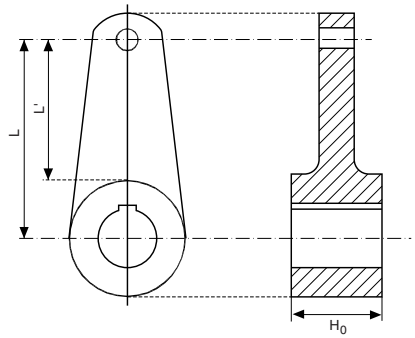

b) The scantling of the quadrants is to be determined as specified in a) for the tillers. When quadrants having two or three arms are provided, the section modulus of each arm is not to be less than one half or one third, respectively, of the section modulus required for the tiller.

Arms of loose quadrants not keyed to the rudder stock may be of reduced dimensions to the satisfaction of the Society, and the depth of the boss may be reduced by 10 per cent.

c) Keys are to satisfy the following provisions:

- the key is to be made of steel with a yield stress not less than that of the rudder stock and that of the tiller boss or rotor without being less than 235 N/mm²
- the width of the key is not to be less than $0,25.d_s$
- the thickness of the key is not to be less than $0,10.d_s$
- the ends of the keyways in the rudder stock and in the tiller (or rotor) are to be rounded and the keyway root fillets are to be provided with small radii of not less than 5 per cent of the key thickness.

d) Bolted tillers and quadrants are to satisfy the following provisions:

- the diameter of the bolts is not to be less than the value d_b, in mm, calculated from the following formula:

$$d_b = 153\sqrt{\frac{T_R}{n(b+0,5d_{se})}\cdot\frac{235}{R_{eb}}}$$

where:

n : Number of bolts located on the same side in respect of the stock axis (n is not to be less than 2)

b : Distance between bolts and stock axis, in mm (see Fig 2)

R_{eb} : Yield stress, in N/mm², of the bolt material

Figure 2 : Bolted tillers

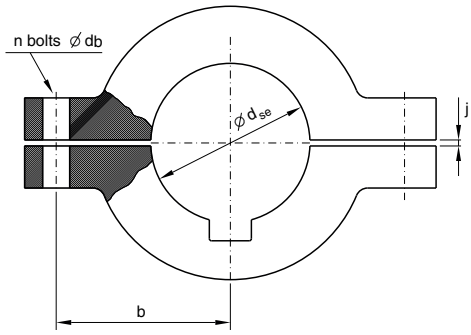

- the thickness of each of the tightening flanges of the two parts of the tiller is not to be less than the following value:

$$1,85\cdot d_b\cdot\sqrt{\frac{n\cdot(b-0,5\cdot D_e)}{H_0}\cdot\frac{R_{eb}}{R'_e}}$$

Where:

D_e : External boss diameter, in mm (average value)

- in order to ensure the efficient tightening of the coupling around the stock, the two parts of the tiller are to bored together with a shim having a thickness not less than the value j, in mm, calculated from the following formula:

$j = 0,0015\cdot d_s$

e) Shrink-fit connections of tiller (or rotor) to stock are to satisfy the following provisions:
- the safety factor against slippage is not to be less than:
  - 1 for keyed connections
  - 2 for keyless connections
- the friction coefficient is to be taken equal to:
  - 0,15 for steel and 0,13 for spheroidal graphite cast iron, in the case of hydraulic fit
  - 0,17 in the case of dry shrink fitting
- the combined stress according to the von Mises criterion, due to the maximum pressure induced by the shrink fitting and calculated in way of the most stressed points of the shrunk parts, is not to exceed 80 per cent of the yield stress of the material considered

Note 1: Alternative stress values based on FEM calculations may also be considered by the Society.

- the entrance edge of the tiller bore and that of the rudder stock cone are to be rounded or bevelled.

2.5.5 Piston rods

The scantling of the piston rod is to be determined taking into account the bending moments, if any, in addition to compressive or traction forces and is to satisfy the following provisions:

a) $\sigma_c \le \sigma_a$

where:

σ_c : Combined stress as per [1.4.1]

σ_a : Permissible stress as per [2.5.3]

b) in respect of the buckling strength:

$$\frac{4}{\pi D_2^2} \cdot \left(\omega F_c + \frac{8M}{D_2}\right) \le 0{,}9\sigma_a$$

with:

D_2 : Piston rod diameter, in mm

F_c : Compression force in the rod, in N, when it extends to its maximum stroke

M : Possible bending moment in the piston rod, in N.mm, in way of the fore end of the cylinder rod bearing

$$\omega = \beta + \sqrt{\beta^2 - \alpha}$$

$$\alpha = 0{,}0072\left(\frac{\ell_s}{D_2}\right)^2 \frac{R'_e}{235}$$

$$\beta = 0{,}48 + 0{,}5\alpha + 0{,}1\sqrt{\alpha}$$

ℓ_s : Length, in mm, of the maximum unsupported reach of the cylinder rod.

2.6 Hydraulic system

2.6.1 General

a) The design pressure for calculations to determine the scantlings of piping and other steering gear components subjected to internal hydraulic pressure shall be at least 1,25 times the maximum working pressure to be expected under the operational conditions specified in [3], taking into account any pressure which may exist in the low pressure side of the system.

At the discretion of the Society, high cycle and cumulative fatigue analysis may be required for the design of piping and components, taking into account pulsating pressures due to dynamic loads.

b) The power piping for hydraulic steering gear is to be arranged so that transfer between units can be readily effected.

c) Arrangements for bleeding air from the hydraulic system are to be provided, where necessary.

d) The hydraulic piping system, including joints, valves, flanges and other fittings, is to comply with the requirements of Ch 1, Sec 10 for class I piping systems, and in particular with the requirements of Ch 1, Sec 10, [14], unless otherwise stated.

2.6.2 Materials

a) Ram cylinders, pressure housings of rotary vane type actuators, hydraulic power piping, valves, flanges and fittings are to be of steel or other approved ductile material.

b) In general, such material is to have an elongation of not less than 12% and a tensile strength not greater than 650 N/mm^2.

Grey cast iron may be accepted for valve bodies and redundant parts with low stress level, excluding cylinders, subject to special consideration.

2.6.3 Isolating valves

Shut-off valves, non-return valves or other appropriate devices are to be provided:

- to comply with the availability requirements of [2.4]
- to keep the rudder steady in position in case of emergency.

In particular, for all ships with non-duplicated actuators, isolating valves are to be fitted at the connection of pipes to the actuator, and are to be directly fitted on the actuator.

2.6.4 Flexible hoses

a) Flexible hoses may be installed between two points where flexibility is required but are not to be subjected to torsional deflexion (twisting) under normal operation. In general, the hose is to be limited to the length necessary to provide for flexibility and for proper operation of machinery.

b) Hoses are to be high pressure hydraulic hoses according to recognised standards and suitable for the fluids, pressures, temperatures and ambient conditions in question.

c) They are to be of a type approved by the Society.

d) The burst pressure of hoses is to be not less than four times the design pressure.

2.6.5 Relief valves

a) Relief valves shall be fitted to any part of the hydraulic system which can be isolated and in which pressure can be generated from the power source or from external forces. The setting of the relief valves shall not exceed the design pressure. The valves shall be of adequate size and so arranged as to avoid an undue rise in pressure above the design pressure.

b) The setting pressure of the relief valves is not to be less than 1,25 times the maximum working pressure.

c) The minimum discharge capacity of the relief valve(s) is not to be less than the total capacity of the pumps which can deliver through it (them), increased by 10%. Under such conditions, the rise in pressure is not to exceed 10% of the setting pressure. In this respect, due consideration is to be given to the foreseen extreme ambient conditions in relation to oil viscosity.

2.6.6 Hydraulic oil reservoirs

Hydraulic power-operated steering gear shall be provided with the following:

- *a low level alarm for each hydraulic fluid reservoir to give the earliest practicable indication of hydraulic fluid leakage. Audible and visual alarms shall be given on the navigation bridge and in the machinery space where they can be readily observed.*
- *a fixed storage tank having sufficient capacity to recharge at least one power actuating system including the reservoir, where the main steering gear is required to be power operated. The storage tank shall be permanently connected by piping in such a manner that the hydraulic systems can be readily recharged from a position within the steering gear compartment and shall be provided with a contents gauge.*

Note 1: For cargo ships of less than 500 gross tonnage and for fishing vessels, the storage means may consist of a readily accessible drum, of sufficient capacity to refill one power actuating system if necessary.

2.6.7 Hydraulic pumps

a) Hydraulic pumps are to be type tested in accordance with the provisions of [6.1.1].

b) Special care is to be given to the alignment of the pump and the driving motor.

2.6.8 Filters

a) Hydraulic power-operated steering gear shall be provided with arrangements to maintain the cleanliness of the hydraulic fluid taking into consideration the type and design of the hydraulic system.

b) Filters of appropriate mesh fineness are to be provided in the piping system, in particular to ensure the protection of the pumps.

2.6.9 Accumulators

Accumulators, if fitted, are to be designed in accordance with Ch 1, Sec 10, [14.5.3].

2.6.10 Rudder actuators

a) Rudder actuators, other than non-duplicated rudder actuators fitted to tankers, chemical carriers and gas carriers of 10000 gross tonnage and above, are to be designed in accordance with the relevant requirements of Ch 1, Sec 3 for class 1 pressure vessels also considering the following provisions.

b) The permissible primary general membrane stress is not to exceed the lower of the following values:

$$\frac{R}{A} \quad \text{or} \quad \frac{R_e}{B}$$

where A and B are given in Tab 4.

c) Oil seals between non-moving parts, forming part of the external pressure boundary, are to be of the metal upon metal or equivalent type.

d) Oil seals between moving parts, forming part of the external pressure boundary, are to be duplicated, so that the failure of one seal does not render the actuator inoperative. Alternative arrangements providing equivalent protection against leakage may be accepted.

e) The strength and connection of the cylinder heads (or, in the case of actuators of the rotary type, the fixed vanes) acting as rudder stops are to comply with the provisions of [5.3.1].

Table 4 : Value of coefficients A and B

Coefficient	Steel	Cast steel	Nodular cast iron
A	3,5	4	5
B	1,7	2	3

2.7 Electrical systems

2.7.1 General design

The electrical systems of the main steering gear and the auxiliary steering gear are to be so arranged that the failure of one will not render the other inoperative.

2.7.2 Power circuit supply

a) Electric or electrohydraulic steering gear comprising one or more power units is to be served by at least two exclusive circuits fed directly from the main switchboard; however, one of the circuits may be supplied through the emergency switchboard.

b) Auxiliary electric or electrohydraulic steering gear, associated with main electric or electrohydraulic steering gear, may be connected to one of the circuits supplying the main steering gear.

c) The circuits supplying electric or electrohydraulic steering gear are to have adequate rating for supplying all motors which can be simultaneously connected to them and may be required to operate simultaneously.

d) When, in a ship of less than 1600 gross tonnage, auxiliary steering gear which is required by [2.2.2], item c) to be operated by power is not electrically powered or is powered by an electric motor primarily intended for other services, the main steering gear may be fed by one circuit from the main switchboard.

e) Where the rudder stock is required to be over 230 millimetres in diameter in way of the tiller, excluding strengthening for navigation in ice, an alternative power supply either from the emergency source of electrical power or from an independent source of power located in the steering gear compartment is to be provided, sufficient at least to supply the steering gear power unit such that the latter is able to perform the duties of auxiliary steering gear.

This power source is to be activated automatically, within 45 seconds, in the event of failure of the main source(s) of electrical power.

The independent source is to be used only for this purpose.

The alternative power source is also to supply the steering gear control system, the remote control of the power unit and the rudder angle indicator.

f) In every ship of 10 000 gross tonnage and upwards, the alternative power supply is to have a capacity for at least 30 minutes of continuous operation and in any other ship for at least 10 minutes.

2.7.3 Motors and associated control gear

a) To determine the required characteristics of the electric motors for power units, the breakaway torque and maximum working torque of the steering gear under all operating conditions are to be considered. The ratio of pull-out torque to rated torque is to be at least 1,6.

b) Motors for steering gear power units may be rated for intermittent power demand.

The rating is to be determined on the basis of the steering gear characteristics of the ship in question; the rating is always to be at least:

- S3 - 40% for motors of electric steering gear power units
- S6 - 25% for motors of electrohydraulic steering gear power units and for convertors.

c) Each electric motor of a main or auxiliary steering gear power unit is to be provided with its own separate motor starter gear, located within the steering gear compartment.

2.7.4 Supply of motor control circuits and steering gear control systems

a) Each control for starting and stopping of motors for power units is to be served by its own control circuits supplied from its respective power circuits.

b) Any electrical main and auxiliary steering gear control system operable from the navigation bridge is to be served by its own separate circuit supplied from a steering gear power circuit from a point within the steering gear compartment, or directly from switchboard busbars supplying that steering gear power circuit at a point on the switchboard adjacent to the supply to the steering gear power circuit. The power supply systems are to be protected selectively.

c) The remote control of the power unit and the steering gear control systems is to be supplied also by the alternative power source when required by [2.7.2], item e).

2.7.5 Circuit protection

a) Short-circuit protection is to be provided for each control circuit and each power circuit of electric or electrohydraulic main and auxiliary steering gear.

b) No protection other than short-circuit protection is to be provided for steering gear control system supply circuits.

c) Protection against excess current (e.g. by thermal relays), including starting current, if provided for power circuits, is to be for not less than twice the full load current of the motor or circuit so protected, and is to be arranged to permit the passage of the appropriate starting currents.

d) Steering gear motor circuits obtaining their power supply via an electronic converter, e.g. for speed control, and which are limited to full load current are exempt from the requirement to provide protection against excess current, including starting current, of not less than twice the full load current of the motor. The required overload alarm is to be set to a value not greater than the normal load of the electronic converter.

Note 1: "Normal load" is the load in normal mode of operation that approximates as close as possible to the most severe conditions of normal use in accordance with the manufacturer's operating instructions.

e) Where fuses are fitted, their current ratings are to be two step higher than the rated current of the motors. However, in the case of intermittent service motors, the fuse rating is not to exceed 160% of the rated motor current.

f) The instantaneous short-circuit trip of circuit breakers is to be set to a value not greater than 15 times the rated current of the drive motor.

g) The protection of control circuits is to correspond to at least twice the maximum rated current of the circuit, though not, if possible, below 6 A.

2.7.6 Starting and stopping of motors for steering gear power units

a) Motors for power units are to be capable of being started and stopped from a position on the navigation bridge and from a point within the steering gear compartment.

b) Means are to be provided at the position of motor starters for isolating any remote control starting and stopping devices (e.g. by removal of the fuse-links or switching off the automatic circuit breakers).

c) Main and auxiliary steering gear power units are to be arranged to restart automatically when power is restored after a power failure.

2.7.7 Installation

a) Duplicated electric power circuits are to be separated as far as practicable.

b) Cables for duplicated electric power circuits with their associated components are to be separated as far as practicable. They are to follow different routes separated both vertically and horizontally, as far as practicable, throughout their entire length.

c) Actuators controlling the power systems of the steering gear, e.g. magnetic valves, are to be duplicated and separated.

2.8 Alarms and indications

2.8.1 Power units

a) In the event of a power failure to any one of the steering gear power units, an audible and visual alarm shall be given on the navigation bridge.

b) Means for indicating that the motors of electric and electrohydraulic steering gear are running shall be installed on the navigation bridge and at a suitable main machinery control position.

c) Where a three-phase supply is used, an alarm shall be provided that will indicate failure of any one of the supply phases.

d) An overload alarm shall be provided for each motor of electric or electrohydraulic steering gear power units.

e) The alarms required in c) and d) *shall be both audible and visual and situated in a conspicuous position in the main machinery space or control room from which the main machinery is normally controlled.*

2.8.2 Hydraulic system

a) Hydraulic oil reservoirs are to be provided with the alarms required in [2.6.6].

b) Where hydraulic locking, caused by a single failure, may lead to loss of steering, an audible and visual alarm, which identifies the failed system, is to be provided on the navigation bridge.

Note 1: This alarm is to be activated when, for example:

- the position of the variable displacement pump control system does not correspond with the given order, or
- an incorrect position in the 3-way valve, or similar, in the constant delivery pump system is detected.

2.8.3 Control system

In the event of a failure of electrical power supply to the steering gear control systems, an audible an visual alarm shall be given on the navigation bridge.

2.8.4 Rudder angle indication

The angular position of the rudder is to be:

a) indicated on the navigation bridge, if the main steering gear is power operated. The rudder angle indication is to be independent of the steering gear control system and be supplied through the emergency switchboard, or by an alternative and independent source of electrical power such as that referred to in [2.7.2], item e);

b) recognisable in the steering gear compartment.

2.8.5 Steering gear failure

The steering gear failures likely to cause uncontrolled movements of rudder are to be clearly identified. In the event of detection of such failure, the rudder is to stop in the current position without manual intervention or, subject to the discretion of the Society, is to return to the midship/neutral position. For mechanical failures such as sticking valves and failure of static components (pipes, cylinders), the system response without manual intervention is not mandatory, and the operator can follow instructions on the signboard in case of such failures, in accordance with [5.5.1].

Additionally for hydraulic locking failure, refer also to [2.8.2] item b).

2.8.6 Summary table

Displays and alarms are to be provided in the locations indicated in Tab 5.

Table 5 : Location of displays and alarms

Item		Display	Alarms (audible and visible)	Location		
				Navigation Bridge	Engine Control Room **(3)**	Steering gear compartment
Indication that electric motor of each power unit is running		X		X	X	
Rudder angle indicator		X		X		X
Power failure of each power unit			X	X	X	
Power failure of each control system			X	X	X	
Overload of electric motor of each power unit			X	X	X	
Phase failure of electric motor of each power unit			X	X	X	
Earth fault on AC and DC circuits			X	X	X	
Control system failures	Loop failures in closed loop systems, both command and feed back loops **(1)**		X	X	X	
	Data communication errors		X	X	X	
	Programmable system failures (Hardware and software failures)		X	X	X	
	Deviation between rudder order and feedback **(2)**		X	X	X	
Low level of each hydraulic fluid reservoir			X	X	X	
Hydraulic lock			X	X		

(1) Normally short circuit, broken connections and earth faults

(2) Deviation alarm is to be initiated if the rudder's actual position does not reach the set point within acceptable time limits for the closed loop control systems (e.g. follow-up control and autopilot). Deviation alarm may be caused by mechanical, hydraulic or electrical failures.

(3) Common alarm may be accepted if individual alarms are available locally.

3 Design and construction - Requirements for ships equipped with several rudders

3.1 Principle

3.1.1 General

In addition to the provisions of Article [2], ships equipped with two or more aft rudders are to comply with the provisions of the present Article.

3.1.2 Availability

Where the ship is fitted with two or more rudders, each having its own actuation system, the latter need not be duplicated.

3.1.3 Equivalent rudder stock diameter

Where the rudders are served by a common actuating system, the diameter of the rudder stock referred to in [2.2.1], item c), is to be replaced by the equivalent diameter d obtained from the following formula:

$$d = \sqrt[3]{\sum_i d_j^3}$$

with:

d_j : Rule diameter of the upper part of the rudder stock of each rudder in way of the tiller, excluding strengthening for navigation in ice.

3.2 Synchronisation

3.2.1 General

A system for synchronising the movement of the rudders is to be fitted, either:

- by a mechanical coupling, or
- by other systems giving automatic synchronising adjustment.

3.2.2 Non-mechanical synchronisation

Where the synchronisation of the rudder motion is not achieved by a mechanical coupling, the following provisions are to be met:

a) the angular position of each rudder is to be indicated on the navigation bridge

b) the rudder angle indicators are to be independent from each other and, in particular, from the synchronising system

c) in case of failure of the synchronising system, means are to be provided for disconnecting this system so that steering capability can be maintained or rapidly regained. See also Pt D, Ch 7, Sec 4, [7.2.2].

4 Design and construction - Requirements for ships equipped with thrusters as steering means

4.1 Principle

4.1.1 General

The main and auxiliary steering gear referred to in Article [3] may consist of thrusters of the following types:

- azimuth thrusters
- water-jets
- cycloidal propellers

complying with the provisions of Ch 1, Sec 15, as far as applicable.

4.1.2 Control system

Where the steering means of the ship consists of two or more thrusters, their control system is to include a device ensuring an automatic synchronisation of the thruster rotation, unless each thruster is so designed as to withstand any additional forces resulting from the thrust exerted by the other thrusters.

4.2 Steering arrangements

4.2.1 General

The requirements in this sub-article apply to ships fitted with alternative propulsion and steering arrangements, such as but not limited to, azimuthing propulsors or water jet propulsion systems.

4.2.2 Steering arrangements for ships fitted with multiple steering-propulsion units

For a ship fitted with multiple steering-propulsion units, such as, but not limited to, azimuthing propulsors or water jet propulsion systems, each of the steering-propulsion units is to be provided with a main steering gear and an auxiliary steering gear or with two or more identical steering actuating systems in compliance with [4.2.7]. The main steering gear and the auxiliary steering gear are to be so arranged that the failure of one of them will not render the other one inoperative.

4.2.3 Steering arrangements for ships fitted with single steering-propulsion unit

For a ship fitted with a single steering-propulsion unit, the steering gear is to be provided with two or more steering actuating systems complying with [4.2.7]. A detailed risk assessment is to be submitted in order to demonstrate that in the case of any single failure in the steering gear, control system and power supply, the ship steering is maintained.

4.2.4 Design of components used in steering arrangements

All components used in steering arrangements for ship directional control are to be of sound reliable construction to the satisfaction of the Administration or recognized organizations acting on its behalf. Special consideration should be given to the suitability of any essential component which is not duplicated. Any such essential component is, where appropriate, to utilize anti-friction bearings such as ball bearings, roller bearings or sleeve bearings which should be permanently lubricated or provided with lubrication fittings.

4.2.5 Main steering arrangements

The main steering arrangements for ship directional control are to be:

- of adequate strength and capable of steering the ship at maximum ahead service speed which should be demonstrated
- capable of changing direction of the steering-propulsion unit from one side to the other at declared steering angle limits at an average turning speed of not less than 2,3°/s with the ship running ahead at maximum ahead service speed
- for all ships, operated by power; and
- so designed that they will not be damaged at maximum astern speed; this design requirement need not be proved by trials at maximum astern speed and declared steering angle limits.

Note 1: Declared steering angle limits are the operational limits in terms of maximum steering angle, or equivalent, according to manufacturers' guidelines for safe operation, also taking into account the ship's speed or propeller torque/speed or other limitation; the “declared steering angle limits” are to be declared by the directional control system manufacturer for each ship specific non-traditional steering mean.

Note 2: Ship manoeuvrability tests, such as those in the Standards for ship manoeuvrability (IMO Resolution MSC.137(76)) should be carried out with steering angles not exceeding the declared steering angle limits.

4.2.6 Auxiliary steering arrangements

The auxiliary steering arrangements for ship directional control are to be:

- of adequate strength and capable of steering the ship at navigable speed and of being brought speedily into action in an emergency
- capable of changing direction of the ship's directional control system from one side to the other at declared steering angle limits at an average turning speed, of not less than 0.5°/s; with the ship running ahead at one half of the maximum ahead service speed or 7 knots, whichever is the greater; and
- for all ships, operated by power where necessary to meet the requirements of SOLAS regulation II-1/29.4.2 and in any ship having power of more than 2,500 kW propulsion power per steering-propulsion unit.

Note 1: The definition of “declared steering angle limits”, set out in [4.2.5], applies.

Note 2: Ship manoeuvrability tests, such as those in the Standards for ship manoeuvrability (IMO Resolution MSC.137(76)) should be carried out with steering angles not exceeding the declared steering angle limits.

4.2.7 Omission of the auxiliary steering gear

a) For a ship fitted with a single steering-propulsion unit where the main steering gear comprises two or more identical power units and two or more identical steering actuators, an auxiliary steering gear need not be fitted provided that the steering gear:
   - in a passenger ship, is capable of satisfying the requirements in [4.2.5] while any one of the power units is out of operation
   - in a cargo ship, is capable of satisfying the requirements in [4.2.5]while operating with all power units; and
   - is arranged so that after a single failure in its piping system or in one of the power units, steering capability can be maintained or speedily regained.

b) For a ship fitted with multiple steering-propulsion units, where each main steering system comprises two or more identical steering actuating systems, an auxiliary steering gear need not be fitted provided that each steering gear:
   - in a passenger ship, is capable of satisfying the requirements in [4.2.5] while any one of the steering gear steering actuating systems is out of operation
   - in a cargo ship, is capable of satisfying the requirements in [4.2.5] while operating with all steering gear steering actuating systems
   - is arranged so that after a single failure in its piping or in one of the steering actuating systems, steering capability can be maintained or speedily regained; and
   - the above capacity requirements apply regardless whether the steering systems are arranged with common or dedicated power units.

Note 1: For the purposes of alternative steering arrangements, the steering gear power unit should be considered as defined in [1.3.4]. For electric steering gears, refer to [1.3.4]; electric steering motors should be considered as part of the power unit and actuator.

4.2.8 Case of the steering-propulsion units having a residual steering capability when propulsion power is lost

This requirement applies to steering-propulsion units having a certain proven steering capability due to ship speed also in case propulsion power has failed.

Where the propulsion power exceeds 2,500 kW per thruster unit, an alternative power supply, sufficient at least to supply the steering arrangements which complies with the requirements of [2.2.2], item b), and also its associated control system and the steering gear response indicator, is to be provided automatically, within 45 s, either from the emergency source of electrical power or from an independent source of power located in the steering gear compartment. This independent source of power is to be used only for this purpose. In every ship of 10,000 gross tonnage and upwards, the alternative power supply is to have a capacity for at least 30 min of continuous operation and in any other ship for at least 10 min.

4.2.9 Additional requirement for ships fitted with multiple electric or electrohydraulic steering systems

For a ship fitted with multiple electric or electrohydraulic steering systems, the requirements of [2.7.2], items a), b) and c), are to be applied to each of the steering systems.

4.3 Use of water-jets

4.3.1 The use of water-jets as steering means will be given special consideration by the Society.

5 Arrangement and installation

5.1 Steering gear room arrangement

5.1.1 *The steering gear compartment shall be:*

a) readily accessible and, as far as practicable, separated from machinery spaces, and

b) provided with suitable arrangements to ensure working access to steering gear machinery and controls. These arrangements shall include handrails and gratings or other non-slip surfaces to ensure suitable working conditions in the event of hydraulic fluid leakage.

5.2 Rudder actuator installation

5.2.1

a) Rudder actuators are to be installed on foundations of strong construction so designed as to allow the transmission to the ship structure of the forces resulting from the torque applied by the rudder and/or by the actuator, considering the strength criteria defined in [2.5.3] and [5.3.1]. The structure of the ship in way of the foundations is to be suitably strengthened.

b) Where the rudder actuators are bolted to the hull, the grade of the bolts used is not to be less than 8.8. Unless the bolts are adjusted and fitted with a controlled tightening, strong shocks are to be fitted in order to prevent any lateral displacement of the rudder actuator.

5.3 Overload protections

5.3.1 Mechanical rudder stops

a) The steering gear is to be provided with strong rudder stops capable of mechanically stopping the rotation of the rudder at an angle slightly greater than its maximum working angle. Alternatively, these stops may be fitted on the ship to act on another point of the mechanical transmission system between the rudder actuator and the rudder blade. These stops may be built in with the actuator design.

b) The scantlings of the rudder stops and of the components transmitting to the ship's structure the forces applied on these stops are to be determined for the greater value of the torques T_R or T_G.

   Where $T_G \geq 1{,}5T_R$, the rudder stops are to be fitted between the rudder actuator and the rudder stock, unless the rudder stock as well as all the components transmitting mechanical forces between the rudder actuator and the rudder blade are suitably strengthened.

5.3.2 Rudder angle limiters

a) Power-operated steering gear is to be provided with positive arrangements, such as limit switches, for stopping the gear before the rudder stops are reached. These arrangements are to be synchronised with the gear itself and not with the steering gear control.

b) For power-operated steering gears and where the rudder may be oriented to more than 35° at very reduced speed, it is recommended to fit a limit system 35° for full speed. A notice is to be displayed at all steering wheel stations indicating that rudder angles of more than 35° are to be used only at very reduced speed.

5.3.3 Relief valves

Relief valves are to be fitted in accordance with [2.6.5].

5.3.4 Buffers

Buffers are to be provided on all ships fitted with mechanical steering gear. They may be omitted on hydraulic gear equipped with relief valves or with calibrated bypasses.

5.4 Means of communication

5.4.1 *A means of communication is to be provided between the navigation bridge and the steering gear compartment.*

If electrical, it is to be fed through the emergency switchboard or to be sound powered.

5.5 Operating instructions

5.5.1 For steering gear comprising two identical power units intended for simultaneous operation, both normally provided with their own (partly or mutually) separate control systems, the following standard notice is either to be placed on a signboard fitted at a suitable place on the steering control post on the bridge or incorporated into the operation manual:

CAUTION

IN SOME CIRCUMSTANCES WHEN 2 POWER UNITS ARE RUNNING SIMULTANEOUSLY, THE RUDDER MAY NOT RESPOND TO THE HELM. IF THIS HAPPENS STOP EACH PUMP IN TURN UNTIL CONTROL IS REGAINED.

6 Certification, inspection and testing

6.1 Type tests of hydraulic pumps

6.1.1 Each type of power unit pump is to be subjected in the workshop to a type test of not less than 100 hours' duration.

The test arrangements are to be such that the pump may run both:

- in idling conditions, and
- at maximum delivery capacity at maximum working pressure.

During the test, idling periods are to be alternated with periods at maximum delivery capacity at maximum working pressure. The passage from one condition to another is to occur at least as quickly as on board.

During the test, no abnormal heating, excessive vibration or other irregularities are permitted.

After the test, the pump is to be disassembled and inspected.

Note 1: Type tests may be waived for a power unit which has been proven to be reliable in marine service.

6.2 Testing of materials

6.2.1 Components subject to pressure or transmitting mechanical forces

a) Materials of components subject to pressure or transmitting mechanical forces, specifically:
   - cylindrical shells of hydraulic cylinders, rams and piston rods
   - tillers, quadrants
   - rotors and rotor housings for rotary vane steering gear
   - hydraulic pump casings
   - and hydraulic accumulators, if any,

   are to be duly tested, including examination for internal defects, in accordance with the requirements of NR216 Materials and Welding.

b) A works' certificate may be accepted for low stressed parts, provided that all characteristics for which verification is required are guaranteed by such certificate.

6.2.2 Hydraulic piping, valves and accessories

Tests for materials of hydraulic piping, valves and accessories are to comply with the provisions of Ch 1, Sec 10, [20.4].

6.3 Inspection and tests during manufacturing

6.3.1 Components subject to pressure or transmitting mechanical forces

a) The mechanical components referred to in [6.2.1] are to be subjected to appropriate non-destructive tests. For hydraulic cylinder shells, pump casings and accumulators, refer to Ch 1, Sec 3.

b) Defects may be repaired by welding only on forged parts or steel castings of weldable quality. Such repairs are to be conducted under the supervision of the Surveyor in accordance with the applicable requirements of NR216 Materials and Welding.

6.3.2 Hydraulic piping, valves and accessories

Hydraulic piping, valves and accessories are to be inspected and tested during manufacturing in accordance with Ch 1, Sec 10, [20], for a class I piping system.

6.4 Inspection and tests after completion

6.4.1 Hydrostatic tests

a) Hydraulic cylinder shells and accumulators are to be subjected to hydrostatic tests according to the relevant provisions of Ch 1, Sec 3.

b) Hydraulic piping, valves and accessories and hydraulic pumps are to be subjected to hydrostatic tests according to the relevant provisions of Ch 1, Sec 10, [20.5].

6.4.2 Shipboard tests

After installation on board the ship, the steering gear is to be subjected to the tests detailed in Ch 1, Sec 18, [3.13].

6.4.3 Sea trials

For the requirements of sea trials, refer to Ch 1, Sec 18.

Section 15 Thrusters

1 General

1.1 Application

1.1.1 Thrusters developing power equal to 110 kW or more

The requirements of this Section apply to the following types of thrusters developing power equal to 110 kW or more:

- transverse thrusters intended for manoeuvring
- thrusters intended for propulsion and steering.

For azimuth thrusters intended for dynamic positioning, the additional requirements in Pt F, Ch 11, Sec 5 are to be complied with.

Thrusters intended for propulsion and steering of ships with an **ICE CLASS** notation are to comply with the additional requirements of Part F, Chapter 8. Transverse thrusters intended for manoeuvring of ships with an **ICE CLASS** notation are required to comply with additional requirement Pt F, Ch 8, Sec 3, [3.5.1] only. Thrusters intended for propulsion and steering of ships with an additional class notation **POLAR CLASS** or a service notation **icebreaker** are to comply with the relevant requirements of NR527.

1.1.2 Thrusters developing power less than 110 kW

Thrusters of less than 110 kW are to be built in accordance with sound marine practice and tested as required in [3.2] to the satisfaction of the Surveyor.

1.2 Definitions

1.2.1 Thruster

A thruster is a propeller installed in a revolving nozzle or in a special transverse tunnel in the ship, or a water-jet. A thruster may be intended for propulsion, manoeuvring and steering or any combination thereof. Propulsion propellers in fixed nozzles are not considered thrusters (see Ch 1, Sec 8, [1.1.1]).

1.2.2 Transverse thruster

A transverse thruster is an athwartship thruster developing a thrust in a transverse direction for manoeuvring purposes.

1.2.3 Azimuth thruster

An azimuth thruster is a thruster which has the capability to rotate through 360° in order to develop thrust in any direction.

1.2.4 Water-jet

A water-jet is equipment constituted by a tubular casing (or duct) enclosing an impeller. The shape of the casing is such as to enable the impeller to produce a water-jet of such intensity as to give a positive thrust. Water-jets may have means for deviating the jet of water in order to provide a steering function.

1.3 Thrusters intended for propulsion

1.3.1 In general, at least two azimuth thrusters are to be fitted in ships where these are the sole means of propulsion. Single azimuth thruster installations will be specially considered by the Society on a case by case basis.

This requirement also applies to water-jets.

1.4 Documentation to be submitted

1.4.1 Plans to be submitted for athwartship thrusters and azimuth thrusters

For thrusters developing power equal to 110 kW or more, the plans listed in Tab 1 are to be submitted.

1.4.2 Plans to be submitted for water-jets

The plans listed in Tab 2 are to be submitted.

1.4.3 Additional data to be submitted

The data and documents listed in Tab 3 are to be submitted by the manufacturer together with the plans.

Table 1 : Plans to be submitted for athwartship thrusters and azimuth thrusters

No.	A/I (1)	ITEM
General requirements for all thrusters		
1	I	General arrangement of the thruster
2	A	Propeller, including the applicable details mentioned in Ch 1, Sec 8
3	A	Bearing details
4	A	Propeller and intermediate shafts
5	A	Gears, including the applicable details mentioned in Ch 1, Sec 6
Specific requirements for transverse thrusters		
6	A	Structure of the tunnel showing the materials and their thickness
7	A	Structural equipment or other connecting devices which transmit the thrust from the propeller to the tunnel
8	A	Sealing devices (propeller shaft gland and thruster-tunnel connection)
9	A	For the adjustable pitch propellers: pitch control device and corresponding monitoring system
Specific requirements for rotating and azimuth thrusters		
10	A	Structural items (nozzle, bracing, etc.)
11	A	Structural connection to hull
12	A	Rotating mechanism of the thruster
13	A	Thruster control system
14	A	Piping systems connected to thruster
(1) A = to be submitted for approval I = to be submitted for information		

Table 2 : Plans to be submitted for water-jets

No.	A/I (1)	ITEM
1	I	General arrangement of the water-jet
2	A	Casing (duct) (location and shape) showing the materials and the thicknesses as well as the forces acting on the hull
3	A	Details of the shafts, flanges, keys
4	I	Sealing gland
5	A	Bearings
6	A	Impeller
7	A	Steering and reversing buckets and their control devices as well as the corresponding hydraulic diagrams
(1) A = to be submitted for approval I = to be submitted for information		

Table 3 : Data and documents to be submitted for athwartship thrusters, azimuth thrusters and water-jets

No.	A/I (1)	ITEM
1	I	Rated power and revolutions
2	I	Rated thrust
3	A	Material specifications of the major parts, including their physical, chemical and mechanical properties
4	A	Where parts of thrusters are of welded construction, all particulars on the design of welded joints, welding procedures, heat treatments and non-destructive examinations after welding
5	I	Where applicable, background information on previous operating experience in similar applications
(1) A = to be submitted for approval I = to be submitted for information		

2 Design and Construction

2.1 Materials

2.1.1 Propellers

For requirements relative to material intended for propellers, see Ch 1, Sec 8, [2.1.1].

2.1.2 Other thruster components

For the requirements relative to materials intended for other parts of the thrusters, such as gears, shaft, couplings, etc., refer to the applicable parts of the Rules.

2.2 Transverse thrusters and azimuth thrusters

2.2.1 Prime movers

a) Diesel engines intended for driving thrusters are to comply with the applicable requirements of Ch 1, Sec 2.

b) Electric motors intended for driving thrusters and their feeding systems are to comply with the requirements of Ch 2, Sec 4. In particular:
   - provisions are to be made to prevent starting of the motors whenever there are insufficient generators in operation
   - intermittent duty thrusters will be the subject of special consideration by the Society.

2.2.2 Propellers

a) For propellers of thrusters intended for propulsion, the requirements of Ch 1, Sec 8, [2.5] apply.

b) For propellers of thrusters intended for manoeuvring only, the requirements of Ch 1, Sec 8, [2.5] also apply, although the increase in thickness of 10% does not need to be applied.

2.2.3 Shafts

a) For propeller shafts of thrusters intended for propulsion, the requirements of Ch 1, Sec 7, [2.2.3] apply.

b) For propellers of thrusters intended for manoeuvring only, the minimum diameter d_S of the shaft, in mm, is not to be less than the value obtained by the following formula:

$$d_S = [(C \cdot M_T)^2 + (D \cdot M)^2]^{1/6} \cdot \left(\frac{1}{1 - Q^4}\right)^{1/3}$$

where:

M_T : Maximum transmitted torque, in N·m; where not indicated, M_T may be assumed as 9550 (P/N)

where:

P : Maximum power of the thruster prime mover, in kW

N : Rotational speed of the propeller, in rev/min

M : Bending moment, in N·m, at the shaft section under consideration

C : Coefficient equal to:

$$C = 10{,}2 + \frac{28000}{R_{S,MIN}}$$

D : Coefficient equal to:

$$D = \frac{170000}{412 + R_{S,MIN}}$$

$R_{S,MIN}$: Minimum yield strength of the shaft material, in N/mm²

Q : 0 for solid shafts

The ratio between the diameter of the hole and the external diameter of the shaft, in the case of hollow shafts. If $Q \le 0{,}3$, Q may be assumed equal to 0.

The above diameter is to be increased by 10% in the case of keyed connection to the propeller in way of key.

2.2.4 Gears

a) Gears of thrusters intended for propulsion are to be in accordance with the applicable requirements of Ch 1, Sec 6, applying the safety factors for propulsion gears.

b) Gears of thrusters intended for manoeuvring only are to be in accordance with the applicable requirements of Ch 1, Sec 6, applying the safety factors for auxiliary gears.

2.2.5 Nozzles and connections to hull for azimuth thrusters

a) For the requirements relative to the nozzle structure, see Part B, Chapter 12.

b) The scantlings of the nozzle connection to the hull and the welding type and size will be specially considered by the Society, which reserves the right to require detailed stress analysis in the case of certain high power installations.

c) For steerable thrusters, the equivalent rudder stock diameter is to be calculated in accordance with the requirements of Part B, Chapter 12.

2.2.6 Transverse thruster tunnel

a) The thickness of the tunnel is not to be less than the adjacent part of the hull.

b) Special consideration will be given by the Society to tunnels connected to the hull by connecting devices other than welding.

2.3 Water-jets

2.3.1 Shafts

The diameter of the shaft supporting the impeller is not to be less than the diameter d_2, in mm, obtained by the following formula:

$$d_2 = 100fh \cdot \left(\frac{P}{N}\right)^{1/3} \cdot \left(\frac{1}{1-Q^4}\right)^{1/3}$$

where:

P : Power, in kW

N: : Rotational speed, in rpm

f : Calculated as follows:

$$f = \left(\frac{560}{R_m + 160}\right)^{1/3}$$

where R_m is the ultimate tensile strength of the shaft material, in N/mm²

h: :
- h = 1 when the shaft is only transmitting torque loads, and when the weight and thrust of the propeller are totally supported by devices located in the fixed part of the thruster
- h = 1,22 where the impeller is fitted with key or shrink-fitted.

Q : 0 for solid shafts

The ratio between the diameter of the hole and the external diameter of the shaft, in the case of hollow shafts. If Q ≤ 0,3, Q may be assumed equal to 0.

The shafts are to be protected against corrosion by means of either a continuous liner or an oil-gland of an approved type, or by the nature of the material of the shaft.

2.3.2 Guide vanes, shaft support

a) Guide vanes and shaft supports, if any, are to be fitted in accordance with direction of flow. Trailing and leading edges are to be fitted with rounded profiles.

b) Fillet radius are generally not be less than the maximum local thickness of concerned element.Fatigue strength calculation is to be submitted.

2.3.3 Stator and impellers

a) Design is to take into account the loads developed in free going conditions and also in peculiar manoeuvres like crash stop.

b) Tip clearance is to take into account vibratory behaviours, displacements and any other expansion mode in all operating conditions of the water jet.

c) Fillet radii are generally not to be less than the maximum local thickness of concerned element.

d) There is to be no natural frequency of stator blades or rotor blades in the vicinity of the excitation frequencies due to hydrodynamic interaction between stator blades and rotor blades. Calculations are to be submitted for maximum speed and any currently used speed.

2.3.4 Nozzle and reversing devices

Design of nozzle and reversing devices are to take into account the loads developed in all operating conditions of the water jet, including transient loads.

2.3.5 Steering performance

Steering performance and emergency steering availability are to be at least equivalent to the requirements in Ch 1, Sec 14, [4.2] and Ch 1, Sec 14, [4.3].

2.4 Alarm, monitoring and control systems

2.4.1 Steering thruster controls

a) Controls for steering are to be provided from the navigation bridge, the machinery control station and locally.

b) Means are to be provided to stop any running thruster at each of the control stations.

c) A thruster angle indicator is to be provided at each steering control station. The angle indicator is to be independent of the control system.

2.4.2 Alarm and monitoring equipment

Tab 4 summarises the minimum alarm and monitoring requirements for propulsion and steering thrusters. See also Ch 1, Sec 14, [4].

Table 4 : Azimuth thrusters

Symbol convention H = High, HH = High high, G = group alarm L = Low, LL = Low low, I = individual alarm X = function is required, R = remote	Monitoring		Automatic control				
			Thruster			Auxiliary	
Identification of system parameter	Alarm	Indication	Slow-down	Shut-down	Control	Stand by Start	Stop
Steering oil pressure	L						
Oil tank level	L						

3 Testing and certification

3.1 Material tests

3.1.1 Propulsion and steering thrusters

All materials intended for parts transmitting torque and for propeller/impeller blades are to be tested in accordance with the requirements of Ch 1, Sec 8, [4.1] in the presence of a Surveyor.

3.1.2 Transverse thrusters

Material testing for parts of athwartship thrusters does not need to be witnessed by a Surveyor, provided full test reports are made available to him.

3.2 Testing and inspection

3.2.1 Thrusters

Thrusters are to be inspected as per the applicable requirements in Ch 1, Sec 8, [4.2].

3.2.2 Prime movers

Prime movers are to be tested in accordance with the requirements applicable to the type of mover used.

3.3 Certification

3.3.1 Certification of thrusters

Thrusters are to be individually tested and certified by the Society.

3.3.2 Mass produced thrusters

Mass produced thrusters of a type as mentioned in [1.1] may be accepted within the framework of the type approval program of the Society.

Section 16 Refrigerating Installations

1 General

1.1 Application

1.1.1 Refrigerating installations on all ships

The minimum safety requirements addressed in this Section are to be complied with for any refrigerating plant installed on board a ship to be classed by the Society. These requirements do not cover any operation or availability aspect of the plants, which are not the subject of class requirements, unless an additional notation is requested.

1.1.2 Additional notations

Where one or more of the following additional notations:

- **REF-CARGO**
- **REF-CONT**
- **REF-STORE**

is requested, the requirements of Part F, Chapter 7 are to be complied with, as applicable.

2 Minimum design requirements

2.1 Refrigerating installation components

2.1.1 General

In general, the specific requirements stated in Part C of the Rules for various machinery and equipment are also applicable to refrigerating installation components.

2.1.2 Pressure vessels and heat exchangers

a) Pressure vessels of refrigerating plants are to comply with the relevant requirements of Ch 1, Sec 3.

b) Vessels intended to contain ammonia or toxic substances are to be considered as class 1 pressure vessels as indicated in Ch 1, Sec 3, [1.4].

c) The materials used for pressure vessels are to be appropriate to the fluid that they contain. Where ammonia is the refrigerant, copper, bronze, brass and other copper alloys are not to be used.

d) Notch toughness of steels used in low temperature plants is to be suitable for the thickness and the lowest design temperature. A check of the notch toughness properties may be required where the working temperature is below minus 40°C.

2.1.3 Piping systems

a) Refrigerant pipes are generally to be regarded as pressure pipes.

b) Refrigerant, brine and sea water pipes are to satisfy the requirements of Ch 1, Sec 10 as applicable.

c) Refrigerant pipes are to be considered as belonging to the following classes:
   - class I: where they are intended for ammonia or toxic substances
   - class II: for other refrigerants
   - class III: for brine.

d) In general, the pipes conveying the cooling medium are not to come into direct contact with the ship's structure; they are to be carefully insulated on their run outside the refrigerated spaces, and more particularly when passing through bulkheads and decks.

e) The materials used for the pipes are to be appropriate to the fluids that they convey. Copper, brass, bronze and other copper alloys are not to be used for pipes likely to convey ammonia. Methods proposed for joining such pipes are to be submitted to the Society for consideration.

f) Notch toughness of the steels used is to be suitable for the application concerned.

g) Where necessary, cooling medium pipes within refrigerated spaces or embedded in insulation are to be externally protected against corrosion; for steel pipes, this protection is to be ensured by galvanisation or equivalent. All useful precautions are to be taken to protect the joints of such pipes against corrosion.

h) The use of plastic pipes will be considered by the Society on a case by case basis.

2.2 Refrigerants

2.2.1 Prohibited refrigerants

The use of the following refrigerants is not allowed for shipboard installations:

- Chlorofluorocarbons (CFC)
- Hydrochlorofluorocarbons (HCFC)
- Hydrofluoroarbons (HFC)
- Perfluorocarbons (PFC)
- Chloromethane (R-40)
- Ethane (R-170)
- Ethylene (R-1150)
- Other substances with lower explosion limit in air of less than 3,5%.

2.2.2 Allowed refrigerants

The refrigerants listed in this requirement are allowed (non exhaustive list):

- R-32/1234yf/744 Mixture (R-455)
- 1,3,3,3-Tetrafluoropropene (R-1234ze)
- 2,3,3,3-Tetrafluoropropene (R-1234yf)
- Ammonia (R-717) following requirements of [2.3]
- CO2 (R-744).

2.2.3 Statutory requirements

Particular attention is to be paid to any limitation on the use of refrigerants imposed by the Administration of the State whose flag the ship is flying.

2.2.4 Toxic or flammable refrigerants

The arrangement of refrigerating machinery spaces of plants using toxic or flammable refrigerants will be the subject of special consideration by the Society.

For specific requirements on spaces intended for plants using ammonia as a refrigerant, see [2.3].

2.3 Special requirements for ammonia (R717)

2.3.1 Refrigerating machinery compartment

a) Ammonia refrigerating machinery is to be installed in dedicated gastight spaces, complying with items b) to e).

   Ammonia plants with a quantity of ammonia not greater than 25 kg are however allowed to be located in the engine room, provided that the requirements of [2.3.2] are fulfilled.

Note 1: For fishing vessels, refer to Pt D, Ch 15, Sec 4, [21.3].

b) At least two access doors are to be provided. One of these doors is to lead directly to the open deck. The doors are to open outwards and are to be self-closing.

c) Dedicated spaces containing ammonia machinery (including process vessels) are to be fitted with:

   1) A negative ventilation system independent of ventilation systems serving other ship spaces and having a capacity not less than 30 air changes per hour based upon the total volume of the space. Other suitable arrangements which ensure an equivalent effectiveness may be considered. Provision is to be made for starting and stopping the ventilation fans from outside the space.

      Where the access to the ammonia machinery space is from an accommodation or machinery space, the ventilation of the ammonia machinery space may not be designed to keep it under negative pressure with respect to the adjacent space, provided that the access is through an airlock.

   2) A fixed ammonia detector system with audible and visual alarms inside and outside the space. This system is also to stop the compressor when a dangerous gas concentration is reached.

   3) Water screens above all access doors, operable manually from outside the space. Water for the water screens may be supplied from the fire pumps.

   4) an independent bilge system.

d) At least two sets of breathing apparatus and protective clothing are to be available outside and in the vicinity of the ammonia machinery space.

e) Ammonia piping is not to pass through accommodation spaces.

2.3.2 Ammonia plant located in the engine room

When installation of an ammonia plant is allowed in the engine room in accordance with the provision of [2.3.1] item a), the area where the ammonia machinery is installed is to be served by a hood with a negative pressure ventilation system, having a capacity of not less than 30 air changes per hour, independent from any other ship ventilation system, so as to prevent any leakage of ammonia from dissipating into other areas in the engine room.

A water-spray system is to be provided for the said area, covering the whole ammonia machinery and operable locally and from the outside of the engine room.

The provisions of items c) 2), d) and e) of requirement [2.3.1] are also to be complied with.

Section 17 Turbochargers

1 General

1.1 Application

1.1.1 These requirements are applicable for turbochargers with regard to design approval, type testing and certification and their matching on engines.

Turbochargers are to be type approved, either separately or as a part of an engine. The requirements are written for exhaust gas driven turbochargers, but apply in principle also for engine driven chargers.

1.1.2 The requirements escalate with the size of the turbochargers. The parameter for size is the engine power (at MCR) supplied by a group of cylinders served by the actual turbocharger (e.g. for a V-engine with one turbocharger for each bank the size is half of the total engine power).

1.1.3 Turbochargers are categorised in three groups depending on served power by cylinder groups with:

- Category A: ≤ 1000 kW
- Category B: > 1000 kW and ≤ 2500 kW
- Category C: > 2500 kW.

1.2 Documentation to be submitted

1.2.1 The documentation to be submitted is listed in:

- Tab 1 for category A turbochargers
- Tab 2 for category B and C turbochargers
- Tab 2 and Tab 3 for category C turbochargers.

Table 1 : Documentation to be submitted on request for Category A turbochargers

No.	I/A **(1)**	Document
1	A	Containment test report
2	A	Cross sectional drawing with principal dimensions and names of components
3	A	Test program
(1) A = to be submitted for approval; I = to be submitted for information		

Table 2 : Documentation to be submitted for Category B turbochargers

No.	I/A **(1)**	Document
1	I	Cross sectional drawing with principal dimensions and materials of housing components for containment evaluation
2	A	Documentation of containment in the event of disc fracture, see [2.2]
3	I	Operational data and limitation as: **(2)** • Maximum permissible operating speed (rpm) • Alarm level for over-speed • Maximum permissible exhaust gas temperature before turbine • Alarm level for exhaust gas temperature before turbine • Minimum lubrication oil inlet pressure • Lubrication oil inlet pressure low alarm set point • Maximum lubrication oil outlet temperature • Lubrication oil outlet temperature high alarm set point • Maximum permissible vibration levels, i.e. self- and externally generated vibration
4	A	Arrangement of lubrication system, all variants within a range.
5	I	Type test reports.
6	A	Test program.
(1) A = to be submitted for approval; I = to be submitted for information **(2)** Alarm levels may be equal to permissible limits but shall not be reached when operating the engine at 110% power or at any approved intermittent overload beyond the 110%.		

Table 3 : Additional documentation to be submitted for Category C turbochargers

No	I/A **(1)**	Document
1	A	Drawings of the housing and rotating parts including details of blade fixing
2	I	Material specifications (chemical composition and mechanical properties) of all parts mentioned above
3	A	Welding details and welding procedure of above mentioned parts, if applicable
4	A	Documentation **(2)** of safe torque transmission when the disc is connected to the shaft by an interference fit, see [2.3]
5	I	Information on expected lifespan, considering creep, low cycle fatigue and high cycle fatigue
6	I	Operation and maintenance manuals **(2)**

(1) A = to be submitted for approval; I = to be submitted for information
(2) Applicable to two sizes in a generic range of turbochargers.

2 Design and construction

2.1 General

2.1.1 The turbochargers are to be designed to operate under conditions given in Ch 1, Sec 1, Tab 1 and Ch 1, Sec 2, [1.3.3]. The component lifetime and the alarm level for speed are to be based on 45°C air inlet temperature.

2.1.2 The air inlet of turbochargers is to be fitted with a filter.

2.2 Containment

2.2.1 Turbochargers are to ensure containment in the event of a rotor burst. This means that, in case of a rotor burst, no part may penetrate the casing of the turbocharger or escape through the air intake. For documentation purposes (test/calculation), it is to be assumed that the discs disintegrate in the worst possible way.

2.2.2 For category B and C turbochargers, containment is to be documented by testing. A generic range of turbochargers may be deemed to ensure containment based on testing of one specific unit. Testing of a large unit is preferred as this is considered conservative for all smaller units in the generic range. In any case, it is to be documented (e.g. by calculation) that the selected test unit really is representative for the whole generic range.

Note 1: A generic range means a series of turbochargers which are of the same design, but scaled to each other.

2.2.3 The minimum test speeds, relative to the maximum permissible operating speed, are:

- For the compressor: 120%.
- For the turbine: 140% or the natural burst speed, whichever is lower.

2.2.4 Containment tests shall be performed at a temperature which is not lower than the maximum allowable temperature of the turbocharger to be specified by the manufacturer.

2.2.5 Manufacturers are to determine whether cases more critical than those defined in [2.2.3] and [2.2.4] exist with respect to containment safety. Where such a case is identified, evidence of containment safety is also to be provided for that case.

2.2.6 A numerical analysis simulation such as Finite Element Method (FEM) of sufficient containment integrity of the casing based on calculations by means of a simulation model may be accepted in lieu of the practical containment test, provided that:

- The numerical simulation model has been tested and its suitability/accuracy has been proven by direct comparison between calculation results and the practical containment test for a reference application (reference containment test). This test shall be performed at least once by the manufacturer for acceptance of the numerical simulation method in lieu of tests.
- The corresponding numerical simulation for the containment is performed for the same speeds as specified for the containment test.
- Material properties for high-speed deformations are to be applied in the numeric simulation. The correlation between normal properties and the properties at the pertinent deformation speed are to be substantiated.
- The design of the turbocharger regarding geometry and kinematics is to be similar to the turbocharger that was used for the reference containment test.

2.2.7 In cases where a totally new design is adopted for a turbocharger for which an application for type approval certification has been requested, new reference containment tests are to be performed.

Note 1: Totally new design means the principal differences between a new turbocharger and previous ones are related to geometry and kinematics. The turbochargers are to be regarded as having a totally new design if the structure and/or material of the turbocharger casings are changed, or any of, but not limited to, the following items is changed from the previous design:

- Maximum permissible exhaust gas temperature
- Number of bearings
- Number of turbine blades
- Number of turbine wheels and/or compressor wheels
- Direction of inlet air and/or exhaust gas (e.g., axial flow orientation, radial flow orientation)
- Type of the turbocharger drive (e.g., axial turbine type, radial turbine type, mixed flow turbine type).

2.3 Disc-shaft shrinkage fit

2.3.1 Where the disc of category C turbochargers is connected to the shaft with interference fit, calculations are to be performed to substantiate safe torque transmission during all relevant operating conditions such as maximum speed, maximum torque and maximum temperature gradient combined with minimum shrinkage amount.

2.4 Alarms and monitoring

2.4.1 For all turbochargers of Categories B and C, indications and alarms as listed in Tab 4 are required.

2.4.2 In addition to [2.4.1], the general requirements given in Part C, Chapter 3 apply.

Table 4 : Alarms and monitoring

No	Monitored Parameters	Category of turbochargers				Notes
		B		C		
		Alarm	Indication	Alarm	Indication	
1	Speed	High **(1)**	X **(1)**	High **(1)**	X **(1)**	
2	Exhaust gas at each turbocharger inlet, temperature	High **(2)**	X **(2)**	High	X	High temp. alarms for each cylinder at engine is acceptable **(3)**
3	Lub. oil at turbocharger outlet, temperature			High	X	If not forced system, oil temperature near bearings
4	Lub. oil at turbocharger inlet, pressure	Low	X	Low	X	Only for forced lubrication systems **(4)**

(1) On turbocharging systems where turbochargers are activated sequentially, speed monitoring is not required for the turbocharger(s) being activated last in the sequence, provided all turbochargers share the same intake air filter and they are not fitted with waste gates.

(2) For Category B turbochargers, the exhaust gas temperature may be alternatively monitored at the turbocharger outlet, provided that the alarm level is set to a safe level for the turbine and that correlation between inlet and outlet temperatures is substantiated.

(3) Alarm and indication of the exhaust gas temperature at turbocharger inlet may be waived if alarm and indication for individual exhaust gas temperature is provided for each cylinder and the alarm level is set to a value safe for the turbocharger.

(4) Separate sensors are to be provided if the lubrication oil system of the turbocharger is not integrated with the lubrication oil system of the diesel engine or if it is separated by a throttle or pressure reduction valve from the diesel engine lubrication oil system.

3 Certification, inspection and testing

3.1 Type tests

3.1.1 Category B or C turbochargers are to be type tested according to the present sub-article.

3.1.2 The type test for a generic range of turbochargers may be carried out either on an engine (for which the turbocharger is foreseen) or in a test rig.

3.1.3 Turbochargers for the low, medium, and high-speed engines are to be subjected to at least 500 load cycles at the limits of operation. This test may be waived if the turbocharger together with the engine is subjected to this kind of low cycle testing, see Ch 1, Sec 2, [4.1.4].

3.1.4 The suitability of the turbocharger for such kind of operation is to be preliminarily stated by the manufacturer.

3.1.5 The rotor vibration characteristics are to be measured and recorded in order to identify possible sub-synchronous vibrations and resonances.

3.1.6 The type test is to be completed by a hot running test at maximum permissible speed combined with maximum permissible temperature for at least one hour. After this test, the turbocharger is to be opened for examination, with focus on possible rubbing and the bearing conditions.

3.2 Workshop inspections and testing

3.2.1 Category B and C turbochargers inspections and testings as well as their associated certificates are to be done in accordance with Tab 5.

3.3 Certification

3.3.1 The manufacturer is to adhere to a certification scheme according to NR320 to ensure that the designer's specifications are met, and that manufacturing is in accordance with the approved drawings.

- For category C turbochargers, certification scheme for IBV product is to be selected. Each turbocharger is to be delivered with a Class certificate.
- For category B turbochargers, certification scheme for HBV product is to be selected. Each turbocharger is to be delivered with a works' certificate.
- For category A turbochargers, certification scheme for HBV product is to be selected. Each turbocharger is to be delivered with a works' certificate.

Table 5 : Inspections and testings

No	Inspections and testings	Type of certificate **(1)**	
		category B	category C
1	Chemical composition of material for the rotating parts.	W	W
2	Mechanical properties of the material of a representative specimen for the rotating parts and the casing	W	W
3	UT and crack detection of rotating parts	W	W
4	Dimensional inspection of rotating parts	W	W
5	Rotor balancing	W	C
6	Hydraulic testing of cooling spaces to 4 bars or 1.5 times maximum working pressure, whichever is higher	W	C
7	Overspeed test of all compressor wheels for a duration of 3 minutes at either 20% above alarm level speed at room temperature or 10% above alarm level speed at 45°C inlet temperature when tested in the actual housing with the corresponding pressure ratio. The overspeed test may be waived for forged wheels that are individually controlled by an approved non-destructive method	W	C
(1) C indicates that a Society certificate is required; W indicates that a manufacturer's document is required			

Section 18 Tests on Board

1 General

1.1 Application

1.1.1 This Section covers shipboard tests, both at the moorings and during sea trials. Such tests are additional to the workshop tests required in the other Sections of this Chapter.

For computerized machinery systems, requirements contained in Part C, Chapter 3 shall be referred to.

1.2 Purpose of shipboard tests

1.2.1 Shipboard tests are intended to demonstrate that the main and auxiliary machinery and associated systems are functioning properly, in respect of the criteria imposed by the Rules. The tests are to be witnessed by a Surveyor.

1.3 Documentation to be submitted

1.3.1 A comprehensive list of the shipboard tests intended to be carried out by the shipyard is to be submitted to the Society.

For each test, the following information is to be provided:

- scope of the test
- parameters to be recorded.

2 General requirements for shipboard tests

2.1 Trials at the moorings

2.1.1 Trials at the moorings are to demonstrate the following:

a) satisfactory operation of the machinery

b) quick and easy response to operational commands

c) protection of the various installations, as regards:
   - the protection of mechanical parts
   - the safeguards for personnel

d) accessibility for cleaning, inspection and maintenance.

Where the above features are not deemed satisfactory and require repairs or alterations, the Society reserves the right to require the repetition of the trials at the moorings, either wholly or in part, after such repairs or alterations have been carried out.

2.2 Sea trials

2.2.1 Scope of the tests

Sea trials are to be conducted after the trials at the moorings and are to include the following:

a) demonstration of the proper operation of the main and auxiliary machinery, including monitoring, alarm and safety systems, under realistic service conditions

b) check of the propulsion capability when one of the essential auxiliaries becomes inoperative

c) detection of dangerous vibrations by taking the necessary readings when required.

3 Shipboard tests for machinery

3.1 Conditions of sea trials

3.1.1 Displacement of the ship

Except in cases of practical impossibility, or in other cases to be considered individually, the sea trials are to be carried out at a displacement as close as possible to the deadweight (full load) or to one half of the deadweight (half load).

3.1.2 Power of the machinery

a) The power developed by the propulsion machinery in the course of the sea trials is to be as close as possible to the power for which classification has been requested. In general, this power is not to exceed the maximum continuous power at which the weakest component of the propulsion system can be operated. In cases of diesel engines and gas turbines, it is not to exceed the maximum continuous power for which the engine type concerned has been approved.

b) Where the rotational speed of the shafting is different from the design value, thereby increasing the stresses in excess of the maximum allowable limits, the power developed in the trials is to be suitably modified so as to confine the stresses within the design limits.

3.1.3 Determination of the power and rotational speed

a) The rotational speed of the shafting is to be recorded in the course of the sea trials, preferably by means of a continuous counter.

b) In general, the power is to be determined by means of torsiometric readings, to be effected with procedures and instruments deemed suitable by the Society.

As an alternative, for reciprocating internal combustion engines and gas turbines, the power may be determined by measuring the fuel consumption and on the basis of the other operating characteristics, in comparison with the results of bench tests of the prototype engine.

Other methods of determining the power may be considered by the Society on a case by case basis.

3.2 Starting from dead ship conditions

3.2.1 The capability of the machinery installations to be brought into operation from a dead ship condition without external aid is to be demonstrated.

3.2.2 The capability of the propulsion to be restored from dead ship conditions within 30 minutes is to be demonstrated.

3.3 Navigation and manoeuvring tests

3.3.1 Speed trials

a) Where required by the Rules (see Pt A, Ch 1, Sec 2, [4.16.2]), the speed of the ship is to be determined using procedures deemed suitable by the Society.

b) The ship speed is to be determined as the average of the speeds taken in not less than two pairs of runs in opposite directions.

3.3.2 Astern trials

a) The ability of the machinery to reverse the direction of thrust of the propeller in sufficient time, and so to bring the ship to rest within reasonable distance from maximum ahead service speed, shall be demonstrated and recorded.

b) The stopping times, ship headings and distances recorded on trials, together with the results of trials to determine the ability of ships having multiple propellers to navigate and manoeuvre with one or more propellers inoperative, shall be available on board for the use of the Master or designated personnel.

c) Where the ship is provided with supplementary means for manoeuvring or stopping, the effectiveness of such means shall be demonstrated and recorded as referred to in paragraphs a) and b).

d) For electric propulsion systems, see [3.9].

e) Main propulsion systems are to undergo tests to demonstrate the astern response characteristics.The tests are to be carried out at least over the manoeuvring range of the propulsion system and from all control positions. A test plan is to be provided by the yard and accepted by the surveyor. If specific operational characteristics have been defined by the manufacturer these shall be included in the test plan.

f) The reversing characteristics of the propulsion plant, including the blade pitch control system of controllable pitch propellers, are to be demonstrated and recorded during trials.

3.4 Tests of boilers

3.4.1 General

The satisfactory operation of the main and auxiliary boilers supplying essential services is to be ascertained in all operating conditions during the trials at the moorings and the sea trials.

3.4.2 Tests to be performed

After installation on board, the following tests are to be carried out in the presence of the Surveyor:

a) Test in the hot condition of boilers and superheaters

b) Accumulation tests and setting of safety valves of boilers and superheaters

- Safety valves are to be set to lift at a pressure not exceeding 103% of the design pressure
- For boilers fitted with superheaters, the safety valves of the latter are to be set to lift before or, at the latest, at the same time as the valves of the saturated steam chest

c) Verification that, at the maximum steaming rate, the boiler pressure does not exceed 110% of the design pressure when the stop valves of the boiler, except those which must remain open for the burning operation, are closed. The boiler is to be fed so that the water level remains normal throughout the test. The test is to last:
   - 15 minutes for fire tube boilers
   - 7 minutes for water tube boilers.

d) Test and simulation of all safety devices, alarms, shut-off and automatic starting of standby equipment.

3.4.3 Alternative requirement

a) When it is recognised, for certain types of boilers, that accumulation tests might endanger the superheaters, the omission of such tests may be considered.

b) Such omission can be permitted, however, only if the drawings and the size of safety valves have been reviewed by the Society, and provided that the safety valves are of a type whose relieving capacity has been established by a test carried out in the presence of the Surveyor, or in other conditions deemed equivalent to those of the actual boiler.

c) When the Society does not agree to proceed with an accumulation test, the valve manufacturer is to supply, for each safety valve, a certificate specifying its relieving capacity for the working conditions of the boiler. In addition, the boiler manufacturer is to supply a certificate specifying the maximum steam capacity of the boiler.

3.5 Tests of diesel engines

3.5.1 Objectives

The purpose of the shipboard testing is to verify compatibility with power transmission and driven machinery in the system, control systems and auxiliary systems necessary for the engine and integration of engine / shipboard control systems, as well as other items that had not been dealt with in the FAT (Factory Acceptance Testing).

3.5.2 Starting capacity

Starting manoeuvres are to be carried out in order to verify that the capacity of the starting media satisfies the required number of start attempts.

3.5.3 Monitoring and alarm system

The monitoring and alarm systems are to be checked to the full extent for all engines, except items already verified during the works trials.

3.5.4 Test loads

a) Test loads for various engine applications are given below. In addition, the scope of the trials may be expanded depending on the engine application, service experience, or other relevant reasons.

b) The suitability of the engine to operate on fuels intended for use is to be demonstrated.

c) Tests other than those listed below may be required by statutory instruments (e.g. EEDI verification).

d) Propulsion engines driving fixed pitch propeller or impeller.
   - At rated engine speed n_0: at least 4 hours.
   - At engine speed 1,032 n_0 (if engine adjustment permits): 30 min.
   - At approved intermittent overload (if applicable): testing for duration as agreed with the manufacturer.
   - Minimum engine speed to be determined.
   - The ability of reversible engines to be operated in reverse direction is to be demonstrated.

Note 1: During stopping tests according to IMO Resolution MSC.137 (76), see [3.5.5] for additional requirements in the case of a barred speed range.

e) Propulsion engines driving controllable pitch propellers.
   - At rated engine speed n0 with a propeller pitch leading to rated engine power (or to the maximum achievable power if 100% cannot be reached): at least 4 hours.
   - At approved intermittent overload (if applicable): testing for duration as agreed with the manufacturer.
   - With reverse pitch suitable for manoeuvring, see [3.5.5] for additional requirements in the case of a barred speed range.

f) Engine(s) driving generator(s) for electrical propulsion and/or main power supply
   - At 100% power (rated electrical power of generator): at least 60 min.
   - At 110% power (rated electrical power of generator): at least 10 min.

Note 2: Each engine is to be tested 100% electrical power for at least 60 min and 110% of rated electrical power of the generator for at least 10 min. This may, if possible, be done during the electrical propulsion plant test, which is required to be tested with 100% propulsion power (i.e. total electric motor capacity for propulsion) by distributing the power on as few generators as possible. The duration of this test is to be sufficient to reach stable operating temperatures of all rotating machines or for at least 4 hours. When some of the gen. set(s) cannot be tested due to insufficient time during the propulsion system test mentioned above, those required tests are to be carried out separately.

   - Demonstration of the generator prime movers' and governors' ability to handle load steps as described in Ch 1, Sec 2, [2.7].

g) Propulsion engines also driving power take off (PTO) generator.
- 100% engine power (MCR) at corresponding speed n_0: at least 4 hours.
- 100% propeller branch power at engine speed n_0 (unless covered in previous bullet point): 2 hours.
- 100% PTO branch power at engine speed n0: at least 1 hour.

h) Engines driving auxiliaries.
- 100% power (MCR) at corresponding speed n_0: at least 30 min.
- Approved intermittent overload: testing for duration as approved.

3.5.5 Torsional vibration - barred speed range

Where a barred speed range (bsr) is required, passages through this bsr, both accelerating and decelerating, are to be demonstrated. The times taken are to be recorded and are to be equal to or below those times stipulated in the approved documentation, if any. This also includes when passing through the bsr in reverse rotational direction, especially during the stopping test.

Note 1: Applies both for manual and automatic passing-through systems.

The ship's draft and speed during all these demonstrations is to be recorded. In the case of a controllable pitch propeller, the pitch is also to be recorded.

The engine is to be checked for stable running (steady fuel index) at both upper and lower borders of the bsr. Steady fuel index means an oscillation range less than 5% of the effective stroke (idle to full index).

3.6 Test of air starting system for main and auxiliary engines

3.6.1 The capability of the starting air system to charge the air receivers within one hour from atmospheric pressure to a pressure sufficient to ensure the number of starts required in Sec 10, [17.3.1] for main and auxiliaries engines is to demonstrated.

3.7 Tests of steam turbines

3.7.1 Main propulsion turbines

Main turbines are to be subjected during dock trials and subsequent sea trials to the following tests:
- operation at rated rpm for at least 3 hours
- reversing manoeuvres
- astern revolutions equal to at least 70% of the rated ahead rpm.

During astern and subsequent forward operation, the steam pressures and temperatures and the relative expansion are not to assume magnitudes liable to endanger the safe operation of the plant.

During the trials all safety, alarm, shut-off and control systems associated to the turbine are to be tested or properly simulated.

Note 1: Note 1: The astern trial is to be limited to 30 minutes or in accordance with manufacturer's recommendation to avoid overheating of the turbine due to the effects of "windage" and friction.

3.7.2 Auxiliary turbines

Turbines driving electric generators or auxiliary machines are to be run for at least 4 hours at their rated power and for 30 minutes at 110% of rated power.

During the trials all safety, alarm, shut-off and control systems associated to the turbine are to be tested or properly simulated.

3.8 Tests of gas turbines

3.8.1 Main propulsion turbines

Main turbines are to be subjected during dock trials and subsequent sea trials to the following tests:
- operation at rated rpm for at least 3 hours
- ship reversing manoeuvres.

During the various operations, the pressures, temperatures and relative expansion are not to assume magnitudes liable to endanger the safe operation of the plant.

During the trials all safety, alarm, shut-off and control systems associated to the turbine are to be tested or properly simulated.

3.8.2 Auxiliary turbines

Turbines driving electric generators or auxiliary machines are to be run for at least 4 hours at their rated power and for 30 minutes at 110% of rated power.

During the trials all safety, alarm, shut-off and control systems associated to the turbine are to be tested or properly simulated.

3.9 Tests of electric propulsion system

3.9.1 Dock trials

a) The dock trials are to include the test of the electrical production system, the power management and the load limitation.

b) A test of the propulsion plant at a reduced power, in accordance with dock trial facilities, is to be carried out. During this test, the following are to be checked:
   - electric motor rotation speed variation
   - functional test, as far as practicable (power limitation is to be tested with a reduced value)
   - protection devices
   - monitoring and alarm transmission including interlocking system.

c) Prior to the sea trials, an insulation test of the electric propulsion plant is to be carried out.

3.9.2 Sea trials

Testing of the performance of the electric propulsion system is to be effected in accordance with an approved test program.

This test program is to include at least:

- Speed rate of rise
- Endurance test:
  - operation at normal continuous cruise power for at least 4 hours
  - 1 hour at 100% rated output power with winding temperature rise below 2°K per hour, according to IEC publication 60034-1
  - operation in reverse direction of propeller rotation at the maximum torque or thrust allowed by the propulsion system for 10 minutes.
- Check of the crash astern operation in accordance with the sequence provided to reverse the speed from full ahead to full astern, in case of emergency. During this test, all necessary data concerning any effects of the reversing of power on the generators are to be recorded, including the power and speed variation
- Test of functionality of electric propulsion, when manoeuvring and during the ship turning test
- Test of power management performance: reduction of power due to loss of one or several generators to check, in each case, the power limitation and propulsion availability.

3.10 Tests of gears

3.10.1 Tests during sea trials

During the sea trials, the performance of reverse and/or reduction gearing is to be verified, both when running ahead and astern.

In addition, the following checks are to be carried out:

- check of the bearing and oil temperature
- detection of possible gear hammering, where required by Ch 1, Sec 9, [3.5.1]
- test of the monitoring, alarm and safety systems.

3.10.2 Check of the tooth contact

a) Prior to the sea trials, the tooth surfaces of the pinions and wheels are to be coated with a thin layer of suitable coloured compound.

   Upon completion of the trials, the tooth contact is to be inspected. The contact marking is to appear uniformly distributed without hard bearing at the ends of the teeth and without preferential contact lines.

   The tooth contact is to comply with Tab 1.

b) The verification of tooth contact at sea trials by methods other than that described above will be given special consideration by the Society.

c) In the case of reverse and/or reduction gearing with several gear trains mounted on roller bearings, manufactured with a high standard of accuracy and having an input torque not exceeding 20000 N·m, the check of the tooth contact may be reduced at the Society's discretion.

   Such a reduction may also be granted for gearing which has undergone long workshop testing at full load and for which the tooth contact has been checked positively.

   In any case, the teeth of the gears are to be examined by the Surveyor after the sea trials. Subject to the results, additional inspections or re-examinations after a specified period of service may be required.

3.11 Tests of main propulsion shafting and propellers

3.11.1 Shafting alignment

Where alignment calculations are required to be submitted in pursuance of Ch 1, Sec 7, [3.4.1], the alignment conditions are to be checked on board by the Shipyard, as follows:

a) shafting installation and intermediate bearing position, before and during assembling of the shafts:
- optical check of the relative position of bushes after fitting
- check of the flanged coupling parameters (gap and sag)
- check of the centring of the shaft sealing glands

b) engine (or gearbox) installation, with floating ship:
- check of the engine (or gearbox) flanged coupling parameters (gap and sag)
- check of the crankshaft deflections before and after the connection of the engine with the shaft line, by measuring the variation in the distance between adjacent webs in the course of one complete revolution of the engine

Note 1: The ship is to be in the loading conditions defined in the alignment calculations.

c) load on the bearings:
- check of the intermediate bearing load by means of jack-up load measurements
- check of the bearing contact area by means of coating with an appropriate compound.

Table 1 : Tooth contact for gears

Heat treatment and machining	Percentage of tooth contact	
	across the whole face width	of the tooth working depth
quenched and tempered, cut	70	40
• quenched and tempered, shaved or ground • surface-hardened	90	40

3.11.2 Shafting vibrations

Torsional vibration measurements are to be carried out where required by Ch 1, Sec 9. The type of the measuring equipment and the location of the measurement points are to be specified.

3.11.3 Bearings

The temperature of the bearings is to be checked under the machinery power conditions specified in [3.1.2].

3.11.4 Stern tube sealing gland

The stern tube oil system is to be checked for possible oil leakage through the stern tube sealing gland.

3.11.5 Control system of controllable pitch propellers

a) The control system of controllable pitch propellers is to be tested during sea trial to demonstrate:
- the functioning of the system controlling the pitch from full ahead to full astern position. It is also to be checked that this system does not induce any overload of the engine
- that the propelling thrust is not significantly altered when transferring control from one location to another and in case of failures in the pitch command and control or feedback signals.
- that the pitch response times measured during the test do not exceed the maximum value to be defined by the pitch control system manufacturer or integrator.

b) The test procedure is to be established with the manufacturer and is to be approved by the Society. It is to include:
- Pitch response test

  A full range of tests is to be carried out to get the pitch response and verify that it coincides with the combinator curve of the propeller. The tests are to be carried out for at least three positions of the control lever in ahead and astern directions (e.g., dead slow ahead / astern, half ahead / astern, full ahead / astern).

  The tests are to be carried out in normal and emergency operating conditions.

  Tests that are not affected by the control position may be carried out from one control position only.
- Test of the fail-to-safe characteristics

  A test of the fail-to-safe characteristics of the propeller pitch control system is to be carried out to demonstrate that failures in the pitch command and control or feedback signals are alarmed and do not cause any change of thrust. Such failures are to be clearly identified and included in the test procedure.

Note 1: The combinator curve is the relationship between the propeller pitch setting and the propeller speed.

c) The list of the parameters to be recorded is to be established with the manufacturer and is to be approved by the Society. It is to include at least the following parameters:

- position of the control handle
- actual pitch indication (local indication, remote indications)
- rotational speed of the propeller
- response time between the pitch change order (modification of the lever position) and the instant when the pitch and propeller speed have reached their final position
- propelling thrust variation during the transfer of the control from one location to another one.

3.12 Tests of piping systems

3.12.1 Hydrostatic tests of piping after assembly on board

a) When the hydrostatic tests of piping referred to in Ch 1, Sec 10, [20.5.2] are carried out on board, they may be carried out in conjunction with the leak tests required in [3.12.2].

b) Low pressure pipes, such as bilge or ballast pipes are to be tested, after fitting on board, under a pressure at least equal to the maximum pressure to which they can be subjected in service. Moreover, the parts of such pipes which pass, outside pipe tunnels, through compartments for ballast water, fresh water, fuel or liquid cargo, are to be fitted before the hydraulic test of the corresponding compartments.

c) Heating coils in oil fuel tanks or in liquid cargo tanks and fuel pipes are to be subjected, after fitting on board, to a hydraulic test under a pressure not less than 1,5 times the design pressure, with a minimum of 4 bars.

d) For pressure tests of plastic pipes after assembly on board, see Ch 1, App 3, [4.9].

3.12.2 Leak tests

Except otherwise permitted by the Society, all piping systems are to be leak tested under operational conditions after completion on board.

Pneumatic leak testing may be carried out on water sensitive systems, in lieu of hydrostatic testing. In certain circumstances, a combined hydrostatic – pneumatic strength test may also be applied, where the system is partially filled with water and the free space above is pressurized with a test gas (typically air or nitrogen). When pneumatic tests cannot be avoided, the relevant safety precautions are to be observed. See Ch 1, Sec 10, [20.5.1].

3.12.3 Functional tests

During the sea trials, piping systems serving propulsion and auxiliary machinery, including the associated monitoring and control devices, are to be subjected to functional tests at the nominal power of the machinery. Operating parameters (pressure, temperature, consumption) are to comply with the values recommended by the equipment manufacturer.

3.12.4 Performance tests

The Society reserves the right to require performance tests, such as flow rate measurements, should doubts arise from the functional tests.

3.13 Tests of steering gear

3.13.1 General

a) The steering gear is to be tested during the sea trials under the conditions stated in [3.1] in order to demonstrate, to the Surveyor's satisfaction, that the applicable requirements of Ch 1, Sec 14 are fulfilled.

b) For controllable pitch propellers, the propeller pitch is to be set at the maximum design pitch approved for the maximum continuous ahead rotational speed.

c) If the ship cannot be tested at the deepest draught, alternative trial conditions will be given special consideration by the Society. In such case, the ship speed corresponding to the maximum continuous number of revolutions of the propulsion machinery may apply.

3.13.2 Tests to be performed

Tests of the steering gear are to include at least:

a) functional test of the main and auxiliary steering gear with demonstration of the performances required by Ch 1, Sec 14, [2.3]

b) test of the steering gear power units, including transfer between steering gear power units

c) test of the isolation of one power actuating system, checking the time for regaining steering capability

d) test of the hydraulic fluid refilling system

e) test of the alternative power supply required by Ch 1, Sec 14, [2.7.2], item e)

f) test of the steering gear controls, including transfer of controls and local control

g) test of the means of communication between the navigation bridge, the engine room and the steering gear compartment

h) test of the alarms and indicators

i) where the steering gear design is required to take into account the risk of hydraulic locking, a test is to be performed to demonstrate the efficiency of the devices intended to detect this.

Note 1: Tests d) to i) may be carried out either during the mooring trials or during the sea trials.

Note 2: For ships of less than 500 gross tonnage and for fishing vessels, the Society may accept departures from the above list, in particular to take into account the actual design features of their steering gear.

Note 3: Azimuth thrusters are to be subjected to the above tests, as far as applicable.

4 Inspection of machinery after sea trials

4.1 General

4.1.1

a) For all types of propulsion machinery, those parts which have not operated satisfactorily in the course of the sea trials, or which have caused doubts to be expressed as to their proper operation, are to be disassembled or opened for inspection.

Machinery or parts which are opened up or disassembled for other reasons are to be similarly inspected.

b) Should the inspection reveal defects or damage of some importance, the Society may require other similar machinery or parts to be opened up for inspection.

c) An exhaustive inspection report is to be submitted to the Society for information.

4.2 Diesel engines

4.2.1

a) In general, for all diesel engines, the following items are to be verified:
   - the deflection of the crankshafts
   - the cleanliness of the lubricating oil filters.

b) In the case of propulsion engines for which power tests have not been carried out in the workshop, some parts, agreed upon by the interested parties, are to be disassembled for inspection after the sea trials.

Appendix 1 Calculation for Internal Combustion Engine Crankshafts

Symbols

B : Width of the web, in mm (see Fig 3)
In case of 2-stroke semi-built crankshafts, B is to be taken in way of crankpin fillet radius centre according to Fig 3

D : Crankpin diameter, in mm (see Fig 3 and Fig 4)

D_A : Outside diameter of web, in mm, as defined in [1.2.1], item p)

D_{BG} : Diameter of axial bore in journal, in mm (see Fig 3 and Fig 4)

D_{BH} : Diameter of axial bore in crankpin, in mm (see Fig 3)

D_G : Journal diameter, in mm (see Fig 3 and Fig 4)

D_O : Diameter of oil bore in crankpin, in mm (see Fig 5)

D_S : Shrink-fit diameter, in mm (see Fig 4)

E : Pin eccentricity, in mm (see Fig 3)

F : Area, in mm^2, related to the reference cross-section of web, equal to:
F = B W

K : Crankshaft manufacturing process factor, as defined in [6.1.1], item a)

K_e : Empirical factor considering to some extent the influence of adjacent crank and bearing restraint, and taken as follows:
- K_e = 0,8 for 2-stroke engines
- K_e = 1,0 for 4-stroke engines

L_S : Axial length of the shrink-fit, in mm (see Fig 4)

M_{BO} : Bending moment calculated at the outlet of crankpin oil bore, in N·m, equal to:
$M_{BO} = M_{BTO} \cos \psi + M_{BRO} \sin \psi$

M_{BOmax} : Maximum value of the bending moment M_{BO} within one working cycle, in N·m

M_{BOmin} : Minimum value of the bending moment M_{BO} within one working cycle, in N·m

M_{BON} : Alternating bending moment calculated at the outlet of crankpin oil bore, in N·m, defined in [2.1.2], item d)

M_{BRF} : Bending moment acting in web, in N·m, as defined in [2.1.1], item c)

M_{BRFmax} : Maximum value of the bending moment $M_{BRF \text{ within one working cycle}}$, in N·m

M_{BRFmin} : Minimum value of the bending moment $M_{BRF \text{ within one working cycle}}$, in N·m

M_{BRFN} : Alternating bending moment related to the centre of the web, in N·m, defined in [2.1.2], item b)

M_{BRO} : Bending moment of the radial component of the connecting rod force, in N·m (see Fig 5)

M_{BTO} : Bending moment of the tangential component of the connecting rod force, in N·m (see Fig 5)

M_T : Torque, in N·m

M_{Tmax} : Maximum value of the torque M_T within one working cycle, in N·m

M_{Tmin} : Minimum value of the torque M_T within one working cycle, in N·m

M_{TN} : Alternating torque, in N·m, as defined in [2.2.2]

Q_1 : Acceptability factor for the crankpin fillet, as defined in [7.1.1]

Q_2 : Acceptability factor for the journal fillet, as defined in [7.1.1]

Q_3 : Acceptability factor for the crankpin outlet of oil bore, as defined in [7.1.1]

Q_{RF} : Radial force acting in web, in N, as defined in [2.1.1], item c)

Q_{RFmax} : Maximum value of the radial force Q_{RF} within one working cycle, in N

Q_{RFmin} : Minimum value of the radial force Q_{RF} within one working cycle, in N

Q_{RFN} : Alternating radial force related to the web, in N, as defined in [2.1.2], item c)

R_G : Fillet radius of journal, in mm (see Fig 3 and Fig 4)

R_H : Fillet radius of crankpin, in mm (see Fig 3)

R_m : Minimum specified tensile strength of crankshaft material, in N/mm^2

S : Pin overlap, in mm, given by the following formula (see Fig 3):

$$S = \frac{D + D_G}{2} - E$$

Where pins do not overlap, the negative value of S calculated by the above formula is to be considered

T_G : Recess of journal fillet, in mm (see Fig 3)

T_H : Recess of crankpin fillet, in mm (see Fig 3)

W : Axial web thickness, in mm (see Fig 3)

W_e : Section modulus related to the cross-section of axially bored crankpin, in mm³, equal to:

$$W_e = \frac{\pi}{32}\left(\frac{D^4 - D_{BH}^4}{D}\right)$$

W_{eqw} : Section modulus related to the cross-section of web, in mm³, equal to:

$$W_{eqw} = \frac{B \cdot W^2}{6}$$

W_{PG} : Polar section modulus related to cross-section of axially bored journal, in mm³, equal to:

$$W_{PG} = \frac{\pi}{16}\left(\frac{D_G^4 - D_{BG}^4}{D_G}\right)$$

W_{PH} : Polar section modulus related to cross-section of axially bored crankpin, in mm³, equal to:

$$W_{PH} = \frac{\pi}{16}\left(\frac{D^4 - D_{BH}^4}{D}\right)$$

W_{red} : Reduced axial web thickness, in mm, to be considered instead of W in the case of 2-stroke semi-built crankshafts with $T_H > R_H$ and to be taken as equal to (see Fig 3):

$W_{red} = W - (T_H - R_H)$

α_B : Stress concentration factor for bending in crankpin fillet, as evaluated in [3.1.2], item a)

α_T : Stress concentration factor for torsion in crankpin fillet, as evaluated in [3.1.2], item b)

β_B : Stress concentration factor for bending in journal fillet, as evaluated in [3.1.3], item a)

β_Q : Stress concentration factor for compression due to radial force in journal fillet, as evaluated in [3.1.3], item b)

β_T : Stress concentration factor for torsion in journal fillet, as evaluated in [3.1.3], item c)

γ_B : Stress concentration factor for bending in crankpin oil bore, as evaluated in [3.1.4]

γ_T : Stress concentration factor for torsion in outlet of crankpin oil bore, as evaluated in [3.1.4]

σ_{add} : Additional bending stress, in N/mm², due to misalignment, as defined in [4.1.1]

σ_{BFN} : Nominal alternating bending stress related to the web, in N/mm², as defined in [2.1.2], item b)

σ_{BG} : Alternating bending stress in journal fillet, in N/mm², as defined in [2.1.3], item b)

σ_{BH} : Alternating bending stress in crankpin fillet, in N/mm², as defined in [2.1.3], item a)

σ_{BO} : Alternating bending stress in outlet of crankpin oil bore, in N/mm², as defined in [2.1.4]

σ_{BON} : Nominal alternating bending stress related to the crankpin diameter, in N/mm², as defined in [2.1.2], item d)

σ'_{DW} : Allowable alternating bending fatigue strength of crankshaft in the crankpin fillet area, in N/mm², as defined in [6.1.1], item a)

σ''_{DW} : Allowable alternating bending fatigue strength of crankshaft in the journal fillet area, in N/mm², as defined in [6.1.1], item b)

σ'''_{DW} : Allowable alternating bending fatigue strength of crankshaft in the crankpin oil bore area, in N/mm², as defined in [6.1.1], item c)

σ_{QFN} : Nominal alternating compressive stress due to radial force related to the web, in N/mm², as defined in [2.1.2], item c)

σ_{TO} : Alternating torsional stress in outlet of crankpin oil bore, in N/mm², as defined in [2.2.3], item c)

σ'_V : Equivalent alternating stress in way of crankpin fillet, in N/mm², as defined in [5.2.1], item a)

σ''_V : Equivalent alternating stress in way of journal fillet, in N/mm², as defined in [5.2.1], item b)

σ'''_V : Equivalent alternating stress in way of outlet of crankpin oil bore, in N/mm², as defined in [5.2.1], item c)

τ_G : Alternating torsional stress in journal fillet, in N/mm², as defined in [2.2.3], item b)

τ_H : Alternating torsional stress in way of crankpin fillet, in N/mm², as defined in [2.2.3], item a)

τ_{NG} : Nominal alternating torsional stress related to journal diameter, in N/mm², as defined in [2.2.2]

τ_{NH} : Nominal alternating torsional stress related to crankpin diameter, in N/mm², as defined in [2.2.2]

ψ : Angular position, in deg (see Fig 5).

1 General

1.1 Application

1.1.1

a) These Rules for the design of crankshafts are to be applied to I.C. engines for propulsion and auxiliary purposes, where the engines are capable of continuous operation at their rated power when running at rated speed.

Where a crankshaft design involves the use of surface treated fillets, or when fatigue parameter influences are tested, or when working stresses are measured, the relevant documents with calculations/analysis are to be submitted to the Society in order to demonstrate equivalence to the Rules.

b) These Rules apply only to solid-forged and semi-built crankshafts of forged or cast steel, with one crank throw between main bearings.

1.2 Documentation to be submitted

1.2.1 The following documents and particulars required for the calculation of crankshafts as indicated in Ch 1, Sec 2, Tab 1 and Ch 1, Sec 2, Tab 2 are to be submitted:

a) engine builder

b) crankshaft drawings containing all the data in respect of the geometrical configurations of the crankshaft

c) engine type designation

d) kind of engine:
- in-line engine or V-type engine with adjacent connecting rods
- V-type engine with forked/inner connecting rods
- V -type engine with articulated-type connecting rods
- crosshead engine or trunk piston engine

e) operating method: 2-stroke or 4-stroke cycle

f) combustion method: direct injection, precombustion chamber, etc

g) number of cylinders
diameter of cylinders, in mm
length of piston stroke, in mm
length of connecting rod (between bearing centers), in mm

h) rated power, in kW
rated engine speed, in rpm
mean effective pressure, in bar
mean indicated pressure, in bar
maximum net cylinder pressure Pmax, in bar
charge air pressure (before inlet valves or scavenge ports, whichever applies), in bar
nominal compression ratio

i) direction of rotation: clockwise or counter clockwise (see Fig 1)

j) firing order (corresponding to item i) with the respective ignition intervals, in deg

k) oscillating mass of one cylinder (mass of piston, rings, pin, piston rod, crosshead, oscillating part of connecting rod), in kg
mass of connecting rod, in kg, and position of gravity centre

l) digitalized gas pressure curve presented at equidistant intervals, in bar versus crank angle (at least every 5° CA)

m) for V-type engines: V-angle α_v , in deg (see Fig 1)

Figure 1 : Designation of the cylinders

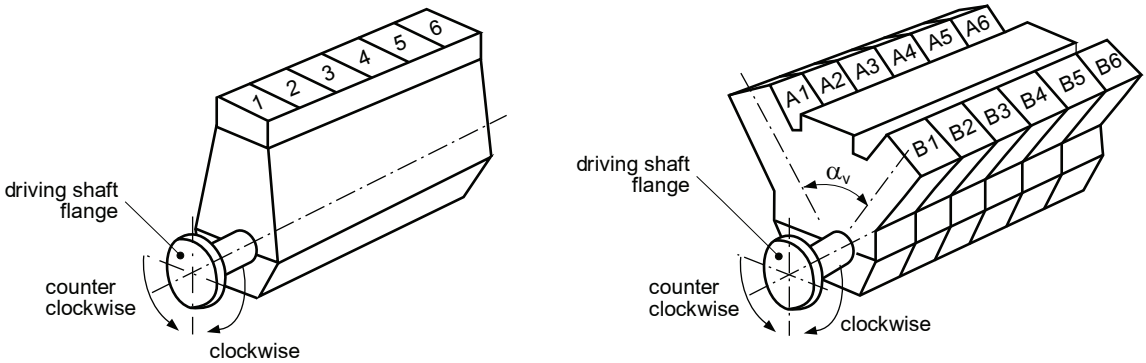

n) data of crankshaft:
- drawing number
- kind of crankshaft (e.g. solid-forged crankshaft, semi-built crankshaft, etc.)
- method of manufacture (e.g. free form forged, continuous grain flow forged, drop-forged, etc.), with description of the forging process
- heat treatment (e.g. tempered)
- every surface treatment affecting fillets or oil holes
- particulars of alternating torsional stress calculations (see [2.2])

o) crank dimensions necessary for the calculation of stress concentration factors, in mm unless other specified (see Fig 2 and Fig 3):
- crankpin diameter D
- diameter of axial bore in crankpin D_{BH}
- fillet radius of crankpin R_H
- recess of crankpin fillet T_H
- journal diameter D_G
- diameter of axial bore in journal D_{BG}
- fillet radius of journal R_G
- recess of journal fillet T_G
- web thickness W
- web width B
- bending length L_1
- bending length L_2
- bending length L_3
- diameter of oil bore in crankpin D_O
- smallest edge radius of oil bore
- surface roughness of oil bore fillet
- inclination of oil bore axis related to shaft axis Y, in deg.

p) additional data for shrink-fits of semi-built crankshafts, in mm unless other specified (see Fig 4):
- shrink diameter D_S
- length of shrink-fit L_S
- outside diameter of web D_A or twice the minimum distance x (see Fig 4) between centreline of journals and outer contour of web, whichever is less
- distance y between the adjacent generating lines of journal and pin connected to the same web

  In general: $y \geq 0{,}05\ D_S$

  Where y is less than $0{,}1\ D_S$, special consideration is to be given by the Society to the effect of the stress due to the shrink-fit on the fatigue strength at the crankpin fillet
- amount of shrink-fit (upper and lower tolerances)
- maximum torque, in N·m
- maximum nominal alternating torsional stress (ascertained by means of a harmonic synthesis and related to cross-sectional area of bored crankpin), in N/mm²
- engine speed (at which the maximum nominal alternating torsional stress occurs), in rpm
- minimum engine speed (for which the harmonic synthesis was carried out), in rpm

q) details of crankshaft material:
- material designation (according to ISO, EN, DIN, AISI, etc.)
- mechanical properties of material (minimum values obtained from longitudinal test specimens):
  - tensile strength, in N/mm²
  - yield strength, in N/mm²
  - reduction in area at break, in %
  - elongation A_5, in %
  - impact energy – KV, in J
  - Young's modulus, in N/mm²
- method of crankshaft material melting process (e.g. open-hearth furnace, electric furnace, etc.)

r) data of stress concentration factors (S.C.F.) to be given only when data for stress concentration factors and/or fatigue are furnished by the engine manufacturer on the basis of measurements (full supporting details are to be enclosed):

- S.C.F. for bending in crankpin fillet α_B
- S.C.F. for torsion in crankpin fillet α_T
- S.C.F. for bending in journal fillet β_B
- S.C.F. for torsion in journal fillet β_T
- S.C.F. for compression in journal fillet β_Q

allowable fatigue strength of crankshaft σ_{DW}, in N/mm².

Figure 2 : Crank throw of solid crankshaft

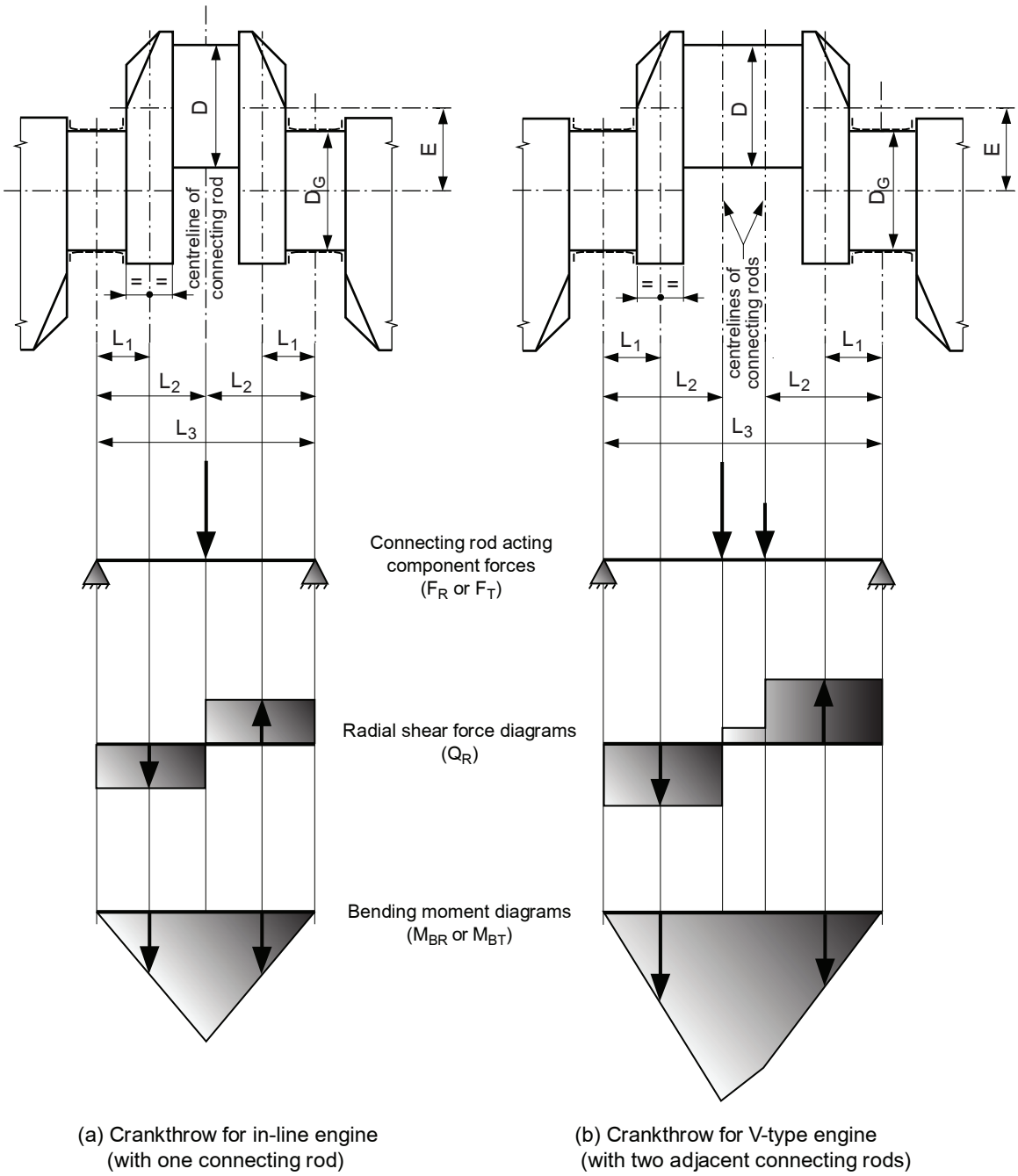

L_1 : Distance between main journal centreline and crankweb centre (see also Fig 3 for crankshaft without overlap)

L_2 : Distance between main journal centreline and connecting rod centre

L_3 : Distance between two adjacent main journal centrelines.

Figure 3 : Reference area of crankweb cross-section and crank dimensions

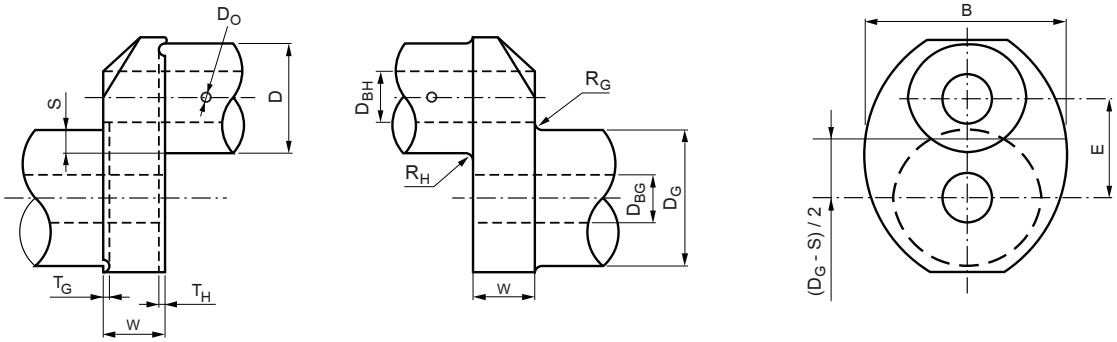

Overlapped crankshaft

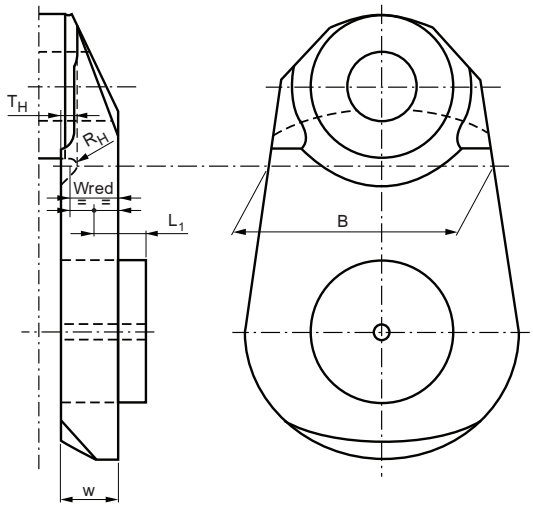

Crankshaft without overlap

Figure 4 : Crank throw of semi-built crankshaft

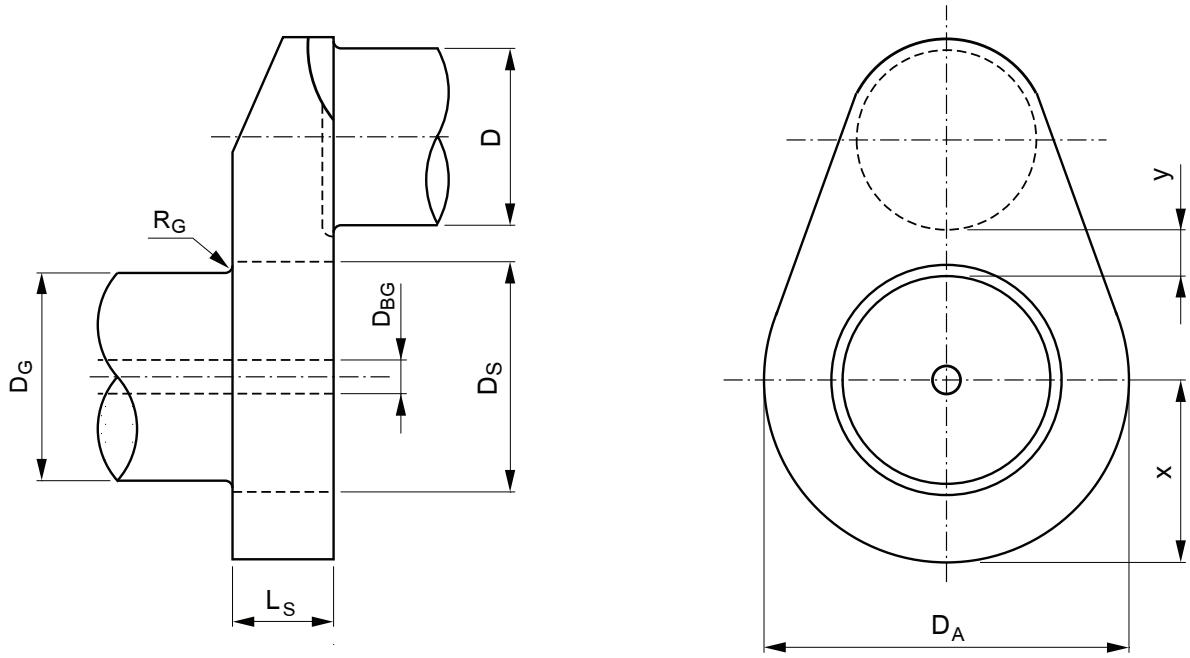

1.3 Principles of calculation

1.3.1 The design of crankshafts is based on an evaluation of safety against fatigue in the highly stressed areas.

The calculation is also based on the assumption that the areas exposed to highest stresses are:

- fillet transitions between the crankpin and web as well as between the journal and web
- outlets of crankpin oil bores.

When the journal diameter is equal to or larger than the crankpin one, the outlets of main journal oil bores are to be formed in a similar way to the crankpin oil bores, otherwise separate documentation of fatigue safety may be required.

Calculation of crankshaft strength consists initially in determining the nominal alternating bending (see [2.1]) and nominal alternating torsional stresses (see [2.2]) which, multiplied by the appropriate stress concentration factors using the theory of constant energy of distortion (von Mises' Criterion, see [3]), result in an equivalent alternating stress (uni-axial stress, see [5]). This equivalent alternating stress is then compared with the fatigue strength of the selected crankshaft material (see [6]). This comparison will show whether or not the crankshaft concerned is dimensioned adequately (see [7]).

2 Calculation of alternating stresses

2.1 Calculation of alternating stresses due to bending moments and radial forces

2.1.1 Assumptions

a) The calculation is based on a statically determined system, composed of a single crank throw supported in the centre of adjacent main journals and subject to gas and inertia forces. The bending length is taken as the length between the two main bearing midpoints (distance L_3, see Fig 2 (a) and Fig 2 (b)).

b) The bending moments M_{BR} and M_{BT} are calculated in the relevant section based on triangular bending moment diagrams due to the radial component F_R and the tangential component F_T of the connecting rod force, respectively (see Fig 2 (a)).

For crank throws with two connecting rods acting upon one crankpin, the relevant bending moments are obtained by superposition of the two triangular bending moment diagrams according to phase (see Fig 2 (b)).

c) Bending moments and radial forces acting in web

The bending moment M_{BRF} and the radial force Q_{RF} are taken as acting in the centre of the solid web (distance L_1 in Fig 2) and are derived from the radial component of the connecting rod force.

The alternating bending and compressive stresses due to bending moments and radial forces are to be related to the cross-section of the crank web:

- at the centre of the overlap S in cases of overlap of the pins (see Fig 3), and
- at the centre of the distance y between the adjacent generating lines of the two pins in cases of pins which do not overlap (see Fig 4).

This reference cross-section results from the web thickness W and the web width B (see Fig 3).

Mean stresses are neglected.

d) Bending acting in outlet of crankpin oil bore

The two relevant bending moments M_{BRO} and M_{BTO} (see Symbols and Fig 5) are taken in the crankpin cross-section through the oil bore.

The alternating stresses due to these bending moments are to be related to the cross-sectional area of the axially bored crankpin.

Mean bending stresses are neglected.

Figure 5 : Crankpin section through the oil bore

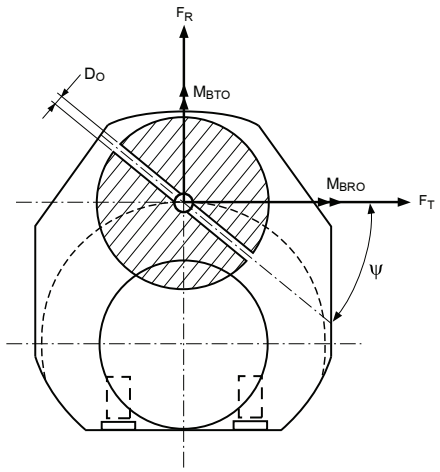

2.1.2 Calculation of nominal alternating bending and compressive stresses in web

a) The radial and tangential forces due to gas and inertia loads acting upon the crankpin at each connecting rod position will be calculated over one working cycle.

A simplified calculation of the radial forces may be used at the discretion of the Society.

Using the forces calculated over one working cycle and taking into account of the distance from the main bearing midpoint, the time curve of the bending moments M_{BRF}, M_{BRO}, M_{BTO} and radial forces Q_{RF} (see Symbols) will be then calculated.

In case of V-type engines, the bending moments (progressively calculated from the gas and inertia forces and for the various crank angles) of the two cylinders acting on one crank throw are superposed according to phase. Different designs (forked connecting rod, articulated-type connecting rod or adjacent connecting rods) shall be taken into account.

Where there are cranks of different geometrical configurations (e.g. asymmetrical cranks) in one crankshaft, the calculation is to cover all crank variants.

b) Nominal alternating bending stress in web cross-section

The nominal alternating bending stress σ_{BFN} related to the web is calculated, in N/mm², as follows:

$$\sigma_{BFN} = \pm \frac{M_{BRFN}}{W_{eqw}} \cdot K_e \cdot 10^3$$

where:

M_{BRFN} : Alternating bending moment related to the centre of the web, in N·m, equal to (see Fig 2 (a) and Fig 2 (b)):

$M_{BRFN} = \pm 0,5\ (M_{BRFmax} - M_{BRFmin})$

W_{eqw}, K_e, M_{BRFmax}, M_{BRFmin} : As defined in Symbols.

c) Nominal alternating compressive stress in web cross-section

The nominal alternating compressive stress σ_{QFN} due to radial force related to the web is calculated, in N/mm², as follows:

$$\sigma_{QFN} = \pm \frac{Q_{RFN}}{F} \cdot K_e$$

where:

Q_{RFN} : Alternating radial force related to the web, in N, equal to (see Fig 2 (a) and Fig 2 (b)):

$Q_{RFN} = \pm 0,5\ (Q_{RFmax} - Q_{RFmin})$

F, K_e, Q_{RFmax}, Q_{RFmin} : As defined in Symbols.

d) Nominal alternating bending stress in outlet of crankpin oil bore

The nominal alternating bending stress σ_{BON} related to the crankpin diameter is calculated, in N/mm², as follows:

$$\sigma_{BON} = \pm \frac{M_{BON}}{W_e} \cdot 10^3$$

where:

M_{BON} : Alternating bending moment calculated at the outlet of crankpin oil bore, in N·m, equal to:

$M_{BON} = \pm 0,5\ (M_{BOmax} - M_{BOmin})$

W_e, M_{BOmax}, M_{BOmin} : As defined in Symbols.

2.1.3 Calculation of alternating bending stresses in fillets

a) The alternating bending stress σ_{BH} in crankpin fillet is calculated, in N/mm², as follows:

$$\sigma_{BH} = \pm (\alpha_B \cdot \sigma_{BFN})$$

b) The alternating bending stress σ_{BG} in journal fillet is calculated, in N/mm², as follows (not applicable to semi-built crankshafts):

$$\sigma_{BG} = \pm (\beta_B \cdot \sigma_{BFN} + \beta_Q \cdot \sigma_{QFN})$$

where:

α_B, β_B, β_Q : Stress concentration factors as defined in [3.1]

σ_{BFN}, σ_{QFN} : Stresses as defined in [2.1.2], item b) and item c) respectively.

2.1.4 Calculation of alternating bending stress in outlet of crankpin oil bore

The alternating bending stress σ_{BO} in outlet of crankpin oil bore is calculated, in N/mm², as follows:

$$\sigma_{BO} = \pm (\gamma_B \cdot \sigma_{BON})$$

where:

γ_B : Stress concentration factor as defined in [3.1.4]

σ_{BON} : Stress as defined in [2.1.2], item d).

2.2 Calculation of alternating torsional stresses

2.2.1 General

The calculation for nominal alternating torsional stresses is to be undertaken by the engine manufacturer according to the information contained in [2.2.2].

The maximum nominal alternating torsional stress is to be specified by the manufacturer.

The maximum value obtained from such calculations will be used by the Society when determining the equivalent alternating stress according to the provisions of Article [5].

In the absence of such a maximum value, the Society reserves the right to incorporate a fixed value in the calculation for the crankshaft dimensions, to be established at its discretion in each case.

In the event of the Society being entrusted to carry out a forced vibration calculation on behalf of the engine manufacturer to determine the torsional vibration stresses expected in the engine and where relevant in the shafting, the following data are to be submitted in addition to those required in [1.2.1]:

a) equivalent dynamic system of the engine, comprising:
   - mass moment of inertia of every mass point, in kg.m^2
   - inertialess torsional stiffnesses, in N·m/rad, of all crankshaft parts between two mass points

b) vibration dampers, specifying:
   - type designation
   - mass moments of inertia, in kg.m^2
   - inertialess torsional stiffnesses, in N·m/rad
   - values of the damping coefficients, in N·m.s

c) flywheels, specifying:
   - mass moment of inertia, in kg·m^2.

Where the whole propulsion system is to be considered, the following information is also to be submitted:

a) elastic couplings, specifying:
   - dynamic characteristics and damping data, as well as the permissible value of alternating torque

b) gearing and shafting, specifying:
   - shaft diameters of gear shafts, thrust shafts, intermediate shafts and propeller shafts, mass moments of inertia, in kg·m^2, of gearing or important mass points, gear ratios and, for gearboxes of complex type, the schematic gearing arrangement

c) propellers, specifying:
   - propeller diameter
   - number of blades
   - pitch and developed area ratio
   - mass moment of inertia of propeller in air and with entrained water, in kg·m^2 (for controllable pitch propellers both the values at full pitch and at zero pitch are to be specified)
   - damping characteristics, if available and documented

d) natural frequencies with their relevant modes of vibration and the vector sums for the harmonics of the engine excitation

e) estimated torsional vibration stresses in all important elements of the system with particular reference to clearly defined resonance speeds of rotation and continuous operating ranges.

2.2.2 Calculation of nominal alternating torsional stresses

The maximum and minimum values of the alternating torques are to be ascertained for every mass point of the complete dynamic system and for the entire speed range by means of a harmonic synthesis of the forced vibrations from the 1st order up to and including the 15th order for 2-stroke cycle engines and from the 0,5th order up to and including the 12th order for 4-stroke cycle engines.

In performing this calculation, allowance is to be made for the damping that exists in the system and for unfavourable conditions (e.g., misfiring in one of the cylinders).

Note 1: Misfiring is defined as cylinder condition when no combustion occurs but only compression cycle.

The speed step calculation shall be selected in such a way that any resonance found in the operational speed range of the engine shall be detected.

Where barred speed ranges are necessary, they shall be arranged so that satisfactory operation is possible despite their existence. There are to be no barred speed ranges above a speed ratio of $\lambda \geq 0,8$ for normal firing conditions.

The values received from such calculation are to be submitted to the Society for consideration.

The nominal alternating torsional stresses referred to crankpin (τ_{NH}) and journal (τ_{NG}) in every mass point which is essential to the assessment result, in N/mm^2, from the following formulae:

$$\tau_{NH} = \pm \frac{M_{TN}}{W_{PH}} \cdot 10^3$$

$$\tau_{NG} = \pm \frac{M_{TN}}{W_{PG}} \cdot 10^3$$

where:

M_{TN} : Maximum alternating torque, in N·m, equal to:

$M_{TN} = \pm 0,5 \ (M_{Tmax} - M_{Tmin})$

W_{PH}, W_{PG}, M_{Tmax}, M_{Tmin} : As defined in Symbols.

Bored crankpins and journals whose bore longitudinal axis does not coincide with the axis of the said crankpins and journals, will be considered by the Society in each case.

For the purpose of the crankshaft assessment, the nominal alternating torsional stress considered in further calculations is the highest calculated value, according to above method, occurring at the most torsionally loaded mass point of the crankshaft system.

Where barred speed ranges exist, the torsional stresses within these ranges are not to be considered for assessment calculations.

The approval of crankshaft will be based on the installation having the largest nominal alternating torsional stress (but not exceeding the maximum figure specified by the engine manufacturer).

Thus, for each installation, it is to be ensured by suitable calculation that this approved nominal alternating torsional stress is not exceeded. This calculation is to be submitted to the Society for assessment (see Ch 1, Sec 9).

2.2.3 Calculation of alternating torsional stresses in fillets and outlet of crankpin oil bore

The calculation of the alternating torsional stresses is to be carried out for the crankpin fillet, the journal fillet and the outlet of the crankpin oil bore, as follows:

a) the alternating torsional stress τ_H, in N/mm², in way of crankpin fillet is given by the following formula:

$\tau_H = \pm (\alpha_T \cdot \tau_{NH})$

b) the alternating torsional stress τ_G, in N/mm², in way of journal fillet is given by the following formula (not applicable to semi-built crankshafts):

$\tau_G = \pm (\beta_T \cdot \tau_{NG})$

c) the alternating torsional stress σ_{TO}, in N/mm², in way of outlet of crankpin oil bore is given by the following formula:

$\sigma_{TO} = \pm (\gamma_T \cdot \tau_{NH})$

where:

α_T, β_T, γ_T, τ_{NG}, τ_{NH} : As defined in Symbols.

3 Evaluation of stress concentration factors (SCF)

3.1 General

3.1.1 The stress concentration factors are evaluated by means of the formulae according to [3.1.2], [3.1.3] and [3.1.4] applicable to the fillets and crankpin oil bore of solid forged web-type crankshafts and to the crankpin fillets of semi-built crankshafts only. It is to be noticed that stress concentration factor formulae concerning the oil bore are only applicable to a radially drilled oil hole. All formulae are based on investigations of FVV (Forschungsvereinigung Verbrennungskraftmaschinen) for fillets and on investigations of ESDU (Engineering Science Data Unit) for oil holes.

Where the geometry of the crankshaft is outside the boundaries of the analytical stress concentration factors, the calculation method detailed in Article [9] may be undertaken.

All crank dimensions necessary for the calculation of stress concentration factors are shown in Fig 3.

The stress concentration factors for bending (α_B and β_B) are defined as the ratio of the maximum equivalent von Mises stress (occurring in the fillets under bending load) to the nominal bending stress related to the web cross-section.

The stress concentration factor for compression (β_Q) in the journal fillet is defined as the ratio of the maximum equivalent von Mises stress (occurring in the fillet due to the radial force) to the nominal compressive stress related to the web cross-section.

The stress concentration factors for torsion (α_T and β_T) are defined as the ratio of the maximum equivalent shear stress (occurring in the fillets under torsional load) to the nominal torsional stress related to the axially bored crankpin or journal cross-section.

The stress concentration factors for bending (γ_B) and torsion (γ_T) are defined as the ratio of the maximum principal stress (occurring at the outlet of the crankpin oil hole under bending and torsional loads) to the corresponding nominal stress related to the axially bored crankpin cross-section.

When reliable measurements and/or calculations are available, which can allow direct assessment of stress concentration factors, the relevant documents and their analysis method have to be submitted to the Society in order to demonstrate their equivalence to the present rule evaluation. This is always to be performed when dimensions are outside of any of the validity ranges for the empirical formulae presented in [3.1.2] to [3.1.4].

Articles [9] and [12] describes how FE analyses can be used for the calculation of the stress concentration factors. Care should be taken to avoid mixing equivalent (von Mises) stresses and principal stresses.

For the calculation of stress concentration factors in crankpin and journal fillets, the related dimensions given in Tab 1 are to be applied.

Stress concentration factors are valid for the following ranges of related dimensions for which the investigations have been carried out:

$0,03 \le r_H \le 0,13$

$0,03 \le r_G \le 0,13$

$s \le 0,50$

$0,20 \le w \le 0,80$

$1,10 \le b \le 2,20$

$0 \le d_o \le 0,20$

$0 \le d_H \le 0,80$

$0 \le d_G \le 0,80$

Low range of s can be extended down to large negative values provided that:

- if the value of calculated factor f(recess) is less than 1, then f(recess) = 1 is to be considered
- if $s < -0,5$ then f(s,w) and f(r,s) are to be evaluated replacing the actual value of s by $s = -0,5$.

Table 1 : Related dimensions for calculation of stress concentration factors

Crankpin fillet	Journal fillet
$r_H = R_H / D$	$r_G = R_G / D$
$s = S / D$	
$w = W / D$ for crankshafts with overlap $w = W_{red} / D$ for crankshafts without overlap	
$b = B / D$	
$d_o = D_O / D$	
$d_H = d_{BH} / D$	$d_G = D_{BG} / D$
$t_H = T_H / D$	$t_G = T_G / D$

3.1.2 Crankpin fillet

a) The stress concentration factor for bending α_B is equal to:

$\alpha_B = 2,6914 \cdot f(s,w) \cdot f_1(w) \cdot f_1(b) \cdot f(r_H) \cdot f(d_G) \cdot f(d_H) \cdot f(recess)$

where:

$f(s,w) = -4,1883 + 29,2004\, w - 77,5925\, w^2 + 91,9454\, w^3$
$- 40,0416\, w^4 + (1 - s)\,(9,5440 - 58,3480\, w + 159,3415\, w^2$
$- 192,5846\, w^3 + 85,2916\, w^4) + (1 - s)^2\,(-3,8399 + 25,0444\, w - 70,5571\, w^2 + 87,0328\, w^3 - 39,1832\, w^4)$

$f_1(w) = 2,1790\, w^{0,7171}$

$f_1(b) = 0,6840 - 0,0077\, b + 0,1473\, b^2$

$f(r_H) = 0,2081\, r_H^{-0,5231}$

$f(d_G) = 0,9993 + 0,27\, d_G - 1,0211\, d_G^2 + 0,5306\, d_G^3$

$f(d_H) = 0,9978 + 0,3145\, d_H - 1,5241\, d_H^2 + 2,4147\, d_H^3$

$f(recess) = 1 + (t_H + t_G)\,(1,8 + 3,2\, s)$

b) The stress concentration factor for torsion α_T is equal to:

$\alpha_T = 0,8 \cdot f(r_H,s) \cdot f_2(b) \cdot f_2(w)$

where:

$f(r_H,s) = r_H^x$ with $x = -0,322 + 0,1015\,(1 - s)$

$f_2(b) = 7,8955 - 10,654\, b + 5,3482\, b^2 - 0,857\, b^3$

$f_2(w) = w^{-0,145}$

3.1.3 Journal fillet (not applicable to semi-built crankshaft)

a) The stress concentration factor for bending β_B is equal to:

$\beta_B = 2,7146 \cdot f_B(s,w) \cdot f_B(w) \cdot f_B(b) \cdot f_B(r_G) \cdot f_B(d_G) \cdot f_B(d_H) \cdot f(recess)$

where:

$f_B(s,w) = -1,7625 + 2,9821\ w - 1,5276\ w^2 + (1 - s)\ (5,1169 - 5,8089\ w + 3,1391\ w^2) + (1 - s)^2\ (-2,1567 + 2,3297\ w - 1,2952\ w^2)$

$f_B(w) = 2,2422\ w^{0,7548}$

$f_B(b) = 0,5616 + 0,1197\ b + 0,1176\ b^2$

$f_B(r_G) = 0,1908\ r_G^{-0,5568}$

$f_B(d_G) = 1,0012 - 0,6441\ d_G + 1,2265\ d_G^2$

$f_B(d_H) = 1,0022 - 0,1903\ d_H + 0,0073\ d_H^2$

f(recess) : As defined in [3.1.2], item a).

b) The stress concentration factor for compression β_Q due to the radial force is equal to:

$\beta_Q = 3,0128 \cdot f_Q(s) \cdot f_Q(w) \cdot f_Q(b) \cdot f_Q(r_G) \cdot f_Q(d_H) \cdot f(recess)$

where:

$f_Q(s) = 0,4368 + 2,1630\ (1 - s) - 1,5212\ (1 - s)^2$

$$f_Q(w) = \frac{w}{0,0637 + 0,9369w}$$

$f_Q(b) = -0,5 + b$

$f_Q(r_G) = 0,5331\ r_G^{-0,2038}$

$f_Q(d_H) = 0,9937 - 1,1949\ d_H + 1,7373\ d_H^2$

f(recess) : As defined in [3.1.2], item a).

c) The stress concentration factor for torsion β_T is equal to:

- if $D = D_G$ and $R_H = R_G$:

  $\beta_T = \alpha_T$

- if $D \neq D_G$ and/or $R_H \neq R_G$:

  $\beta_T = 0,8 \cdot f(r_H,s) \cdot f_2(b) \cdot f_2(w)$

  with $f(r_H,s)$, $f_2(b)$ and $f_2(w)$ determined in accordance with [3.1.2], item b), but taking $r_H = R_G / D_G$ instead of $r_H = R_H / D$ for the calculation of $f(r_H,s)$.

3.1.4 Outlet of crankpin oil bore

The stress concentration factors for bending γ_B and for torsion γ_T are equal to:

$\gamma_B = 3 - 5,88\ d_o + 34,6\ d_o^2$

$\gamma_T = 4 - 6\ d_o + 30\ d_o^2$

4 Additional bending stresses

4.1 General

4.1.1 In addition to the alternating bending stresses in fillets (see [2.1.3]), further bending stresses due to misalignment and bedplate deformation as well as due to axial and bending vibrations are to be considered, applying σ_{add} as given in Tab 2.

It is recommended that a value of ± 20 N/mm² be used for the axial vibration component for assessment purposes where axial vibration calculation results of the complete dynamic system (engine/shafting/gearing/propeller) are not available. Where axial vibration calculation results of the complete dynamic system are available, the calculated values may be used instead.

Table 2 : Additional bending stress σ_{add}

Type of engine	σ_{add}, in N/mm²
Crosshead engine	± 30 **(1)**
Trunk piston engine	± 10
(1) The additional stress of ± 30 N/mm² is composed of two components: • an additional stress of ± 20 N/mm² resulting from axial vibration • an additional stress of ± 10 N/mm² resulting from misalignment/bedplate deformation.	

5 Calculation of equivalent alternating stress

5.1 General

5.1.1 In the fillets, bending and torsion lead to two different biaxial stress fields which can be represented by a von Mises equivalent stress with the additional assumptions that bending and torsion stresses are time-phased and the corresponding peak values occur at the same location.

As a result, the equivalent alternating stress is to be calculated for the crankpin fillet as well as for the journal fillet, using von Mises criterion.

At the oil hole outlet, bending and torsion lead to two different stress fields which can be represented by an equivalent principal stress equal to the maximum of principal stress resulting from combination of these two stress fields with the assumption that bending and torsion are time-phased.

The above two different ways of equivalent stress evaluation both lead to stresses which may be compared to the same fatigue strength value of crankshaft assessed according to von Mises criterion.

5.2 Equivalent alternating stresses

5.2.1 The equivalent alternating stresses, in N/mm², are calculated according to the following formulae:

a) equivalent alternating stress σ'_V in way of crankpin fillet:

$$\sigma'_V = \pm\sqrt{(\sigma_{BH} + \sigma_{add})^2 + 3\tau_H^2}$$

b) equivalent alternating stress σ''_V in way of journal fillet:

$$\sigma''_V = \pm\sqrt{(\sigma_{BG} + \sigma_{add})^2 + 3\tau_G^2}$$

c) equivalent alternating stress σ'''_V in way of outlet of crankpin oil bore:

$$\sigma'''_V = \pm\frac{1}{3}\sigma_{BO}\left[1 + 2\sqrt{1 + \frac{9}{4}\left(\frac{\sigma_{TO}}{\sigma_{BO}}\right)^2}\right]$$

6 Calculation of fatigue strength

6.1 General

6.1.1 The fatigue strength is to be understood as that value of von Mises equivalent alternating stress which a crankshaft can permanently withstand at the most highly stressed points.

The fatigue strength may be evaluated by means of the following formulae:

a) allowable alternating bending fatigue strength of crankshaft σ'_{DW}, in N/mm², in the crankpin fillet area:

$$\sigma'_{DW} = \pm KR'_m\left(0{,}264 + \frac{1{,}073}{D^{0,2}} + \frac{785 - R_m}{4900} + \frac{196}{R_m}\sqrt{\frac{1}{R_H}}\right)$$

b) allowable alternating bending fatigue strength of crankshaft σ''_{DW}, in N/mm², in the journal fillet area:

$$\sigma''_{DW} = \pm KR'_m\left(0{,}264 + \frac{1{,}073}{D_G^{0,2}} + \frac{785 - R_m}{4900} + \frac{196}{R_m}\sqrt{\frac{1}{R_G}}\right)$$

c) allowable alternating bending fatigue strength of crankshaft σ'''_{DW}, in N/mm², in the crankpin oil bore area:

$$\sigma'''_{DW} = \pm KR'_m\left(0{,}264 + \frac{1{,}073}{D^{0,2}} + \frac{785 - R_m}{4900} + \frac{196}{R_m}\sqrt{\frac{2}{D_O}}\right)$$

where:

K : Factor equal to:

- for different types of crankshafts without surface treatment (values greater than 1,00 are only applicable to fatigue strength in fillet area):
  - K = 1,05 for continuous grain flow forged or drop-forged crankshafts
  - K = 1,00 for free form forged crankshafts (without continuous grain flow)
- for cast steel crankshafts with cold rolling treatment in fillet area:
  - K = 0,93 for cast steel crankshafts manufactured by companies using a cold rolling process approved by the Society

$R'_m = 0{,}42\ R_m + 39{,}3$

When a surface treatment process is applied, it is to be approved by the Society. Guidance for calculation of surface treated fillets and oil bore outlets is presented in Article [11].

These formulae are subject to the following conditions:

- surfaces of the fillet, the outlet of the oil bore and inside the oil bore (down to a minimum depth equal to 1,5 times the oil bore diameter) are to be smoothly finished
- for calculation of σ'_{DW}, σ''_{DW} and σ'''_{DW}, the values of R_G, R_H and $D_O/2$ are to be taken as not less than 2 mm.

As an alternative, the fatigue strength of the crankshaft can be determined by experiment based either on full size crank throw (or crankshaft) or on specimens taken from a full size crank throw. For evaluation of test results, see Article [10].

7 Acceptability criteria

7.1

7.1.1 The sufficient dimensioning of a crankshaft is confirmed by a comparison of the equivalent alternating stress and the fatigue strength. This comparison has to be carried out for the crankpin fillet, the journal fillet, the outlet of crankpin oil bore and is based on the following acceptability factors Q_i:

$$Q_1 = \frac{\sigma'_{DW}}{\sigma'_V}$$

$$Q_2 = \frac{\sigma''_{DW}}{\sigma''_V}$$

$$Q_3 = \frac{\sigma'''_{DW}}{\sigma'''_V}$$

Adequate dimensioning of the crankshaft is ensured if these acceptability factors satisfy the criterion:

$Q_i \geq 1{,}15$ with i = 1 to 3

8 Calculation of shrink-fits of semi-built crankshaft

8.1 General

8.1.1 Respecting the radius of the transition R_G from the journal diameter D_G to the shrink diameter D_S, the following criterion is to be complied with:

$R_G \geq \text{Max}\,(0{,}015\,D_G\,;\,0{,}5\,(D_S - D_G))$

The actual oversize Z of the shrink-fit is to be within the limits Z_{min} and Z_{max} calculated in accordance with [8.3] and [8.4].

In the case where the condition in [8.2] cannot be fulfilled then calculation methods of Z_{min} and Z_{max} according to [8.3] and [8.4] are not applicable due to multizone-plasticity problems.

In such a case, Z_{min} and Z_{max} have to be established based on FEM calculations.

8.2 Maximum permissible hole in journal pin

8.2.1 The hole diameter in the journal pin D_{BG}, in mm, is to satisfy the following criterion:

$$D_{BG} \leq D_S \sqrt{1 - \frac{4000 \cdot S_R \cdot M_{max}}{\mu \cdot \pi \cdot D_S^2 \cdot L_S \cdot R_{SP}}}$$

where:

D_S, L_S	:	As defined in Symbols
S_R	:	Safety factor against slipping, however a value not less than 2 is to be taken unless documented by experiments
M_{max}	:	Absolute maximum value of the torque M_{Tmax} (see Symbols), in N·m
μ	:	Coefficient for static friction, however a value not greater than 0,2 is to be taken unless documented by experiments
R_{SP}	:	Minimum yield strength of material for journal pin, in N/mm².

This condition serves to avoid plasticity in the hole of the journal pin.

8.3 Necessary minimum oversize of shrink-fit

8.3.1 The necessary minimum oversize Z_{min} of the shrink-fit, in mm, is determined by the greater value calculated according to:

$$Z_{min} \geq \frac{R_{SW} \cdot D_S}{E_m}$$

and

$$Z_{min} \geq \frac{4000}{\pi \cdot \mu} \cdot \frac{S_R \cdot M_{max}}{E_m \cdot D_S \cdot L_S} \cdot \frac{1 - \left(\frac{D_S}{D_A}\right)^2 \cdot \left(\frac{D_{BG}}{D_S}\right)^2}{\left[1 - \left(\frac{D_S}{D_A}\right)^2\right] \cdot \left[1 - \left(\frac{D_{BG}}{D_S}\right)^2\right]}$$

where:

R_{SW} : Minimum yield strength of material for crank web, in N/mm²

E_m : Young's modulus of material for crank web, in N/mm²

μ, S_R, M_{max} : As defined in [8.2.1].

8.4 Maximum permissible oversize of shrink-fit

8.4.1 The maximum permissible oversize Z_{max} of the shrink-fit, in mm, is calculated according to:

$$Z_{max} \leq \frac{R_{SW} \cdot D_S}{E_m} + \frac{0{,}8 D_S}{1000}$$

where:

R_{SW}, D_S, E_m : As defined in [8.3.1].

This condition concerning the maximum permissible oversize serves to restrict the shrinkage induced mean stress in the journal fillet.

9 Guidance for calculation of stress concentration factors in the web fillet radii of crankshafts by utilizing FEM

9.1 General

9.1.1 The objective of the analysis is to develop Finite Element Method (FEM) calculated figures as an alternative to the analytically calculated stress concentration factors (SCF) at the crankshaft fillets. The analytical method is based on empirical formulae developed from strain gauge measurements of various crank geometries and accordingly the application of these formulae is limited to those geometries.

The SCFs calculated according to this Appendix are defined as the ratio of stresses calculated by FEM to nominal stresses in both journal and pin fillets. When used in connection with the method of the present Article [9] or with the alternative methods, von Mises stresses shall be calculated for bending and principal stresses for torsion.

The procedure, as well as evaluation guidelines, are valid for both solid cranks and semi-built cranks (except journal fillets).

The analysis is to be conducted as linear elastic FE analysis, and unit loads of appropriate magnitude are to be applied for all load cases.

The calculation of SCF at the oil bores is not covered by this Appendix.

It is advised to check the element accuracy of the FE solver in use, e.g. by modeling a simple geometry and comparing the stresses obtained by FEM with the analytical solution for pure bending and torsion.

Boundary Element Method (BEM) may be used instead of FEM.

9.2 Model requirements

9.2.1 The basic recommendations and perceptions for building the FE-model are presented in [9.2.2]. It is obligatory for the final FE-model to fulfill the requirement in [9.2.4].

9.2.2 Element mesh recommendations

In order to fulfil the mesh quality criteria it is advised to construct the FE model for the evaluation of Stress Concentration Factors according to the following recommendations:

a) The model consists of one complete crank, from the main bearing centreline to the opposite side main bearing centreline.

b) Element types used in the vicinity of the fillets:
   - 10 node tetrahedral elements
   - 8 node hexahedral elements
   - 20 node hexahedral elements.

c) Mesh properties in fillet radii

   The following applies to ±90 degrees in circumferential direction from the crank plane:
   - Maximum element size a = r / 4 through the entire fillet as well as in the circumferential direction.

     When using 20 node hexahedral elements, the element size in the circumferential direction may be extended up to 5 a.

     In the case of multi-radii fillet, r is the local fillet radius.

     If 8 node hexahedral elements are used even smaller element size is required to meet the quality criteria.

- Recommended manner for element size in fillet depth direction:
  - 1rst layer thickness equal to element size of a
  - 2nd layer thickness equal to element size of 2 a
  - 3rd layer thickness equal to element size of 3 a
- Minimum 6 elements across web thickness

d) Generally the rest of the crank should be suitable for numeric stability of the solver

e) Counterweights have to be modeled only when influencing the global stiffness of the crank significantly

f) Modeling of oil drillings is not necessary as long as the influence on global stiffness is negligible and the proximity to the fillet is more than 2 r (see Fig 6)

g) Drillings and holes for weight reduction have to be modeled

h) Sub-modeling may be used as far as the software requirements are fulfilled.

Figure 6 : Oil bore proximity to fillet

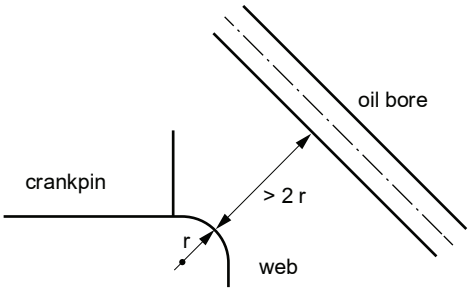

9.2.3 Material

The present Appendix does not consider material properties such as Young's Modulus (E) and Poisson's ratio (ν). In FE analysis, those material parameters are required, as strain is primarily calculated and stress is derived from strain using the Young's Modulus and Poisson's ratio.

Reliable values for material parameters have to be used, either as quoted in literature or as measured on representative material samples.

For steel, the following values are advised:

$E = 2{,}05\ 10^5$ MPa and $\nu = 0{,}3$

9.2.4 Element mesh quality criteria

If the actual element mesh does not fulfil any of the following criteria at the examined area for SCF evaluation, then a second calculation with a refined mesh is to be performed:

- Principal stress criterion

  The quality of the mesh should be assured by checking the stress component normal to the surface of the fillet radius. Ideally, this stress should be zero. With principal stresses σ_1, σ_2 and σ_3, the following criterion is required:

  $\text{Min}\ (|\sigma_1|\ ;\ |\sigma_2|\ ;\ |\sigma_3|) < 0{,}03\ \text{Max}\ (|\sigma_1|\ ;\ |\sigma_2|\ ;\ |\sigma_3|)$
- Averaged / unaveraged stress criterion

  The criterion is based on observing the discontinuity of stress results over elements at the fillet for the calculation of SCF.

  Unaveraged nodal stress results calculated from each element connected to a node i should differ less than by 5% from the 100% averaged nodal stress results at this node i at the examined location.

9.3 Load cases

9.3.1 To substitute the analytically determined SCF in this Appendix, the following load cases have to be calculated.

9.3.2 Torsion

In analogy to the testing apparatus used for the investigations made by FVV, the structure is loaded in pure torsion. In the model, surface warp at the end faces is suppressed.

Torque is applied to the central node located at the crankshaft axis. This node acts as the master node with 6 degrees of freedom and is connected rigidly to all nodes of the end face.

Boundary and load conditions (see Fig 7) are valid for both in-line and V-type engines.

For all nodes in both the journal and crank pin fillets, principal stresses are extracted and the equivalent torsional stress τ_{equiv} is calculated:

$$\tau_{equiv} = \text{Max}\left(\frac{|\sigma_1 - \sigma_2|}{2}\ ;\ \frac{|\sigma_2 - \sigma_3|}{2}\ ;\ \frac{|\sigma_1 - \sigma_3|}{2}\right)$$

The maximum value for crankpin fillet $\tau_{equiv,\alpha}$ and for journal fillet $\tau_{equiv,\beta}$ is used for the subsequent calculation of the SCF α_T and β_T :

$$\alpha_T = \frac{\tau_{equiv,\alpha}}{\tau_{NH}}$$

$$\beta_T = \frac{\tau_{equiv,\beta}}{\tau_{NG}}$$

where:

τ_{NH} , τ_{NG} : Nominal torsional stresses, in N/mm², referred to the crankpin and the journal, respectively, and calculated as per [2.2.2] with the torsional torque T (see Fig 7):

$$\tau_{NH} = \pm \frac{T}{W_{PH}} \cdot 10^3$$

$$\tau_{NG} = \pm \frac{T}{W_{PG}} \cdot 10^3$$

Figure 7 : Boundary and load conditions for the torsion load case

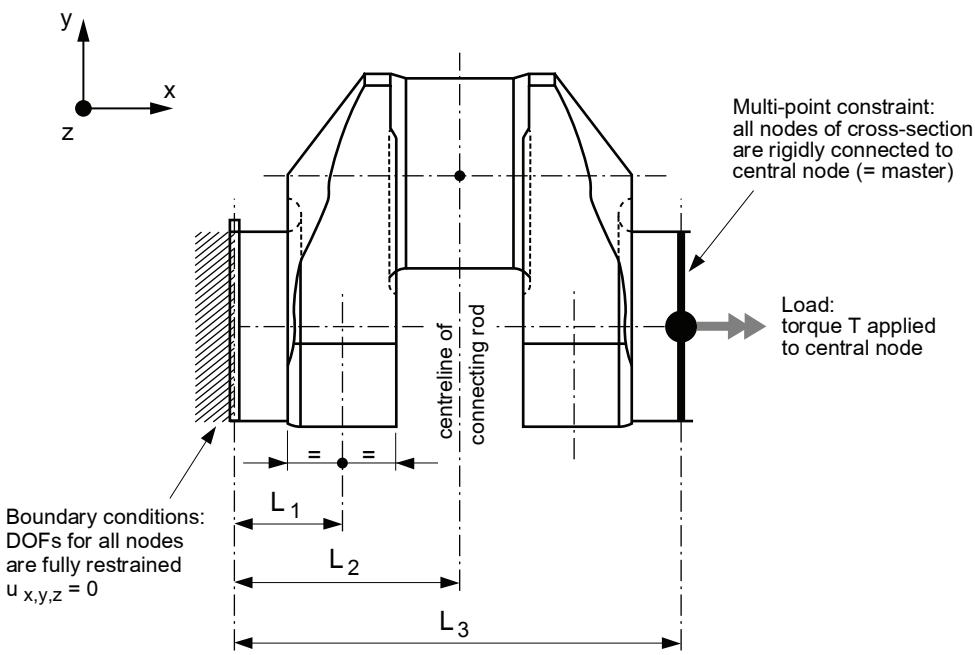

9.3.3 Pure bending (4-point bending)

In analogy to the testing apparatus used for the investigations made by FVV, the structure is loaded in pure bending. In the model, surface warp at the end faces is suppressed.

The bending moment is applied to the central node located at the crankshaft axis. This node acts as the master node with 6 degrees of freedom and is connected rigidly to all nodes of the end face.

Boundary and load conditions (see Fig 8) are valid for both in-line- and V- type engines.

For all nodes in both the journal and crankpin fillets, von Mises equivalent stresses σ_{equiv} are extracted.

The maximum value for crankpin fillet $\sigma_{equiv,\alpha}$ and for journal fillet $\sigma_{equiv,\beta}$ is used for the subsequent calculation of the SCF α_B and β_B:

$$\alpha_B = \frac{\sigma_{equiv,\alpha}}{\sigma_N}$$

$$\beta_B = \frac{\sigma_{equiv,\beta}}{\sigma_N}$$

where:

σ_N : Nominal bending stress, in N/mm², related to the web cross-section and calculated as per [2.1.2] item b) with the bending moment M (see Fig 8):

$$\tau_N = \pm \frac{M}{W_{eqw}} \cdot 10^3$$

Figure 8 : Boundary and load conditions for the pure bending load case

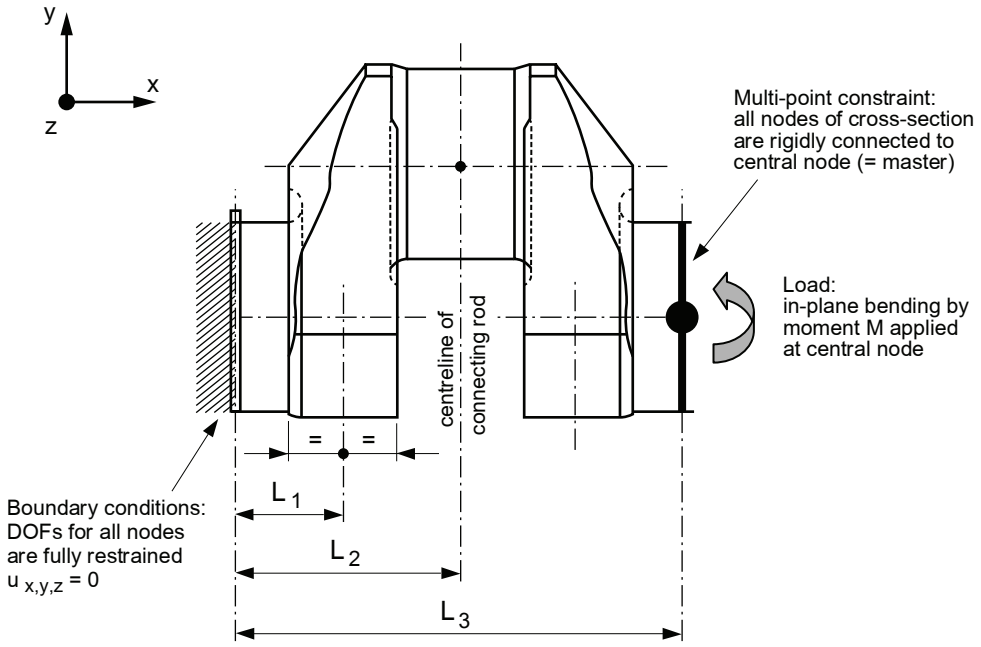

9.3.4 Bending with shear force (3-point bending)

This load case is calculated to determine the SCF for pure transverse force (radial force, β_Q) for the journal fillet.

In analogy to the testing apparatus used for the investigations made by FVV, the structure is loaded in 3-point bending. In the model, surface warp at the both end faces is suppressed.

All nodes are connected rigidly to the central node; boundary conditions are applied to the central nodes. These nodes act as master nodes with 6 degrees of freedom.

The force is applied to the central node located at the pin centreline of the connecting rod. This node is connected to all nodes of the pin cross-sectional area. Warping of the sectional area is not suppressed.

Boundary and load conditions are valid for in-line engines (see Fig 9) and V-type engines. V-type engines can be modeled with one connecting rod force only. Using two connecting rod forces will make no significant change in the SCF.

Figure 9 : Boundary and load conditions for the 3-point bending load case of an in-line engine

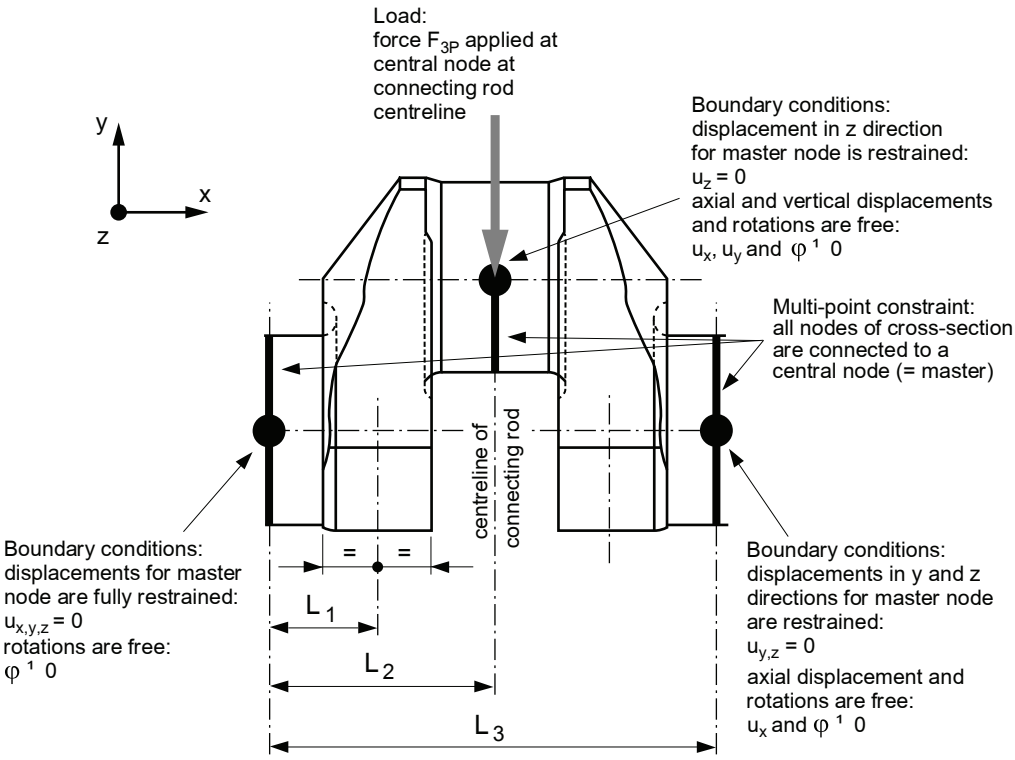

The maximum equivalent von Mises stress σ_{3P} in the journal fillet is evaluated. The SCF in the journal fillet can be determined with one of the two following methods:

a) Method 1

This method is analogue to the FVV investigation. The results from 3-point and 4-point bending are combined as follows:

$$\sigma_{3P} = \sigma_{N3P}\,\beta_B + \sigma_{Q3P}\,\beta_Q$$

where:

σ_{3P} : As found by the FE calculation

σ_{N3P} : Nominal bending stress in the web centre due to the force F_{3P}, in N, applied to the centreline of the actual connecting rod (see Fig 10)

β_B : SCF as determined in [9.3.3]

$$\sigma_{Q3P} = \frac{Q_{3P}}{BW}$$

with:

Q_{3P} : Radial (shear) force in the web due to the force F_{3P}, in N, applied to the centreline of the actual connecting rod (see also Fig 2).

b) Method 2

This method is not analogous to the FVV investigation. In a statically determined system with one crank throw supported by two bearings, the bending moment and radial (shear) force are proportional. Therefore the SCF in the journal fillet can be found directly by the 3-point bending FE calculation.

The SCF is then calculated according to:

$$\beta_{BQ} = \frac{\sigma_{3P}}{\sigma_{N3P}}$$

where:

σ_{3P}, σ_{N3P}: As defined in item a) above.

When using this method, the radial force and stress determination in this Appendix becomes superfluous. The alternating bending stress in the journal fillet as per [2.1.3] is then evaluated:

$$\sigma_{BG} = \pm\,|\beta_{BQ} \cdot \sigma_{BFN}|$$

Note 1: The use of this method does not apply to the crankpin fillet and this SCF must not be used in connection with calculation methods other than those assuming a statically determined system as in this Appendix.

Figure 10 : Load applications for in-line and V-type engines

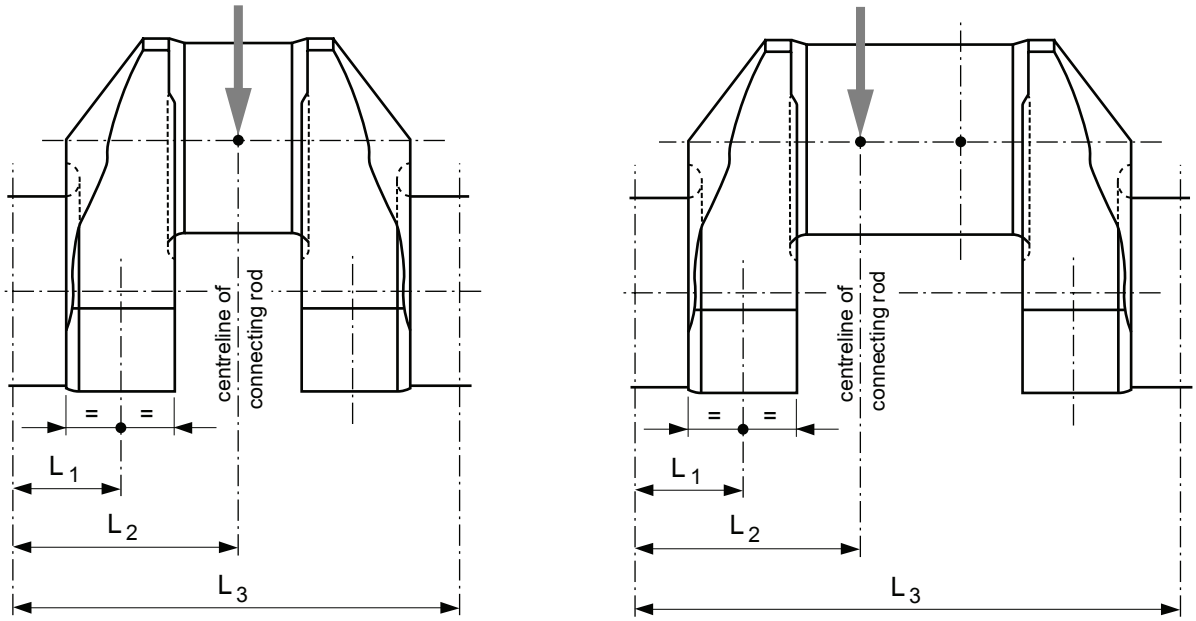

10 Guidance for evaluation of fatigue tests

10.1 Introduction

10.1.1 Fatigue testing can be divided into two main groups; testing of small specimens and full-size crank throws. Testing can be made using the staircase method or a modified version thereof which is presented in this document. Other statistical evaluation methods may also be applied.

10.1.2 Small specimen testing

For crankshafts without any fillet surface treatment, the fatigue strength can be determined by testing small specimens taken from a full-size crank throw. When other areas in the vicinity of the fillets are surface treated introducing residual stresses in the fillets, this approach cannot be applied.

One advantage of this approach is the rather high number of specimens which can be then manufactured. Another advantage is that the tests can be made with different stress ratios (R-ratios) and/or different modes e.g. axial, bending and torsion, with or without a notch. This is required for evaluation of the material data to be used with critical plane criteria.

10.1.3 Full-size crank throw testing

For crankshafts with surface treatment the fatigue strength can only be determined through testing of full size crank throws. For cost reasons, this usually means a low number of crank throws. The load can be applied by hydraulic actuators in a 3 or 4 point bending arrangement, or by an exciter in a resonance test rig. The latter is frequently used, although it usually limits the stress ratio to R = –1.

10.2 Evaluation of test results

10.2.1 Principles

Prior to fatigue testing the crankshaft must be tested as required by quality control procedures, e.g. for chemical composition, mechanical properties, surface hardness, hardness depth and extension, fillet surface finish, etc.

The test samples should be prepared so as to represent the “lower end” of the acceptance range e.g. for induction hardened crankshafts this means the lower range of acceptable hardness depth, the shortest extension through a fillet, etc. Otherwise the mean value test results should be corrected with a confidence interval: a 90% confidence interval may be used both for the sample mean and the standard deviation.

The test results, when applied in this Appendix, shall be evaluated to represent the mean fatigue strength, with or without taking into consideration the 90% confidence interval as mentioned above. The standard deviation should be considered by taking the 90% confidence into account. Subsequently the result to be used as the fatigue strength is then the mean fatigue strength minus one standard deviation.

If the evaluation aims to find a relationship between (static) mechanical properties and the fatigue strength, the relation must be based on the real (measured) mechanical properties, not on the specified minimum properties.

The calculation technique presented in [10.2.4] was developed for the original staircase method. However, since there is no similar method dedicated to the modified staircase method the same is applied for both.

10.2.2 Staircase method

In the original staircase method, the first specimen is subjected to a stress corresponding to the expected average fatigue strength. If the specimen survives 10^7 cycles, it is discarded and the next specimen is subjected to a stress that is one increment above the previous, i.e. a survivor is always followed by the next using a stress one increment above the previous. The increment should be selected to correspond to the expected level of the standard deviation.

When a specimen fails prior to reaching 10^7 cycles, the obtained number of cycles is noted and the next specimen is subjected to a stress that is one increment below the previous. With this approach, the sum of failures and run-outs is equal to the number of specimens.

This original staircase method is only suitable when a high number of specimens are available. Through simulations it has been found that the use of about 25 specimens in a staircase test leads to a sufficient accuracy in the result.

10.2.3 Modified staircase method

When a limited number of specimens are available, it is advisable to apply the modified staircase method. Here the first specimen is subjected to a stress level that is most likely well below the average fatigue strength. When this specimen has survived 10^7 cycles, this same specimen is subjected to a stress level one increment above the previous. The increment should be selected to correspond to the expected level of the standard deviation. This is continued with the same specimen until failure.

Then the number of cycles is recorded and the next specimen is subjected to a stress that is at least 2 increments below the level where the previous specimen failed.

With this approach, the number of failures usually equals the number of specimens. The number of run-outs, counted as the highest level where 10^7 cycles were reached, also equals the number of specimens.

The acquired result of a modified staircase method should be used with care, since some results available indicate that testing a runout on a higher test level, especially at high mean stresses, tends to increase the fatigue limit. However, this "training effect" is less pronounced for high strength steels (e.g. UTS > 800 MPa).

If the confidence calculation is desired or necessary, the minimum number of test specimens is 3.

10.2.4 Calculation of sample mean and standard deviation

A hypothetical example of tests for 5 crank throws is presented further in the subsequent text. When using the modified staircase method and the evaluation method of Dixon and Mood, the number of samples will be 10, meaning 5 run-outs and 5 failures, i.e.:

- Number of samples:

  n = 10

Furthermore, the method distinguishes between:

- Less frequent event is failures:

  C = 1

- Less frequent event is run-outs:

  C = 2

The method uses only the less frequent occurrence in the test results, i.e. if there are more failures than run-outs, then the number of run-outs is used, and vice versa.

In the modified staircase method, the number of run-outs and failures are usually equal. However, the testing can be unsuccessful, e.g. the number of run-outs can be less than the number of failures if a specimen with 2 increments below the previous failure level goes directly to failure. On the other hand, if this unexpected premature failure occurs after a rather high number of cycles, it is possible to define the level below this as a run-out.

Dixon and Mood's approach, derived from the maximum likelihood theory, which also may be applied here, especially on tests with few samples, presented some simple approximate equations for calculating the sample mean and the standard deviation from the outcome of the staircase test. The sample mean can be calculated as follows:

$$\overline{S_a} = S_{a0} + d\left(\frac{A}{F} - \frac{1}{2}\right) \qquad \text{when} \qquad C = 1$$

$$\overline{S_a} = S_{a0} + d\left(\frac{A}{F} + \frac{1}{2}\right) \qquad \text{when} \qquad C = 2$$

The standard deviation can be found by:

$$s = 1,62\,d\left(\frac{FB - A^2}{F^2} + 0,029\right)$$

where:

S_{aO} : Lowest stress level for the less frequent occurrence

d : Stress increment

$F = \Sigma\, fi$

$A = \Sigma i\, fi$

$B = \Sigma i^2\, fi$

i : Stress level numbering

fi : Number of samples at stress level i.

The formula for the standard deviation is an approximation and can be used when:

$$\frac{BF - A^2}{F^2} > 0,3 \qquad \text{and} \qquad 0,5s < d < 1,5s$$

If any of these two conditions are not fulfilled, a new staircase test should be considered or the standard deviation should be taken quite large in order to be on the safe side.

If increment d is greatly higher than the standard deviation s, the procedure leads to a lower standard deviation and a slightly higher sample mean, both compared to values calculated when the difference between the increment and the standard deviation is relatively small. Respectively, if increment d is much less than the standard deviation s, the procedure leads to a higher standard deviation and a slightly lower sample mean.

10.2.5 Confidence interval for mean fatigue limit

If the staircase fatigue test is repeated, the sample mean and the standard deviation will most likely be different from the previous test. Therefore, it is necessary to assure with a given confidence that the repeated test values will be above the chosen fatigue limit by using a confidence interval for the sample mean.

The confidence interval for the sample mean value with unknown variance is known to be distributed according to the t-distribution (also called student's t-distribution) which is a distribution symmetric around the average.

Note 1: The confidence level normally used for the sample mean is 90%, meaning that 90% of sample means from repeated tests will be above the value calculated with the chosen confidence level. Fig 11 shows the t value for (1 – α) 100% confidence interval for the sample mean.

Figure 11 : Student's t-distribution

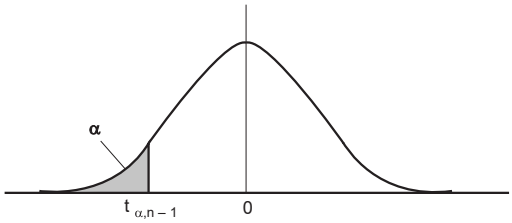

If S_a is the empirical mean and s is the empirical standard deviation over a series of n samples, in which the variable values are normally distributed with an unknown sample mean and unknown variance, the (1 – α) 100% confidence interval for the mean is:

$$P\left(S_a - t_{\alpha,\,n-1}\frac{s}{\sqrt{n}} < S_{aX\%}\right) = 1 - a$$

The resulting confidence interval is symmetric around the empirical mean of the sample values, and the lower endpoint can be found as:

$$S_{aX\%} = S_a - t_{\alpha,\,n-1}\frac{s}{\sqrt{n}}$$

which is the mean fatigue limit (population value) to be used to obtain the reduced fatigue limit where the limits for the probability of failure are taken into consideration.

10.2.6 Confidence interval for standard deviation

The confidence interval for the variance of a normal random variable is known to possess a chi-square distribution with n – 1 degrees of freedom.

Note 1: The confidence level on the standard deviation is used to ensure that the standard deviations for repeated tests are below an upper limit obtained from the fatigue test standard deviation with a confidence level. Fig 12 shows the chi-square for (1 – α) 100% confidence interval for the variance.

Figure 12 : Chi-square distribution

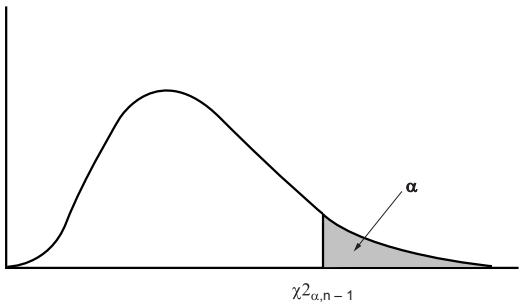

An assumed fatigue test value from n samples is a normal random variable with a variance of σ^2 and has an empirical variance α^2. Then a (1 – α) 100% confidence interval for the variance is:

$$P\left(\frac{(n-1)s^2}{\sigma^2} < \chi^2_{a,\,n-1}\right) = 1 - \alpha$$

A (1 – α) 100% confidence interval for the standard deviation is obtained by the square root of the upper limit of the confidence interval for the variance and can be found by:

$$s_{\chi\%} = \sqrt{\frac{n-1}{\chi^2_{a,\,n-1}}}\,s$$

This standard deviation (population value) is to be used to obtain the fatigue limit, where the limits for the probability of failure are taken into consideration.

10.3 Small specimen testing

10.3.1 In this connection, a small specimen is considered to be one of the specimens taken from a crank throw. Since the specimens shall be representative for the fillet fatigue strength, they should be taken out close to the fillets, as shown in Fig 13.

It should be made certain that the principal stress direction in the specimen testing is equivalent to the full-size crank throw. The verification is recommended to be done by utilizing the finite element method.

The (static) mechanical properties are to be determined as stipulated by the quality control procedures.

10.3.2 Determination of bending fatigue strength

It is advisable to use un-notched specimens in order to avoid uncertainties related to the stress gradient influence. Push-pull testing method (stress ratio R = -1) is preferred, but especially for the purpose of critical plane criteria other stress ratios and methods may be added.

In order to ensure principal stress direction in push-pull testing to represent the full-size crank throw principal stress direction and when no further information is available, the specimen shall be taken in 45 degrees angle as shown in Fig 13.

a) If the objective of the testing is to document the influence of high cleanliness, test samples taken from positions approximately 120 degrees in a circumferential direction may be used. See Fig 13.

b) If the objective of the testing is to document the influence of continuous grain flow (cgf) forging, the specimens should be restricted to the vicinity of the crank plane.

Figure 13 : Specimen locations in a crank throw

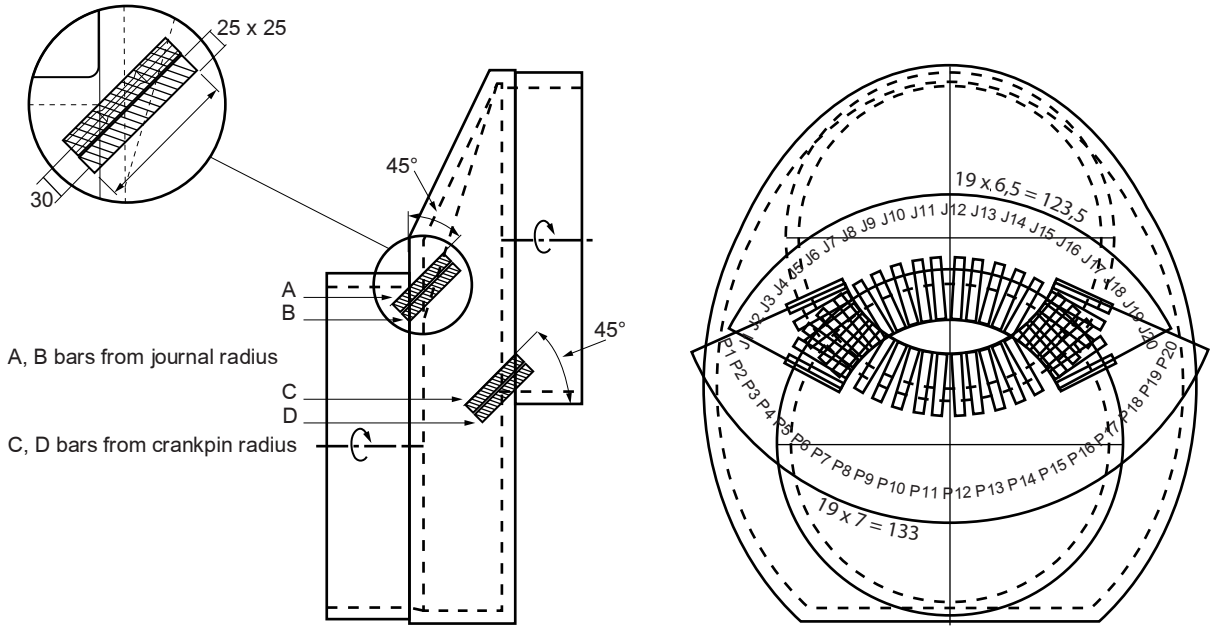

10.3.3 Determination of torsional fatigue strength

a) If the specimens are subjected to torsional testing, the selection of samples should follow the same guidelines as for bending above. The stress gradient influence has to be considered in the evaluation.

b) If the specimens are tested in push-pull and no further information is available, the samples should be taken out at an angle of 45 degrees to the crank plane in order to ensure collinearity of the principal stress direction between the specimen and the full size crank throw. When taking the specimen at a distance from the (crank) middle plane of the crankshaft along the fillet, this plane rotates around the pin centre point making it possible to resample the fracture direction due to torsion (the results are to be converted into the pertinent torsional values).

10.3.4 Other test positions

If the test purpose is to find fatigue properties and the crankshaft is forged in a manner likely to lead to cgf, the specimens may also be taken longitudinally from a prolonged shaft piece where specimens for mechanical testing are usually taken. The condition is that this prolonged shaft piece is heat treated as a part of the crankshaft and that the size is so as to result in a similar quenching rate as the crank throw.

When using test results from a prolonged shaft piece, it must be considered how well the grain flow in that shaft piece is representative for the crank fillets.

10.3.5 Correlation of test results

The fatigue strength achieved by specimen testing shall be converted to correspond to the full-size crankshaft fatigue strength with an appropriate method (size effect).

When using the bending fatigue properties from tests mentioned in this section, it should be kept in mind that successful continuous grain flow (cgf) forging leading to elevated values compared to other (non cgf) forging, will normally not lead to a torsional fatigue strength improvement of the same magnitude.

In such cases it is advised to either carry out also torsional testing or to make a conservative assessment of the torsional fatigue strength, e.g. by using no credit for cgf. This approach is applicable when using the Gough Pollard criterion. However, this approach is not recognized when using the von Mises or a multi-axial criterion such as Findley.

If the found ratio between bending and torsion fatigue differs significantly from$3^{1/2}$, one should consider replacing the use of the von Mises criterion with the Gough Pollard criterion. Also, if critical plane criteria are used, it must be kept in mind that cgf makes the material inhomogeneous in terms of fatigue strength, meaning that the material parameters differ with the directions of the planes.

Any addition of influence factors must be made with caution. If for example a certain addition for clean steel is documented, it may not necessarily be fully combined with a K-factor for cgf. Direct testing of samples from a clean and cgf forged crank is preferred.

10.4 Full size testing

10.4.1 Hydraulic pulsation

A hydraulic test rig can be arranged for testing a crankshaft in 3-point or 4-point bending as well as in torsion. This allows for testing with any R-ratio.

Although the applied load should be verified by strain gauge measurements on plain shaft sections for the initiation of the test, it is not necessarily used during the test for controlling load. It is also pertinent to check fillet stresses with strain gauge chains.

Furthermore, it is important that the test rig provides boundary conditions as defined in [9.3.2] to [9.3.4]).

The (static) mechanical properties are to be determined as stipulated by the quality control procedures.

10.4.2 Resonance tester

A rig for bending fatigue normally works with an R-ratio of –1. Due to operation close to resonance, the energy consumption is moderate. Moreover, the frequency is usually relatively high, meaning that 10^7 cycles can be reached within some days. Fig 14 shows a layout of the testing arrangement.

Figure 14 : An example of testing arrangement of the resonance tester for bending loading

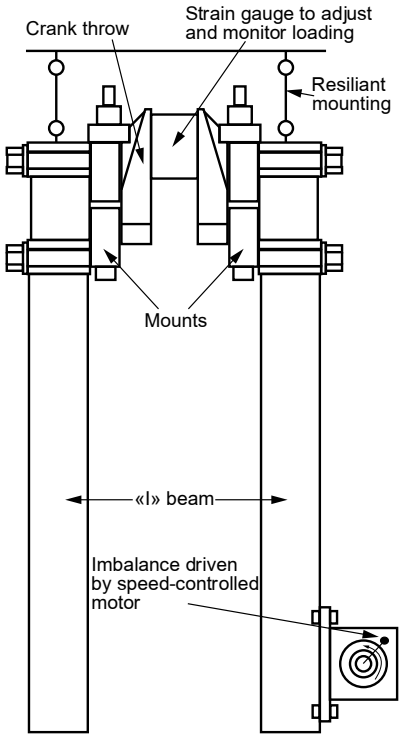

The applied load should be verified by strain gauge measurements on plain shaft sections. It is also pertinent to check fillet stresses with strain gauge chains.

Clamping around the journals must be arranged in a way that prevents severe fretting which could lead to a failure under the edges of the clamps. If some distance between the clamps and the journal fillets is provided, the loading is consistent with 4-point bending and thus representative for the journal fillets also.

In an engine, the crankpin fillets normally operate with an R-ratio slightly above –1 and the journal fillets slightly below –1. If found necessary, it is possible to introduce a mean load (deviate from R = –1) by means of a spring preload.

A rig for torsion fatigue can also be arranged as shown in Fig 15. When a crank throw is subjected to torsion, the twist of the crankpin makes the journals move sideways. If one single crank throw is tested in a torsion resonance test rig, the journals with their clamped-on weights will vibrate heavily sideways.

Figure 15 : An example of testing arrangement of the resonance tester for torsion loading with double crank throw section

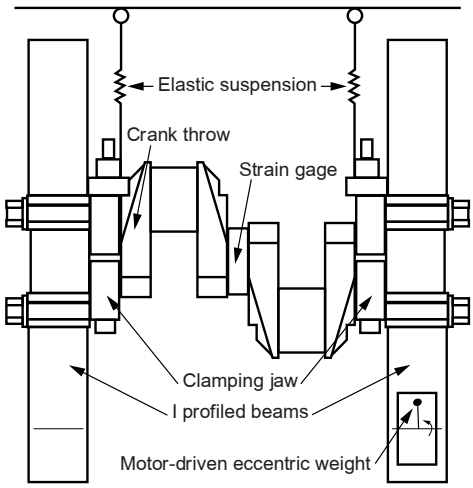

This sideway movement of the clamped-on weights can be reduced by having two crank throws, especially if the cranks are almost in the same direction. However, the journal in the middle will move more.

Since sideway movements can cause some bending stresses, the plain portions of the crankpins should also be provided with strain gauge arranged to measure any possible bending that could have an influence on the test results.

Similarly, to the bending case the applied load shall be verified by strain gauge measurements on plain shaft sections. It is also pertinent to check fillet stresses with strain gauge chains as well.

10.4.3 Use of results and crankshaft acceptability

In order to combine tested bending and torsion fatigue strength results in calculation of crankshaft acceptability, (see Article [7]), the Gough-Pollard approach and the maximum principal equivalent stress formulation can be applied for the following cases:

- At the crankpin fillet:

$$Q = \left(\sqrt{\left(\frac{\sigma_{BH} + \sigma_{add}}{\sigma_{DWCT}}\right)^2 + \left(\frac{\tau_H}{\tau_{DWCT}}\right)^2}\right)^{-1}$$

where:

σ_{DWCT} : Fatigue strength by bending testing

τ_{DWCT} : Fatigue strength by torsion testing

σ_{BH} : as defined in [2.1.3]

τ_H : as defined in [2.2.3]

σ_{add} : as defined in [4].

- Related to the crankpin oil bore:

$$Q = \frac{\sigma_{DWOT}}{\sigma_v}$$

$$\sigma_v = \frac{1}{3}\sigma_{BO}\left[1 + 2\sqrt{1 + \frac{9}{4}\left(\frac{\sigma_{TO}}{\sigma_{BO}}\right)^2}\right]$$

σ_{DWOT} : Fatigue strength by means of largest principal strength from torsion testing.

- At the journal fillet:

$$Q = \left(\sqrt{\left(\frac{\sigma_{BG} + \sigma_{add}}{\sigma_{DWJT}}\right)^2 + \left(\frac{\tau_G}{\tau_{DWJT}}\right)^2}\right)^{-1}$$

σ_{DWJT} : Fatigue strength by bending testing

τ_{DWJT} : Fatigue strength by torsion testing.

σ_{BG} : as defined in [2.1.3]

τ_G : as defined in [2.2.3]

σ_{add} : as defined in [4].

In case increase in fatigue strength due to the surface treatment is considered to be similar between the above cases, it is sufficient to test only the most critical location according to the calculation where the surface treatment had not been taken into account.

10.5 Use of existing results for similar crankshafts

10.5.1 For fillets or oil bores without surface treatment, the fatigue properties found by testing may be used for similar crankshaft designs providing:

- Material:
  - Similar material type
  - Cleanliness on the same or better level
  - The same mechanical properties can be granted (size versus hardenability)
- Geometry:
  - Difference in the size effect of stress gradient is insignificant or it is considered
  - Principal stress direction is equivalent. See [10.3].
- Manufacturing:
  - Similar manufacturing process.

Induction hardened or gas nitrited crankshafts will suffer fatigue either at the surface or at thetransition to the core. The surface fatigue strength as determined by fatigue tests of full size cranks, may be used on an equal or similar design as the tested crankshaft when the fatigue initiation occurred at the surface. With the similar design, it is meant that a similar material type and surface hardness are used and the fillet radius and hardening depth are within approximately ± 30% of the tested crankshaft.

Fatigue initiation in the transition zone can be either subsurface, i.e. below the hard layer, or at the surface where the hardening ends. The fatigue strength at the transition to the core can be determined by fatigue tests as described above, provided that the fatigue initiation occurred at the transition to the core. Tests made with the core material only will not be representative since the tension residual stresses at the transition are lacking.

Note 1: The fatigue limit can decrease in the very high cycle domain with subsurface crack initiation due to trapped hydrogen that accumulates through diffusion around some internal defect functioning as an initiation point. In these cases, it would be appropriate to reduce the fatigue limit by some percent per decade of cycles beyond 10^7. Based on a publication by Yukitaka Murakami “Metal Fatigue: Effects of Small Defects and Non-metallic Inclusions” the reduction is suggested to be 5% per decade especially when the hydrogen content is considered to be high.

11 Guidance for calculation of surface treated fillets and oil bore outlets

11.1 Introduction

11.1.1 This Article deals with surface treated fillets and oil bore outlets. The various treatments are explained and some empirical formula are given for calculation purposes. Conservative empiricism has been applied intentionally, in order to be on the safe side from a calculation standpoint.

Note 1: Measurements or more specific knowledge should be used if available. However, in the case of a wide scatter (e.g. for residual stresses) the values should be chosen from the end of the range that would be on the safe side for calculation purposes.

11.2 Definition of surface treatment

11.2.1 “Surface treatment” is a term covering treatments such as thermal, chemical or mechanical operations, leading to inhomogeneous material properties such as hardness, chemistry or residual stresses from the surface to the core.

11.2.2 Surface treatment methods

Tab 3 covers possible treatment methods and how they influence the properties that are decisive for the fatigue strength.

It is important to note that since only induction hardening, nitriding, cold rolling and stroke peening are considered relevant for marine engines, other methods as well as combination of two or more of the above are not dealt with in this document. In addition, die quenching can be considered in the same way as induction hardening.

Table 3 : Surface treatment methods and the characteristics they affect.

Treatment method	Affecting		
	chemistry	hardness	residual stresses
Induction hardening	-	X	X
Nitriding	X	X	X
Case hardening	X	X	X
Die quenching (no temper)	-	X	X
Cold rolling	-	-	X
Stroke peening	-	-	X
Shot peening	-	-	X
Laser peening	-	-	X
Ball coining	-	-	X

11.3 Calculation principles

11.3.1 The basic principle is that the alternating working stresses shall be below the local fatigue strength (including the effect of surface treatment) wherein non-propagating cracks may occur, see also [11.6.2] for details. This is then divided by a certain safety factor. This applies through the entire fillet or oil bore contour as well as below the surface to a depth below the treatment-affected zone i.e. to cover the depth all the way to the core.

Consideration of the local fatigue strength shall include the influence of the local hardness, residual stress and mean working stress. The influence of the 'giga-cycle effect', especially for initiation of subsurface cracks, should be covered by the choice of safety margin.

It is of vital importance that the extension of hardening/peening in an area with concentrated stresses be duly considered. Any transition where the hardening/peening is ended is likely to have considerable tensile residual stresses.

This forms a 'weak spot' and is important if it coincides with an area of high stresses.

Alternating and mean working stresses must be known for the entire area of the stress concentration as well as to a depth of about 1,2 times the depth of the treatment. Fig 16 indicates this principle in the case of induction hardening. The base axis is either the depth (perpendicular to the surface) or along the fillet contour.

The acceptability criterion should be applied stepwise from the surface to the core as well as from the point of maximum stress concentration along the fillet surface contour to the web.

Figure 16 : Stresses as functions of depth, general principles

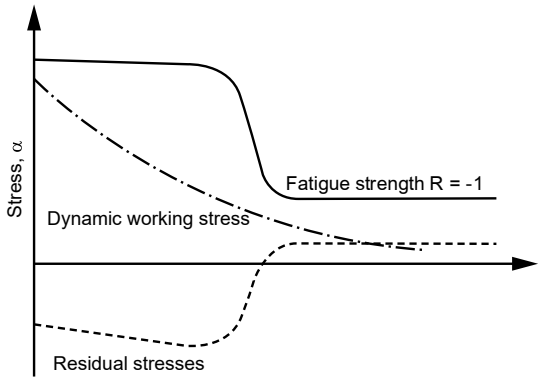

11.3.2 Evaluation of local fillet stresses

It is necessary to have knowledge of the stresses along the fillet contour as well as in the subsurface to a depth somewhat beyond the hardened layer. Normally this will be found via FEA as described in Article [9]. However, the element size in the subsurface range will have to be the same size as at the surface. For crankpin hardening only the small element size will have to be continued along the surface to the hard layer. If no FEA is available, a simplified approach may be used. This can be based on the empirically determined stress concentration factors (SCFs), as in Article [3] if within its validity range, and a relative stress gradient inversely proportional to the fillet radius. Bending and torsional stresses must be addressed separately. The combination of these is addressed by the acceptability criterion.

The subsurface transition-zone stresses, with the minimum hardening depth, can be determined by means of local stress concentration factors along an axis perpendicular to the fillet surface. These functions $\alpha_{B\text{-local}}$ and $\alpha_{T\text{-local}}$ have different shapes due to the different stress gradients.

The SCFs α_B and α_T are valid at the surface. The local $\alpha_{B\text{-local}}$ and $\alpha_{T\text{-local}}$ drop with increasing depth. The relative stress gradients at the surface depend on the kind of stress raiser, but for crankpin fillets they can be simplified to $2/R_H$ in bending and $1/R_H$ in

torsion. The journal fillets are handled analogously by using R_G and D_G. The nominal stresses are assumed to be linear from the surface to a midpoint in the web between the crankpin fillet and the journal fillet for bending and to the crankpin or journal centre for torsion.

The local SCFs are then functions of depth t:

- for bending (see Fig 17):

$$\alpha_{B-local} = (\alpha_B - 1)e^{\frac{-2t}{R_H}} + 1 - \left(\frac{2t}{\sqrt{W^2 + S^2}}\right)^{\frac{0,6}{\sqrt{\alpha_B}}}$$

- for torsion (see Fig 18):

$$\alpha_{T-local} = (\alpha_T - 1)e^{\frac{-t}{R_H}} + 1 - \left(\frac{2t}{D}\right)^{\frac{1}{\sqrt{\alpha_T}}}$$

If the pin is hardened only and the end of the hardened zone is closer to the fillet than three times the maximum hardness depth, FEA should be used to determine the actual stresses in the transition zone.

Figure 17 : Bending SCF in the crankpin fillet as a function of depth.

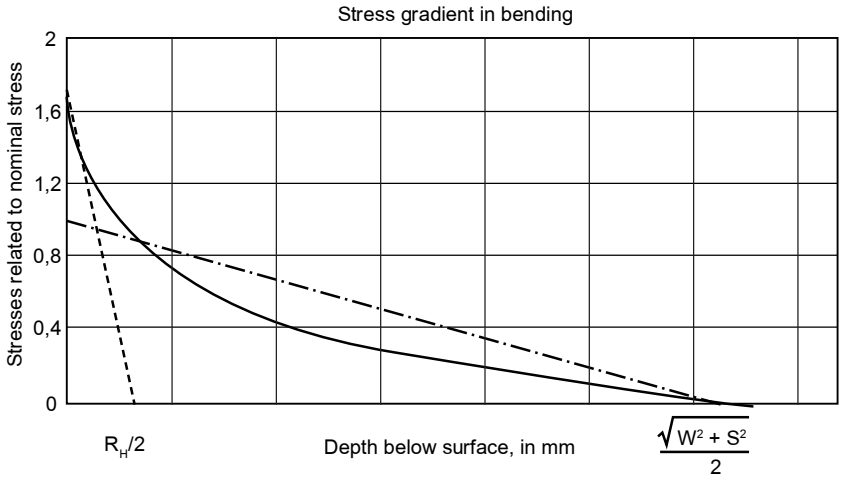

The corresponding SCF for the journal fillet can be found by replacing R_H with R_G.

Figure 18 : Torsional SCF in the crankpin fillet as a function of depth.

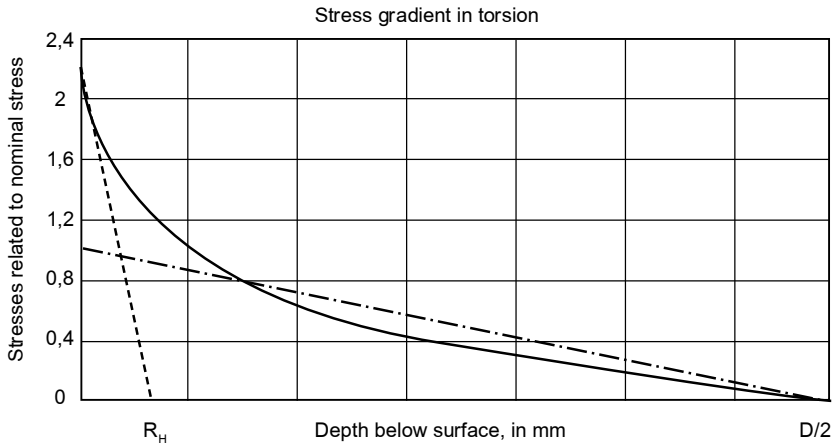

The corresponding SCF for the journal fillet can be found by replacing R_H with R_G and D with D_G.

11.3.3 Evaluation of oil bore stresses

Stresses in the oil bores can be determined also by FEA. The element size should be less than 1/8 of the oil bore diameter D_0 and the element mesh quality criteria should be followed as prescribed in Article [9]. The fine element mesh should continue well beyond a radial depth corresponding to the hardening depth.

The loads to be applied in the FEA are the torque, see [9.3.2] and the bending moment, with four-point bending as in [9.3.3].

If no FEA is available, a simplified approach may be used. This can be based on the empirically determined SCF from Article [3] if within its applicability range. Bending and torsional stresses at the point of peak stresses are combined as in Article [5].

Fig 19 indicates a local drop of the hardness in the transition zone between a hard and soft material. Whether this drop occurs depends also on the tempering temperature after quenching in the QT process.

The peak stress in the bore occurs at the end of the edge rounding. Within this zone the stress drops almost linearly to the centre of the pin. As can be seen from Fig 19, for shallow (A) and intermediate (B) hardening, the transition point practically coincides with the point of maximal stresses. For deep hardening the transition point comes outside of the point of peak stress and the local stress can be assessed as a portion (1-2tH/D) of the peak stresses where tH is the hardening depth.

The subsurface transition-zone stresses (using the minimum hardening depth) can be determined by means of local stress concentration factors along an axis perpendicular to the oil bore surface. These functions $\gamma_{B\text{-local}}$ and $\gamma_{T\text{-local}}$ have different shapes, because of the different stress gradients.

The stress concentration factors γ_B and γ_T are valid at the surface. The local SCFs $\gamma_{B\text{-local}}$ and $\gamma_{T\text{-local}}$ drop with increasing depth. The relative stress gradients at the surface depend on the kind of stress raiser, but for crankpin oil bores they can be simplified to $4/D_o$ in bending and $2/D_o$ in torsion. The local SCFs are then functions of the depth t:

$$\gamma_{B-\text{local}} = (\gamma_B - 1)e^{\frac{-4t}{D_o}} + 1$$

$$\gamma_{T-\text{local}} = (\gamma_T - 1)e^{\frac{-2t}{D_o}} + 1$$

Figure 19 : Stresses and hardness in induction hardened oil holes

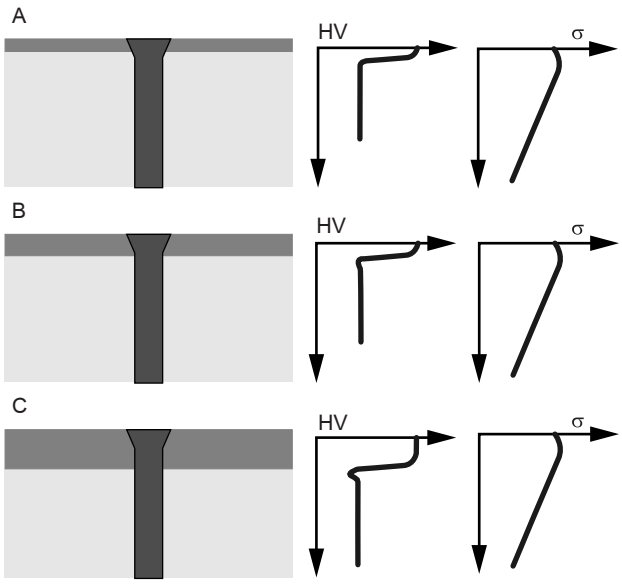

11.3.4 Acceptability criteria

Acceptance of crankshafts is based on fatigue considerations; This Appendix compares the equivalent alternating stress and the fatigue strength ratio to an acceptability factor of Q ≥ 1,15 for oil bore outlets, crankpin fillets and journal fillets. This shall be extended to cover also surface treated areas independent of whether surface or transition zone is examined.

11.4 Introduction hardening

11.4.1 Generally, the hardness specification shall specify the surface hardness range i.e. minimum and maximum values, the minimum and maximum extension in or through the fillet and also the minimum and maximum depth along the fillet contour. The referenced Vickers hardness is considered to be HV0,5...HV5.

The induction hardening depth is defined as the depth where the hardness is 80% of the minimum specified surface hardness.

In the case of crankpin or journal hardening only, the minimum distance to the fillet shall be specified due to the tensile stress at the heat-affected zone as shown in Fig 20.

If the hardness-versus-depth profile and residual stresses are not known or specified, one may assume the following:

- the hardness profile consists of two layers (see Fig 21):
  - constant hardness from the surface to the transition zone
  - constant hardness from the transition zone to the core material
- residual stresses in the hard zone of 200 MPa (compression)
- transition-zone hardness as 90% of the core hardness unless the local hardness drop is avoided
- transition-zone maximum residual stresses (von Mises) of 300 MPa tension.

If the crankpin or journal hardening ends close to the fillet, the influence of tensile residual stresses has to be considered. If the minimum distance between the end of the hardening and the beginning of the fillet is more than 3 times the maximum hardening depth, the influence may be disregarded.

Figure 20 : Residual stresses along the surface of a pin and fillet

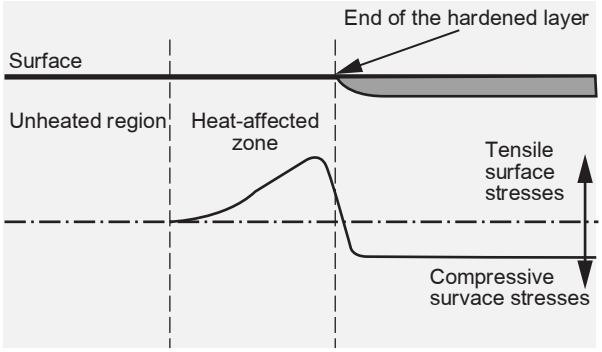

Figure 21 : Typical hardness as a function of depth.

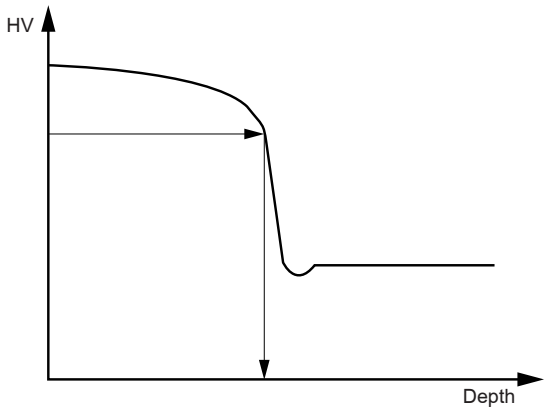

The arrows indicate the defined hardening depth. Note the indicated potential hardness drop at the transition to the core. This can be a weak point as local strength may be reduced and tensile residual stresses may occur.

11.4.2 Local fatigue strength

Induction-hardened crankshafts will suffer fatigue either at the surface or at the transition to the core. The fatigue strengths, for both the surface and the transition zone, can be determined by fatigue testing of full size cranks as described in Article [10]. In the case of a transition zone, the initiation of the fatigue can be either subsurface (i.e. below the hard layer) or at the surface where the hardening ends. Tests made with the core material only will not be representative since the tensile residual stresses at the transition are lacking.

Alternatively, the surface fatigue strength can be determined empirically as follows where HV is the surface Vickers hardness. The following formula provides a conservative value, with which the fatigue strength is assumed to include the influence of the residual stress. The resulting value is valid for a working stress ratio of R = –1:

$\sigma_{Fsurface} = 400 + 0,5\ (HV - 400)$

Note 1: It has to be noted also that the mean stress influence of induction-hardened steels may be significantly higher than that for QT steels.

The fatigue strength in the transition zone, without taking into account any possible local hardness drop, shall be determined by the equation introduced in Article [6].

For journal and respectively to crankpin fillet applies:

$$\sigma_{Ftransition,\ cpin} = \pm K(0,42 R_m + 39,3)$$
$$\left[0,264 + 1,073 Y^{-0,2} + \frac{785 - R_m}{4900} + \frac{196}{R_m}\sqrt{\frac{1}{X}}\right]$$

where:

- for journal fillet: $Y = D_G$ and $X = R_G$
- for crankpin fillet: $Y = D$ and $X = R_H$
- for oil bore outlet: $Y = D$ and $X = Do/2$

The influence of the residual stress is not included in the above formula.

For the purpose of considering subsurface fatigue, below the hard layer, the disadvantage of tensile residual stresses has to be considered by subtracting 20% from the value determined above. This 20% is based on the mean stress influence of alloyed quenched and tempered steel having a residual tensile stress of 300 MPa.

When the residual stresses are known to be lower, also smaller value of subtraction shall be used. For low-strength steels the percentage chosen should be higher.

For the purpose of considering surface fatigue near the end of the hardened zone (i.e. in the heat-affected zone shown in the Fig 20) the influence of the tensile residual stresses can be considered by subtracting a certain percentage, in accordance with Tab 4, from the value determined by the above formula.

Table 4 : The influence of tensile residual stresses at a given distance from the end of the hardening towards the fillet

Maximum hardening depth			%
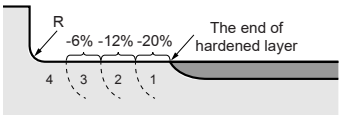	1	0 to 1,0	20
	2	1,0 to 2,0	12
	3	2,0 to 3,0	6
	4	3,0 or more	0

11.5 Nitriding

11.5.1 The hardness specification shall include the surface hardness range (min and max) and the minimum and maximum depth. Only gas nitriding is considered. The referenced Vickers hardness is considered to be HV0,5.

The depth of the hardening is defined in different ways in the various standards and the literature. The most practical method to use in this context is to define the nitriding depth tN as the depth to a hardness of 50 HV above the core hardness.

The hardening profile should be specified all the way to the core. If this is not known, it may be determined empirically via the following formula:

$$HV(t) = HV_{core} + (HV_{surface} - HV_{core})\left(\frac{50}{HV_{surface} - HV_{core}}\right)^{\left(\frac{t}{t_N}\right)^2}$$

where:

t : Local depth

HV(t) : Hardness at depth t

HV_{core} : Core hardness (minimum)

$HV_{surface}$: Surface hardness (minimum)

tN : Nitriding depth as defined above (minimum).

11.5.2 Local fatigue strength

It is important to note that in nitrided crankshaft cases, fatigue is found either at the surface or at the transition to the core. This means that the fatigue strength can be determined by tests as described in Article [10].

Alternatively, the surface fatigue strength (principal stress) can be determined empirically and conservatively as follows. This is valid for a surface hardness of 600 HV or greater:

$\sigma_{Fsurface}$ = 450 Mpa

Note 1: This fatigue strength is assumed to include the influence of the surface residual stress and applies for a working stress ratio of R = –1.

The fatigue strength in the transition zone can be determined by the equation introduced in Article [6]. For crankpin and respectively to journal applies:

$$\sigma_{Ftransition,\ cpin} = \pm K(0,42R_m + 39,3)$$
$$\left[0,264 + 1,073Y^{-0,2} + \frac{785 - R_m}{4900} + \frac{196}{R_m}\sqrt{\frac{1}{X}}\right]$$

where:

- for journal fillet: Y = D_G and X = R_G
- for crankpin fillet: Y = D and X = R_H
- for oil bore outlet: Y = D and X = Do/2

Note 2: This fatigue strength is not assumed to include the influence of the residual stresses.

In contrast to induction-hardening the nitrited components have no such distinct transition to the core. Although the compressive residual stresses at the surface are high, the balancing tensile stresses in the core are moderate because of the shallow depth. For the purpose of analysis of subsurface fatigue the disadvantage of tensile residual stresses in and below the transition zone may be even disregarded in view of this smooth contour of a nitriding hardness profile.

Although in principle the calculation should be carried out along the entire hardness profile, it can be limited to a simplified approach of examining the surface and an artificial transition point. This artificial transition point can be taken at the depth where the local hardness is approximately 20 HV above the core hardness. In such a case, the properties of the core material should be used. This means that the stresses at the transition to the core can be found by using the local SCF formula mentioned earlier when inserting t = 1,2tN.

Figure 22 : Sketch of the location for the artificial transition point in the depth direction

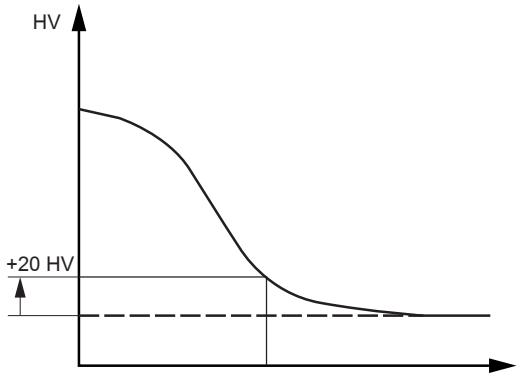

11.6 Cold forming

11.6.1 The advantage of stroke peening or cold rolling of fillets is the compressive residual stresses introduced in the high-loaded area. Even though surface residual stresses can be determined by X-ray diffraction technique and subsurface residual stresses can be determined through neutron diffraction, the local fatigue strength is virtually non-assessable on that basis since suitable and reliable correlation formula are hardly known.

Therefore, the fatigue strength has to be determined by fatigue testing; see also Article [10]. Such testing is normally carried out as four-point bending, with a working stress ratio of R = –1. From these results, the bending fatigue strength, surface or subsurface-initiated depending on the manner of failure can be determined and expressed as the representative fatigue strength for applied bending in the fillet.

In comparison to bending, the torsion fatigue strength in the fillet may differ considerably from the ratio (utilized by the von Mises criterion) $3^{1/2}$. The forming-affected depth that is sufficient to prevent subsurface fatigue in bending, may still allow subsurface fatigue in torsion. Another possible reason for the difference in bending and torsion could be the extension of the highly stressed area.

The results obtained in a full-size crank test can be applied for another crank size provided that the base material (alloyed Q + T) is of the similar type and that the forming is done so as to obtain the similar level of compressive residual stresses at the surface as well as through the depth. This means that both the extension and the depth of the cold forming must be proportional to the fillet radius.

11.6.2 Stroke peening by means of a ball

The fatigue strength obtained can be documented by means of full size crank tests or by empirical methods if applied on the safe side. If both bending and torsion fatigue strengths have been investigated and differ from the ratio $3^{1/2}$, the von Mises criterion should be excluded.

If only bending fatigue strength has been investigated, the torsional fatigue strength should be assessed conservatively. If the bending fatigue strength is concluded to be x% above the fatigue strength of the non-peened material, the torsional fatigue strength should not be assumed to be more than 2/3 of x% above that of the non-peened material.

As a result of the stroke peening process the maximum of the compressive residual stress is found in the subsurface area. Therefore, depending on the fatigue testing load and the stress gradient, it is possible to have higher working stresses at the surface in comparison to the local fatigue strength of the surface. Because of this phenomenon small cracks may appear during the fatigue testing, which will not be able to propagate in further load cycles and/or with further slight increases of the testing load because of the profile of the compressive residual stress. Put simply, the high compressive residual stresses below the surface ‘arrest’ small surface cracks.

This is illustrated in Fig 23 as gradient load 2.

In fatigue testing with full-size crankshafts these small “hairline cracks” should not be considered to be the failure crack. The crack that is technically the fatigue crack leading to failure, and that therefore shuts off the test-bench, should be considered for determination of the failure load level. This also applies if induction-hardened fillets are stroke-peened.

In order to improve the fatigue strength of induction-hardened fillets it is possible to apply the stroke peening process in the crankshafts’ fillets after they have been induction-hardened and tempered to the required surface hardness. If this is done, it might be necessary to adapt the stroke peening force to the hardness of the surface layer and not to the tensile strength of the base material. The effect on the fatigue strength of induction hardening and stroke peening the fillets shall be determined by a full-size crankshaft test.

11.6.3 Use of existing results for similar crankshafts

The increase in fatigue strength, which is achieved by applying stroke peening (see [11.6.2]), may be utilized in another similar crankshaft if all of the following criteria are fulfilled:

- ball size relative to fillet radius within ±10% in comparison to the tested crankshaft
- at least the same circumferential extension of the stroke peening
- angular extension of the fillet contour relative to fillet radius within ±15% in comparison to the tested crankshaft and located to cover the stress concentration during engine operation
- similar base material, e.g. alloyed quenched and tempered
- forward feed of ball of the same proportion of the radius
- force applied to ball proportional to base material hardness (if different)
- force applied to ball proportional to square of ball radius.

11.6.4 Cold rolling

The fatigue strength can be obtained by means of full size crank tests or by empirical methods, if these are applied so as to be on the safe side. If both, bending and torsion fatigue strengths have been investigated, and differ from the ratio $3^{1/2}$, the von Mises criterion should be excluded.

If only bending fatigue strength has been investigated, the torsional fatigue strength should be assessed conservatively. If the bending fatigue strength is concluded to be x% above the fatigue strength of the non-rolled material, the torsional fatigue strength should not be assumed to be more than 2/3 of x% above that of the non-rolled material.

11.6.5 Use of existing results for similar crankshhafts

The increase in fatigue strength, which is achieved applying cold rolling (see [11.6.4]), may be utilized in another similar crankshaft if all of the following criteria are fulfilled:

- at least the same circumferential extension of cold rolling
- angular extension of the fillet contour relative to fillet radius within ±15% in comparison to the tested crankshaft and located to cover the stress concentration during engine operation
- similar base material, e.g. alloyed quenched and tempered
- roller force to be calculated so as to achieve at least the same relative (to fillet radius) depth of treatment.

Figure 23 : Working and residual stresses below the stroke-peened surface

Straight lines 1 to 3 represent different possible load stress gradients.

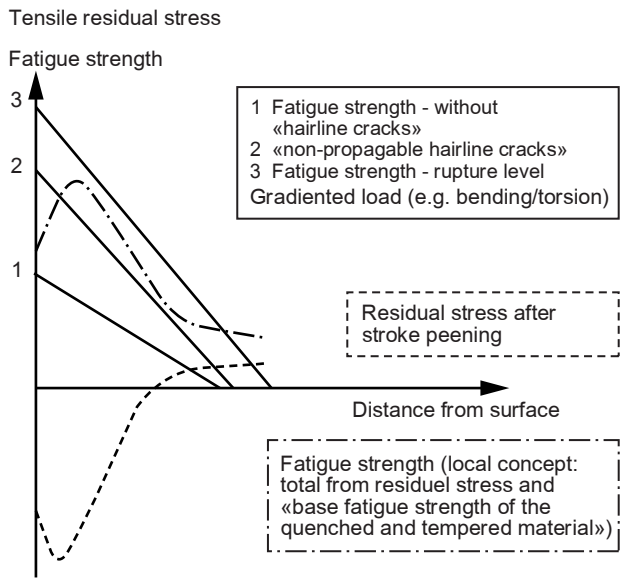

12 Calculation of stress concentration factors in the oil bore outlets of crankshafts through utilization of the finite element method

12.1 General

12.1.1 The objective of the analysis described in this Article is to substitute the analytical calculation of the stress concentration factor (SCF) at the oil bore outlet with suitable finite element method (FEM) calculated figures. The former method is based on empirical formula developed from strain gauge readings or photo-elasticity measurements of various round bars. Because use of these formula beyond any of the validity ranges can lead to erroneous results in either direction, the FEM-based method is highly recommended.

The SCF calculated according to the rules set forth in this document is defined as the ratio of FEM-calculated stresses to nominal stresses calculated analytically. In use in connection with the present method in this Appendix, principal stresses shall be calculated.

The analysis is to be conducted as linear elastic FE analysis, and unit loads of appropriate magnitude are to be applied for all load cases.

It is advisable to check the element accuracy of the FE solver in use, e.g. by modeling a simple geometry and comparing the FEM-obtained stresses with the analytical solution.

A boundary element method (BEM) approach may be used instead of FEM.

12.2 Model requirements

12.2.1 The basic recommendations and assumptions for building of the FE-model are presented in [12.2.2]. The final FE-model must meet one of the criteria in [12.2.4].

12.2.2 Element mesh recommendations

For the mesh quality criteria to be met, construction of the FE model for the evaluation of stress concentration factors according to the following recommendations is advised:

a) the model consists of one complete crank, from the main bearing centre line to the opposite side's main bearing centre line.

b) the following element types are used in the vicinity of the outlets:
   - 10 node tetrahedral elements
   - 8 node hexahedral elements
   - 20 node hexahedral elements

c) the following mesh properties for the oil bore outlet are used:
   - maximum element size a = r / 4 through the entire outlet fillet as well as in the bore direction (if 8-node hexahedral elements are used, even smaller elements are required for meeting of the quality criterion)
   - recommended manner for element size in the fillet depth direction
     - first layer's thickness equal to element size of a
     - second layer's thickness equal to element size of 2a
     - third -layer thickness equal to element size of 3a

d) in general, the rest of the crank should be suitable for numeric stability of the solver

e) drillings and holes for weight reduction have to be modeled.

Submodeling may be used as long as the software requirements are fulfilled.

12.2.3 Material

This Appendix does not consider material properties such as Young's modulus (E) and Poisson's ratio (υ). In the FE analysis, these material parameters are required, as primarily strain is calculated and stress is derived from strain through the use of Young's modulus and Poisson's ratio. Reliable values for material parameters have to be used, either as quoted in the literature or measured from representative material samples.

For steel the following is advised:

$E = 2{,}05\ 10^5$ MPa and $\upsilon = 0{,}3$

12.2.4 Element mesh quality criteria

If the actual element mesh does not fulfill any of the following criteria in the area examined for SCF evaluation, a second calculation, with a finer mesh is to be performed.

a) Principal stresses criterion

   The quality of the mesh should be assured through checking of the stress component normal to the surface of the oil bore outlet radius. With principal stresses σ_1, σ_2 and σ_3 the following criterion must be met:

   $$\min(|\sigma_1||\sigma_2||\sigma_3|) < 0{,}03 \max(|\sigma_1||\sigma_2||\sigma_3|)$$

b) Averaged/unaveraged stresses criterion

   The averaged/unaveraged –stresses criterion is based on observation of the discontinuity of stress results over elements at the fillet for the calculation of the SCF:

   Unaveraged nodal stress results calculated from each element connected to a node i should differ less than 5% from the 100% averaged nodal stress results at this node i at the location examined.

12.3 Load cases and assessment of stress

12.3.1 For substitution of the analytically determined SCF in this Appendix, calculation shall be performed for the following load cases.

12.3.2 Torsion

The structure is loaded in pure torsion. The surface warp at the end faces of the model is suppressed.

Torque is applied to the central node, on the crankshaft axis. This node acts as the master node with six degrees of freedom, and is connected rigidly to all nodes of the end face.

The boundary and load conditions are valid for both in-line- and V- type engines.

For all nodes in an oil bore outlet, the principal stresses are obtained and the maximum value is taken for subsequent calculation of the SCF:

$$\gamma_T = \frac{\max(|\sigma_1|,|\sigma_2|,|\sigma_3|)}{\tau_N}$$

where the nominal torsion stress τ_N referred to the crankpin is evaluated per [2.2.2] with torque T:

$$\tau_N = \frac{T}{w_P}$$

12.3.3 Bending

The structure is loaded in pure bending. The surface warp at the end faces of the model is suppressed.

The bending moment is applied to the central node on the crankshaft axis. This node acts as the master node, with six degrees of freedom, and is connected rigidly to all nodes of the end face.

The boundary and load conditions are valid for both in-line- and V- type engines.

For all nodes in the oil bore outlet, principal stresses are obtained and the maximum value is taken for subsequent calculation of the SCF:

$$\gamma_B = \frac{\max(|\sigma_1|,|\sigma_2|,|\sigma_3|)}{\sigma_N}$$

where the nominal bending stress σ_N referred to the crankpin is calculated per [2.1.2], item d) with bending moment M:

$$\sigma_N = \frac{M}{w_e}$$

Appendix 2 Reciprocating Internal Combustion Engines Fuelled by Natural Gas

1 General

1.1 Scope

1.1.1 Type of engines

This appendix addresses the requirements for marine reciprocating internal combustion engines supplied with natural gas as fuel.

The scope of this Appendix is intended for natural gas fuelled engines. It may also be referred for engines using similar fuels with main component methane such as bio-methane or synthetic methane.

It is to be ensured by the gas supply system that the gas supplied to the engine is always in gaseous state. This appendix does not cover requirements for liquid or cryogenic gas.

The engines can be dual fuel engines (hereinafter referred to as DF engines), gas fuel only engines (hereinafter referred to as GF engines), or any variations thereof including fuel sharing capability.

DF engines and GF engines may not be permitted for emergency applications.

1.1.2 Application

This Appendix is to be applied in association with other relevant requirements of Ch 1, Sec 2, as far as found applicable to the specific engine design.

1.2 Definitions

1.2.1 Certified safe

Certified safe equipment is equipment certified by an independent national test institution or competent body to be in accordance with a recognised standard for electrical apparatus in hazardous areas.

Note 1: Refer to IEC 60079 series, Explosive atmospheres and IEC 60092-502:1999 Electrical Installations in Ships – Tankers – Special Features.

1.2.2 Double block and bleed valves

Double block and bleed valves means the set of valves referred to in:

- Pt D, Ch 9, Sec 16, [4.5.1]
- NR529, 2.2.9 and NR529, 9.4.4 to 9.4.6.

1.2.3 Dual fuel engine (“DF engine”)

Dual fuel engine (“DF engine”) means an engine that can burn natural gas as fuel simultaneously with liquid fuel, either as pilot oil or bigger amount of liquid fuel (gas mode), and also has the capability of running on liquid diesel fuel oil only (Diesel mode).

1.2.4 Explosion relief device

Explosion relief device means a device to protect personnel and component against a determined overpressure in the event of a gas explosion. The device may be a valve, a rupture disc or other, as applicable.

1.2.5 Gas

Gas means natural gas used as fuel consisting primarily of methane.

Note 1: Gas may also be bio-methane or synthetic methane etc. with methane as main component.

1.2.6 Gas admission valve

Gas admission valve is a valve or injector on the engine, which controls gas supply to the cylinder(s) according to the engine’s gas demand.

1.2.7 Gas engine

Gas engine means a DF engine, a GF engine, or any variations thereof.

1.2.8 Gas fuel only engine (“GF engine”)

Gas fuel only engine (“GF engine”) means an engine capable of operating on gas fuel only and not able to switch over to oil fuel operation.

1.2.9 Gas piping

Gas piping means piping containing gas or air / gas mixtures.

1.2.10 High pressure gas

High pressure gas means gas with a maximum working pressure greater than 10 bar gauge.

1.2.11 Low pressure gas

Low pressure gas means gas with a maximum working pressure lower or equal to 10 bar gauge.

1.2.12 Lower heating value (LHV)

Lower heating value (LHV) means the amount of heat produced from the complete combustion of a specific amount of fuel, excluding latent heat of vaporization of water.

1.2.13 Methane number

Methane Number is a measure of resistance of a gas fuel to knock, which is assigned to a test fuel based upon operation in knock testing unit at the same standard knock intensity.

Note 1: Pure methane is used as the knock resistant reference fuel, that is, methane number of pure methane is 100, and pure hydrogen is used as the knock sensitive reference fuel, methane number of pure hydrogen is 0.

1.2.14 Pilot fuel

Pilot fuel means the fuel oil that is injected into the cylinder to ignite the main gas-air mixture on DF engines.

1.2.15 Pre-mixed engine

Pre-mixed engine means an engine where gas is supplied in a mixture with air through a common manifold for all cylinders, e.g. mixed before or after the turbocharger.

1.2.16 Safety Concept

Safety concept is a document describing the safety philosophy with regard to gas as fuel. It describes how risks associated with this type of fuel are controlled under reasonably foreseeable abnormal conditions as well as possible failure scenarios and their control measures. The results of the risk analysis, see [1.4], are to be reflected in the safety concept.

Note 1: A detailed evaluation regarding the hazard potential of injury from a possible explosion is to be carried out and reflected in the safety concept of the engine.

1.3 Documents to be submitted

1.3.1 In addition to those required in Ch 1, Sec 2, Tab 1, Ch 1, Sec 2, Tab 2 and Ch 1, Sec 2, Tab 3, the documents and drawing listed in Tab 1 are to be submitted for approval of DF or GF engines.

Where considered necessary, the Society may request further documents to be submitted.

Table 1 : Documents and drawings to be submitted

No.	A/I **(1)**	Item
Documents to be submitted for both DF and GF engines		
1	A	Schematic layout or other equivalent documents of gas system on the engine
2	A	Gas piping system (including double-walled arrangement where applicable) **(4)**
3	A	Parts for gas admission system **(4)**
4	A	Arrangement of explosion relief valves (crankcase **(2)**, charge air manifold **(5)**, exhaust gas manifold **(5)** and exhaust gas system) as applicable
5	A	List of certified safe equipment and relevant certification
6	A	Hazardous area plan
7	I	Safety concept
8	I	Report of the risk analysis **(3)**
9	I	Gas used as fuel specification
Documents to be submitted for DF engines only		
10	A	Schematic layout or other equivalent documents of pilot fuel system
11	A	Shielding of high pressure fuel pipes for pilot fuel system, assembly
12	A	High pressure parts for pilot fuel oil injection system **(4)**
Documents to be submitted for GF engines only		
13	A	Schematic layout or other equivalent documents of the ignition system

(1) A: To be submitted for approval ; I: To be submitted for information
(2) If required by Ch 1, Sec 2, see also [2.2.4], item a)
(3) See [1.4]
(4) The documentation is to contain specification of design pressures, working pressure, pipe dimensions and materials
(5) See Ch 1, App 8 for the type approval of such equipment.

1.4 Risk analysis

1.4.1 Scope of the risk analysis

The risk analysis is to address:

- a failure or malfunction of any system or component involved in the gas operation of the engine
- a gas leakage downstream of the double block and bleed valves
- the safety of the engine in case of emergency shutdown or blackout, when running on gas
- the interactions between the gas fuel system and the engine.

Note 1: With regard to the scope of the risk analysis it shall be noted that failures in systems external to the engine, such as fuel storage or fuel gas supply systems, may require action from the engine control and monitoring system in the event of an alarm or fault condition. Conversely failures in these external systems may, from the vessel perspective, require additional safety actions from those required by the engine limited risk analysis required by this appendix.

1.4.2 Form of the risk analysis

The risk analysis is to be carried out in accordance with international standard IEC 31010:2019: Risk management - Risk assessment techniques, or other recognized standards.

The required analysis is to be based on the single failure concept, which means that only one failure needs to be considered at the same time. Both detectable and non-detectable failures are to be considered. Consequences failures, i.e. failures of any component directly caused by a single failure of another component, are also to be considered.

1.4.3 Procedure for the risk analysis

The risk analysis is to:

a) Identify all the possible failures in the concerned equipment and systems which could lead:
   - to the presence of gas in components or locations not designed for such purpose, and/or
   - to ignition, fire or explosion.

b) Evaluate the consequences (see also [2.1.2])

c) Where necessary, identify the failure detection method

d) Where the risk cannot be eliminated, identify the corrective measures:
   1) in the system design, such as:
      - redundancies
      - safety devices, monitoring or alarm provisions which permit restricted operation of the system
   2) in the system operation, such as:
      - initiation of the redundancy
      - activation of an alternative mode of operation.

The results of the risk analysis are to be documented.

1.4.4 Equipment and systems to be analysed

The risk analysis required for engines is to cover at least the following aspects:

a) failure of the gas-related systems or components, in particular:
   - gas piping and its enclosure, where provided
   - gas admission valves

Note 1: Failures of the gas supply components not located directly on the engine, such as block-and-bleed valves and other components of the gas supply system, are not to be considered in the analysis.

b) failure of the ignition system (oil fuel pilot injection, sparking plugs, glow plugs)

c) failure of the air to fuel ratio control system (charge air bypass, gas pressure control valve, etc.)

d) for engines where gas is supplied upstream of the turbocharger compressor, failure of a component likely to result in a source of ignition (hot spots)

e) failure of the gas combustion or abnormal combustion (misfiring, knocking)

f) failure of the engine monitoring, control and safety systems

Note 2: Where engines incorporate electronic control systems, a failure mode and effects analysis (FMEA) is to be carried out in accordance with Ch 1, Sec 2, Tab 1, Footnote **(5)**.

g) presence of gas in engine components (e.g. air inlet manifold or scavenge space and exhaust manifold) and in the external systems connected to the engines (e.g. exhaust duct, cooling water system, hydraulic oil system).

h) changes of operating modes for DF engines

i) hazard potential for crankcase fuel gas accumulation, for trunk-piston engines, refer to NR529, 10.3.1.2 and Ch 1, Sec 2, [2.3.4]

j) risk of crankcase explosion in connection with active crankcase ventilation which produces a flow of external air into the crankcase, (see Ch 1, Sec 2, [2.3.4]).

2 Design Requirements

2.1 General Principles

2.1.1 The manufacturer is to declare the allowable gas composition limits for the engine and the minimum and (if applicable) maximum methane number.

2.1.2 Components containing or likely to contain gas are to be designed to:

- minimise the risk of fire and explosion so as to demonstrate an appropriate level of safety commensurate with that of an oil-fuelled engine;
- mitigate the consequences of a possible explosion to a level providing a tolerable degree of residual risk, due to the strength of the component(s) or the fitting of suitable explosion relief devices of an approved type, see Ch 1, App 4 and Ch 1, App 8.

  The strength of the component(s) of arrangement of explosion relief devices is be documented (e.g., as part of risk analysis) or otherwise demonstrated to be sufficient for a worst-case explosion.

Also refer to NR529, 10.2 and NR529, 10.3.

2.1.3 Discharge from explosion relief devices are to prevent the passage of flame to the machinery space and be arranged such that the discharge does not endanger personnel or damage other engine components or systems.

2.1.4 Explosion relief devices are to be fitted with a flame arrester.

2.2 Gas piping

2.2.1 General

The requirements of this section apply to engine-mounted gas piping. The piping is to be designed in accordance with the criteria for gas piping (design pressure, wall thickness, materials, piping fabrication and joining details etc.) as given in NR529, Part A-1, 7; Pt D, Ch 9, Sec 5, [1] and Pt D, Ch 9, Sec 5, [9] and Pt D, Ch 9, Sec 16, as applicable. Tab 2 details these requirements.

Other connections as mentioned in NR 529, 7.3.6.4.4 may be accepted subject to type approval in accordance with the relevant requirements of Ch 1, Sec 10.

All single walled or high-pressure gas pipes are to be considered as Class I.

Low pressure double walled gas pipes are to be considered as Class II.

All secondary enclosures for gas pipes are to be considered as Class II.

Single walled gas vent pipes, if permitted, are to be considered as Class I, except it is justified that the maximum built up pressure is less than 5 bar gauge, in which case it should be considered as Class II.

Gas vent pipes protected by a secondary enclosure are to be considered as Class II.

Secondary enclosure for vent pipes are to be considered as Class III.

Flexible bellows used in the fuel gas system on the engine are to be approved based on the requirements of NR 529 16.7.2, and Pt D, Ch 9, Sec 5, [13.4], as applicable.

The number of cycles, pressure, temperature, axial movement, rotational movement and transverse movement which the bellow will encounter in actual service on the engine are to be specified by the engine designer.

Endurance against high cycle fatigue due to vibration loads is to be verified by testing or alternatively be documented by the Expansion Joint Manufacturers Association, Inc. (EJMA) calculation or equivalent (i.e., more than 10^7 cycles).

Note 1: The fatigue test due to ship deformations in NR 529, 16.7.2.4 is considered not relevant for bellows which are an integral part of the engine.

Table 2 : Design pressure for gas pipes

	Design pressure	
Gas pipe, low pressure	see NR 529, 7.3.3.1	see Pt D, Ch 9, Sec 5, [4.1.1]
Gas pipe, high pressure	see NR 529, 7.3.3.1	see Pt D, Ch 9, Sec 5, [4.1.1]
outer pipe, low pressure	see NR 529, 9.8.1	see Pt D, Ch 9, Sec 5, [4.1.4]
outer pipe, high pressure	see NR 529, 9.8.2	see Pt D, Ch 9, Sec 5, [4.1.4]
Open ended pipes	see NR 529, 7.3.3.2	see Pt D, Ch 9, Sec 5, [4.1.1]

2.2.2 Arrangement of the gas piping system on the engine

Pipes and equipment containing fuel gas are defined as hazardous area Zone 0 (refer to NR529, 12.5.1).

The space between the gas fuel piping and the wall of the outer pipe or duct is defined as hazardous area Zone 1 (refer to NR529, 12.5.2.6).

a) Normal "double wall" arrangement

The gas piping system on the engine is to be arranged according to the principles and requirements of NR529, 9.6. For ships having the service notation **liquefied gas carrier**, Pt D, Ch 9, Sec 16, [4.3.1] applies.

The design criteria for the double pipe or duct are given in NR529, 9.8 and NR529, 7.4.1.4.

In case of a ventilated double wall, the ventilation inlet is to be located in accordance with the provisions of NR529, 13.8.3. For ships having the service notation **liquefied gas carrier**, Pt D, Ch 9, Sec 16, [4.3.1], item b) applies.

The pipe or duct is to be pressure tested at 1,5 x design pressure, to ensure gas tight integrity and to show that it can withstand the expected maximum pressure at gas pipe rupture.

b) Alternative arrangement

Single walled gas piping is only acceptable:

- for engines supplied with low pressure gas and installed in ESD protected machinery spaces, as defined in NR529, 5.4.1.2 and in compliance with other relevant parts of NR529 (e.g. NR529, 5.6)
- in the case as per NR529, 9.6.2, Note 18.

For ships having the service notation **liquefied gas carrier**, Part D, Chapter 9 applies.

In case of gas leakage in an ESD-protected machinery space, which would result in the shut-down of the engine(s) in that space, a sufficient propulsion and manoeuvring capability including essential and safety systems is to be maintained.

Therefore the safety concept of the engine is to clearly indicate application of the "double wall" or "alternative" arrangement.

Note 1: The minimum power to be maintained is to be assessed on a case-by-case basis from the operational characteristics of the ship.

2.2.3 Charge air system and exhaust gas system on the engine

a) The charge air system and the exhaust gas system on the engine are to be designed in accordance with [2.1.2].

b) In case of a single engine installation, the engine is to be capable of operating at sufficient load to maintain power to essential consumers after opening of the pressure relief devices caused by an explosion event. Sufficient power for propulsion capability is to be maintained.

c) Load reduction is to be considered on a case-by-case basis, depending on engine configuration (single or multiple) and charge air relief mechanism (self-closing valve or rupture disc).

d) Continuous relief of exhaust gas (through open rupture disc) into the engine room or other enclosed spaces is not acceptable.

e) Suitable explosion relief system for air inlet manifolds, scavenge spaces and exhaust system should be provided unless designed to accommodate the worst-case overpressure due to ignited gas leaks or justified by the safety concept of the engine. A detailed evaluation regarding the hazard potential of overpressure in air inlet manifolds, scavenge spaces and exhaust system should be carried out and reflected in the safety concept of the engine.

f) Explosion relief devices for air inlet and exhaust manifold are to be type approved according to Ch 1, App 8.

g) The necessary total relief area and the arrangement of the explosion relief devices are be determined taking into account:

- the worst-case explosion pressure depending on initial pressure and gas concentration,
- the volume and geometry of the component, and
- the strength of the component.

The arrangement is to be determined in the risk analysis (see [1.4.4], item g) and reflected in the safety concept.

2.2.4 Engine crankcase

a) Crankcase explosion relief valves

Crankcase explosion relief valves are to be installed in accordance with Ch 1, Sec 2, [2.3.4]. Refer also to NR529, 10.3.1.2.

For engines not covered by Ch 1, Sec 2, [2.3.4], the detailed evaluation as required in [1.4.4], item i, is to determine if crankcase explosion relief valves are necessary.

b) Inerting

For maintenance purposes, a connection, or other means, is to be provided for crankcase inerting and ventilating and gas concentration measuring.

c) Crankcase ventilation

Ventilation of crankcase (either supply or extraction), if arranged, is to comply with Ch 1, Sec 2, [2.3.2]. Relevant evidence is to be documented in Safety Concept.

The ventilation systems for crankcase, sump and other similar engine spaces are to be independent from the systems on the other engines

2.2.5 Gas ignition in the cylinder

The requirements of NR529, 10.3 apply. For ships having the service notation **liquefied gas carrier**, Pt D, Ch 9, Sec 16, [7.1.1] applies.

2.2.6 Control, monitoring, alarm and safety systems

The engine control system is to be independent and separate from the safety system.

The gas admission valves are to be controlled by the engine control system or by the engine gas demand.

Combustion is to be monitored on an individual cylinder basis.

In the event that poor combustion is detected on an individual cylinder, gas operation may be allowed in the conditions specified in NR529, 10.3.1.6.

If monitoring of combustion for each individual cylinder is not practicable due to engine size and design, common combustion monitoring may be accepted.

Unless the risk analysis required by [1.4] proves otherwise, the monitoring and safety system functions for DF or GF engines are to be provided in accordance with Tab 3 in addition to the general monitoring and safety system functions required by the Rules.

Note 1: For DF engines, Tab 3 applies only to the gas mode.

2.2.7 Gas admission valves

Electrically operated gas admission valves are to be certified safe as follows:

- The inside of the valve contains gas and is therefore to be certified for Zone 0.
- When the valve is located within a pipe or duct in accordance with the provisions of [2.2.2], item a), the outside of the valve is to be certified for Zone 1.
- When the valve is arranged without enclosure in accordance with the "ESD-protected machinery space" concept (see [2.2.2], item b)), no certification is required for the outside of the valve, provided that the valve is de-energized upon gas detection in the space.

However, if they are not rated for the zone they are intended for, it is to be documented that they are suitable for that zone. Documentation and analysis are to be based on IEC 60079-10-1:2015 or IEC 60092-502:1999.

Gas admission valves operated by hydraulic oil system are to be provided with sealing arrangement to prevent gas from entering the hydraulic oil system.

Table 3 : Monitoring and safety system functions for DF and GF engines

Parameter	Alarm	Automatic activation of the double block-and-bleed valves	Automatic switching over to oil fuel mode **(1)**	Engine shutdown
Abnormal pressures in the gas fuel supply line	X	X	X	X **(5)**
Gas fuel supply systems - malfunction	X	X	X	X **(5)**
Pilot fuel injection or spark ignition systems - malfunction	X	X **(2)**	X	X **(2) (5)**
Exhaust gas temperature after each cylinder - high	X	X **(2)**	X	X **(2) (5)**
Exhaust gas temperature after each cylinder, deviation from average – low **(3)**	X	X **(2)**	X	X **(2) (5)**
Cylinder pressure or ignition - failure, including misfiring, knocking and unstable combustion	X	X **(2) (4)**	X **(4)**	X **(2) (4) (5)**
Oil mist concentration in crankcase or bearing temperature **(6)** - high	X	X		X **(9)**
Pressure in the crankcase – high **(8)**	X	X	X	
Engine stops - any cause	X	X		
Failure of the control-actuating medium of the block and bleed valves	X	X	X	
Failure of crankcase ventilation system, if applicable	X	X **(7)**	X **(7)**	

(1) DF engine only, when running in gas mode
(2) For GF engines, the double block-and-bleed valves and the engine shut-down may not be activated in case of specific failures affecting only one cylinder, provided that the concerned cylinder can be individually shut-off and the safe operation of the engine in such conditions is demonstrated by the risk analysis
(3) Required only if necessary for the detection of misfiring
(4) In the case where the failure can be corrected by an automatic mitigation action, only the alarm may be activated. If the failure persists after a given time, the safety actions are to be activated
(5) GF engine only
(6) Where required by Ch 1, Sec 2, [2.3.5]
(7) Automatic safety actions to be activated as specified by the engine manufacturer, see Ch 1, Sec 2, [2.3.5]
(8) Only for trunk piston engines. This pressure sensor cannot replace or substitute a gas detector
(9) Only for trunk piston engines. For crosshead engines slow down applies (see Ch 1, Sec 2, Tab 4

3 Specific design requirements

3.1 DF Engines

3.1.1 General

The maximum continuous power that a DF engine can develop in gas mode may be lower than the approved MCR of the engine (i.e. in oil fuel mode), depending in particular on the gas composition and its quality or the engine design.

This maximum continuous power available in gas mode and the corresponding conditions are to be stated by the engine manufacturer.

3.1.2 Starting, changeover and stopping

DF engines are to be arranged to started using either oil fuel or gas fuel with pilot oil fuel for ignition. The engines are to be arranged for rapid changeover from gas use to fuel oil use. In the case of changeover to either fuel supply, the engines are to be capable of continuous operation using the alternative fuel supply without interruption to the power supply.

Changeover to gas fuel operation is to be only possible at a power level and under conditions where it can be done with acceptable reliability and safety as demonstrated through testing.

Changeover from gas fuel operation mode to oil fuel operation mode is to be possible at all situations and power levels.

The changeover process itself from and to gas operation is to be automatic but manual interruption is to be possible in all cases.

If the power level or other conditions do not allow safe and reliable gas operation, changeover to oil fuel mode is to be automatically performed.

In case of shut-off of the gas supply, the engines are to be capable of continuous operation by oil fuel only.

3.1.3 Pilot injection

Gas supply to the combustion chamber is not to be possible without operation of the pilot oil injection.

Note 1: Pilot injection is to be monitored for example by fuel oil pressure and combustion parameters.

3.2 GF engines

3.2.1 Spark ignition system

In case of failure of the spark ignition, the engine is to be shut down except if this failure is limited to one cylinder, subject to immediate shut off of the cylinder gas supply and provided that the safe operation of the engine is substantiated by the risk analysis and by tests.

3.3 Pre-mixed engines

3.3.1 Charge air system

Inlet manifold, turbo-charger, charge air cooler, etc. are to be regarded as parts of the fuel gas supply system. Failures of those components likely to result in a gas leakage are to be considered in the risk analysis (see [1.4]).

Flame arresters are to be installed before each cylinder head, unless otherwise justified in the risk analysis, considering design parameters of the engine such as the gas concentration in the charge air system, the path length of the gas-air mixture in the charge air system, etc.

3.4 Two-stroke engines

3.4.1 Scavenge air system

The risk analysis required in [1.4] is to cover the possible gas accumulation in a scavenge space.

3.4.2 Crankcase

The risk analysis required in [1.4] is to cover the possible failure of a piston rod stuffing box.

4 Type testing, factory acceptance tests and shipboard trials

4.1 Type Testing

4.1.1 General

Type approval of DF and GF engines is to be carried out in accordance with the provisions of Ch 1, Sec 2, [4], taking into account the requirements of this sub-article.

4.1.2 Type of engine

In addition to the criteria given in Ch 1, Sec 2, [4.1.2], item c), the type of engine is defined by the following:

- gas admission method (cylinder injection after compression stroke, cylinder-individual injection before compression stroke or pre-mixed)
- gas admission valve operation (mechanical or electronically controlled)
- ignition system (pilot injection, spark ignition, glow plug or gas self-ignition)
- ignition system (mechanical or electronically controlled)

Note 1: Cylinder-individual injection before compression stroke may be port injection into the air inlet channel before the cylinder inlet valve, injection into the cylinder before or during compression stroke, or similar arrangements.

4.1.3 Safety precautions

In addition to the safety precautions mentioned in Ch 1, Sec 2, [4.1.3], measures to verify that gas fuel piping on engine is gas tight are to be carried out prior to start-up of the engine.

4.1.4 Test programme

The type testing of the engine is to be carried out in accordance with Ch 1, Sec 2, [4.1.4] taking into account the additional requirements of this Appendix.

The influence of the methane number and LHV of the fuel gas is not required to be verified during the Stage B type tests. It is however to be justified by the engine designer through internal tests or calculations and documented in the type approval test report.

4.1.5 Measurements and records

In addition to the measurements and records required in Ch 1, Sec 2, [4.1.5], the following engine data are to be measured and recorded:

- each fuel index for gas and diesel as applicable (or equivalent reading)
- gas pressure and temperature at the inlet of the gas manifold
- Pilot fuel temperature and pressure (supply or common rail as appropriate)
- gas concentration in the crankcase

Note 1: The gas concentration in the crankcase should normally be measured inside the crankcase or at the crankcase outlet (crankcase vent pipe).

Gas concentration measurements may be carried out as part of Stage A if the method and the results are properly documented.

Additional measurements may be required in connection with the design assessment.

4.1.6 Stage A - internal tests

In addition to tests required in Ch 1, Sec 2, [4.1.6], the following conditions are to be tested:

- DF engines are to run the load points defined in Ch 1, Sec 2, [4.1.6], in both gas and diesel modes (with and without pilot injection in service) as found applicable for the engine type.
- For DF engines with variable liquid / gas ratio, the load tests are to be carried out at different ratios between the minimum and the maximum allowable values.
- For DF engines, switch over between gas and diesel modes are to be tested at different loads.
- The influence of the methane number and LHV of the fuel gas on the engine's maximum continuous power available in gas mode is to be verified

4.1.7 Stage B - witnessed tests

a) General

Gas engines are to undergo the different tests required in Ch 1, Sec 2, [4.1.7].

In case of DF engine:

- all load points must be run in both gas and diesel modes that apply for the engine type as defined by the engine designer

  This independent overspeed protective device has to be tested both in gas and diesel mode (see Ch 1, Sec 2, [4.1.7]), item b).
- For engines with variable liquid / gas ratio, selected load tests are to be carried out at different ratios between the minimum and the maximum allowable values (most relevant and critical loads and ratios should be selected for the test).
- The maximum continuous power available in gas mode (see [3.1.1]) is to be demonstrated.
- Overload testing is not required in gas mode for DF engines, provided that changeover to oil fuel mode is automatically performed in case of overload.
- The load tests are to be carried out in diesel mode and in gas mode at the different percentages of the engine's MCR.

b) Functional tests

In addition to the functional tests required in Ch 1, Sec 2, [4.1.7], item c), the following tests are to be carried out:

- for DF engines, the lowest specified speed is to be verified in diesel mode and gas mode
- for DF engines, switch over between gas and diesel modes are to be tested at different loads
- for DF engines, verification of automatic changeover to diesel mode when the load demand exceeds the maximum continuous power available in gas mode (see [3.1.1]and [3.1.2])
- the efficiency of the ventilation arrangement or other approved principal of the double walled gas piping system is to be verified.

Engines intended to produce electrical power are to be tested as follows:

- capability to take sudden load and loss of load in accordance with the provisions of Ch 1, Sec 2, [2.7.6]
- for GF and premixed engines, the influences of LHV, methane number and ambient conditions on the dynamic load response test results are to be theoretically determined and specified in the test report. Referring to the limitations as specified in [2.1.1], the margin for satisfying dynamic load response is to be determined.

Note 1: For DF engines, switchover to oil fuel during the test is acceptable.

Note 2: Application of electrical load in more than 2 load steps can be permitted in the conditions stated in Ch 1, Sec 2, [2.7.5], item d).

c) Integration tests

GF and DF engines are to undergo integration tests to verify that the response of the complete mechanical, hydraulic and electronic engine system is as predicted for all intended operational modes. The scope of these tests is to be agreed with the Society for selected cases based on the risk analysis required in [1.4], and is to include at least the following incidents:

- failure of ignition (spark ignition or pilot injection systems), both for one cylinder unit and common system failure
- failure of a gas admission valve
- failure of the combustion (to be detected by e.g. misfiring, knocking, exhaust temperature deviation, etc.)
- abnormal gas pressure
- abnormal gas temperature

Note 3: This test may be carried out using a simulation signal of the temperature.

4.1.8 Stage C - Component inspection

Component inspection is to be carried out in accordance with the provisions of Ch 1, Sec 2, [4.1.8]. The components to be inspected after the test run are to include also:

- gas admission valve including pre-chamber as found applicable
- spark igniter (for GF engines)
- pilot fuel injection valve (for DF engines)

4.1.9 Engine type approval certificate

For DF engines, the maximum continuous power available in gas mode is to be specified on the type approval certificate in addition to the maximum continuous rating in diesel mode if differing.

4.2 Factory acceptance test

4.2.1 General

Factory acceptance tests of DF and GF engines are to be carried out in accordance with Ch 1, Sec 2, [4.3], taking into account [4.2.2] to [4.2.5].

For DF engines, the load tests referred to in Ch 1, Sec 2, [4.3.3], item c), are to be carried out in diesel mode and in gas mode at the different percentages of the engine's MCR.

Maximum continuous power available in gas mode is to be demontrated (see [3.1.1]).

4.2.2 Safety precautions

In addition to the safety precautions mentioned in Ch 1, Sec 2, [4.3.1], measures to verify that gas fuel piping on engine is gas tight are to be carried out prior to start-up of the engine.

4.2.3 Records

In addition to the records required in Ch 1, Sec 2, [4.3.3], item b), the following engine data are to be recorded:

- fuel index, both gas and diesel as applicable (or equivalent reading)
- gas pressure and temperature
- Pilot fuel temperature and pressure (supply or common rail as appropriate).

4.2.4 Test loads

Test loads for various engine applications are given in Ch 1, Sec 2, [4.3.3], item c). DF engines are to be tested in both diesel and gas mode as found applicable. In addition the scope of the trials may be expanded depending on the engine application, service experience, or other relevant reasons.

4.2.5 Integration tests

GF and DF engines are to undergo integration tests to verify that the response of the complete mechanical, hydraulic and electronic system is as predicted for all intended operational modes.

The scope of these tests is to be agreed with the Society for selected cases based on the risk analysis required in [1.4] and is to include at least the following incidents:

- failure of ignition (spark ignition or pilot injection systems), for one cylinder unit
- failure of gas admission valve
- failure of the combustion (to be detected by e.g. misfiring, knocking, exhaust temperature deviation, etc.)
- abnormal gas pressure
- abnormal gas temperature

The above tests may be carried out using simulation or other alternative methods, subject to special consideration by the Society.

4.3 Shipboard trials

4.3.1 A leak test is to be carried out for the gas piping system (see NR529 16.7.3.3) after assembly on board.

Shipboard trials are to be carried out in accordance with the provisions of Ch 1, Sec 18, [3.5] considering the additional requirements below.

For DF engines, the test loads required in Ch 1, Sec 18, [3.5.4] are to be carried out in all operating modes (gas mode, diesel mode, etc.) as applicable (see [3.1.1]). The maximum continuous power available in gas mode is to be demonstrated.

Note 1: If a test load is performed in all applicable operation modes without interruption (direct changeover at same power and speed), the duration as required in Ch 1, Sec 18, [3.5.4] may be considered as the total duration demonstrated in all fuel modes. However, demonstration at each mode is not to not be less than one hour

The starting maneuvers required in Ch 1, Sec 18, [3.5.2] are to be carried out in diesel mode and gas mode, if applicable.

For DF engines, automatic switching over to oil fuel mode is to be tested.

Further, manual change over from diesel to gas mode and vice versa is to be tested.

The efficiency of the ventilation arrangement, or other approved principle, of the double walled gas piping system is to be verified.

5 Certification of Engine Components

5.1 General

5.1.1 The principles, definitions, and general requirements of Ch 1, Sec 2, [4.2] apply.

5.2 Additional requirements for DF and GF engines

5.2.1 In addition to those components specified in Ch 1, Sec 2, [4.2], the engine components of DF and GF engines listed in Tab 4 are to be documented as listed in the table

Table 4 : Required documentation for DF and GF engine components

Part	Material properties	Non-destructive examination	Pressure testing	Visual inspection of welds	Component certificate
Gas pipe Low-pressure double walled	W(C+M)	W **(2)** **(6)**	W **(4)**	X	
Single walled Gas pipes	W(C+M)	W **(1)**	W **(4)**	X	SC
High-pressure gas pipes	W(C+M)	W **(1)**	W **(4)**	X	SC
Secondary enclosure for gas pipes	W(C+M)	W **(2)**	W **(3)**	X	
Gas pipe Low-pressure, Flanges **(8)**	W(C+M)	W **(2)** **(6)**		X	
Gas pipe High-pressure, Flanges **(8)**	W(C+M)	W **(1)**		X	SC

(1) 100 % radiographic or ultrasonic inspection of all butt-welded joints (NR529, 16.6.3.1)
(2) 10 % radiographic or ultrasonic inspection of butt-welded joints (NR529 16.6.3.4)
(3) Pressure test at 1,5 x design pressure to ensure gas tight integrity, not less than the expected maximum pressure at gas pipe rupture (as per NR529 16.7.3.4, and 9.8.4)
(4) Pressure test at 1,5 x design pressure
(5) Leak test
(6) If inside diameter > 75 mm or wall thickness > 10 mm: 100% radiographic or ultrasonic inspection of all butt-welded joints (NR529 16.6.3.1)
(7) If nominal diameter > 25 mm
(8) “Flanges” limited to the final connection to the engine

Part	Material properties	Non-destructive examination	Pressure testing	Visual inspection of welds	Component certificate
Gas pipe Low-pressure, Fittings and other components	W(C+M)		W **(4)**	X	
Gas pipe High-pressure, Fittings and other components	W(C+M)		W **(4)**	X	SC
Gas pipe Low-pressure Bodies of valves **(7)**	W(C+M)		W **(4)**		
Gas pipe High-pressure Bodies of valves	W(C+M)		W **(4)**		SC
Gas venting pipes and flanges, build up pressure less than 5,0 bar **(8)**	TR(C+M)	W **(2)**	W **(4)**	X	
Gas venting pipes and flanges, build up pressure at 5,0 bar or more with secondary enclosure **(8)**	TR(C+M)	W **(2)**	W **(4)**	X	
Gas venting pipes and flanges, build up pressure at 5,0 bar or more **(8)**	W(C+M)	W **(1)**	W **(4)**	X	SC
Gas venting pipes Secondary enclosure			W **(5)**	X	

(1) 100 % radiographic or ultrasonic inspection of all butt-welded joints (NR529, 16.6.3.1)
(2) 10 % radiographic or ultrasonic inspection of butt-welded joints (NR529 16.6.3.4)
(3) Pressure test at 1,5 x design pressure to ensure gas tight integrity, not less than the expected maximum pressure at gas pipe rupture (as per NR529 16.7.3.4, and 9.8.4)
(4) Pressure test at 1,5 x design pressure
(5) Leak test
(6) If inside diameter > 75 mm or wall thickness > 10 mm: 100% radiographic or ultrasonic inspection of all butt-welded joints (NR529 16.6.3.1)
(7) If nominal diameter > 25 mm
(8) “Flanges” limited to the final connection to the engine

Appendix 3 Plastic Pipes

1 General

1.1 Application

1.1.1 These requirements are applicable to pipes / piping systems made of plastic or made predominantly of other material than metal.

1.1.2 The use of mechanical joints approved for the use in metallic piping systems only is not permitted.

1.1.3 Piping systems intended for non-essential services are only required to meet the requirements of recognized standards and [2.1.3], item b), [2.5.2], [3.1.2], [3.1.3], [3.1.4], [3.1.5], [3.1.6], [3.1.7] and Article [4].

1.2 Use of plastic pipes

1.2.1 Plastic may be used in piping systems in accordance with the provisions of Ch 1, Sec 10, [2.1.3], provided the following requirements are complied with.

1.2.2 Plastic pipes are to be type approved by the Society.

1.3 Specifications

1.3.1 The specification of the plastic piping is to be submitted in accordance with the provisions of Ch 1, Sec 10, [1.2.2]. It is to comply with a recognised national or international standard approved by the Society. In addition, the requirements stated below are to be complied with.

1.4 Terms and conditions

1.4.1 Plastic(s)

Plastic(s) includes both thermoplastic and thermosetting plastic materials with or without reinforcement, such as PVC and fibre reinforced plastic (FRP). Plastic includes synthetic rubber and materials of similar thermo/mechanical properties.

1.4.2 Pipes / piping systems

Pipes / piping systems means those made of plastic(s) and include the pipes, fittings, system joints, method of joining and any internal or external liners, coverings and coatings required to comply with the performance criteria. Non-metallic flexible hoses are not covered by this Appendix. Requirements for non-metallic flexible hoses pipes are provided by Ch 1, Sec 10, [2.6].

1.4.3 Joint

Joint means the location at which two pieces of pipe or a pipe and a fitting are connected together. The joint may be made by adhesive bonding, laminating, welding, flanges and mechanical joints according to Ch 1, Sec 10, Fig 2.

1.4.4 Fitting

Fittings means bends, elbows, fabricated branch pieces etc. of plastic materials.

1.4.5 Nominal pressure

Nominal pressure means the maximum permissible working pressure which should be determined in accordance with the requirements in [2.1.3].

1.4.6 Design pressure

Design pressure means the maximum working pressure which is expected under operation conditions or the highest set pressure of any safety valve or pressure relief device on the system, if fitted.

1.4.7 Fire endurance

Fire endurance means the capability of piping to maintain its strength and integrity (i.e. capable of performing its intended function) for some predetermined period of time while exposed to fire.

1.4.8 Essential to the safety of ships

Essential to the safety of ships means all piping systems that in the event of failure will pose a threat to personnel and the ship.

1.4.9 Essential services

Essential services are those services essential to propulsion and steering and safety of the ship as specified in Ch 2, Sec 1, [3.11].

Note 1: Examples for piping systems essential to the safety are provided by Tab 1.

2 General requirements

2.1 Strength

2.1.1 The strength of the pipes is to be determined by a hydrostatic test failure pressure of a pipe specimen under the standard conditions: atmospheric pressure equal to 100 kPa, relative humidity 30%, environmental and carried fluid temperature 298 kPa (25°C).

2.1.2 The strength of fittings and joints is to be not less than that of the pipes.

2.1.3 The nominal pressure P_N is to be determined from the following conditions:

a) Internal pressure

For an internal pressure $P_{N\ int}$, the following is to be taken whichever is smaller:

- $P_{N\ int} \leq P_{sth} / 4$
- $P_{N\ int} \leq P_{lth} / 2,5$

where:

P_{sth} : Short-term hydrostatic test pipe failure pressure

P_{lth} : Long-term hydrostatic test pipe failure pressure (>100 000 hours)

b) External pressure $P_{N\ ext}$, (for any installation which may be subject to vacuum conditions inside the pipe or a head of liquid acting on the outside of the pipe; and for any pipe installation required to remain operational in case of flooding damage, as per SOLAS Chapter II-1, Regulation 8-1, as amended, or for any pipes that would allow progressive flooding to other compartments through damaged piping or through open ended pipes in the compartments)

$P_{N\ ext} \leq P_{col} / 3$

where P_{col} is the collapse pressure.

In no case is the pipe collapse pressure to be less than 0,3 MPa

The maximum working external pressure is the sum of the vacuum inside the pipe and the static pressure head outside the pipe.

2.1.4 Notwithstanding the requirements of items a) or b) as applicable, the pipe or pipe layer minimum wall thickness is to follow recognized standards. In the absence of standards for pipes not subject to external pressure, the requirements of item a) above are to be met.

2.1.5 The maximum permissible working pressure is to be specified with due regard for maximum possible working temperatures in accordance with Manufacturer's recommendations.

2.2 Axial strength

2.2.1 The sum of the longitudinal stresses due to pressure, weight and other loads is not to exceed the allowable stress in the longitudinal direction.

2.2.2 In the case of fibre reinforced plastic pipes, the sum of the longitudinal stresses is not to exceed half of the nominal circumferential stress derived from the nominal internal pressure condition (see [2.1.3]).

2.3 Impact resistance

2.3.1 Plastic pipes and joints are to have a minimum resistance to impact in accordance with a recognised national or international standard.

After the test the specimen is to be subjected to hydrostatic pressure equal to 2,5 times the design pressure for at least 1 hour.

2.4 Temperature

2.4.1 The permissible working temperature depending on the working pressure is to be in accordance with Manufacturer's recommendations, but in each case it is to be at least 20ºC lower than the minimum heat distortion/deflection temperature of the pipe material, determined according to ISO 75-2:2013 method A, or equivalent e.g. ASTM D648-18.

The minimum heat distortion/deflection temperature is to be not less than 80ºC.

2.5 Requirements depending on service and/or location

2.5.1 Fire endurance

Pipes and their associated joints and fittings whose integrity is essential to the safety of ships, including plastic piping required by SOLAS Chapter II-2, regulation 21.4, as amended, to remain operational after a fire casualty, are required to meet the minimum fire endurance requirements of Appendix 1 or 2, as applicable, of IMO Resolution A.753(18), as amended.

Unless instructed otherwise by the Flag Administration, fire endurance tests are to be carried out with specimen representative for pipes, joints and fittings:

a) Pipes:
   - for sizes with outer diameter < 200 mm: the minimum outer diameter and wall thickness
   - for sizes with outer diameter ≥ 200 mm: one test specimen for each category of t/D, with:

     D = outer diameter

     t = structural wall thickness.

   A scattering of ±10% for t/D is regarded as the same group. Minimum size approved is equal to the diameter of specimen successfully tested.

b) Joints:

   Each type of joint applicable for applied fire endurance level tested on pipe to pipe specimen.

Note 1: A test specimen incorporating several components of a piping system may be tested in a single test.

Note 2: Test conditions are most demanding for minimum wall thickness and thus larger wall thickness is covered. A key factor determining the fire performance of a pipe component variant is the thickness-to-diameter (t/D) ratio and whether it is larger or smaller than that of the variant which has been fire-tested.

If fire-protective coatings or layers are included in the variant used in the fire test, only variants with the same or greater thickness of protection, regardless of the (t/D) ratio, are to be qualified by the fire test.

Means are to be provided to ensure a constant media pressure inside the test specimen during the fire test as specified in Ch 1, App 1 or Ch 1, App 2 of the IMO Res.A.753(18), as amended. During the test it is not permitted to replace media drained by fresh water or nitrogen.

Depending on the capability of a piping system to maintain its strength and integrity, there exist three different levels of fire endurance for piping systems:

a) Level 1. Piping having passed the fire endurance test specified in Appendix 1 of IMO Resolution A.753(18), as amended, for a duration of a minimum of one hour without loss of integrity in the dry condition is considered to meet level 1 fire endurance standard (L1).

   Level 1W - Piping systems similar to Level 1 systems except these systems do not carry flammable fluid or any gas and a maximum 5% flow loss in the system after exposure is acceptable (L1W).

b) Level 2. Piping having passed the fire endurance test specified in Appendix 1 of IMO Resolution A.753(18), as amended, for a duration of a minimum of 30 minutes in the dry condition is considered to meet level 2 fire endurance standard (L2).

   Level 2W - Piping systems similar to Level 2 systems except a maximum 5% flow loss in the system after exposure is acceptable (L2W).

c) Level 3. Piping having passed the fire endurance test specified in Appendix 2 of IMO Resolution A.753(18) for a duration of a minimum of 30 minutes in the wet condition is considered to meet level 3 fire endurance standard (L3).

Permitted use of piping depending on fire endurance, location and piping system is given in Tab 1.

For Safe Return to Port purposes (SOLAS Chapter II-2, Regulation 21.4), plastic piping can be considered to remain operational after a fire casualty if the plastic pipes and fittings have been tested to L1 standard.

2.5.2 Flame spread

a) All pipes, except those fitted on open decks and within tanks, cofferdams, pipe tunnels, and ducts if separated from accommodation, permanent manned areas and escape ways by means of an A class bulkhead are to have low surface flame spread characteristics not exceeding average values listed in Appendix 3 of IMO Resolution A.753(18), as amended.

b) Surface flame spread characteristics are to be determined using the procedure given in the 2010 FTP Code, Annex 1, Part 5 with regard to the modifications due to the curvilinear pipe surfaces as also listed in Appendix 3 of IMO Resolution A.753(18), as amended.

c) Surface flame spread characteristics may also be determined using the test procedures given in ASTM D635-18, or in other national equivalent standards. Under the procedure of ASTM D635-18 a maximum burning rate of 60 mm/min applies. In case of adoption of other national equivalent standards, the relevant acceptance criteria are to be defined.

2.5.3 Fire protection coating

Where a fire protective coating of pipes and fittings is necessary for achieving the fire endurance level required, it is to meet the following requirements:

- The pipes are generally to be delivered from the manufacturer with the protective coating on.
- The fire protection properties of the coating are not to be diminished when exposed to salt water, oil or bilge slops. It is to be demonstrated that the coating is resistant to products likely to come into contact with the piping.
- In considering fire protection coatings, such characteristics as thermal expansion, resistance against vibrations and elasticity are to be taken into account.
- The fire protection coatings are to have sufficient resistance to impact to retain their integrity.

2.5.4 Electrical conductivity

Where electrical conductivity is to be ensured, the resistance of the pipes and fittings is not to exceed $1 \cdot 10^5$ Ohm/m.

Table 1 : Fire endurance of piping systems

PIPING SYSTEM	LOCATION **(13)**										
	Machinery spaces of category A **(14)**	Other machinery spaces and pump rooms **(15)**	Cargo pump rooms **(16)**	Ro-Ro cargo holds **(17)**	Other dry cargo holds **(18)**	Cargo tanks **(19)**	Fuel oil tanks **(20)**	Ballast water tanks **(21)**	Cofferdams, void spaces, pipe tunnels **(22)**	Accommodation, service and control spaces **(23)**	Open decks **(24)**
CARGO (FLAMMABLE CARGOES WITH FLASH POINT ≤ 60°C)											
Cargo lines	NA	NA	L1	NA	NA	0	NA	0 **(10)**	0	NA	L1 **(2)**
Crude oil washing lines	NA	NA	L1	NA	NA	0	NA	0 **(10)**	0	NA	L1 **(2)**
Vent lines	NA	NA	NA	NA	NA	0	NA	0 **(10)**	0	NA	X
INERT GAS											
Water seal effluent line	NA	NA	0 **(1)**	NA	NA	0 **(1)**	0 **(1)**	0 **(1)**	0 **(1)**	NA	0
Scrubber effluent line	0 **(1)**	0 **(1)**	NA	NA	NA	NA	NA	0 **(1)**	0 **(1)**	NA	0
Main line	0	0	L1	NA	NA	NA	NA	NA	0	NA	L1 **(6)**
Distribution line	NA	NA	L1	NA	NA	0	NA	NA	0	NA	L1 **(2)**
FLAMMABLE LIQUIDS (FLASH POINT > 60°C)											
Cargo lines	X	X	L1	X	X	NA **(3)**	0	0 **(10)**	0	NA	L1
Fuel oil	X	X	L1	X	X	NA **(3)**	0	0	0	L1	L1
Lubricating oil	X	X	L1	X	X	NA	NA	NA	0	L1	L1
Hydraulic oil	X	X	L1	X	X	0	0	0	0	L1	L1
SEA WATER **(1)**											
Bilge main and branches	L1 **(7)**	L1 **(7)**	L1	X	X	NA	0	0	0	NA	L1
Fire main and water-spray	L1	L1	L1	X	NA	NA	NA	0	0	X	L1
Foam system	L1W	L1W	L1W	NA	NA	NA	NA	NA	0	L1W	L1W
Sprinkler system	L1W	L1W	L3	X	NA	NA	NA	0	0	L3	L3
Ballast	L3	L3	L3	L3	X	0 **(10)**	0	0	0	L2W	L2W
Cooling water, essential services	L3	L3	NA	NA	NA	NA	NA	0	0	NA	L2W
Tank cleaning services, fixed machines	NA	NA	L3	NA	NA	0	NA	0	0	NA	L3 **(2)**
Non-essential systems	0	0	0	0	0	NA	0	0	0	0	0
FRESH WATER											
Cooling water, essential services	L3	L3	NA	NA	NA	NA	0	0	0	L3	L3
Condensate return	L3	L3	L3	0	0	NA	NA	NA	0	0	0
Non-essential systems	0	0	0	0	0	NA	0	0	0	0	0
SANITARY, DRAINS, SCUPPERS											
Deck drains (internal)	L1W **(4)**	L1W **(4)**	NA	L1W **(4)**	0	NA	0	0	0	0	0
Sanitary drains (internal)	0	0	NA	0	0	NA	0	0	0	0	0
Scuppers and discharges (over-board)	0 **(1) (8)**	0 **(1) (8)**	0 **(1) (8)**	0 **(1) (8)**	0 **(1) (8)**	0	0	0	0	0 **(1) (8)**	0
SOUNDING, AIR											
Water tanks, dry spaces	0	0	0	0	0	0 **(10)**	0	0	0	0	0
Oil tanks (flash point > 60°C)	X	X	X	X	X	X **(3)**	0	0 **(10)**	0	X	X

MISCELLANEOUS											
Control air	L1 **(5)**	L1 **(5)**	L1 **(5)**	L1 **(5)**	L1 **(5)**	NA	0	0	0	L1 **(5)**	L1 **(5)**
Service air (non-essential)	0	0	0	0	0	NA	0	0	0	0	0
Brine	0	0	NA	0	0	NA	NA	NA	0	0	0
Auxiliary low steam pressure (≤ 0,7 MPa)	L2W	L2W	0 **(9)**	0 **(9)**	0 **(9)**	0	0	0	0	0 **(9)**	0 **(9)**
Central vacuum cleaners	NA	NA	NA	0	NA	NA	NA	NA	0	0	0
Exhaust gas cleaning system effluent line	L3 **(1)**	L3 **(1)**	NA	NA	NA	NA	NA	NA	0	L3 **(1) (11)** NA	0
Urea transfer / supply system (SCR installations)	L1 **(12)**	L1 **(12)**	NA	NA	NA	NA	NA	NA	0	L3 **(1) (11)** NA	0

Note 1:

- L1 : Fire endurance test (appendix 1 of IMO Resolution A.753(18), as amended) in dry conditions, 60 min
- L1W : Fire endurance test (see [2.5.1])
- L2 : Fire endurance test (appendix 1 of IMO Resolution A.753(18), as amended) in dry conditions, 30 min
- L2W : Fire endurance test (see [2.5.1])
- L3 : Fire endurance test (appendix 2 of IMO Resolution A.753(18), as amended) in wet conditions, 30 min
- 0 : No fire endurance test required
- NA : Not applicable
- X : Metallic materials having a melting point greater than 925°C

(1) Where non-metallic piping is used, remote controlled valves to be provided at ship side (valve is to be controlled from outside space).

(2) Remote closing valves to be provided at the cargo tanks.

(3) When cargo tanks contain flammable liquids with flash point > 60 °C, “0” may replace “NA” or “X”.

(4) For drains serving only the space concerned, “0” may replace “L1W”.

(5) When controlling functions are not required by the Rules, “0” may replace “L1”.

(6) For pipes between machinery space and deck water seal, “0” may replace “L1”.

(7) For passenger vessels, “X” is to replace “L1”.

(8) Scuppers serving open decks in positions 1 and 2, as defined in Pt B, Ch 1, Sec 3, are to be “X” throughout unless fitted at the upper end with a means of closing capable of being operated from a position above the freeboard deck in order to prevent downflooding.

(9) For essential services, such as fuel oil tank heating and ship’s whistle, “X” is to replace “0”.

(10) For tankers required to comply with Pt D, Ch 7, Sec 4, [2.1.3], “NA” is to replace “0”.

(11) L3 in service spaces, NA in accommodation and control spaces.

(12) Type Approved plastic piping without fire endurance test (0) is acceptable downstream of the tank valve, provided this valve is metal seated and arranged as fail-to-closed or with quick closing from a safe position outside the space in the event of fire.

(13) For passenger Ships subject to SOLAS Chapter II-2, Regulation 21.4 (Safe return to Port), plastic pipes for services required to remain operational in the part of the ship not affected by the casualty thresholds, such as systems intended to support safe areas, are to be considered essential services. In accordance with IMO Circular MSC.1/Circ.1369, interpretation 12, for Safe Return to Port purposes, plastic piping can be considered to remain operational after a fire casualty if the plastic pipes and fittings have been tested to L1 standard.

(14) Machinery spaces of category A are defined in Ch 4, Sec 1, [2.30.1].

(15) Spaces, other than category A machinery spaces and cargo pumps rooms, containing propulsion machinery, boilers, fuel oil units, steam and internal combustion engines, generators and major electrical machinery, oil filling stations, refrigerating, stabilizing, ventilation and air-conditioning machinery, and similar spaces, and trunks to such spaces.

(16) Spaces containing cargo pumps, and entrances and trunks to such spaces.

(17) Ro-ro cargo spaces and special category spaces are defined in Ch 4, Sec 1, [2].

(18) All spaces other than ro-ro cargo holds used for non-liquid cargo and trunks to such spaces.

(19) All spaces used for liquid cargo and trunks to such spaces.

(20) All spaces used for fuel oil (excluding cargo tanks) and trunks to such spaces.

(21) All spaces used for ballast water and trunks to such spaces.

(22) Cofferdams and voids are those empty spaces between two bulkheads separating two adjacent compartments.

(23) Accommodation spaces, service spaces and control stations are defined in Ch 4, Sec 1, [2].

(24) Open decks are defined in Ch 4, Sec 5, [1.3.3], item b), 2).

3 Material approval and quality control during manufacture

3.1 General

3.1.1 Except as required in [1.1.3], prototypes of pipes and fittings are to be tested to determine short-term and long-term design strength, fire endurance and low surface flame spread characteristics (if applicable), electrical resistance (for electrically conductive pipes), impact resistance in accordance with the requirements of this Appendix.

3.1.2 For prototype testing representative samples of pipes and fittings are to be selected to the satisfaction of the Society.

3.1.3 The Manufacturer is to have quality system that meets ISO 9001:2015 standards or equivalent. The quality system is to consist of elements necessary to ensure that pipes and fittings are produced with consistent and uniform mechanical and physical properties.

3.1.4 Each pipe and fitting is to be tested by the Manufacturer at a hydrostatic pressure not less than 1,5 times the nominal pressure. Alternatively, for pipes and fittings not employing hand lay up techniques, the hydrostatic pressure test may be carried out in accordance with the hydrostatic testing requirements stipulated in the recognised national or international standard to which the pipe or fittings are manufactured, provided that there is an effective quality system in place.

3.1.5 Piping and fittings are to be permanently marked with identification. Identification is to include pressure ratings, the design standards that the pipe or fitting is manufactured in accordance with, and the material of which the pipe or fitting is made.

3.1.6 In case the Manufacturer does not have an approved quality system complying with ISO 9001:2015 or equivalent, pipes and fittings are to be tested in accordance with this Appendix to the satisfaction of the Surveyors for every batch of pipes.

3.1.7 Depending upon the intended application a Society may require the pressure testing of each pipe and/or fitting.

4 Arrangement and installation of plastic pipes

4.1 Supports

4.1.1 Selection and spacing of pipe supports in shipboard systems are to be determined as a function of allowable stresses and maximum deflection criteria. Support spacing is not to be greater than the pipe Manufacturer's recommended spacing. The selection and spacing of pipe supports are to take into account pipe dimensions, length of the piping, mechanical and physical properties of the pipe material, mass of pipe and contained fluid, external pressure, operating temperature, thermal expansion effects, loads due to external forces, thrust forces, water hammer, vibrations, maximum accelerations to which the system may be subjected.

Combination of loads is to be considered.

4.1.2 Each support is to evenly distribute the load of the pipe and its content over the full width of the support. Measures are to be taken to minimise wear of the pipes where they are in contact with the supports.

4.1.3 Heavy components in the piping system such as valves and expansion joints are to be independently supported.

4.2 Expansion

4.2.1 Suitable provision is to be made in each pipeline to allow for relative movement between pipes made of plastic and the steel structure, having due regard to:

- the high difference in the coefficients of thermal expansion
- deformations of the ship’s structure.

4.2.2 Calculations of the thermal expansions are to take into account the system working temperature and the temperature at which the assembly is performed.

4.3 External loads

4.3.1 When installing the piping, allowance is to be made for temporary point loads, where applicable. Such allowance is to include at least the force exerted by a load (person) of 100 kg at mid-span on any pipe of more than 100 mm nominal outside diameter.

4.3.2 Besides for providing adequate robustness for all piping including open-ended piping a minimum wall thickness, complying with [2.1], may be increased taking into account the conditions encountered during service on board ships.

4.3.3 Pipes are to be protected from mechanical damage where necessary.

4.4 Strength of connections

4.4.1 General

a) The strength of connections is not to be less than that of the piping system in which they are installed.

b) Pipes and fittings may be assembled using adhesive-bonded, welded, flanged or other joints.

c) When used for joint assembly, adhesives are to be suitable for providing a permanent seal between the pipes and fittings throughout the temperature and pressure range of the intended application.

d) Tightening of joints, where required, is to be performed in accordance with the manufacturer's instructions.

4.5 Installation of conductive pipes

4.5.1 In piping systems for fluids with conductivity less than 1000 pico siemens per metre (pS/m) such as refined products and distillates use is to be made of conductive pipes.

Regardless of the fluid being conveyed, plastic piping is to be electrically conductive if the piping passes through a hazardous area. The resistance to earth from any point in the piping system is not to exceed 1×10^6 Ohm. It is preferred that pipes and fittings be homogeneously conductive. Pipes and fittings having conductive layers are to be protected against a possibility of spark damage to the pipe wall. Satisfactory earthing is to be provided.

After completion of the installation, the resistance to earth is to be verified. Earthing wires are to be accessible for inspection

4.6 Application of fire protection coatings

4.6.1 Where necessary for the required fire endurance as stated in [2.5.3], fire protection coatings are to be applied on the joints, after performing hydrostatic pressure tests of the piping system.

4.6.2 The fire protection coatings are to be applied in accordance with the manufacturer's recommendations, using a procedure approved in each case.

4.7 Penetration of fire divisions and watertight bulkheads or decks

4.7.1 Where plastic pipes pass through "A" or "B" class divisions, arrangements are to be made to ensure that fire endurance is not impaired. These arrangements are to be tested in accordance with 'Recommendations for Fire Test Procedures for "A", "B" and "F" Bulkheads' 2010 FTP Code, annex 1, part 3, as amended.

4.7.2 When plastic pipes pass through watertight bulkheads or decks, the watertight integrity of the bulkhead or deck is to be maintained. For pipes not able to satisfy the requirements in [2.1.3] item b), a metallic shut-off valve operable from above the freeboard deck should be fitted at the bulkhead or deck.

4.7.3 If the bulkhead or deck is also a fire division and destruction by fire of plastic pipes may cause the inflow of liquid from tanks, a metallic shut-off valve operable from above the freeboard deck is to be fitted at the bulkhead or deck.

4.8 Control during installation

4.8.1 General

a) Installation is to be in accordance with the Manufacturer's guidelines.

b) Prior to commencing the work, joining techniques are to be approved by the Society.

c) The tests and explanations specified in the present Appendix are to be completed before shipboard piping installation commences.

d) The personnel performing this work are to be properly qualified and certified to the satisfaction of the Society.

e) The procedure for making bonds is to be submitted to the Society for qualification. It is to include the following:
   - materials used
   - tools and fixtures
   - joint preparation requirements
   - cure temperature
   - dimensional requirements and tolerances
   - acceptance criteria for the test of the completed assembly

f) Any change in the bonding procedure which will affect the physical and mechanical properties of the joint is to require the procedure to be requalified.

4.8.2 Bonding qualification test

a) A test assembly is to be fabricated in accordance with the procedure to be qualified. It is to consist of at least one pipe-to-pipe joint and one pipe-to-fitting joint.

b) When the test assembly has been cured, it is to be subjected to a hydrostatic test pressure at a safety factor of 2,5 times the design pressure of the test assembly, for not less than one hour. No leakage or separation of joints is allowed. The test is to be conducted so that the joint is loaded in both longitudinal and circumferential directions.

c) Selection of the pipes used for the test assembly is to be in accordance with the following:

- when the largest size to be joined is 200 mm nominal outside diameter or smaller, the test assembly is to be the largest piping size to be joined.
- when the largest size to be joined is greater than 200 mm nominal outside diameter, the size of the test assembly is to be either 200 mm or 25% of the largest piping size to be joined, whichever is the greater.

d) When conducting performance qualifications, each bonder and each bonding operator are to make up test assemblies, the size and number of which are to be as required above.

4.9 Testing after installation on board

4.9.1 Piping systems for essential services are to be subjected to a test pressure not less than 1,5 times the design pressure or 4 bar whichever is greater. Notwithstanding the requirement above, the requirement in [4.9.2] may be applied to open ended pipes (drains, effluent, etc.).

4.9.2 Piping systems for non-essential services are to be checked for leakage under operational conditions.

4.9.3 For piping required to be electrically conductive, earthing is to be checked, and random resistance testing is to be conducted.

5 Test specification for plastic pipes

5.1 Scope

5.1.1 This Article contains requirements for the type approval of plastic pipes. It is applicable to piping systems, including pipe joints and fittings, made predominately of other material than metal.

5.2 Documentation

5.2.1 The following information for the plastic pipes, fittings and joints is to be submitted for consideration and approval:

a) General information

- pipe and fitting dimensions
- maximum internal and external working pressure
- working temperature range
- intended services and installation locations
- the level of fire endurance
- electrically conductive
- intended fluids
- limits on flow rates
- serviceable life
- installation instructions
- details of marking.

b) Drawings and supporting documentation

- certificates and reports for relevant tests previously carried out
- details of relevant standards
- all relevant design drawings, catalogues, data sheets, calculations and functional descriptions
- fully detailed sectional assembly drawings showing pipe, fittings and pipe connections.

c) Materials (as applicable)

- the resin type
- catalyst and accelerator types, and concentration employed in the case of reinforced polyester resin pipes or hardeners where epoxide resins are employed
- a statement of all reinforcements employed where the reference number does not identify the mass per unit area or the tex number of a roving used in a filament winding process, these are to be detailed
- full information regarding the type of gel-coat or thermoplastic liner employed during construction, as appropriate
- cure/post-cure conditions. The cure and post-cure temperatures and times employ resin/reinforcement ratio
- winding angle and orientation
- Joint bonding procedures and qualification tests results, see [4.8.1], item e).

5.3 Testing

5.3.1 Testing is to demonstrate compliance of the pipes, fittings and joints for which type approval is sought with the present Appendix.

Pipes, joints and fittings are to be tested for compliance with the requirements of recognized standards acceptable to the Society. In that order, recommended standards are given in Tab 2 and Tab 3.

Table 2 : Typical requirements for all systems

No.	Test	Typical standard	Notes
1	Internal pressure **(1)**	• the present [2.1.3], item a) • ASTM D 1599-18 • ASTM D 2992-18 • ISO 15493:2003 or equivalent	Top, middle, bottom (of range) Tests are to be carried out on pipe spools made of different pipe sizes, fittings and pipe connections
2	External pressure **(1)**	• the present [2.1.3], item b) • ISO 15493:2003 or equivalent	As above, for straight pipes only
3	Axial strength	the present [2.2]	As above
4	Load deformation	ASTM D 2412-21 or equivalent	Top, middle, bottom (of each pressure range)
5	Temperature limitations	• ISO 75-2:2013 method A GRP piping system: HDT test on each type of resin according to ISO 75-2:2013 method A • Thermoplastic piping systems: - ISO75-1:2020 and ISO 75:2-2013 method A - ISO 306:2022 - Thermoplastic materials - Determination of Vicat softening temperature (VST) - VICAT test according to ISO 2507:1995 • Polyesters with an HDT below 80°C should not be used	Each type of resin
6	Impact resistance	• ISO 9854:1994 • ISO 9653:1998 • ISO 15493:2003 • ASTM D 2444-21 or equivalent	Representative samples of each type of construction
7	Ageing	• Manufacturer's standard • ISO 9142:2003	Each type of construction
8	Fatigue	Manufacturer's standard or service experience	Each type of construction
9	Fluid absorption	ISO 8361:1991	
10	Material compatibility **(2)**	• ASTM C581-20 • Manufacturer's standard	

(1) Test to be witnessed by a Surveyor of the Society.
(2) If applicable.

Table 3 : Typical additional requirements depending on service and/or locations of piping

No	Test	Typical standard	Notes
1	Fire endurance **(1) (2) (3)**	IMO Resolution A.753(18), as amended, Appendix 1, 2	Representative samples of each type of construction and type of pipe connection
2	Flame spread **(1) (2) (3)**	IMO Resolution A.753(18), as amended, Appendix 3	Representative samples of each type of construction
3	Smoke generation **(2) (3)**	IMO Resolution A.753(18), as amended, Appendix 3	Representative samples of each type of construction
4	Toxicity **(2) (3)**	IMO Resolution A.753(18), as amended, Appendix 3	Representative samples of each type of construction
5	Electrical conductivity **(1) (2) (3)**	ASTM F1173-95 or ASTM D 257, NS 6126 section 11.2 or equivalent	Representative samples of each type of construction

(1) Test to be witnessed by a Surveyor of the Society.
(2) If applicable
(3) Optional. However, if the test is not carried out, the range of approved applications for the pipes is to be limited accordingly

Appendix 4 Type Testing Procedure for Crankcase Explosion Relief Valves

1 General

1.1 Scope

1.1.1 This appendix specifies type tests and identifies standard test conditions using methane gas and air mixture to demonstrate the Society requirements are satisfied for crankcase explosion relief valves intended to be fitted to engines and gear cases.

1.1.2 This test procedure is only applicable to explosion relief valves fitted with flame arresters.

Note 1: Where internal oil wetting of a flame arrester is a design feature of an explosion relief valve, alternative testing arrangements that demonstrate compliance with this appendix may be proposed by the manufacturer. The alternative testing arrangements are to be agreed by the Society.

1.2 Recognised standards

1.2.1 The following standards are considered as recognised standards:

- ISO 16852:2016
- ISO/IEC 17025:2017
- ISO 12100:2010
- VDI 3673-1:2002
- IMO MSC/Circ.677 as amended by MSC/Circ.1009 and MSC.1/Circ.1324.

1.3 Purpose

1.3.1 The purpose of type testing crankcase explosion relief valves is fourfold:

- To verify the effectiveness of the flame arrester
- To verify that the valve closes after an explosion
- To verify that the valve is gas/air tight after an explosion
- To establish the level of over pressure protection provided by the valve.

1.4 Approval

1.4.1 The approval of explosion relief valves is at the discretion of the Society based on the appraisal of plans and particulars and the test facility's report of the results of type testing.

2 Type testing procedure

2.1 Test facilities

2.1.1 Test houses carrying out type testing of crankcase explosion relief valves are to meet the following requirements:

a) The test houses where testing is carried out are to be accredited to a National or International Standard, e.g. ISO/IEC 17025:2017, and are to be acceptable to the Society.

b) The test facilities are to be equipped so that they can perform and record explosion testing in accordance with this procedure

c) The test facilities are to have equipment for controlling and measuring a methane gas in air concentration within a test vessel to an accuracy of ± 0.1%

d) The test facilities are to be capable of effective point-located ignition of a methane gas in air mixture

e) The pressure measuring equipment is to be capable of measuring the pressure in the test vessel in at least two positions, one at the valve and the other at the test vessel centre. The measuring arrangements are to be capable of measuring and recording the pressure changes throughout an explosion test at a frequency recognising the speed of events during an explosion. The result of each test is to be documented by video recording and by recording with a heat sensitive camera

f) The test vessel for explosion testing is to have documented dimensions. The dimensions are to be such that the vessel is not "pipe like" with the distance between dished ends being not more than 2.5 times its diameter. The internal volume of the test vessel is to include any standpipe arrangements

g) The test vessel is to be provided with a flange, located centrally at one end perpendicular to the vessel longitudinal axis, for mounting the explosion relief valve.

The test vessel is to be arranged in an orientation consistent with how the valve will be installed in service, i.e., in the vertical plane or the horizontal plane

h) A circular plate is to be provided for fitting between the pressure vessel flange and valve to be tested with the following dimensions:

1) Outside diameter of 2 times the outer diameter of the valve top cover

2) Internal bore having the same internal diameter as the valve to be tested

i) The test vessel is to have connections for measuring the methane in air mixture at the top and bottom

j) The test vessel is to be provided with a means of fitting an ignition source at a position specified in [2.2.3].

k) The test vessel volume is to be as far as practicable, related to the size and capability of the relief valve to be tested. In general, the volume is to correspond to the requirement in Ch 1, Sec 2, [2.3.4], d) for the free area of explosion relief valve to be not less than 115 cm^2/m^3 of crankcase gross volume.

Note 1: This means that the testing of a valve having 1150 cm^2 of free area, would require a test vessel with a volume of 10 m^3.

Note 2: Where the free area of relief valves is greater than 115 cm^2/m^3 of the crankcase gross volume, the volume of the test vessel is to be consistent with the design ratio.

Note 3: In no case is the volume of the test vessel to vary by more than +15% to –15% from the design cm^2/m^3 volume ratio.

2.2 Explosion test process

2.2.1 All explosion tests to verify the functionality of crankcase explosion relief valves are to be carried out using an air and methane mixture with a volumetric methane concentration of 9.5% ±0.5%. The pressure in the test vessel is to be not less than atmospheric and is not to exceed the opening pressure of the relief valve.

2.2.2 The concentration of methane in the test vessel is to be measured at the top and bottom of the vessel and these concentrations are not to differ by more than 0.5%.

2.2.3 The ignition of the methane and air mixture is to be made at the centreline of the test vessel at a position approximately one third of the height or length of the test vessel opposite to where the valve is mounted.

2.2.4 The ignition is to be made using a maximum 100 joule explosive charge.

2.3 Valves to be tested

2.3.1 The valves used for type testing (including testing specified in [2.3.3] are to be selected from the manufacturer's normal production line for such valves by the classification society witnessing the tests.

2.3.2 For approval of a specific valve size, three valves are to be tested in accordance with [2.3.3] and [2.4]. For a series of valves see [2.6].

2.3.3 The valves selected for type testing are to have been previously tested at the manufacturer's works to demonstrate that the opening pressure is in accordance with the specification within a tolerance of ± 20% and that the valve is air tight at a pressure below the opening pressure for at least 30 seconds.

Note 1: This test is to verify that the valve is air tight following assembly at the manufacturer's works and that the valve begins to open at the required pressure demonstrating that the correct spring has been fitted.

2.3.4 The type testing of valves is to recognise the orientation in which they are intended to be installed on the engine or gear case. Three valves of each size are to be tested for each intended installation orientation, i.e. in the vertical and/or horizontal positions.

2.4 Method

2.4.1 The following requirements are to be satisfied at explosion testing:

a) The explosion testing is to be witnessed by a classification society surveyor

b) Where valves are to be installed on an engine or gear case with shielding arrangements to deflect the emission of explosion combustion products, the valves are to be tested with the shielding arrangements fitted

c) Successive explosion testing to establish a valve's functionality is to be carried out as quickly as possible during stable weather conditions

d) The pressure rise and decay during all explosion testing is to be recorded

e) The external condition of the valves is to be monitored during each test for indication of any flame release by video and heat sensitive camera

2.4.2 The explosion testing is to be in three stages for each valve that is required to be approved as being type tested.

a) Stage 1:

Two explosion tests are to be carried out in the test vessel with the circular plate described in [2.1.1] h) fitted and the opening in the plate covered by a 0.05 mm thick polythene film

Note 1: These tests establish a reference pressure level for determination of the capability of a relief valve in terms of pressure rise in the test vessel, see [2.5.1] f).

b) Stage 2:

1) Two explosion tests are to be carried out on three different valves of the same size. Each valve is to be mounted in the orientation for which approval is sought i.e., in the vertical or horizontal position with the circular plate described in [2.1.1] h) located between the valve and pressure vessel mounting flange

2) The first of the two tests on each valve is to be carried out with a 0.05mm thick polythene bag, having a minimum diameter of three times the diameter of the circular plate and volume not less than 30% of the test vessel, enclosing the valve and circular plate. Before carrying out the explosion test the polythene bag is to be empty of air. The polythene bag is required to provide a readily visible means of assessing whether there is flame transmission through the relief valve following an explosion consistent with the requirements of the standards identified in [1.2]

Note 2: During the test, the explosion pressure will open the valve and some unburned methane/air mixture will be collected in the polythene bag. When the flame reaches the flame arrester and if there is flame transmission through the flame arrester, the methane/air mixture in the bag will be ignited and this will be visible.

3) Provided that the first explosion test successfully demonstrated that there was no indication of combustion outside the flame arrester and there are no visible signs of damage to the flame arrester or valve, a second explosion test without the polythene bag arrangement is to be carried out as quickly as possible after the first test. During the second explosion test, the valve is to be visually monitored for any indication of combustion outside the flame arrester and video records are to be kept for subsequent analysis. The second test is required to demonstrate that the valve can still function in the event of a secondary crankcase explosion

4) After each explosion, the test vessel is to be maintained in the closed condition for at least 10 seconds to enable the tightness of the valve to be ascertained. The tightness of the valve can be verified during the test from the pressure/time records or by a separate test after completing the second explosion test

c) Stage 3:

Carry out two further explosion tests as described in Stage 1. These further tests are required to provide an average baseline value for assessment of pressure rise, recognising that the test vessel ambient conditions may have changed during the testing of the explosion relief valves in Stage 2.

2.5 Assessment and records

2.5.1 For the purposes of verifying compliance with the requirements of this Section, the assessment and records of the valves used for explosion testing is to address the following:

a) The valves to be tested are to have evidence of design appraisal/approval by the classification society witnessing tests

b) The designation, dimensions and characteristics of the valves to be tested are to be recorded. This is to include the free area of the valve and of the flame arrester and the amount of valve lift at 0.2bar

c) The test vessel volume is to be determined and recorded

d) For acceptance of the functioning of the flame arrester there is not to be any indication of flame or combustion outside the valve during an explosion test. This should be confirmed by the test laboratory taking into account measurements from the heat sensitive camera

e) The pressure rise and decay during an explosion is to be recorded, with indication of the pressure variation showing the maximum overpressure and steady underpressure in the test vessel during testing. The pressure variation is to be recorded at two points in the pressure vessel

f) The effect of an explosion relief valve in terms of pressure rise following an explosion is ascertained from maximum pressures recorded at the centre of the test vessel during the three stages. The pressure rise within the test vessel due to the installation of a relief valve is the difference between average pressure of the four explosions from Stages 1 and 3 and the average of the first tests on the three valves in Stage 2. The pressure rise is not to exceed the limit specified by the manufacturer

g) The valve tightness is to be ascertained by verifying from the records at the time of testing that an underpressure of at least 0.3bar is held by the test vessel for at least 10 seconds following an explosion. This test is to verify that the valve has effectively closed and is reasonably gas-tight following dynamic operation during an explosion

h) After each explosion test in Stage 2, the external condition of the flame arrester is to be examined for signs of serious damage and/or deformation that may affect the operation of the valve

i) After completing the explosion tests, the valves are to be dismantled and the condition of all components ascertained and documented. In particular, any indication of valve sticking or uneven opening that may affect operation of the valve is to be noted. Photographic records of the valve condition are to be taken and included in the report.

2.6 Design series qualification

2.6.1 The qualification of quenching devices to prevent the passage of flame can be evaluated for other similar devices of identical type where one device has been tested and found satisfactory.

2.6.2 The quenching ability of a flame arrester depends on the total mass of quenching lamellas/mesh. Provided the materials, thickness of materials, depth of lamellas/thickness of mesh layer and the quenching gaps are the same, then the same quenching ability can be qualified for different sizes of flame arresters satisfying:

$$\frac{n_1}{n_2} = \sqrt{\frac{S_1}{S_2}}$$

and

$$\frac{A_1}{A_2} = \frac{S_1}{S_2}$$

where:

n_1 : total depth of flame arrester corresponding to the number of lamellas of size 1 quenching device for a valve with a relief area equal to S_1

n_2 : total depth of flame arrester corresponding to the number of lamellas of size 2 quenching device for a valve with a relief area equal to S_2

A_1 : free area of quenching device for a valve with a relief area equal to S_1

A_2 : free area of quenching device for a valve with a relief area equal to S_2

2.6.3 The qualification of explosion relief valves of larger sizes than that which has been previously satisfactorily tested in accordance with [2.4] and [2.5] can be evaluated where valves are of identical type and have identical features of construction subject to the following:

a) The free area of a larger valve does not exceed three times + 5% that of the valve that has been satisfactorily tested

b) One valve of the largest size, see a), requiring qualification is subject to satisfactory testing required by [2.3.3] and [2.4.2], b) except that a single valve will be accepted in [2.4.2], b), 1) and the volume of the test vessel is not to be less than one third of the volume required by [2.1.1], k)

c) The assessment and records are to be in accordance with [2.5]noting that [2.5.1], f) will only be applicable to Stage 2 (see [2.4.2]for a single valve.

2.6.4 The qualification of explosion relief valves of smaller sizes than that which has been previously satisfactorily tested in accordance with [2.4] and [2.5] can be evaluated where valves are of identical type and have identical features of construction subject to the following:

a) The free area of a smaller valve is not less than one third of the valve that has been satisfactorily tested

b) One valve of the smallest size, subject to a), requiring qualification is subject to satisfactory testing required by [2.3.3] and [2.4.2], b) except that a single valve will be accepted in [2.4.2], b), 1) and the volume of the test vessel is not to be more than the volume required by [2.1.1], k)

c) The assessment and records are to be in accordance with article [2.5] noting that [2.5.1], f) will only be applicable to Stage 2 for a single valve.

2.7 Report

2.7.1 The test facility is to deliver a full report that includes the following information and documents:

- Test specification
- Details of test pressure vessel and valves tested
- The orientation in which the valve was tested, (vertical or horizontal position).
- Methane in air concentration for each test
- Ignition source
- Pressure curves for each test
- Video recordings of each valve test
- The assessment and records stated in [2.5].

Appendix 5 Type Approval of Mechanical Joints

1 General

1.1 Scope

1.1.1 This specification describes the type testing condition for type approval of mechanical joints intended for use in marine piping systems. Conditions outlined in these requirements are to be fulfilled before Type Approval Certificates are issued.

1.1.2 The Society may accept alternative testing in accordance with national or international standards where applicable to the intended use and application.

1.1.3 This specification is applicable to mechanical joints defined in Ch 1, Sec 10, [2.4.5] including compression couplings and slip-on joints of different types for marine use.

1.2 Documentation

1.2.1 Following documents and information are to be submitted by Manufacturer for assessment and/or approval:

- product quality assurance system implemented
- complete description of the product
- typical sectional drawings with all dimensions necessary for evaluation of joint design
- complete specification of materials used for all components of the assembly
- proposed test procedure as required in [2] and corresponding test reports or other previous relevant tests
- initial information:
  - maximum design pressures (pressure and vacuum)
  - maximum and minimum design temperatures
  - conveyed media
  - intended services
  - maximum axial, lateral and angular deviation, allowed by manufacturer
  - installation details.

1.3 Materials

1.3.1 The materials used for mechanical joints are to comply with the requirements of Ch 1, Sec 10, [2.4.5].

The manufacturer has to submit evidence to substantiate that all components are adequately resistant to working the media at design pressure and temperature specified.

2 Testing, procedures and requirements

2.1 Aim of the tests

2.1.1 The aim of tests is to demonstrate ability of the pipe joints to operate satisfactory under intended service conditions. The scope and type of tests to be conducted e.g. applicable tests, sequence of testing, and the number of specimen, is subject to approval and will depend on joint design and its intended service in accordance with the requirements of Ch 1, Sec 10.

2.2 Test fluid

2.2.1 Unless otherwise specified, the water or oil as test fluid is to be used.

2.3 Test program

2.3.1 Testing requirements for mechanical joints are to be as indicated in Tab 1.

2.4 Selection of test specimen

2.4.1 Test specimens are to be selected from production line or at random from stock.

Where there is a variety of size of joints requiring approval, a minimum of three separate sizes, representative of the range, from each type of joint to be tested in accordance with in Tab 1.

2.5 Mechanical joint assembly

2.5.1 Assembly of mechanical joints is to consist of components selected in accordance with [2.4.1] and the pipe sizes appropriate to the design of the joints.

2.5.2 Where pipe material would affect the performance of mechanical joints, the selection of joints for testing is to take the pipe material into consideration.

2.5.3 Where not specified, the length of pipes to be connected by means of the joint to be tested is to be at least five times the pipe diameter. Before assembling the joint, conformity of components to the design requirements is to be verified. In all cases the assembly of the joint is to be carried out only according to the manufacturer's instructions. No adjustment operations on the joint assembly, other than that specified by the manufacturer, are permitted during the test.

2.6 Test results acceptance criteria

2.6.1 Where a mechanical joint assembly does not pass all or any part of the tests in Tab 1, two assemblies of the same size and type that failed are to be tested and only those tests which the mechanical joint assembly failed in the first instance, are to be repeated. In the event where one of the assemblies fails the second test, that size and type of assembly is to be considered unacceptable.

2.6.2 The methods and results of each test are to be recorded and reproduced as and when required.

Table 1 : Tests for mechanical joints

Tests		Type of mechanical joint			Notes and references
		Compression couplings and pipes unions	Slip on joints		
			Grid type and machine grooved type	Slip type	
1	Tightness test	+	+	+	[2.7.1]
2	Vibration (fatigue) test	+	+	–	[2.7.2]
3	Pressure pulsation test **(1)**	+	+	–	[2.7.3]
4	Burst pressure test	+	+	+	[2.7.4]
5	Pull-out test	+	+	–	[2.7.5]
6	Fire endurance test	+ **(3)**	+	+	[2.7.6] if required by Ch 1, Sec 10, Tab 17
7	Vacuum test	+ **(3)**	+	+	[2.7.7] for suction line only
8	Repeated assembly test	+ **(2)**	+	–	[2.7.8]

+ : test is required
– : test is not required
(1) for use in all class I and II systems and those class III systems where pressure pulsation other than water hammer is expected
(2) except permanent joint type (e.g. press type and swage type)
(3) except joints with metal-to-metal tightening surfaces

2.7 Methods of tests

2.7.1 Tightness test

In order to ensure correct assembly and tightness of the joints, all mechanical joints are to be subjected to a tightness test, as follows:

a) The mechanical joint assembly test specimen is to be connected to the pipe or tubing in accordance with the requirements of [2.5] and the manufacturers instructions, filled with test fluid and de-aerated.

   Mechanical joints assemblies intended for use in rigid connections of pipe lengths, are not to be longitudinally restrained.

   The pressure inside the joint assembly is to be slowly increased to 1,5 times of design pressure. This test pressure is to be retained for a minimum period of 5 minutes.

   In the event of a drop in pressure or visible leakage, the test (including fire test) is to be repeated for two further specimens.

   If during the repeat test one test piece fails, the coupling is regarded as having failed.

   Other alternative tightness test procedure, such as pneumatic test, may be accepted.

b) For compression couplings a static gas pressure test is to be carried out to demonstrate the integrity of the mechanical joints assembly for tightness under the influence of gaseous media. The pressure is to be raised to maximum pressure or 70 bar whichever is less.

c) Where the tightness test is carried out using gaseous media as permitted in a) above, then the static pressure test mentioned in b) above need not be carried out.

2.7.2 Vibration (fatigue) test

In order to establish the capability of the mechanical joint assembly to withstand fatigue, which is likely to occur due to vibrations under service conditions, mechanical joints assemblies are to be subject to the following vibration test.

Conclusions of the vibration tests should show no leakage or damage.

a) Testing of compression couplings and pipe unions

Compression couplings and pipe unions intended for use in rigid pipe connections are to be tested as follows. Rigid connections are joints, connecting pipe length without free angular or axial movement.

Two lengths of pipe are to be connected by means of the joint to be tested. One end of the pipe is to be rigidly fixed while the other end is to be fitted to the vibration rig. The test rig and the joint assembly specimen being tested are to be arranged as shown in Fig 1.

Figure 1 : Testing of compression couplings and pipe unions

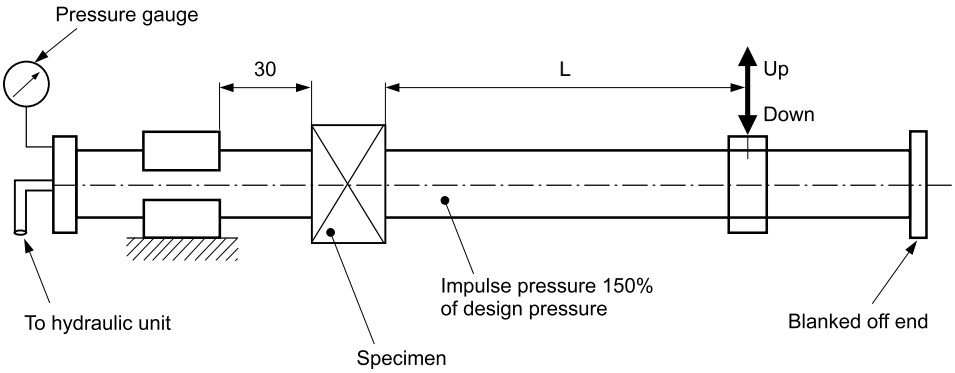

The joint assembly is to be filled with test fluid, de-aerated and pressurised to the design pressure of the joint.

Pressure during the test is to be monitored. In the event of a drop in the pressure and visible leakage, the test is to be repeated as described in [2.6].

Visual examination of the joint assembly is to be carried out.

Re-tightening may be accepted once during the first 1000 cycles.

Vibration amplitude is to be within 5% of the value calculated from the following formula:

$$A = \frac{2SL^2}{3ED}$$

where:

A : Single amplitude, in mm

L : Length of the pipe, in mm

S : Allowable bending stress, in N/mm^2, based on 0,25 of the yield stress

E : Modulus of elasticity of tube material (for mild steel, E = 210 kN/mm^2)

D : Outside diameter of tube, in mm.

Test specimen is to withstand not less than 10^7 cycles with frequency 20 - 50 Hz without leakage or damage.

b) Grip type and machine grooved type joints

Grip type joints and other similar joints containing elastic elements are to be tested in accordance with the following method.

A test rig of cantilever type used for testing fatigue strength of components may be used. The test specimen being tested is to be arranged in the test rig as shown in Fig 2.

Figure 2 : Grip type and machine grooved type joints

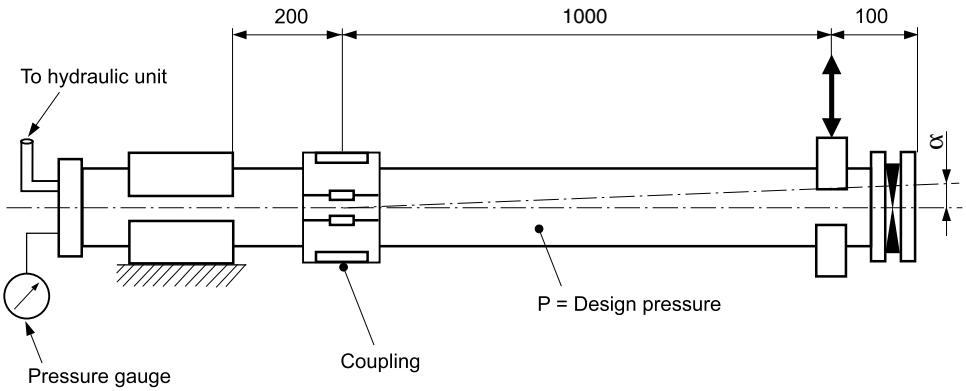

Two lengths of pipes are to be connected by means of joint assembly specimen to be tested. One end of the pipe is to be rigidly fixed while the other end is to be fitted to the vibrating element on the rig. The length of pipe connected to the fixed end should be kept as short as possible and in no case exceed 200 mm.

Mechanical joint assemblies are not to be longitudinally restrained.

The assembly is to be filled with test fluid, de-aerated and pressurized to the design pressure of the joint. Preliminary angle of deflection of pipe axis is to be equal to the maximum angle of deflection, recommended by the manufacturer. The amplitude is to be measured at 1m distance from the center line of the joint assembly at free pipe end connected to the rotating element of the rig (see Fig 2).

Parameters of testing are to be as indicated as per Tab 2 and to be carried out on the same assembly.

Pressure during the test is to be monitored. In the event of a drop in the pressure and visual signs of leakage the test is to be repeated as described in [2.6]. Visual examination of the joint assembly is to be carried out for signs of damage which may eventually cause leakage.

Table 2 : Parameters of testing

Number of cycles	Amplitude, mm	Frequency, Hz
$3 \cdot 10^6$	± 0,06	100
$3 \cdot 10^6$	± 0,50	45
$3 \cdot 10^6$	± 1,50	10

2.7.3 Pressure pulsation test

In order to determine capability of mechanical joint assembly to withstand pressure pulsation likely to occur during working conditions, joint assemblies intended for use in rigid connections of pipe lengths, are to be tested in accordance with the following method.

The mechanical joint test specimen for carrying out this test may be the same as that used in the test in [2.7.1], item a), provided it passed that test.

The vibration test in [2.7.2] and the pressure pulsation test are to be carried out simultaneously for compression couplings and pipe unions.

The mechanical joint test specimen is to be connected to a pressure source capable of generating pressure pulses of magnitude as shown in Fig 3.

Impulse pressure is to be raised from 0 to 1,5 times the design pressure of the joint with a frequency equal to 30-100 cycles per minute. The number of cycles is not to be less than 5×10^5.

The mechanical joint is to be examined visually for sign of leakage or damage during the test.

Figure 3 : Impulse pressure diagram

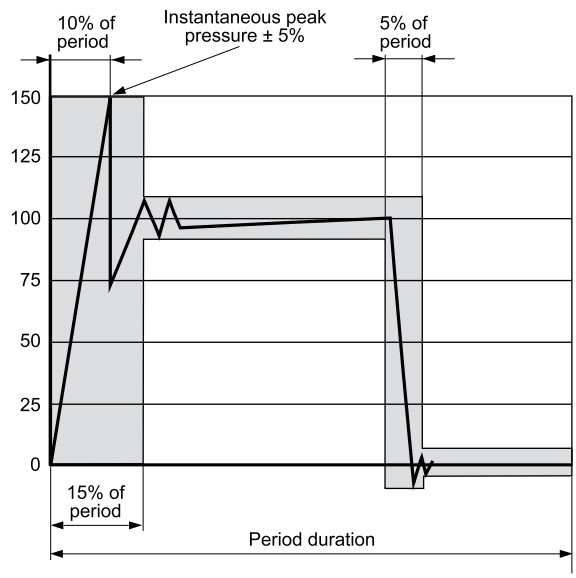

2.7.4 Burst pressure test

In order to determine the capability of the mechanical joint assembly to withstand a pressure as stated by Ch 1, Sec 10, [2.4.5], item d), the following burst test is to be carried out.

Mechanical joint test specimen is to be connected to the pipe or tubing in accordance with the requirements of [2.5] filled with test fluid, de-aerated and pressurized to test pressure with an increasing rate of 10% per minute of test pressure. The mechanical joint assembly intended for use in rigid connections of pipe lengths is not to be longitudinally restrained.

Duration of this test is not to be less than 5 minutes at the maximum pressure.

Where considered convenient, the mechanical joint test specimen used in the tightness test in [2.7.1], may be used for the burst test provided it passed the tightness test.

The specimen may exhibit a small deformation whilst under test pressure, but no leakage or visible cracks are permitted.

2.7.5 Pull-out test

In order to determine the ability of a mechanical joint assembly to withstand the axial loading likely to be encountered in service without the connecting pipe becoming detached, following pullout test is to be carried out.

Pipes of suitable length are to be fitted to each end of the mechanical joints assembly test specimen. The test specimen is to be pressurized to design pressure. When pressure is attained, an external axial load is to be imposed with a value calculated using the following formula:

$$L = \frac{\pi}{4} D^2 p$$

where:

D : Pipe outside diameter, in mm

p : Design pressure, in N/mm^2

L : Applied axial load, in N.

The pressure and axial load are to be maintained for a period of 5 minutes.

During the test, pressure is to be monitored and relative movement between the joint assembly and the pipe measured.

The mechanical joint assembly is to be visually examined for drop in pressure and signs of leakage or damage.

There is to be no movement between the mechanical joint assembly and the connecting pipes.

2.7.6 Fire endurance test

In order to establish capability of the mechanical joints to withstand effects of fire which may be encountered in service, mechanical joints are to be subjected to a fire endurance test. The fire endurance test is to be conducted on the selected test specimens as per the following standards.

- ISO19921:2005 - Ships and marine technology – Fire resistance of metallic pipe components with resilient and elastomeric seals – Test methods
- ISO19922:2005 - Ships and marine technology – Fire resistance of metallic pipe components with resilient and elastomeric seals – Requirements imposed on the test bench.

Clarifications to the standard requirements in ISO19921:2005, paragraphs 7.2, 7.4, 7.6 and 7.7:

a) If the fire test is conducted with circulating water at a pressure different from the design pressure of the joint (however of at least 5 bar) the subsequent pressure test is to be carried out to 1,5 times the design pressure.

b) If the fire test is required in Ch 1, Sec 10, Tab 17 to be “8 min dry + 22 min wet” or “30 min dry”, i.e. conducted for a period of time without circulating of water, the following test conditions apply:

   - Test condition “8 min dry + 22 min wet”: The test piece is not required to be rinsed with the test medium (water) in preparation for the test as required in Paragraph 7.2 of ISO19921:2005. The exposure to fire is to be started and continued for 8 minutes with the sample dry; after 8 minutes of dry test condition the piping system is to be filled with water and test pressure is to be increased up to at least 5 bar within 2 minutes, then maintained to at least 5 bar. After further 22 minutes (i.e. 30 minutes from initial exposure to fire) the exposure to fire is to be stopped and a hydrostatic pressure test as specified in item a) is to be carried out.
   - Test condition “30 min dry”: The exposure to fire is to be started and continued for 30 minutes with the sample dry. After 30 minutes the exposure to fire is to be stopped and a hydrostatic pressure test as specified in item a) is to be carried out.

   For fire tests in dry condition the pressure inside the test specimen is to be monitored for a rise due to heating of the enclosed air. Means of pressure relief are to be provided where deemed necessary.

   High pressures created during this test can result in failure of the test specimen. Precautions are to be taken to protect personnel and facilities.

   Paragraph 7.5 of ISO 19921:2005 does not apply to the dry tests and no forced air circulation is to be arranged.

   For fire endurance test requiring exposure time greater than 30 minutes test conditions are adjusted to meet the extended required total exposure time. In all cases for dry-wet test the minimum dry test exposure time is 8 minutes.

c) A selection of representative nominal bores may be tested in order to evaluate the fire resistance of a series or range of mechanical joints of the same design. When a mechanical joint of a given nominal bore (D_n) is so tested then other mechanical joints falling in the range D_n to $2 \cdot D_n$ (both inclusive) are considered accepted.

d) Alternative test methods and/or test procedures considered to be at least equivalent may be accepted at the discretion of the Society in cases where the test pieces are too large for the test bench and cannot be completely enclosed by the flames.

e) Where thermal insulation is acceptable as a means of providing fire resistance, the following requirements apply:
   - Thermal insulation materials applied on couplings are to be non-combustible according to ISO1182:2010 as required by the Fire Test Procedures Code as defined in Ch 4, Sec 1, [2.22]. Precautions are to be taken to protect the insulation from being impregnated with flammable oils.
   - At least the fire endurance and the vibration testing in Tab 1 are to be carried out with thermal insulation in place.
   - A service restriction is to be stated on the type approval certificate that the mechanical joints are to be fitted with thermal insulation during the installation in cases where the mechanical joints are used where fire resistance is required, unless mechanical joints are delivered already fitted with thermal insulation before installation.

2.7.7 Vacuum test

In order to establish the capability of the mechanical joint assembly to withstand internal pressures below atmospheric, similar to the conditions likely to be encountered under service conditions, the following vacuum test is to be carried out.

The mechanical joint assembly is to be connected to a vacuum pump and subjected to a pressure of 170 mbar absolute. Once this pressure is stabilized, the specimen under test is to be isolated from the vacuum pump and the pressure is to be maintained for a period of 5 minutes.

No internal pressure rise is permitted.

2.7.8 Repeated assembly test

The mechanical joint test specimen is to be dismantled and reassembled 10 times in accordance with manufacturers instructions and then subjected to a tightness test as defined in [2.7.1].

Appendix 6 Special Approval of Alloy Steel used for Intermediate Shaft Material

1 General

1.1 Application

1.1.1 This Appendix applies to the approval of alloy steel which has a minimum specified tensile strength greater than 800 N/mm^2, but less than 950 N/mm^2 intended for use as intermediate shaft material.

1.2 Torsional fatigue test

1.2.1 A torsional fatigue test is to be performed to verify that the material exhibits similar fatigue life as conventional steels. The torsional fatigue strength of said material is to be equal to or greater than the permissible torsional vibration stress τ_C given by the formula of τ_1 in Ch 1, Sec 9, [3.4.2], item b).

The test is to be carried out with notched and unnotched specimens respectively. For calculation of the stress concentration factor of the notched specimen, fatigue strength reduction factor β should be evaluated in consideration of the severest torsional stress concentration in the design criteria.

Note 1: The stress concentration factor (scf) at the end of slots can be determined by means of the following empirical formulae:

$$scf = \alpha_{t(hole)} + 0{,}8\,\frac{(l-e)/d}{\sqrt{\left(1-\frac{d_i}{d}\right)\frac{e}{d}}}$$

This formula applies to:

- slots at 120 or 180 or 360 degrees apart
- slots with semicircular ends. A multi-radii slot end can reduce the local stresses, but this is not included in this empirical formula
- slots with no edge rounding (except chamfering), as any edge rounding increases the scf slightly.

where:

l : Slot length

e : Slot width

d : Shaft outside diameter

d_i : Shaft inside diameter

$\alpha_{t(hole)}$: Stress concentration of radial holes (in this context e = hole diameter) and can be determined as:

$$\alpha_{t(hole)} = 2{,}3 - 3\frac{e}{d} + 15\left(\frac{e}{d}\right)^2 + 10\left(\frac{e}{d}\right)^2\left(\frac{d_i}{d}\right)^2$$

or simplified to $\alpha_{t(hole)} = 2{,}3$

For unnotched specimen, scf = 1

1.2.2 Test conditions

Test conditions are to be in accordance with Tab 1. Mean surface roughness, in µm, is to be less than 0,2 Ra with the absence of localised machining marks verified by visual examination at low magnification (x20) as required by Section 8.4 of ISO 1352:2011.

Test procedures are to be in accordance with Section 10 of ISO 1352:2011.

Table 1 : Test condition

Loading type	Torsion
Stress ratio	R = –1
Load waveform	Constant-amplitude sinusoidal
Evaluation	S-N curve
Number of cycles for test termination	1 x 10^7 cycles

1.2.3 Acceptance criteria

Measured high-cycle torsional fatigue strength τ_{C1} and low-cycle torsional fatigue strength τ_{C2} are to be equal to or greater than the values given by the following formulae:

$$\tau_{C1} \geq \tau_{C,\lambda=0} = \frac{\sigma_B + 160}{6} C_K C_D$$

$$\tau_{C2} \geq 1{,}7 \frac{1}{\sqrt{C_K}} \tau_{C1}$$

where:

C_K : Factor for the particular shaft design features, see Ch 1, Sec 9, Tab 1

C_D : Size factor, see Ch 1, Sec 9, [3.2.2]

σ_B : Specified minimum tensile strength in N/mm² of the shaft material.

1.3 Cleanliness requirements

1.3.1 The steels are to have a degree of cleanliness as shown in Tab 2 when tested according to ISO 4967:2013 method A. Representative samples are to be obtained from each heat of forged or rolled products.

The steels are generally to comply with the minimum requirements of NR216, Ch 5, Sec 3, Tab 1, with particular attention given to minimising the concentrations of sulphur, phosphorus and oxygen in order to achieve the cleanliness requirements. The specific steel composition is required to be approved by the Society.

1.4 Inspection

1.4.1 The ultrasonic testing required by NR216, Ch 5, Sec 1, [10.3.1] is to be carried out prior to acceptance. The acceptance criteria are to be in accordance with IACS Recommendation No. 68 or a recognized national or international standard.

Table 2 : Cleanliness requirements

Inclusion group	Series	Limiting chart diagram index I
Type A	Fine	1,0
	Thick	1,0
Type B	Fine	1,5
	Thick	1,0
Type C	Fine	1,0
	Thick	1,0
Type D	Fine	1,0
	Thick	1,0
Type DS	–	1,0

Appendix 7 Exhaust Gas Back Pressure Analysis

1 General

1.1 Scope

1.1.1 This Appendix provides guidance regarding the exhaust gas back pressure analysis to be submitted to justify exhaust systems connections without forced ventilation as per Ch 1, Sec 11, [2.4.1], when an exhaust gas pollution prevention system is installed.

1.2 Required analysis

1.2.1 Calculation cases

A dedicated exhaust gas back pressure analysis is to be submitted for each exhaust gas pollution prevention system installation on-board.

1.2.2 Conclusion of the back pressure assessment

The back pressure created by the exhaust gas pollution prevention system is to be determined for each case, with a view to ensure that the specific equipment is compatible with an interconnected exhaust gas piping system without forced ventilation (spray, packing, etc.).

The back pressure calculation is to demonstrate that the diesel engines associated with the exhaust gas pollution prevention system are capable of being operated within the limits specified by the engine manufacturer.

Note 1: Particular attention is to be paid to the part of the piping system between isolating valves and exhaust gas pollution prevention system line outlet due to the fact that there is a reduction of flow circulation and altered temperature conditions. Moisture issues are to be taken into account during material selection of the exhaust piping, in order to avoid any premature corrosion.

1.3 Input data

1.3.1 The particulars of each engine type are to be documented and explained:

- Engine type
- Number of turbochargers
- Exhaust gas temperature at turbocharger outlet
- Exhaust gas temperature after boiler / SCR / silencer and/or any equipment in the exhaust gas line (as applicable)
- Total exhaust gas quantity
- Engine manufacturer maximum permissible pressure drop
- Exhaust gas pipe diameter and length after turbocharger
- Exhaust gas pipe diameter and length at manifold
- Exhaust gas pipe diameter and length after manifold
- Exhaust gas pipe diameter and length before boiler / SCR / silencer and/or any equipment in the exhaust gas line (as applicable)
- Exhaust gas pipe diameter and length after Boiler / SCR / silencer and/or any equipment in the exhaust gas line (as applicable)
- Exhaust gas pipe diameter and length after exhaust gas pollution prevention system

1.3.2 Ambient conditions

Ambient conditions corresponding to the ship operation, in particular summer and winter conditions as well as area of navigation are to be taken into consideration for the back pressure calculation.

1.3.3 A general description of the exhaust gas piping and exhaust gas pollution prevention system with the applicable limitations and ambient conditions is to be detailed in each case.

1.4 Exhaust gas back pressure assessment

1.4.1 General

The analysis is to detail the pressure losses along the exhaust lines.The total pressure loss is to be calculated for each possible exhaust line configuration depending on the number of engines connected to the exhaust gas pollution prevention system.

In addition, the following pressure losses are to be detailed individually:

- pressure losses along the exhaust gas pollution prevention system line
- pressure losses along lines with components other than exhaust gas pollution prevention system such as silencer, exhaust gas boiler, SCR etc

1.4.2 The calculation methodology is to be described with detailed formulas and related assumptions and/or approximations.

1.4.3 CFD simulation

The Society reserves the right to require a CFD simulation for each case near the limit of engine manufacturer maximum permissible pressure drop to validate the installation of such design on board.

Appendix 8 Type Testing Procedure of Explosion Relief Devices for Combustion Air Inlet and Exhaust Gas Manifolds of I.C. Engines Using Gas as Fuel

1 General

1.1 Scope

1.1.1 The purpose of this appendix is to specify testing procedure for explosion relief devices for combustion air inlet manifold and exhaust gas manifold of internal combustion engines using gas as fuel.

1.1.2 This appendix is dealing with engines using natural gas as only fuel or dual fuel engines using diesel oil and natural gas as fuel.

1.2 Definitions

1.2.1 Definitions addressing gas as fuel as given in Ch 1, App 2, apply.

1.2.2 Explosion relief device (ERD)

Explosion relief device (ERD) means a device to protect a component against a determined overpressure in the event of a gas explosion. The device is fitted with a flame arrester and may be a valve, a rupture disc or other, as applicable.

1.3 Documentation to be submitted

1.3.1 List of documents to be provided for approval before testing related to ERD

- Drawings (sectional drawings, details, assembly etc.)
- Specification data sheet including operating conditions and design limits such as:
  - maximum permissible operating pressure, resulting from maximum charging air or exhaust gas back pressure
  - maximum permissible operating temperature, resulting from maximum charging air or exhaust gas temperature
  - static opening pressure, resulting from maximum charging air or exhaust gas back pressure
  - maximum explosion pressure, i.e. maximum pressure that the device can withstand
  - geometric relief area
- Product marking
- Installation and operation manual
- Test program
- Specification of test vessel
- Type range and operating conditions encompassed for the type approval (see [2.1.3]).

1.3.2 List of documents to be provided for approval after testing related to ERD

A complete test report has to be submitted to the Society for:

- The demonstration of opening pressure (see [2.2]) and
- The explosion test (see [2.3]).

The reports shall include respective information according to the requirements in Article [2], as applicable:

- Test specimens
- Test facility, including measuring equipment and test vessel
- Measuring results (pressures, temperatures, flame velocities, volumetric methane concentration, ambient conditions etc.)
- Video documentation of explosion tests
- Photo documentation of ERD components.

2 Tests

2.1 Test specimens of ERD

2.1.1 The ERD used for the explosion test is to be selected from the manufacturer's production line by a representative of the Society:

- As a finished certified component itself, or
- On samples taken from earlier stages in the production of the component, when applicable.

2.1.2 If necessary, an additional ERD may need to be selected for the demonstration of the opening pressure. The selected ERD has to be clearly marked.

2.1.3 If applicable, the selected ERD shall be representative for the type range and operating conditions, for example:

- Kind of ERD (valve, rupture disc, etc.)
- Mounting orientation (vertical, horizontal)
- Design of ERD (e.g., spring design, sealing)
- Design of flame arrester
- ERD intended to be fitted to the air inlet or exhaust gas manifold of an engine having a turbocharger with characteristics as per the testing conditions in [2.3.2].

The selection of the representative ERD is subject to approval by the Society.

2.2 Test for Demonstration of opening pressure

2.2.1 The ERD which has been selected is to be subjected to a pressure test at the manufacturer's works to demonstrate that the static opening pressure is kept within the manufacturer's specification and that the ERD is air tight at the maximum permissible operating pressure for at least 30 seconds.

2.3 Explosion test

2.3.1 Test facility

a) The test facilities are to be accredited to a national or international standard, e.g. ISO/IEC 17025:2017, and are to be acceptable to the Society.

b) The test facilities are to be equipped so that they can perform and record explosion testing in accordance with this procedure.

c) The test facilities are to have equipment for controlling and measuring a methane gas concentration within a test vessel to an accuracy of ± 0.1%.

d) The test facilities are to be capable of effective point-located ignition of a methane/air mixture.

e) The test facility arrangements are to be capable of measuring and recording the pressure changes throughout an explosion test at a frequency recognizing the speed of the events during an explosion (10 kHz or above).

f) The explosion test (see [2.3.5]) is to be documented by high speed (250 frames/s or above) video recording. The video recording shall be provided with a time stamp.

2.3.2 Test vessel

a) The test vessel is a simplified model of the air inlet or exhaust gas manifold. The free area of the connected turbo charger (compressor or turbine wheel) is to be considered.

The test vessel shall comply with the following requirements:

- The shape of the test vessel is to correspond to a pipe with L/D ≥ 10.
- The test vessel is to be equipped with a rupture disc at one front end to simulate the turbo charger. The relief area of the rupture disc shall be in relationship to the test vessel diameter based on turbocharger manufacturer data for an equivalent free area of compressor or turbine wheel. The opening pressure shall be ± 10% of the static opening pressure of the ERD.
- The volume of the test vessel is to comply with the specific relief area of the ERD of 700 cm^2/m^3 ± 15%.
- The test vessel is to be provided with all necessary flanges and connection to mount the ERD in the intended position, to mount a rupture disc as turbo charger simulation, to connect the Methane-air mixture supply and the measurement equipment.
- The ignition is to be made at the middle of the test vessel.
- The test vessel is to be designed to verify a homogeneous air / methane mixture inside the vessel.
- The test vessel is to have connections for measuring the pressure in the test vessel in at least two positions, one at the ERD and the other at the test vessel center.
- The test vessel is to have a design pressure of not less than the maximum explosion pressure of a stoichiometric air / methane mixture at test conditions in [2.3.6].
- The test vessel configuration is subject to approval by the Society.

b) Typical test vessels configurations:

- All test vessel configurations to be equipped with a rupture disc (1) (turbo charger simulation) at one front end.
- The ignition is in the centre of the test vessel.
- The pressure sensors are mounted at the valve flanges (p1) and at the test vessel centre (p2).
- The measuring of the methane concentration to verify a homogeneous air / methane mixture can be performed at both ends of the test vessel, e.g. (c1) and (c2).

See Fig 1, Fig 2, and Fig 3.

2.3.3 Explosion test process

The explosion testing is to be performed in two stages according to [2.3.4] and [2.3.5] for each ERD that is required to be approved as type tested.

The explosion testing is to be witnessed by a Society surveyor.

Calibration records for the instrumentation used to collect data are to be presented to, and reviewed by, the attending surveyor.

2.3.4 Reference test - Explosion test without ERD

Two explosion tests are to be carried out in the test vessel without ERD. The test vessel configuration is shown in Fig 1.

The aim of this test is to establish a reference pressure level in the test vessel which can be used for determination of the capability of a relief valve in terms of pressure relief.

Figure 1 : Configuration without ERD (flanges for ERD closed (2))

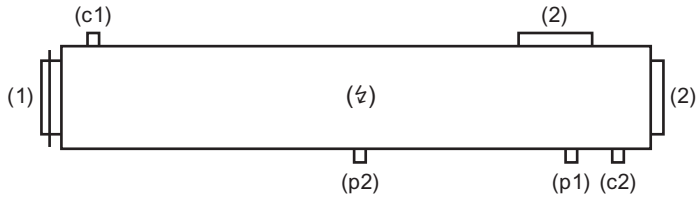

2.3.5 ERD test - Explosion test with ERD

a) Two explosion tests are to be carried out in the test vessel with the same ERD at the required position. If the ERD is a rupture disc with flame arrester, the rupture disc shall be replaced.

a) If shielding arrangements to deflect the emission of explosion combustion products at the ERD are intended, the ERD are to be tested with the shielding arrangements fitted.

The test vessel configuration is shown in Fig 2 or Fig 3.

Figure 2 : Configuration with ERD (3) mounted at the front end of the test vessel

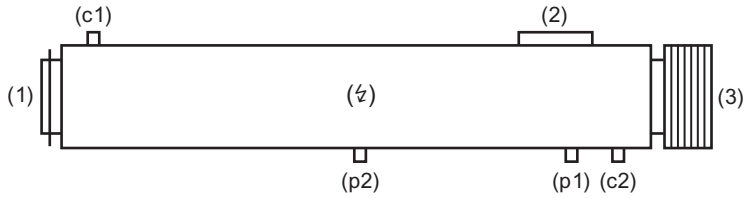

Figure 3 : Configuration with ERD (3) mounted on top of the test vessel

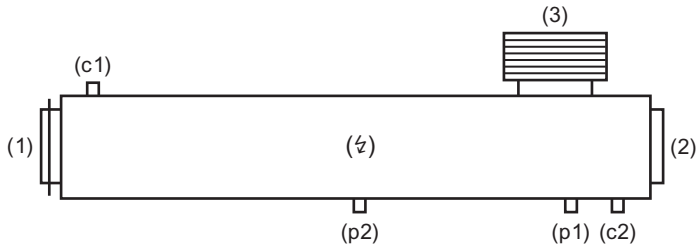

2.3.6 Explosion test method

a) The test conditions shall comply with the intended use of the ERD, such as:
   - Pipe diameter
   - Operating pressure
   - Operating temperature
   - Installation orientation.

b) All explosion tests are to be carried out using an air and methane mixture with a volumetric methane concentration of 9.5% ± 0.5%. A homogeneous air / methane mixture inside the test vessel is to be verified. The concentration of methane shall not differ by more than 0.5%.

c) The initial pressure in the test vessel is to be the specified maximum operating pressure of the ERD.

   The initial temperature in the test vessel is to be the specified maximum operating temperature of the ERD.

d) If the initial pressure and/or initial temperature deviate from the design limits, the ERD manufacturer shall prove the acceptability of this deviation either using standards or generally applicable calculation methods.

e) The ignition is to be made using an explosive charge of 50 - 100 Joule.

f) Successive explosion testing to establish an ERD functionality is to be carried out as quickly as possible during stable weather conditions.

g) The pressure rise and decay during all explosion testing is to be recorded.

h) The effect of an ERD in terms of pressure relief following an explosion is ascertained from maximum pressure recorded at the centre of the test vessel during the two stages. The pressure relief within the test vessel due to the installation of an ERD is the difference between average pressure of the two explosions of the reference test (see [2.3.4]) and the average of the two explosions of the ERD test (see [2.3.5]).

i) For acceptance of correct functioning of the flame arrester, there is to be no indication of flame or combustion outside of the ERD during its testing (see [2.3.5]). This is to be monitored by a high-speed video camera (see [2.3.1], item f)), for which ambient light conditions are to be considered to maximise the potential for flame/combustion detection. The use of a dark, ideally matt finish, background and an avoidance of direct light onto the video camera monitored area are recommended.

j) After each ERD test (see [2.3.5]), the external condition of the flame arrester to be examined for signs of damage and/or deformation that may affect the operation of the ERD.

2.4 Check of ERD components

2.4.1 After completing the explosion tests, the ERDs are to be dismantled and the condition of all components are to be ascertained and documented.

3 Assessment and approval

3.1 Assessment

3.1.1 To verify compliance with this requirement the assessment has to address the following:

a) Function and mechanical integrity of the ERD.
   - After dismantling of the ERD, the flame arrester shall not show signs of damage or any deformation that may affect the operation of the ERD.
   - If a valve is used any indication of valve sticking or uneven opening during the explosion that may affect subsequent operation of the valve has to be considered.
   - The mechanical integrity of the ERD is proven up to a maximum explosion pressure (as average of the two explosions) of the ERD tests in [2.3.5].

b) The functioning of the flame arresters is considered satisfactory if there is no indication of flame or combustion outside the ERD during the explosion tests.

3.2 Approval

3.2.1

a) The type approval is valid only for an ERD fitted to the air inlet or exhaust gas manifold of an engine having a turbocharger with compressor or turbine wheel characteristics corresponding to those required in [2.3.2] for the test vessel rupture disc in terms of free area.

b) ERD are to be type approved

c) Raw material certificates are to be Class Certificates

d) Product certificates are to be class certificates.

CHAPTER 2
ELECTRICAL INSTALLATIONS

Section 1	General
Section 2	General Design Requirements
Section 3	System Design
Section 4	Rotating Machines
Section 5	Transformers
Section 6	Semiconductor Converters
Section 7	Battery Energy Storage Systems and Chargers
Section 8	Switchgear and Controlgear Assemblies
Section 9	Cables
Section 10	Miscellaneous Equipment
Section 11	Location
Section 12	Installation
Section 13	High-voltage Installations
Section 14	Electric Propulsion Plant
Section 15	Testing
Appendix 1	Indirect Test Method for Synchronous Machines
Appendix 2	Indirect Test Method for Induction Machines (Static Torque Method)

Section 1 General

1 Application

1.1 General

1.1.1 The requirements of this Chapter apply to electrical installations on ships. In particular, they apply to the components of electrical installations for:

- primary essential services
- secondary essential services
- essential services for special purposes connected with ships specifically intended for such purposes (e.g. cargo pumps on tankers, cargo refrigerating systems, air conditioning systems on passenger ships)
- services for habitability.

The other parts of the installation are to be so designed as not to introduce any risks or malfunctions to the above services.

1.1.2 The Society may consider modified requirements for installations not exceeding either 50 V or 50 kW total generator capacity (and for ships assigned with a restricted navigation notation).

1.2 References to other regulations and standards

1.2.1 The Society may refer to other regulations and standards when deemed necessary. These include the IEC publications, notably the IEC 60092 series.

It is to be noted however that, where the prescriptive requirements in the present Rules and such standards are not aligned, the prescriptive requirements in the present Rules take precedence and are to be applied.

1.2.2 When referred to by the Society, the versions (including revisions) of the publications by the International Electrotechnical Commission (IEC) or other internationally recognized standards defined in this Chapter are the ones to be normally applied.

Note 1: Later versions (including revisions) of the international standards specified in this Chapter may be found acceptable for use by the Society on a case-by-case basis.

2 Documentation to be submitted

2.1

2.1.1 The documents listed in Tab 1 are to be submitted.

Table 1 : Documents to be submitted

No.	I/A **(1)**	Documents to be submitted
1	A	General arrangement of electrical installation
2	A	Single line diagram of main and emergency power and lighting systems
3	I	Electrical power balance (main and emergency supply)
4	A	Calculation of short-circuit currents for each installation in which the sum of rated power of the energy sources which may be connected contemporaneously to the network is greater than 500 kVA (kW)
5	A	Where the maximal short-circuit current on the main bus-bar is expected to exceed 50 kA for the main and emergency switchboards, justification of the main bus-bar and bracket strength related to induced electro-magnetic forces (except junction bars to the interrupting and protective devices)
6	A	List of circuits including, for each supply and distribution circuit, data concerning the nominal current, the cable type, length and cross-section, nominal and setting values of the protective and control devices
7	A	Single line diagram and detailed diagram of the main switchboard
8	A	Single line diagram and detailed diagram of the emergency switchboard
9	A	Diagram of the most important section boards or motor control centres (above 100 kW)
10	A	Diagram of the supply for monitoring and control systems of propulsion motors and generator prime movers
11	A	Diagram of the supply, monitoring and control systems of the rudder propellers

(1) A : To be submitted for approval ; I : To be submitted for information
(2) For high-voltage installations
(3) For electric propulsion installations
(4) If such standard is not available, the Manufacturer's specification is to be submitted

No.	I/A **(1)**	Documents to be submitted
12	A	Diagram of the supply, monitoring and control systems of controllable pitch propellers.
13	A	Diagram of the general emergency alarm system, of the public address system and other intercommunication systems
14	A	Detailed diagram of the navigation-light switchboard
15	A	Diagram of the remote stop system (ventilation, fuel pump, fuel valves, etc.)
16	A	List of batteries including type and manufacturer, voltage and capacity, location and equipment and/or system(s) served, maintenance and replacement schedule (when used for essential and emergency services)
17	A **(2)**	Selectivity and coordination of the electrical protection
18	A **(3)**	Single line diagram
19	A **(3)**	Principles of control system and its power supply
20	A **(3)**	Alarm and monitoring system including: • list of alarms and monitoring points • power supply diagram
21	A **(3)**	Safety system including: • list of monitored parameters for safety system • power supply diagram
22	I **(3)**	Arrangements and details of the propulsion control consoles and panels
23	I **(3)**	Arrangements and details of electrical coupling
24	I **(3)**	Arrangements and details of the frequency converters together with the justification of their characteristics
25	I **(3)**	Arrangements of the cooling system provided for the frequency converter and motor enclosure
26	A **(3)**	Test program for converters and rotating machines having rated power > 3 MW, dock and sea trials
27	I	Risk analysis for battery energy storage systems (See Ch 2, Sec 7 and Ch 2, Sec 12)
28	I	Information about toxic products present or likely to be produced in the battery system (See Ch 2, Sec 11, [6.9])
29	I	Justification for choice of Li Ion battery fire-extinguishing system
30	A	Test programs related to battery system type approval, factory test and onboard tests
31	I	Reports related to battery system test programs for type approval, gas analysis, factory test and onboard tests
32	I	List of standards used for battery system design and testing procedures **(4)**
33	A	List of alarms and defaults directly connected to the Li Ion battery system and interfaces with other ship systems, if any
34	I	Operation manual of Li Ion battery and battery management system (BMS)

(1) A : To be submitted for approval ; I : To be submitted for information
(2) For high-voltage installations
(3) For electric propulsion installations
(4) If such standard is not available, the Manufacturer's specification is to be submitted

3 Definitions

3.1 General

3.1.1 Unless otherwise stated, the terms used in this Chapter have the definitions laid down by the IEC standards.

The definitions given in the following requirements also apply.

3.2 Black out situation

3.2.1 A “blackout situation” means that the main and auxiliary machinery installations, including the main power supply, are out of operation but the services for bringing them into operation (e.g. compressed air, starting current from batteries, etc.) are available.

3.3 Certified safe-type equipment

3.3.1 Certified safe-type equipment is electrical equipment of a type for which a national or other appropriate authority has carried out the type verifications and tests necessary to certify the safety of the equipment with regard to explosion hazard when used in an explosive gas atmosphere.

3.4 Dead ship condition

3.4.1 *The condition under which the main propulsion plant, boilers and auxiliaries are not in operation due to the absence of power.*

Note 1: Dead ship condition is a condition in which the entire machinery installation, including the power supply, is out of operation and the auxiliary services such as compressed air, starting current from batteries etc., for bringing the main propulsion into operation and for the restoration of the main power supply are not available.

3.5 Distribution board

3.5.1 A switchgear and controlgear assembly arranged for the distribution of electrical energy to final sub-circuits.

3.6 Earthing

3.6.1 Electrical connections between conductive parts and local earth (in this case, the local earth, ship's hull, or metallic structure) in such a manner as to ensure an immediate discharge of electrical energy without danger at all times.

3.7 Emergency condition

3.7.1 *A condition under which any services needed for normal operational and habitable conditions are not in working order due to failure of the main source of electrical power.*

3.8 Emergency source of electrical power

3.8.1 *A source of electrical power, intended to supply the emergency switchboard in the event of failure of the supply from the main source of electrical power.*

3.9 Emergency switchboard

3.9.1 *A switchboard which in the event of failure of the main electrical power supply system is directly supplied by the emergency source of electrical power or the transitional source of emergency and is intended to distribute electrical energy to the emergency services.*

3.10 Environmental categories

3.10.1 Electrical equipment is classified into environmental categories according to the temperature range, vibration levels, and resistance to chemically active substances, to humidity, and to EMC required for installation in bridge and deck zone.

The designation of the environmental categories is indicated by the EC Code in Tab 2.

The first characteristic numeral indicates the temperature range in which the electrical equipment operates satisfactorily, as specified in Tab 3.

The second characteristic numeral indicates the vibration level in which the electrical equipment operates satisfactorily, as specified in Tab 4.

3.10.2 The tests for verifying the additional letters and the characteristic numeral of the environmental categories are defined in Ch 3, Sec 6.

Table 2 : EC Code

Code letter	First characteristic numeral	Second characteristic numeral	Additional letter
EC	(numerals 1 to 4)	(numerals 1 to 3)	S **(1)** C **(2)** B **(3)**

(1) The additional letter S indicates the resistance to salt mist (exposed decks, masts) of the electrical equipment

(2) The supplementary letter C indicates the relative humidity up to 80% (air conditioned areas) in which the electrical equipment operates satisfactorily

(3) The additional letter B indicates the compliance for installing on the bridge and deck zone or in the vicinity of the bridge, with regards to EMC requirements specified in IEC 60533

Table 3 : First characteristic numeral

First characteristic numeral	Brief description of location	Temperature range, in °C	
1	Air conditioned areas	+ 5	+ 40
2	Enclosed spaces	+ 5	+ 45
3	Inside consoles or close to combustion engines and similar	+ 5	+ 55
4	Exposed decks, masts	– 25	+ 45

Table 4 : Second characteristic numeral

Second characteristic numeral	Brief description of location	Frequency range	Displacement amplitude, in mm	Acceleration amplitude g
1	Machinery spaces, command and control stations, accommodation spaces, exposed decks, cargo spaces	from 2,0 to 13,2 Hz	1,0	–
		from 13,2 to 100 Hz	–	0,7
2	Masts	from 2,0 to 13,2 Hz	3,0	–
		from 13,2 to 50 Hz	–	2,1
3	On air compressors, on diesel engines and similar	from 2,0 to 25,0 Hz	1,6	–
		from 25,0 to 100 Hz	–	4,0

3.11 Essential services

3.11.1 Essential services are defined in Pt A, Ch 1, Sec 1, [1.2.1]. They are subdivided in primary and secondary essential services.

3.11.2 Primary essential services

Primary essential services are those which need to be maintained in continuous operation.

Examples of equipment for primary essential services are the following:

- steering gear
- actuating systems of controllable pitch propellers
- scavenging air blowers, fuel oil supply pumps, fuel valve cooling pumps, lubricating oil pumps and cooling water pumps for main and auxiliary engines and turbines necessary for the propulsion
- forced draught fans, feed water pumps, water circulating pumps, condensate pumps, oil burning installations, for steam plants or steam turbines ship, and also for auxiliary boilers on ship where steam is used for equipment supplying primary essential services
- azimuth thrusters which are the sole means for propulsion/steering with lubricating oil pumps, cooling water pumps
- electrical equipment for electric propulsion plant with lubricating oil pumps and cooling water pumps
- electric generators and associated power sources supplying the above equipment
- hydraulic pumps supplying the above equipment
- viscosity control equipment for heavy fuel oil
- control, monitoring and safety devices/systems for equipment for primary essential services
- speed regulators dependent on electrical energy for main or auxiliary engines necessary for propulsion
- starting equipment of diesel engines and gas turbines.

The main lighting system for those parts of the ship normally accessible to and used by personnel and passengers is also considered as a primary essential service.

3.11.3 Secondary essential services

Secondary essential services are those services which need not necessarily be in continuous operation.

Examples of equipment for secondary essential services are the following:

- windlasses
- thrusters
- fuel oil transfer pumps and fuel oil treatment equipment
- lubrication oil transfer pumps and lubrication oil treatment equipment
- preheaters for heavy fuel oil
- sea water pumps
- starting air and control air compressors
- bilge, ballast and heeling pumps
- fire pumps and other fire-extinguishing medium pumps
- ventilation fans for engine and boiler rooms
- services considered necessary to maintain dangerous cargo in a safe condition
- navigation lights, aids and signals
- internal safety communication equipment
- fire detection and alarm systems
- electrical equipment for watertight closing appliances

- electric generators and associated power supplying the above equipment
- hydraulic pumps supplying the above mentioned equipment
- control, monitoring and safety for cargo containment systems
- control, monitoring and safety devices/systems for equipment for secondary essential services.
- cooling system of environmentally controlled spaces.

3.12 Final sub-circuit

3.12.1 That portion of a wiring system extending beyond the final required overcurrent protective device of a board.

3.13 Hazardous areas

3.13.1 Areas in which an explosive atmosphere is or may be expected to be present in quantities such as to require special precautions for the construction, installation and use of electrical apparatus.

Note 1: An explosive gas atmosphere is a mixture with air, under atmospheric conditions, of flammable substances in the form of gas, vapour or mist, in which, after ignition, combustion spreads throughout the unconsumed mixture.

3.13.2 Hazardous areas are classified in zones based upon the frequency and the duration of the occurrence of explosive atmosphere.

3.13.3 Hazardous areas for explosive gas/dust atmosphere are classified in the following zones:

- Zone 0/20: an area in which an explosive gas/dust atmosphere is present continuously or is present for long periods
- Zone 1/21: an area in which an explosive gas/dust atmosphere is likely to occur in normal operation
- Zone 2/22: an area in which an explosive gas/dust atmosphere is not likely to occur in normal operation and if it does occur, is likely to do only infrequently and will exist for a short period only.

3.14 High fire risk areas

3.14.1 The high fire risk areas are defined as follows:

a) machinery spaces as defined in Ch 4, Sec 1, [2.30], except spaces having little or no fire risk as defined by category (10) of Ch 4, Sec 5, [1.3.3], item b) 2)

b) spaces containing fuel treatment equipment and other highly flammable substances

c) galleys and pantries containing cooking appliances

d) laundry with drying equipment

e) spaces as defined in Ch 4, Sec 5, [1.3.3] for ships carrying more than 36 passengers, as:
   - (8) accommodation spaces of greater fire risk
   - (12) machinery spaces and main galleys
   - (14) other spaces in which flammable liquids are stowed

3.15 High-voltage systems

3.15.1 Alternating current systems with rated voltages greater than 1000 V r.m.s. and direct current systems with a maximum instantaneous value of the voltage under rated operating conditions greater than 1500 V.

3.16 Insulation

3.16.1 Basic insulation

Insulation applied to live parts to provide basic protection against electric shock.

Note 1: Basic insulation does not necessarily include insulation used exclusively for functional purposes.

3.16.2 Supplementary insulation

Independent insulation applied in addition to basic insulation in order to provide protection against electric shock in the event of a failure of basic insulation.

3.16.3 Double insulation

Insulation comprising both basic insulation and supplementary insulation.

3.16.4 Reinforced insulation

A single insulation system applied to live parts, which provides a degree of protection against electric shock equivalent to double insulation.

Note 1: The term "insulation system" does not imply that the insulation must be one homogeneous piece. It may comprise several layers which cannot be tested singly as supplementary or basic insulation.

3.17 Low-voltage systems

3.17.1 Alternating current systems with rated voltages greater than 50 V r.m.s. up to 1000 V r.m.s. inclusive and direct current systems with a maximum instantaneous value of the voltage under rated operating conditions greater than 50 V up to 1500 V inclusive.

3.18 Main generating station

3.18.1 *The space in which the main source of electrical power is situated.*

3.19 Main source of electrical power

3.19.1 *A source intended to supply electrical power to the main switchboard for distribution to all services necessary for maintaining the ship in normal operational and habitable condition.*

3.20 Main switchboard

3.20.1 *A switchboard which is directly supplied by the main source of electrical power and is intended to distribute electrical energy to the ship's services.*

3.21 Normal operational and habitable condition

3.21.1 *A condition under which the ship as a whole, the machinery, services, means and aids ensuring propulsion, ability to steer, safe navigation, fire and flooding safety, internal and external communications and signals, means of escape, and emergency boat winches, as well as the designed comfortable conditions of habitability are in working order and functioning normally.*

3.22 Safety voltage

3.22.1 A voltage which does not exceed 50 V a.c. r.m.s. between conductors, or between any conductor and earth, in a circuit isolated from the supply by means such as a safety isolating transformer.

3.22.2 A voltage which does not exceed 50 V d.c. between conductors or between any conductor and earth in a circuit isolated from higher voltage circuits.

3.23 Section boards

3.23.1 A switchgear and controlgear assembly which is supplied by another assembly and arranged for the distribution of electrical energy to other section boards or distribution boards.

3.24 Services for habitability

3.24.1 Services for habitability are those intended for minimum comfort conditions for people on board.

Examples of equipment for maintaining conditions of habitability:

- cooking
- heating
- domestic refrigeration
- mechanical ventilation
- sanitary and fresh water
- electric generators and associated power sources supplying the above equipment.

3.25 Voltage and frequency transient

3.25.1 Voltage transient

Sudden change in voltage (excluding spikes) which goes outside the nominal voltage tolerance limits and returns to and remains inside these limits within a specified recovery time after the initiation of the disturbance (time range: seconds).

3.25.2 Frequency transient

Sudden change in frequency which goes outside the frequency tolerance limits and returns to and remains inside these limits within a specified recovery time after initiation of the disturbance (time range: seconds).

4 Type approved components

4.1 General

4.1.1 The following components are to be type approved or in accordance with [4.1.2]:

- electrical cables
- transformers
- rotating machines
- electrical converters for primary essential services
- switching devices (circuit-breakers, contactors, disconnectors, etc.) and overcurrent protective devices
- sensors, alarm panels, electronic protective devices, automatic and remote control equipment, actuators, safety devices for installations intended for essential services (steering, controllable pitch propellers, propulsion machinery, etc.), electronic speed regulators for main or auxiliary engines
- computers used for tasks essential to safety
- cable trays or protective casings made of plastics materials (thermoplastic or thermosetting plastic materials)
- batteries.

4.1.2 Case by case approval based on submission of adequate documentation and execution of tests may also be granted at the discretion of the Society.

Section 2 General Design Requirements

1 Environmental conditions

1.1 General

1.1.1 The electrical components of installations are to be designed and constructed to operate satisfactorily under the environmental conditions on board.

In particular, the conditions shown in the tables in this Article are to be taken into account.

Note 1: The environmental conditions are characterised by:

- one set of variables including climatic conditions (e.g. ambient air temperature and humidity), conditions dependent upon chemically active substances (e.g. salt mist) or mechanically active substances (e.g. dust or oil), mechanical conditions (e.g. vibrations or inclinations) and conditions dependent upon electromagnetic noise and interference, and
- another set of variables dependent mainly upon location on vessels, operational patterns and transient conditions.

1.2 Ambient air temperatures

1.2.1 For ships classed for unrestricted navigation, the ambient air temperature ranges shown in Tab 1 are applicable in relation to the various locations of installation.

Table 1 : Ambient air temperature

Location	Temperature range, in °C	
Enclosed spaces	+ 5	+ 45
Inside consoles or fitted on combustion engines and similar	+ 5	+ 55
Air conditioned areas	+ 5	+ 40
Exposed decks	– 25	+ 45

1.2.2 For ships classed for service in specific zones, the Society may accept different ranges for the ambient air temperature (e.g. for ships operating outside the tropical belt, the maximum ambient air temperature may be assumed as equal to + 40°C instead of + 45°C).

1.2.3 Reduced ambient air temperature ranges may be considered for enclosed spaces and air conditioned areas, provided the ambient air temperature range, equipment and temperature control comply with Ch 2, Sec 11, [1.3]. Cooling systems of these environmentally controlled spaces are to be classified as secondary essential service, in accordance with Ch 2, Sec 1, [3.11.3].

1.3 Humidity

1.3.1 For ships classed for unrestricted service, the humidity ranges shown in Tab 2 are applicable in relation to the various locations of installation.

Table 2 : Humidity

Location	Humidity
General	95% up to 45°C 70% above 45°C
Air conditioned areas	Different values may be considered on a case-by-case basis

1.4 Sea water temperatures

1.4.1 The temperatures shown in Tab 3 are applicable to ships classed for unrestricted service.

1.4.2 For ships classed for service in specific zones, the Society may accept different values for the sea water temperature (e.g. for ships operating outside the tropical belt, the maximum sea water temperature may be assumed as equal to + 25°C instead of + 32°C).

Table 3 : Water temperature

Coolant	Temperature range, in °C	
Sea water	0	+ 32

1.5 Salt mist

1.5.1 The applicable salt mist content in the air is to be 1mg/m³.

1.6 Inclinations

1.6.1 The inclinations applicable are those shown in Tab 4.

The Society may consider deviations from these angles of inclination taking into consideration the type, size and service conditions of the ships.

Table 4 : Inclination of ship

Type of machinery, equipment or component	Angles of inclination, in degrees **(1)**			
	Athwartship		Fore-and-aft	
	static	dynamic **(4)**	static	dynamic **(5)**
Machinery and equipment relative to main electrical power installation	15	22,5	5	7,5
Machinery and equipment relative to the emergency power installation and crew and passenger safety systems of the ship (e.g. emergency source of power, emergency fire pumps, etc.)	22,5 **(2)**	22,5 **(2)**	10	10
Switchgear and associated electrical and electronic components and remote control systems **(3)**	22,5	22,5	10	10

(1) Athwartship and fore-and-aft angles may occur simultaneously in their most unfavourable combination.
(2) In the case of gas carriers or chemical tankers, the emergency power supply must also remain operable with the ship flooded to a final athwartship inclination up to a maximum of 30°.
(3) No undesired switching operations or functional changes may occur up to an angle of inclination of 45°.
(4) The period of dynamic inclination may be assumed equal to 10 s.
(5) The period of dynamic inclination may be assumed equal to 5 s.

1.7 Vibrations

1.7.1 In relation to the location of the electrical components, the vibration levels given in Tab 5 are to be assumed.

1.7.2 The natural frequencies of the equipment, their suspensions and their supports are to be outside the frequency ranges specified.

Where this is not possible using a suitable constructional technique, the equipment vibrations are to be dumped so as to avoid unacceptable amplifications.

Table 5 : Vibration levels

Location	Frequency range, in Hz	Displacement amplitude, in mm	Acceleration amplitude g
Machinery spaces, command and control stations, accommodation spaces, exposed decks, cargo spaces	from 2,0 to 13,2	1,0	–
	from 13,2 to 100	–	0,7
On air compressors, on diesel engines and similar	from 2,0 to 25,0	1,6	–
	from 25,0 to 100	–	4,0
Masts	from 2,0 to 13,2	3,0	–
	from 13,2 to 50	–	2,1

2 Quality of power supply

2.1 General

2.1.1 All electrical components supplied from the main and emergency systems are to be so designed and manufactured that they are capable of operating satisfactorily under the normally occuring variations in voltage and frequency specified from [2.2] to [2.4].

2.2 a.c. distribution systems

2.2.1 For alternating current components the voltage and frequency variations of power supply shown in Tab 6 are to be assumed.

Table 6 : Voltage and frequency variations of power supply in a.c.

Parameter	Variations	
	Continuous	Transient
Voltage	+ 6% – 10%	± 20% (recovery time: 1,5 s)
Frequency	± 5%	± 10% (recovery time: 5 s)
Note 1: For alternating current components supplied by emergency generating sets, different variations may be considered.		

2.3 d.c. distribution systems

2.3.1 For direct current components the power supply variations shown in Tab 7 are to be assumed.

Table 7 : Voltage variations in d.c.

Parameters	Variations
Voltage tolerance (continuous)	± 10%
Voltage cyclic variation	5%
Voltage ripple (a.c. r.m.s. over steady d.c. voltage)	10%

2.3.2 For direct current components supplied by electrical battery the following voltage variations are to be assumed:

- +30% to –25% for components connected to the battery during charging (see Note 1)
- +20% to –25% for components not connected to the battery during charging.

Note 1: Different voltage variations as determined by the charging/discharging characteristics, including ripple voltage from the charging device, may be considered.

2.3.3 Any special system, e.g. electronic circuits, whose function cannot operate satisfactorily within the limits shown in the tables should not be supplied directly from the system but by alternative means, e.g. through stabilized supply.

2.4 Harmonic distortions

2.4.1 For components intended for systems without substantially static converter loads and supplied by synchronous generators, it is assumed that the total voltage harmonic distortion does not exceed 5%, and the single harmonic does not exceed 3% of the nominal voltage.

2.4.2 For components intended for systems fed by static converters, and/or systems in which the static converter load predominates, it is assumed that:

- the single harmonics distorsion does not exceed the values specified in IEC 61000-2-4:2002 for Class 2 systems. A maximum of 5% for single order harmonic can be accepted.
- the total harmonic distortion does not exceed 8%.

2.4.3 Higher values for the harmonic content (e.g. in electric propulsion plant systems) may be accepted where all installed equipment and systems have been designed for a higher specified limit. This relaxation on limits is to be documented (harmonic distortion calculation report).

3 Electromagnetic susceptibility

3.1

3.1.1 For electronic type components such as sensors, alarm panels, automatic and remote control equipment, protective devices and speed regulators, the conducted and radiated disturbance levels to be assumed are those given in Part C, Chapter 3.

Note 1: See also IEC Publication 60533 - "Electromagnetic Compatibility of Electrical and Electronic Installations in Ships and of Mobile and Fixed Offshore Units".

3.1.2 Electrical and electronic equipment on the bridge and in the vicinity of the bridge, not required neither by classification rules nor by International Conventions and liable to cause electromagnetic disturbance, shall be of type which fulfil the test requirements of test specification Ch 3, Sec 6, Tab 1, tests 19 and 20.

Note 1: Bridge and vicinity of the bridge covers deck and bridge zone, such as:

- the wheelhouse including bridge wings
- control rooms, characterized by equipment for inter-communication, signal processing, radio communication and navigation, auxiliary equipment
- area in close proximity (within a 5 meters distance) to receiving and/or transmitting antennas and large openings in the metallic structure.

4 Materials

4.1 General

4.1.1 In general, and unless it is adequately protected, all electrical equipment is to be constructed of durable, flame-retardant, moisture-resistant materials which are not subject to deterioration in the atmosphere and at the temperatures to which they are likely to be exposed. Particular consideration is to be given to sea air and oil vapour contamination.

Note 1: The flame-retardant and moisture-resistant characteristics may be verified by means of the tests cited in IEC Publication 60092-101:2018 or in other recognised standards.

4.1.2 Where the use of incombustible materials or lining with such materials is required, the incombustibility characteristics may be verified by means of the test cited in IEC Publication 60092-101:2018 or in other recognised standards.

4.2 Insulating materials for windings

4.2.1 Insulated windings are to be resistant to moisture, sea air and oil vapour unless special precautions are taken to protect insulants against such agents.

4.2.2 The insulation classes given in Tab 8 may be used in accordance with IEC Publication 60085.

Table 8 : Insulation Classes

Class	Maximum continuous operating temperature, in °C
A	105
E	120
B	130
F	155
H	180

4.3 Insulating materials for cables

4.3.1 See Ch 2, Sec 9, [2.3].

5 Construction

5.1 General

5.1.1 All electrical apparatus is to be so constructed as not to cause injury when handled or touched in the normal manner.

5.1.2 The design of electrical equipment is to allow accessibility to each part that needs inspection or adjustment, also taking into account its arrangement on board.

5.1.3 Enclosures are to be of adequate mechanical strength and rigidity.

5.1.4 Enclosures for electrical equipment are generally to be of metal; other materials may be accepted for accessories such as connection boxes, socket-outlets, switches and luminaires. Other exemptions for enclosures or parts of enclosures not made of metal will be specially considered by the Society.

5.1.5 Cable entrance are not to impair the degree of protection of the relevant enclosure (see Ch 2, Sec 3, Tab 2).

5.1.6 All nuts and screws used in connection with current-carrying parts and working parts are to be effectively locked.

5.1.7 All equipment is generally to be provided with suitable, fixed terminal connectors in an accessible position for convenient connection of the external cables.

5.2 Degree of protection of enclosures

5.2.1 Electrical equipment is to be protected against the ingress of foreign bodies and water.

The minimum required degree of protection, in relation to the place of installation, is generally that specified in Ch 2, Sec 3, Tab 2.

5.2.2 The degrees of protection are to be in accordance with:

- IEC Publication No. 60529:2019 for equipment in general
- IEC Publication No. 60034-5:2006 for rotating machines.

5.2.3 For cable entries see [5.1.5].

6 Protection against explosion hazard

6.1 Protection against explosive gas or vapour atmosphere hazard

6.1.1 Electrical equipment intended for use in areas where explosive gas or vapour atmospheres may occur (e.g. oil tankers, liquefied gas carriers, chemical tankers, ro-ro spaces, paint stores, ballast water management systems etc.), is to be of a "safe type" suitable for the relevant flammable atmosphere and for shipboard use.

6.1.2 For certified safe type equipment, see Ch 2, Sec 3, Tab 14.

6.2 Protection against combustible dust hazard

6.2.1 Electrical appliances intended for use in areas where a combustible dust hazard may be present are to be arranged with enclosures having a degree of protection and maximum surface temperature suitable for the dust to which they may be exposed.

Note 1: Where the characteristics of the dust are unknown, the appliances are to have a degree of protection IP6X. For most dusts a maximum surface temperature of 200°C is considered adequate.

Section 3 System Design

1 Supply systems and characteristics of the supply

1.1 Supply systems

1.1.1 The following distribution systems may be used:

a) on d.c. installations:
- two-wire insulated
- two-wire with one pole earthed

b) on a.c. installations:
- three-phase three-wire with neutral insulated
- three-phase three-wire with neutral directly earthed or earthed through an impedance
- three-phase four-wire with neutral directly earthed or earthed through an impedance
- single-phase two-wire insulated
- single-phase two-wire with one phase earthed.

1.1.2 Distribution systems other than those listed in [1.1.1] will be considered by the Society on a case by case basis.

1.1.3 The hull return system of distribution is not to be used for power, heating or lighting in any ship of 1600 gross tonnage and upwards.

1.1.4 The requirement of [1.1.3] does not preclude under conditions approved by the Society the use of:

a) impressed current cathodic protective systems

b) limited and locally earthed systems, or

c) insulation level monitoring devices provided the circulation current does not exceed 30 mA under the most unfavourable conditions.

Note 1: Limited and locally earthed systems such as starting and ignition systems of internal combustion engines are accepted provided that any possible resulting current does not flow directly through any dangerous spaces.

1.1.5 For the supply systems of ships carrying liquid developing combustible gases or vapours, see Pt D, Ch 7, Sec 5, Pt D, Ch 8, Sec 10 or Pt D, Ch 9, Sec 10.

1.1.6 For the supply systems in HV Installations, see Ch 2, Sec 13.

1.2 Maximum voltages

1.2.1 The maximum voltages for both alternating current and direct current low-voltage systems of supply for the ship's services are given in Tab 1.

1.2.2 Voltages exceeding those shown will be specially considered in the case of specific systems.

1.2.3 For high-voltage systems, see Ch 2, Sec 13.

Table 1 : Maximum voltages for various ship services

Use		Maximum voltage V
For permanently installed and connected to fixed wiring	Power equipment	1000
	Heating equipment (except in accommodation spaces)	500
	Cooking equipment	500
	Lighting	250
	Space heaters in accommodation spaces	250
	Control **(1)**, communication (including signal lamps) and instrumentation equipment	250

(1) For control equipment which is part of a power and heating installation (e.g. pressure or temperature switches for start/stop motors), the same maximum voltage as allowed for the power and heating equipment may be used provided that all components are constructed for such voltage. However, the control voltage to external equipment is not to exceed 500 V.

(2) Both conductors in such systems are to be insulated from earth.

Use		Maximum voltage V
For permanently installed and connected by flexible cable	Power and heating equipment, where such connection is necessary because of the application (e.g. for moveable cranes or other hoisting gear)	1000
For socket-outlets supplying	Portable appliances which are not hand-held during operation (e.g. refrigerated containers) by flexible cables	1000
	Portable appliances and other consumers by flexible cables	250
	Equipment requiring extra precaution against electric shock where a isolating transformer is used to supply one appliance **(2)**	250
	Equipment requiring extra precaution against electric shock with or without a safety transformer **(2)**	50
(1) For control equipment which is part of a power and heating installation (e.g. pressure or temperature switches for start/stop motors), the same maximum voltage as allowed for the power and heating equipment may be used provided that all components are constructed for such voltage. However, the control voltage to external equipment is not to exceed 500 V. **(2)** Both conductors in such systems are to be insulated from earth.		

2 Sources of electrical power

2.1 General

2.1.1 *Electrical installations are to be such that:*

a) *All electrical auxiliary services necessary for maintaining the ship in normal operational and habitable conditions* and for the preservation of the cargo *will be assured without recourse to the emergency source of electrical power.*

b) *Electrical services essential for safety will be assured under various emergency conditions.*

c) When a.c. generators are involved, attention is to be given to the starting of motors connected to the system, specially squirrel-cage motors, particularly with regard to the effect of the magnitude and duration of the transient voltage change produced due to the maximum starting current and the power factor. The voltage drop due to such starting current is not to cause any motor already operating to stall or have any adverse effect on other equipment in use.

2.2 Main source of electrical power

2.2.1 *A main source of electrical power is to be provided, of sufficient capability to supply all electrical auxiliary services necessary for maintaining the ship in normal operational and habitable conditions* and for the preservation of the cargo *without recourse to the emergency source of electrical power.*

2.2.2 For vessels propelled by electrical power and having two or more constant voltage propulsion generating sets which constitute the source of electrical energy for the ship's auxiliary services, see Ch 2, Sec 14.

2.2.3 *The main source of electrical power is to consist of at least two generating sets.*

The capacity of these generating sets is to be such that in the event of any one generating set being stopped it will still be possible to supply those services necessary to provide:

a) *normal operational conditions of propulsion and safety* (see [2.2.4])

b) *minimum comfortable conditions of habitability* (see Ch 2, Sec 1, [3.24])

c) preservation of the cargo, i. e. all the equipment which are needed for refrigerated cargo or operation of any safety device, such as inert gas generator.

Such capacity is, in addition, to be sufficient to start the largest motor without causing any other motor to stop or having any adverse effect on other equipment in operation.

2.2.4 Those services necessary to provide normal operational conditions of propulsion and safety include primary and secondary essential services.

For the purpose of calculating the capacity necessary for such services, it is essential to consider which of them can be expected to be in use simultaneously.

For a duplicated service, one being supplied electrically and the other non-electrically (e.g. driven by the main engine), the electrical capacity is not included in the above calculation.

2.2.5 The services in [2.2.4] do not include:

- thrusters not forming part of the main propulsion (except in manoeuvring conditions)
- cargo handling gear
- cargo pumps
- refrigerators for air conditioning.

2.2.6 *Further to the provisions above, the generating sets shall be such as to ensure that with any one generator or its primary source of power out of operation, the remaining generating sets shall be capable of providing the electrical services necessary to start the main propulsion plant from a "dead ship" condition.*

2.2.7 Where the electrical power is normally supplied by more than one generator set simultaneously in parallel operation, provision of protection, including automatic disconnection of sufficient non-essential services and, if necessary, secondary essential services and those provided for habitability, should be made to ensure that, in case of loss of any of these generating sets, the remaining ones are kept in operation to permit propulsion and steering and to ensure safety.

2.2.8 Where the electrical power is normally supplied by one generator, provision is to be made, upon loss of power, for automatic starting and connecting to the main switchboard of stand-by generator(s) of sufficient capacity to supply the primary essential services and to ensure the safety of the ship, with automatic restarting of the essential auxiliaries, in sequential operation if required. Starting and connection to the main switchboard of the stand-by generator is to be preferably within 30 seconds, but in any case not more than 45 seconds after loss of power.

Where prime movers with longer starting time are used, this starting and connection time may be exceeded upon approval from the Society

2.2.9 Load shedding or other equivalent arrangements should be provided to protect the generators required in the present Article against sustained overload.

The load shedding should be automatic.

The non-essential services, services for habitability and, if necessary, the secondary essential services may be shed in order to make sure that the connected generator set(s) is/are not overloaded.

2.2.10 *The emergency source of electrical power may be used for the purpose of starting from a "dead ship" condition if its capability either alone or combined with that of any other source of electrical power is sufficient to provide at the same time those services required to be supplied in accordance with the provisions of* [3.6.3], items a), b), c) and d), or Pt D, Ch 11, Sec 5 *for passenger ships.*

2.2.11 *The arrangement of the ship's main source of electrical power shall be such that essential services can be maintained regardless of the speed and direction of rotation of the main propulsion machinery or shafting.*

2.2.12 Generators driven by the propulsion plant (shaft generators) which are intended to operate at constant speed (e.g. a system where vessel speed and direction are controlled by varying propeller pitch) may be accepted as forming part of the main source of electrical power if, in all sailing and manoeuvring conditions including the propeller being stopped, the capacity of these generators is sufficient to provide the electrical power to comply with [2.2.3] and all further requirements, especially those of [2.2.6]. They are to be not less effective and reliable than the independent generating sets.

2.2.13 Shaft generator installations which do not comply with the provisions of [2.2.12] may be used as additional sources of electrical power with respect to the power balance provided that:

a) in the event of a loss of power from the shaft generator(s), e.g. due to a sudden stopping of the propulsion plant, or upon frequency variations exceeding ± 10%, a standby generating set is started automatically

b) the capacity of the standby set is sufficient for the loads necessary for propulsion and safety of the vessel

c) the time required to restore these services is not longer than 45 s.

2.2.14 *Where transformers,* converters or similar appliances *constitute an essential part of the electrical supply system, the system is to be so arranged as to ensure the same continuity of supply as stated in this sub-article.*

This may be achieved by arranging at least two three-phase or three single-phase transformers supplied, protected and installed as indicated in Fig 1, so that with any one transformer not in operation, the remaining transformer(s) is (are) sufficient to ensure the supply to the services stated in [2.2.3].

Each transformer required is to be located as a separate unit with separate enclosure or equivalent, and is to be served by separate circuits on the primary and secondary sides.

Each primary circuit is to be provided with switchgear and protection devices in each phase.

Each of the secondary circuits is to be provided with a multipole isolating switch.

Suitable interlocks or a warning label are to be provided in order to prevent maintenance or repair of one single-phase transformer unless both switchgears are opened on their primary and secondary sides.

2.2.15 For ships intended for operation with periodically unattended machinery spaces, see Part F, Chapter 3.

2.2.16 For starting arrangements for main generating sets, see Ch 1, Sec 2, [3.1].

2.2.17 Where single phase transformers are used, only one spare element is required if special precautions are taken to rapidly replace the faulty one.

2.2.18 Generators and generator systems, having the ship propulsion machinery as their prime mover but not forming part of the ship main source of electrical power, may be used whilst the ship is at sea to supply electrical services required for normal operational and habitable conditions provided that:

a) there are sufficient and adequately rated additional generators fitted, which constitute the main source of electrical power required by [2.2.1]

b) arrangements are fitted to automatically start one or more of the generators, constituting the main source of electrical power required by [2.2.1], upon the frequency variations exceeding ± 10% of the limits specified below

c) within the declared operating range of the generators and/or generator systems the specified limits for the voltage variations and the frequency variations in Ch 2, Sec 2 can be met

d) the short circuit current of the generator and/or generator system is sufficient to trip the generator/generator system circuit-breaker taking into account the selectivity of the protective devices for the distribution system

e) where considered appropriate, load shedding arrangements are to be fitted

f) on ships having remote control of the ship's propulsion machinery from the navigation bridge, means are provided, or procedures be in place, so as to ensure that supplies to essential services are maintained during manoeuvring conditions in order to avoid a blackout situation.

Figure 1 :

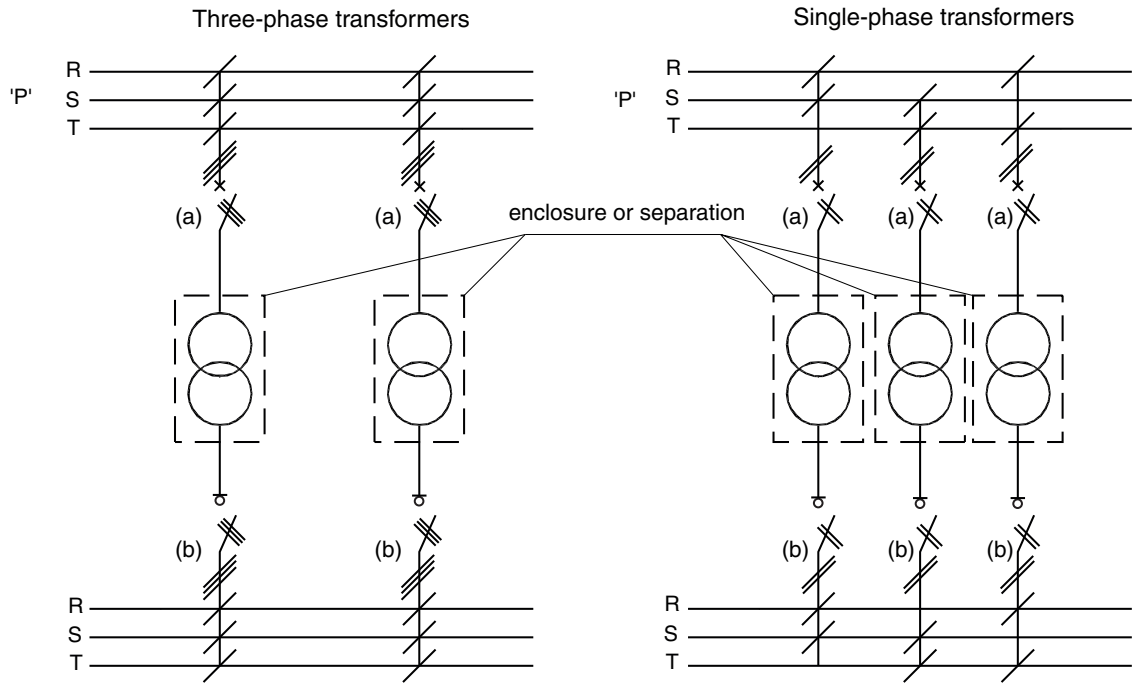

(a) switchgear and protection devices

(b) multipole isolating switch

2.3 Emergency source of electrical power

2.3.1 *A self-contained emergency source of electrical power shall be provided.*

2.3.2 *Provided that suitable measures are taken for safeguarding independent emergency operation under all circumstances, the emergency generator may be used, exceptionally, and for short periods, to supply non-emergency circuits.*

Exceptionally is understood to mean conditions, while the vessel is at sea, such as:

a) blackout situation

b) dead ship situation

c) routine use for testing

d) short-term parallel operation with the main source of electrical power for the purpose of load transfer.

Unless otherwise instructed by the Society, the emergency generator may be used during lay time in port for the supply of the ship mains, provided the requirements of [2.4] are complied with.

2.3.3 *The electrical power available shall be sufficient to supply all those services that are essential for safety in an emergency, due regard being paid to such services as may have to be operated simultaneously.*

2.3.4 *The emergency source of electrical power shall be capable, having regard to starting currents and the transitory nature of certain loads, of supplying simultaneously at least the services stated in* [3.6.3] *for the period specified, if they depend upon an electrical source for their operation.*

2.3.5 *The transitional source of emergency electrical power, where required, is to be of sufficient capacity to supply at least the services stated in* [3.6.7] *for half an hour, if they depend upon an electrical source for their operation.*

2.3.6 *An indicator shall be mounted in a suitable place on the main switchboard or in the machinery control room to indicate when the batteries constituting either the emergency source of electrical power or the transitional source of emergency electrical power referred to in* [2.3.15] *and* [2.3.16] *are being discharged.*

2.3.7 If the services which are to be supplied by the transitional source receive power from an accumulator battery by means of semiconductor converters, means are to be provided for supplying such services also in the event of failure of the converter (e.g. providing a bypass feeder or a duplication of converter).

2.3.8 *Where electrical power is necessary to restore propulsion, the capacity of the emergency source shall be sufficient to restore propulsion to the ship in conjunction to other machinery as appropriate, from a dead ship condition within 30 min. after blackout.*

For the purpose of this requirement only, the dead ship condition and blackout are both understood to mean a condition under which the main propulsion plant, boilers and auxiliaries are not in operation and in restoring the propulsion, no stored energy for starting the propulsion plant, the main source of electrical power and other essential auxiliaries is to be assumed available. It is assumed that means are available to start the emergency generator at all times.

The emergency generator and other means needed to restore the propulsion are to have a capacity such that the necessary propulsion starting energy is available within 30 minutes of blackout/dead ship condition as defined above. Emergency generator stored starting energy is not to be directly used for starting the propulsion plant, the main source of electrical power and/or other essential auxiliaries (emergency generator excluded).

For steam ships, the 30 minute time limit given in SOLAS can be interpreted as time from blackout/dead ship condition defined above to light-off the first boiler.

2.3.9 Where the emergency source of power is necessary to restore the main source of electrical power, provisions are to be made to allow a manual restart of a main generating set in case of failure of the emergency source.

2.3.10 *Provision shall be made for the periodic testing of the complete emergency system and shall include the testing of automatic starting arrangements,* where provided.

2.3.11 For starting arrangements for emergency generating sets, see Ch 1, Sec 2, [3.1].

2.3.12 *The emergency source of electrical power may be either a generator or an accumulator battery which shall comply with the requirements of* [2.3.13] *or* [2.3.15]*, respectively.*

2.3.13 *Where the emergency source of electrical power is a generator, it shall be:*

a) driven by a suitable prime mover with an independent supply of fuel, having a flashpoint (closed cup test) of not less than 43°C

b) started automatically upon failure of the main source of electrical power supply to the emergency switchboard *unless a transitional source of emergency electrical power in accordance with c) below is provided; where the emergency generator is automatically started, it shall be automatically connected to the emergency switchboard; those services referred to in* [3.6.7] *shall then be connected automatically to the emergency generator, and*

c) provided with a transitional source of emergency electrical power as specified in [2.3.16] *unless an emergency generator is provided capable both of supplying the services mentioned in that paragraph and of being automatically started and supplying the required load as quickly as is safe and practicable subject to a maximum of 45 s.*

2.3.14 It is accepted to apply the total consumer load in steps providing that:

- the total load is supplied within 45 seconds since power failure on the main switchboard
- the power distribution system is designed such that the declared maximum step loading is not exceeded
- the compliance of time delays and loading sequence with the above is demonstrated at ship's trials.

2.3.15 *Where the emergency source of electrical power is an accumulator battery it shall be capable of:*

a) carrying the emergency electrical load without recharging while maintaining the voltage of the battery throughout the discharge period within 12% above or below its nominal voltage

b) automatically connecting to the emergency switchboard in the event of failure of the main source of electrical power, and

c) immediately supplying at least those services specified in [3.6.7].

2.3.16 *The transitional source of emergency electrical power where required by* [2.3.13] item c), *shall consist of an accumulator battery which shall operate without recharging while maintaining the voltage of the battery throughout the discharge period within 12% above or below its nominal voltage and be so arranged as to supply automatically in the event of failure of either the main or the emergency source of electrical power for half an hour at least the services in* [3.6.7] *if they depend upon an electrical source for their operation.*

2.3.17 Where the emergency and/or transitional source of power is an uninterruptible power system (UPS), it is to comply with the requirement of Ch 2, Sec 6, [3].

2.3.18 Where the emergency and/or transitional emergency loads are supplied from a battery via an electronic converter or inverter, the maximum permitted d.c. voltage variations are to be taken as those on the load side of the converter or inverter.

Where the d.c. is converted into a.c. the maximum variations are not exceed those given in Ch 2, Sec 2, Tab 6.

2.3.19 If the emergency generator is fitted with control, alarm and safety systems based on electronic equipment, these systems are to be so arranged that, when in failure, there is still a possibility to operate the emergency generator manually.

A failure of the electronic governor is not considered.

2.3.20 For the emergency source of electrical power in passenger ships, see Pt D, Ch 11, Sec 5.

2.3.21 Ships assigned the additional service feature **SPxxx**, **SPxxx-capable**, **IPxxx** or **IPxxx-capable** with xxx greater than 60 are to comply, in addition to the requirements of this article, with the provisions of Pt D, Ch 11, Sec 5, [2].

2.4 Use of emergency generator in port

2.4.1 To prevent the generator or its prime mover from becoming overloaded when used in port, arrangements are to be provided to shed sufficient non-emergency loads to ensure its continued safe operation.

2.4.2 The prime mover is to be arranged with fuel oil filters and lubrication oil filters, monitoring equipment and protection devices as requested for the prime mover for main power generation and for unattended operation.

Note 1: Pt F, Ch 3, Sec 1, Tab 28 applies.

2.4.3 The fuel oil supply tank to the prime mover is to be provided with a low level alarm, arranged at a level ensuring sufficient fuel oil capacity for the emergency services for the period of time as required in [3.6].

2.4.4 The prime mover is to be designed and built for continuous operation and should be subjected to a planned maintenance scheme ensuring that it is always available and capable of fulfilling its role in the event of an emergency at sea.

2.4.5 Fire detectors are to be installed in the location where the emergency generator set and emergency switchboard are installed.

2.4.6 Means are to be provided to readily change over to emergency operation.

2.4.7 Control, monitoring and supply circuits for the purpose of the use of the emergency generator in port are to be so arranged and protected that any electrical fault will not influence the operation of the main and emergency services.

When necessary for safe operation, the emergency switchboard is to be fitted with switches to isolate the circuits.

2.4.8 Instructions are to be provided on board to ensure that, even when the vessel is underway, all control devices (e.g. valves, switches) are in a correct position for the independent emergency operation of the emergency generator set and emergency switchboard.

These instructions are also to contain information on the required fuel oil tank level, position of harbour/sea mode switch, if fitted, ventilation openings, etc.

3 Distribution

3.1 Earthed distribution systems

3.1.1 System earthing is to be effected by means independent of any earthing arrangements of the non-current-carrying parts.

3.1.2 Means of disconnection are to be fitted in the neutral earthing connection of each generator so that the generator may be disconnected for maintenance or insulation resistance measurements.

3.1.3 Generator neutrals may be connected in common, provided that the third harmonic content of the voltage wave form of each generator does not exceed 5%.

3.1.4 Where a switchboard is split into sections operated independently or where there are separate switchboards, neutral earthing is to be provided for each section or for each switchboard. Means are to be provided to ensure that the earth connection is not removed when generators are isolated.

3.1.5 Where for final sub-circuits it is necessary to locally connect a pole (or phase) of the sub-circuits to earth after the protective devices (e.g. in automation systems or to avoid electromagnetic disturbances), provision (e.g. d.c./d.c. converters or transformers) is to be made such that current unbalances do not occur in the individual poles or phases.

3.1.6 For high-voltage systems see Ch 2, Sec 13.

3.2 Insulated distribution systems

3.2.1 Every insulated distribution system*, whether primary or secondary* (see Note 1)*, for power, heating or lighting, shall be provided with a device capable of continuously monitoring the insulation level to earth* (i.e. the values of electrical insulation to earth) *and of giving an audible* and *visual indication of abnormally low insulation values* (see Ch 2, Sec 15).

Note 1: A primary system is one supplied directly by generators. Secondary systems are those supplied by transformers or converters.

3.2.2 For high-voltage systems see Ch 2, Sec 13.

3.3 Distribution systems with hull return

3.3.1 *Where the hull return system is used,* if permitted*, all final sub-circuits, i.e. all circuits fitted after the last protective device, shall be two-wire.*

The hull return is to be achieved by connecting to the hull one of the busbars of the distribution board from which the final sub-circuits originate.

3.4 General requirements for distribution systems

3.4.1 The distribution system is to be such that the failure of any single circuit will not endanger or impair primary essential services and will not render secondary essential services inoperative for longer periods.

3.4.2 No common switchgear (e.g. contactors for emergency stop) is to be used between the switchboard's busbars and two primary non duplicated essential services.

3.4.3 *Where the main source of electrical power is necessary for propulsion and steering of the ship, the system shall be so arranged that the electrical supply to equipment necessary for propulsion and steering and to ensure safety of the ship will be maintained or immediately restored in the case of loss of any one of the generators in service.*

3.4.4 Ships assigned the additional service feature **SPxxx**, **SPxxx-capable**, **IPxxx** or **IPxxx-capable** with xxx greater than 60 are to comply, in addition to the requirements of this article, with the provisions of Pt D, Ch 11, Sec 5, [1.2.1].

3.5 Main distribution of electrical power

3.5.1 Where the main source of electrical power is necessary for propulsion of the ship, the main busbar is to be divided into at least two parts which are normally to be connected by circuit breakers or other approved means such as circuit breakers without tripping mechanisms or disconnecting links or switches by means of which busbars can be split safely and easily.

Bolted links, for example bolted bus bar sections, are not accepted.

The connection of generating sets and associated auxiliaries and other duplicated equipment is to be equally divided between the parts as far as practicable, so that in the event of damage to one section of the switchboard the remaining parts are still supplied.

3.5.2 Two or more units serving the same consumer (e.g. main and standby lubricating oil pumps) are to be supplied by individual separate circuits without the use of common feeders, protective devices or control circuits.

This requirement is satisfied when such units are supplied by separate cables from the main switchboard or from two independent section boards.

3.5.3 *A main electric lighting system which shall provide illumination throughout those parts of the ship normally accessible to and used by (passengers or) crew shall be supplied from the main source of electrical power.*

3.6 Emergency distribution of electrical power

3.6.1 *The emergency switchboard shall be supplied during normal operation from the main switchboard by an interconnector feeder which shall be adequately protected at the main switchboard against overload and short-circuit and which is to be disconnected automatically at the emergency switchboard upon failure of the main source of electrical power.*

Where the system is arranged for feedback operation, the interconnector feeder is also to be protected at the emergency switchboard at least against short-circuit.

3.6.2 *In order to ensure ready availability of the emergency source of electrical power, arrangements shall be made where necessary to disconnect automatically non-emergency circuits from the emergency switchboard to ensure that power shall be available to the emergency circuits.*

3.6.3 *The emergency source of electrical power shall be capable of supplying simultaneously at least the following services for the periods specified hereafter, if they depend upon an electrical source for their operation:*

a) *for a period of 3 hours, emergency lighting at every muster and embarkation station and over the sides*

b) *for a period of 18 hours, emergency lighting:*

   1) *in all service and accommodation alleyways, stairways and exits, personnel lift cars and personnel lift trunks*

   2) *in the machinery spaces and main generating stations including their control positions*

   3) *in all control stations, machinery control rooms, and at each main and emergency switchboard*

   4) *at all stowage positions for fire-fighter's outfits*

   5) *at the steering gear, and*

   6) *at the fire pump referred to in e) below, at the sprinkler pump, if any, at the emergency bilge pump, if any, and at the starting positions of their motors*

c) *for a period of 18 hours:*

   1) *the navigation lights and other lights required by the International Regulations for Preventing Collisions at Sea in force*

   2) *the VHF radio installation required by Regulation IV/7.1.1 and IV/7.1.2 of SOLAS 1974 as amended, and, if applicable:*

      - *the MF radio installation required by Regulations IV/9.1.1, IV/9.1.2, IV/10.1.2 and IV/10.1.3*
      - *the ship earth station required by Regulation IV/10.1.1, and*
      - *the MF/HF radio installation required by Regulations IV/11.1.1 and IV/11.1.2.*

d) *for a period of 18 hours:*

   1) *all internal communication equipment as required in an emergency* [3.6.4]

   2) *the shipborne navigational equipment as required by Regulation V/19 where such provision is unreasonable or impracticable the Society may waive this requirement for ships of less than 5 000 gross tonnage*

   3) *the fire detection and fire alarm systems, and*

   4) *intermittent operation of the daylight signalling lamp, the ship's whistle, the manually operated call points and all internal signals* (see [3.6.5]*) that are required in an emergency unless such services have an independent supply for the period of 18 hours from an accumulator battery suitably located for use in an emergency*

e) *for a period of 18 hours: one of the fire pumps required by the relevant provisions of* Part C, Chapter 4*, if dependent upon the emergency generator for its source of power*

f) *for the period of time required in* Ch 1, Sec 14, [2]*, the steering gear where it is required to be so supplied.*

g) On ships *assigned* the additional service feature **SPxxx** or **SPxxx-capable**, **IPxxx** *or* **IPxxx-capable** with length greater than or equal to 50m, *for a period of half an hour, any watertight door required by* Pt D, Ch 11, Sec 2 *to be power-operated together with their indicators and warning signals.*

3.6.4 Internal communication equipment required in an emergency generally includes:

a) the means of communication between the navigation bridge and the steering gear compartment

b) the means of communication between the navigation bridge and the position in the machinery space or control room from which the engines are normally controlled

c) the means of communication which is provided between the bridge and the radio communication station, if any

d) the public address system.

3.6.5 Internal signals required in an emergency generally include:

a) general alarm

b) watertight door indication.

3.6.6 In a ship engaged regularly in voyages of short duration, i.e. voyages where the route is no greater than 20 nautical miles offshore or where the vessel has a class notation "Coastal Navigation", the Society may, if satisfied that an adequate standard of safety would be attained, accept a lesser period than the 18-hour period specified in [3.6.3], items b) to e), but not less than 12 hours.

Note 1: In ships for which Solas is not applicable, a reduced period of time may be accepted.

Note 2: For passenger ships see Pt D, Ch 11, Sec 5.

3.6.7 *The transitional source of emergency electrical power, where required, shall supply for half an hour at least the following services if they depend upon an electrical source for their operation:*

a) *the lighting required by* [3.6.3], items a), b) and c) 1) *for this transitional phase, the required emergency electric lighting, in respect of the machinery space and the accommodation and service spaces may be provided by permanently fixed, individual, automatically charged, relay operated accumulator lamps, and*

b) *all services required by* [3.6.3], items d) 1), d) 3) and d) 4)*, unless such services have an independent supply for the period specified from an accumulator battery suitably located for use in an emergency.*

3.7 Shore supply

3.7.1 Where arrangements are made for supplying the electrical installation from a source on shore or elsewhere, a suitable connection box is to be installed on the ship in a convenient location to receive the flexible cable from the external source.

3.7.2 Permanently fixed cables of adequate rating are to be provided for connecting the box to the main switchboard.

3.7.3 Where necessary for systems with earthed neutrals, the box is to be provided with an earthed terminal for connection between the shore's and ship's neutrals or for connection of a protective conductor.

3.7.4 The connection box is to contain a circuit-breaker or a switch-disconnector and fuses.

The shore connection is to be protected against short-circuit and overload however, the overload protection may be omitted in the connection box if provided on the main switchboard.

3.7.5 Means are to be provided for checking the phase sequence of the incoming supply in relation to the ship's system.

3.7.6 The cable connection to the box is to be provided with at least one switch-disconnector on the main switchboard.

3.7.7 The shore connection is to be provided with an indicator at the main switchboard in order to show when the cable is energised.

3.7.8 At the connection box a notice is to be provided giving full information on the nominal voltage and frequency of the installation.

3.7.9 The switch-disconnector on the main switchboard is to be interlocked with the main generator circuit-breakers in order to prevent its closure when any generator is supplying the main switchboard.

3.7.10 Adequate means are to be provided to equalise the potential between the hull and the shore when the electrical installation of the ship is supplied from shore.

3.8 Supply of motors

3.8.1 A separate final sub-circuit is to be provided for every motor required for an essential service (and for every motor rated at 1 kW or more).

3.8.2 Each motor is to be provided with controlgear ensuring its satisfactory starting.

Direct on line starters are accepted if the voltage drop does not exceed 15% of the network voltage.

3.8.3 Efficient means are to be provided for the isolation of the motor and its associated control gear from all live poles of the supply.

Where the control gear is mounted on or adjacent to a switchboard, a disconnecting switch in the switchboard may be used for this purpose.

Otherwise, a disconnecting switch within the control gear enclosure or a separate enclosed disconnecting switch is to be provided.

3.8.4 Where the starter or any other apparatus for disconnecting the motor is remote from the motor itself, one of the following is to be arranged:

a) provision for locking the circuit disconnecting switch in the OFF position

b) an additional disconnecting switch fitted near the motor

c) provision such that the fuses in each live pole or phase can be readily removed and retained by persons authorised to have access to the motor.

3.8.5 Unless automatic restarting is required, motor control circuits are to be designed so as to prevent any motor from unintentional automatic restarting after a stoppage due to over-current tripping or a fall in or loss of voltage, if such starting is liable to cause danger. Where reverse-current braking of a motor is provided, provision is to be made for the avoidance of reversal of the direction of rotation at the end of braking, if such reversal may cause danger.

3.9 Specific requirements for special power services

3.9.1 For the supply and characteristics of the distribution of the following services see the requirements listed:

- steering gear: Ch 1, Sec 14, [2]
- fire-extinguishing and detecting systems: Ch 4, Sec 15
- permanently installed submersible bilge pump: Ch 1, Sec 10, [6.7.7]
- ventilation fans, fuel pumps: Ch 4, Sec 2, [2.1]
- pumps discharging overboard above the lightest waterline and in way of the area of lifeboat and liferaft launching: Ch 1, Sec 10, [5.2.4].

3.9.2 All power circuits terminating in a bunker or cargo space are to be provided with a multiple-pole switch outside the space for disconnecting such circuits.

3.10 Power supply to heaters

3.10.1 Each heater rated more than 16 A is to be connected to a separate final circuit.

3.11 Reefer containers

3.11.1 Where the ship is intended to carry refrigerated containers, provision of suitable means for preventing earth faults on containers from affecting the main distribution system is to be made (galvanic isolation, tripping of the faulty circuit).

3.12 Power supply to final sub-circuits: socket outlet and lighting

3.12.1 Final sub-circuits for lighting supplying more than one lighting point and for socket-outlets are to be fitted with protective devices having a current rating not exceeding 16 A.

3.12.2 In spaces such as:

- main and large machinery spaces
- large galleys
- passageways
- stairways leading to boat-decks
- public spaces

there is to be more than one final sub-circuit for lighting such that failure of any one circuit does not reduce the lighting to an insufficient level.

3.12.3 Where the emergency installation is required, one of the circuits in [3.12.2] may be supplied from the emergency source of power.

3.12.4 All lighting circuits terminating in a bunker or cargo space are to be provided with a multiple-pole switch outside the space for disconnecting such circuits.

3.12.5 The number of lighting points (lamps) supplied by a final sub-circuit having a current rating not exceeding 16 A is not to exceed the following maxima:

- 10 lamps for voltage up to 55 V
- 14 lamps for voltage from 56 V up to 120 V
- 24 lamps for voltage from 121 V to 250 V.

3.12.6 Final sub-circuits for lighting in accommodation spaces may include socket-outlets. In that case, each socket-outlet counts for two lighting points.

3.13 Navigation lights

3.13.1 Navigation lights are to be connected separately to a distribution board specially reserved for this purpose.

3.13.2 The distribution board in [3.13] is to be supplied from two alternative circuits, one from the main source of power and one from the emergency source of power (see also [3.6]).

The transfer of supply is to be practicable from the bridge, for example by means of a switch.

3.13.3 Each navigation light is to be controlled and protected in each insulated pole by a double-pole switch and a fuse or, alternatively, by a double-pole circuit-breaker, fitted on the distribution board referred to in [3.13].

3.13.4 Where there are double navigation lights, i.e. lights with two lamps or where for every navigation light a spare is also fitted, the connections to such lights may run in a single cable provided that means are foreseen in the distribution board to ensure that only one lamp or light may be supplied at any one time.

3.13.5 Each navigation light is to be provided with an automatic indicator giving audible and/or visual warning in the event of failure of the light. If an audible device alone is fitted, it is to be connected to a separate source of supply from that of the navigation lights, for example an accumulator (storage) battery.

If a visual signal is used connected in series with the navigation light, means are to be provided to prevent the extinction of the navigation light due to the failure of the visual signal.

A minimum level of visibility is to be assured in the case of use of dimmer devices.

3.14 General emergency alarm system

3.14.1 An electrically operated bell or klaxon or other equivalent warning system installed in addition to the ship's whistle or siren, for sounding the general emergency alarm signal, is to comply with the requirements of this sub-article.

3.14.2 The general emergency alarm system is to be supplemented by either a public address system complying with the requirements in [3.15] or other suitable means of communication.

3.14.3 Entertainment sound system is to be automatically turned off when the general alarm system is activated.

3.14.4 The system is to be continuously powered and is to have an automatic change-over to a standby power supply in case of loss of normal power supply.

An alarm is to be given in the event of failure of the normal power supply.

3.14.5 The system is to be powered by means of two circuits, one from the ship's main supply and the other from the emergency source of electrical power required by [2.3] and [3.6].

3.14.6 The system is to be capable of operation from the navigation bridge and, except for the ship’s whistle, also from other strategic points.

Note 1: Other strategic points are taken to mean those locations, other than the navigation bridge, from where emergency situations are intended to be controlled and the general alarm system can be activated. A fire control station or a cargo control station should normally be regarded as strategic points.

3.14.7 The alarm is to continue to function after it has been triggered until it is manually turned off or is temporarily interrupted by a message on the public address system.

3.14.8 The alarm system is to be audible throughout all the accommodation and normal crew working spaces.

3.14.9 The minimum sound pressure level for the emergency alarm tone in interior and exterior spaces is to be 80 dB (A) and at least 10 dB (A) above ambient noise levels occurring during normal equipment operation with the ship underway in moderate weather.

3.14.10 In cabins without a loudspeaker installation, an electronic alarm transducer, e.g. a buzzer or similar, is to be installed.

3.14.11 The sound pressure level at the sleeping position in cabins and in cabin bathrooms is to be at least 75 dB (A) and at least 10 dB (A) above ambient noise levels.

3.14.12 For cables used for the general emergency alarm system, see [9.6.1].

3.15 Public address system

3.15.1 The public address system is to be a loudspeaker installation enabling the broadcast of messages into all spaces where people on board are normally present.

In spaces such as under deck passageways, bosun’s locker, hospital and pump rooms, the public address system may not be required.

3.15.2 Where the public address system is used to supplement the general emergency alarm system as per [3.14.2], it is to be continuously powered from the emergency source of electrical power required by [2.3] and [3.6].

3.15.3 The system is to allow for the broadcast of messages from the navigation bridge and from other places on board the ship as deemed necessary.

3.15.4 The system is to be protected against unauthorised use.

3.15.5 The system is to be installed with regard to acoustically marginal conditions and not require any action from the addressee.

3.15.6 Where an individual loudspeaker has a device for local silencing, an override arrangement from the control station(s), including the navigation bridge, is to be in place.

3.15.7 With the ship underway in normal conditions, the minimum sound pressure level for broadcasting emergency announcements is to be:

a) in interior spaces, 75 dB (A) and at least 20 dB (A) above the speech interference level

b) in exterior spaces, 80 dB (A) and at least 15 dB (A) above the speech interference level.

With respect to cabin/state rooms, the sound pressure level is to be attained as required inside such spaces during sea trials.

3.16 Combined general emergency alarm-public address system

3.16.1 Where the public address system is the only means for sounding the general emergency alarm signal and the fire alarm, in addition to the requirements of [3.14] and [3.15], the following are to be satisfied:

- the system automatically overrides any other non emergency input system when an emergency alarm is required
- the system automatically overrides any volume control provided to give the required output for the emergency mode when an emergency alarm is required
- the system is arranged to prevent feedback or other interference
- the system is arranged to minimise the effect of a single failure so that the alarm signal is still audible (above ambient noise levels) also in the case of failure of any one circuit or component, by means of the use of:
  - multiple amplifiers
  - segregated cable routes to public rooms, alleyways, stairways and control stations
  - more than one device for generating electronic sound signal
  - electrical protection for individual loudspeakers against short-circuits.

3.17 Control and indication circuits

3.17.1 For the supply of automation systems, comprising control, alarm and safety system, see the requirements of Part C, Chapter 3.

3.17.2 Control and indicating circuits relative to primary essential services are to be branched off from the main circuit in which the relevant equipment is installed. Equivalent arrangements may be accepted by the Society.

3.17.3 Control and indicating circuits relative to secondary essential services and to non-essential services may be supplied by distribution systems reserved for the purpose to the satisfaction of the Society.

3.18 Power supply to the speed control systems of main propulsion engines

3.18.1 Electrically operated speed control systems of main engines are to be fed from the main source of electrical power.

3.18.2 Where more than one main propulsion engine is foreseen, each speed control system is to be provided with an individual supply by means of separate wiring from the main switchboard or from two independent section boards.

Where the main busbars are divided into two sections, the governors are, as far as practicable, to be supplied equally from the two sections.

3.18.3 In the case of propulsion engines which do not depend for their operation on electrical power, i.e. pumps driven from the main engine, the speed control systems are to be fed both from the main source of electrical power and from an accumulator battery for at least 15 minutes or from a similar supply source.

Such battery may also be used for other services such as automation systems, where foreseen.

3.19 Power supply to the speed control systems of generator sets

3.19.1 Each electrically operated control and/or speed control system of generator sets is to be provided with a separate supply from the main source of electric power and from an accumulator battery for at least 15 minutes or from a similar supply source.

3.19.2 The speed control system of generator sets is to be supplied from the main switchboard or from independent section boards.

Where the main busbars are divided into two sections, the governors are, as far as practicable, to be supplied from the sections to which the relevant generators are connected.

3.20 Installation of water-based local application fire-fighting systems (FWBLAFFS)

3.20.1 The system is to be capable of manual release.

3.20.2 The activation of the fire-fighting system is not to result in loss of electrical power or reduction of the manoeuvrability of the ship.

3.20.3 The system and its components are to be designed to withstand ambient temperature changes, vibration, humidity, shock, impact, clogging and corrosion normally encountered in machinery spaces. Components within the protected spaces are to be designed to withstand the elevated temperatures which could occur during a fire.

3.20.4 Degrees of protection are to be in accordance with [4.2].

3.20.5 Systems requiring an external power source are to be supplied by the main power source.

3.20.6 In case of activation of the system, an alarm in accordance with Ch 4, Sec 6, [4.7.4] is to be activated.

3.21 Integrated cargo and ballast systems on tankers

3.21.1 Integrated electric systems used to drive both cargo and ballast pumps on tankers, including control and safety systems, are to comply with the provisions of systems on tankers.

3.22 Harmonic distortion for ship electrical distribution system including harmonics filters

3.22.1 Where harmonic filters are installed on main busbars of electrical distribution system, other than those installed for single application frequency drives such as pump motors, the ships are to be fitted with facilities to continuously monitor the levels of harmonic distortion experienced on the main busbar. The crew is to be alerted when the level of harmonic distortion exceed the acceptable limits.

3.22.2 Where the electrical distribution system on board a ship includes harmonic filters the system integrator of the distribution system is to show, by calculation, the effect of a failure of a harmonic filter on the level of harmonic distortion experienced.

3.22.3 The system integrator of the distribution system is to provide the Society, for information, with guidance documenting permitted modes of operation of the electrical distribution system while maintaining harmonic distortion levels within acceptable limits during normal operation as well as following the failure of any combination of harmonic filters

3.22.4 Arrangements are to be provided to alert the crew in the event of activation of the protection of a harmonic filter circuit.

3.22.5 A harmonic filter is to be arranged as a three phase unit with individual protection of each phase. The activation of the protection arrangement in a single phase is to result in automatic disconnection of the complete filter.

3.22.6 A current unbalance detection system, independent of the overcurrent protection, is to be provided in order to alert the crew in case of current unbalance.

3.22.7 Additional protection for the individual capacitor element as e.g. relief valve or overpressure disconnector in order to protect against damage from rupturing may be considered, depending on the type of capacitors used.

4 Degrees of protection of the enclosures

4.1 General

4.1.1 The minimum required degree of protection for electrical equipment, in relation to the place of installation, is generally that specified in Tab 2.

4.1.2 Equipment supplied at nominal voltages in excess of 500 V and accessible to non-authorised personnel (e.g. equipment not located in machinery spaces or in locked compartments under the responsibility of the ship's officers) is to have a degree of protection against touching live parts of at least IP 4X.

4.1.3 In addition to the requirements of this paragraph, equipment installed in spaces with an explosion hazard is also subject to the provisions of Ch 2, Sec 2, [6].

4.1.4 The enclosures of electrical equipment for the monitoring and control of watertight doors which are situated below the bulkhead deck are to provide suitable protection against the ingress of water.

In particular, the minimum required degree of protection is to be:

- IP X7 for electric motors, associated circuits and control components
- IP X8 for door position indicators and associated circuit components
- IP X6 for door movement warning signals.

Note 1: The water pressure testing of the enclosures protected to IP X8 is to be based on the pressure that may occur at the location of the component during flooding for a period of 36 hours.

4.1.5 This requirement applies to ships with service notation **bulk carrier**, **bulk carrier ESP**, **ore carrier ESP**, **combination carrier /OBO ESP**, **combination carrier /OOC ESP**, **self-unloading bulk carrier ESP**, as described in Pt A, Ch 1, Sec 2, [4.3] and provided with a dewatering system (see Ch 1, Sec 10, [6.6.7]). The enclosures of electrical equipment for the dewatering system installed in any of the forward dry spaces are to provide protection to IPX8 standard for a water head equal to the height of the space in which the electrical equipment is installed for a time duration of at least 24 hours.

Table 2 : Minimum required degrees of protection

Condition in location	Example of location	Switchboar, control gear, motorstarters	Generators	Motors	Transformers	Luminaires	Heating appliances	Cooking appliances	Socket outlets	Accessories (e.g. switches, connection boxes)
Danger of touching live parts only	Dry accommodation spaces, dry control rooms	IP 20	X **(1)**	IP 20	IP 20	IP 20	IP 20	IP 20	IP 20	IP 20
Danger of dripping liquid and/or moderate mechanical damage	Control rooms, wheel-house, radio room	IP 22	X	IP 22	IP 22	IP 22	IP 22	IP 22	IP 22	IP 22
	Engine and boiler rooms above floor	IP 22	IP 22	IP 22	IP 22	IP 22	IP 22	IP 22	IP 44	IP 44
	Steering gear rooms	IP 22	IP 22	IP 22	IP 22	IP 22	IP 22	X	IP 44	IP 44
	Emergency machinery rooms	IP 22	IP 22	IP 22	IP 22	IP 22	IP 22	X	IP 44	IP 44
	General storerooms	IP 22	X	IP 22	IP 22	IP 22	IP 22	X	IP 22	IP 44
	Pantries	IP 22	X	IP 22	IP 22	IP 22	IP 22	IP 22	IP 44	IP 44
	Provision rooms	IP 22	X	IP 22	IP 22	IP 22	IP 22	X	IP 44	IP 44
	Ventilation ducts	X	X	IP 22	X	X	X	X	X	X
Increased danger of liquid and/or mechanical damage	Bathrooms and / or showers	X	X	X	X	IP 34	IP 44	X	IP 55	IP 55
	Engine and boiler rooms below floor	X	X	IP 44	X	IP 34	IP 44	X	X	IP 55
	Closed fuel oil separator rooms	IP 44	X	IP 44	IP 44	IP 34	IP 44	X	X	IP 55
	Closed lubricating oil separator rooms	IP 44	X	IP 44	IP 44	IP 34	IP 44	X	X	IP 55
Increased danger of liquid and mechanical damage	Ballast pump rooms	IP 44	X	IP 44 **(2)**	IP 44 **(2)**	IP 34	IP 44	X	IP 55	IP 55
	Refrigerated rooms	X	X	IP 44	X	IP 34	IP 44	X	IP 55	IP 55
	Galleys and laundries	IP 44	X	IP 44	IP 44	IP 34	IP 44	IP 44	IP 44	IP 44
	Public bathrooms and shower	X	X	IP 44	IP 44	IP 34	IP 44	X	IP 44	IP 44
Danger of liquid spraying, presence of cargo dust, serious mechanical damage, aggressive fumes	Shaft or pipe tunnels in double bottom	IP 55	X	IP 55	IP 55	IP 55	IP 55	X	IP 56	IP 56
	Holds for general cargo	X	X	IP 55	X	IP 55	IP 55	X	IP 56	IP 56
	Ventilation trunks	X	X	IP 55	X	X	X	X	X	X
Danger of liquid in massive quantities	Open decks	IP 56	X	IP 56	X	IP 55	IP 56	X	IP 56	IP 56

(1) The symbol "X" denotes equipment which it is not advised to install.

(2) Electric motors and starting transformers for lateral thrust propellers located in spaces similar to ballast pump rooms may have degree of protection IP 22.

4.2 Installation of electrical and electronic equipment in engine rooms protected by fixed water-based local application fire-fighting systems (FWBLAFFS)

4.2.1 Unless it is essential for safety or operational purposes, electrical and electronic equipment is not to be located within areas protected by FWBLAFFS and in adjacent areas where water may extend.

The electrical and electronic equipment located within areas protected by FWBLAFFS and those within adjacent exposed to direct spray are to have a degree of protection not less than IP44.

Electrical and electronic equipment within adjacent areas not exposed to direct spray may have a lower degree of protection provided evidence of suitability for use in these areas is submitted taking into account the design and equipment layout, e.g. position of inlet ventilation openings, filters, baffles, etc. to prevent or restrict the ingress mist/spray into the equipment. The cooling airflow for the equipment is to be assured.

Note 1: Definitions (see Fig 2):

- protected space is a machinery space where a FWBLAFFS is installed
- protected areas: areas within a protected space which is required to be protected by FWBLAFFS
- adjacent areas:
  - areas other those protected areas, exposed
  - areas other those defined above, where water may extend.

Note 2: Additional precautions may be required to be taken in respect of:

- tracking as the result of water entering the equipment
- potential damage as the result of residual salts from sea water systems
- high-voltage installations
- personnel protection against electric shock

Equipment may require maintenance after being subjected to water mist/spray.

Figure 2 : Definitions of areas

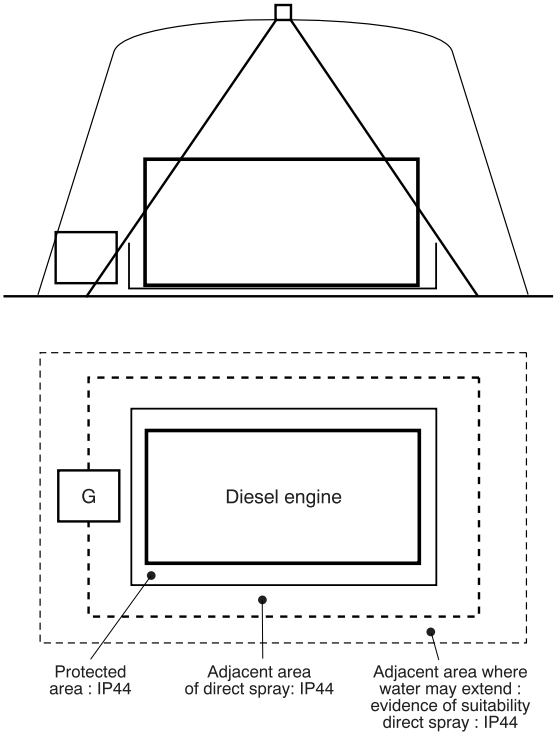

5 Diversity (demand) factors

5.1 General

5.1.1 The cables and protective devices of final sub-circuits are to be rated in accordance with their connected load.

5.1.2 Circuits supplying two or more final sub-circuits are to be rated in accordance with the total connected load subject, where justifiable, to the application of a diversity (demand) factor.

5.1.3 A diversity (demand) factor may be applied provided that the known or anticipated operating conditions in a particular part of an installation are suitable for the application of diversity.

6 Environmental categories of the equipment

6.1 Environmental categories

6.1.1 The environmental categories of the electrical equipment, in relation to the place of installation, are generally to be those specified in Tab 3.

6.1.2 For ships operating outside the tropical belt, the maximum ambient air temperature may be assumed as equal to + 40°C instead of + 45°C, so that the first characteristic numeral changes from 1 to 3.

Table 3 : Required environmental categories

Location within main area				
Main areas on board	General	Inside cubicles, desks, etc.	On machinery such as internal combustion engines, compressors	Masts
Machinery spaces, steering gear	EC21	EC31	EC23	X **(1)**
Control room, accommodation	EC21 EC11C	EC31	X	X
Bridge	EC21B EC11BC	EC31B	X	X
Pump room, holds, rooms without heating	EC41	X	X	X
Exposed decks	EC41S EC41BS	X	X	EC42S EC42BS
(1) The symbol "X" denotes locations which are generally not applicable.				

7 Electrical protection

7.1 General requirements for overcurrent protection

7.1.1 Electrical installations are to be protected against accidental overcurrents including short-circuit.

The choice, arrangement and performance of the various protective devices are to provide complete and coordinated automatic protection in order to ensure as far as possible:

- continuity of service in the event of a fault, through coordinated and discriminative action of the protective devices
- elimination of the effects of faults to reduce damage to the system and the hazard of fire as far as possible.

Note 1: An overcurrent is a current exceeding the nominal current.

Note 2: A short-circuit is the accidental connection by a relatively low resistance or impedance of two or more points in a circuit which are normally at different voltages.

7.1.2 Devices provided for overcurrent protection are to be chosen according to the requirements, especially with regard to overload and short-circuit.

Note 1: Overload is an operating condition in an electrically undamaged circuit which causes an overcurrent.

7.1.3 Systems are to be such as to withstand the thermal and electrodynamic stresses caused by the possible overcurrent, including short-circuit, for the admissible duration.

7.2 Short-circuit currents

7.2.1 In calculating the maximum prospective short-circuit current, the source of current is to include the most powerful configuration of generators which can be simultaneously connected (as far as permitted by any interlocking arrangements), and the maximum number of motors which are normally simultaneously connected in the system.

The maximum number of generators or transformers is to be evaluated without taking into consideration short-term parallel operation (e.g. for load transfer) provided that suitable interlock is foreseen.

7.2.2 Short-circuit current calculations are to be performed in accordance with a method recognised by the Society, such as that given in IEC Publication 61363-1.

7.2.3 In the absence of precise data concerning the characteristics of generators, accumulator batteries and motors, the maximum short-circuit currents on the main busbars may be calculated as follows:

- for alternating current systems:

  $I_{ac} = 10\ I_{TG} + 3{,}5\ I_{TM}$

  $I_{pk} = 2{,}4\ I_{ac}$
- for direct current systems supplied by batteries:

  $I_p = K\ C_{10} + 6\ I_{TM}$

where:

I_p : Maximum short-circuit current

I_{ac} : r.m.s. value of the symmetrical component (at the instant T/2)

I_{pk} : Maximum peak value

I_{TG} : Rated current of all generators which can be connected simultaneously

C_{10} : Battery capacity in Ah for a discharge duration of 10 hours

K : Ratio of the short-circuit current of the batteries to C_{10} (see Note 1)

I_{TM} : Rated current of all motors which are normally simultaneously connected in the system.

Note 1: For stationary batteries the following values may be assumed for guidance:

- vented lead-acid batteries: K = 8
- vented alkaline type batteries intended for discharge at low rates corresponding to a battery duration exceeding three hours: K = 15
- sealed lead-acid batteries having a capacity of 100 Ah or more or alkaline type batteries intended for discharge at high rates corresponding to a battery duration not exceeding three hours: K = 30.

7.2.4 Converters used for power supply are to supply a short-circuit current sufficient for selective tripping of downstream protective devices without sustaining any internal damage.

7.3 Selection of equipment

7.3.1 Circuit-breakers of withdrawable type are required where they are not suitable for isolation.

7.3.2 Equipment is to be chosen on the basis of its rated current and its making/breaking capacity.

7.3.3 In the selection of circuit-breakers with intentional short-time delay for short-circuit release, those of utilisation category B are to be used and they are to be selected also taking into account their rated short-time withstand current capacity (Icw).

For circuit-breakers without intentional short-time delay for short-circuit release, circuit breakers of utilisation category A may be used and they are to be selected according to their rated service short-circuit breaking capacity (Ics).

Note 1: For the purpose of these Rules, utilisation categories A and B are defined as follows:

- utilisation category A: circuit-breakers not specifically intended for selectivity under short-circuit conditions with respect to other short-circuit protective devices in series on the load side, i.e. without an intentional short-time delay provided for selectivity under short-circuit conditions
- utilisation category B: circuit-breakers specifically intended for selectivity under short-circuit conditions with respect to other short-circuit protective devices in series on the load side, i.e. with an intentional short-time delay (which may be adjustable) provided for selectivity under short-circuit conditions.

7.3.4 For duplicated essential services and non-essential services, circuit-breakers may be selected according to their ultimate short-circuit breaking capacity (Icu).

7.3.5 For switches, the making/breaking capacity is to be in accordance with utilisation category AC-22 A or DC-22 A (in compliance with IEC Publication 60947-3).

7.3.6 For fuse-switch disconnectors or switch-disconnector fuse units, the making/breaking capacity is to be in accordance with utilisation categories AC-23 A or DC-23 A (in compliance with IEC Publication 60947-3).

7.4 Protection against short-circuit

7.4.1 Protection against short-circuit currents is to be provided by circuit- breakers or fuses.

7.4.2 The rated short-circuit breaking capacity of every protective device is to be not less than the maximum prospective value of the short-circuit current at the point of installation at the instant of contact separation.

7.4.3 The rated short-circuit making capacity of every mechanical switching device intended to be capable of being closed on short-circuit is to be not less than the maximum value of the short-circuit current at the point of installation. On alternating current this maximum value corresponds to the peak value allowing for maximum asymmetry.

7.4.4 Every protective device or contactor not intended for short-circuit interruption is to be adequate for the maximum short-circuit current liable to occur at the point of installation having regard to the time required for the short-circuit to be removed.

7.4.5 The use of a protective device not having a short-circuit breaking or making capacity at least equal to the maximum prospective short-circuit current at the point where it is installed is permitted, provided that it is backed up on the generator side by a fuse or by a circuit-breaker having at least the necessary short-circuit rating and not being the generator circuit-breaker.

7.4.6 The same fuse or circuit-breaker may back up more than one circuit-breaker where the circuits concerned do not involve essential services.

7.4.7 The short-circuit performance of the back-up arrangement is to be equal to the requirements of IEC Publication 60947-2 for a single circuit-breaker having the same short-circuit performance category as the backed-up circuit-breaker and rated for the maximum prospective short-circuit level at the supply terminals of the arrangement.

7.4.8 Circuit-breakers with fuses connected to the load side may be used, provided the back-up fuses and the circuit-breakers are of coordinated design, in order to ensure that the operation of the fuses takes place in due time so as to prevent arcing between poles or against metal parts of the circuit-breakers when they are submitted to overcurrents involving the operation of the fuse.

7.4.9 When determining the performance requirements for the above-mentioned back-up protection arrangement, it is permissible to take into account the impedance of the various circuit elements of the arrangement, such as the impedance of a cable connection when the backed-up circuit-breaker is located away from the back-up breaker or fuse.

7.5 Continuity of supply and continuity of service

7.5.1 The protection of circuits is to be such that a fault in one service does not cause the loss of any essential services.

7.5.2 The protection of the emergency circuit is to be such that a failure in one circuit does not cause a loss of other emergency services.

Note 1: The continuity of supply for the primary essential services and the continuity of service for the secondary essential services are to be ensured.

The continuity of supply is the condition for which during and after a fault in a circuit, the supply to the healthy circuits (see circuit 3 in Fig 3) is permanently ensured.

The continuity of service is the condition for which after a fault in a circuit has been cleared, the supply to the healthy circuits (see circuit 3 in Fig 3) is re-established.

Figure 3 : Continuity of supply and continuity of service

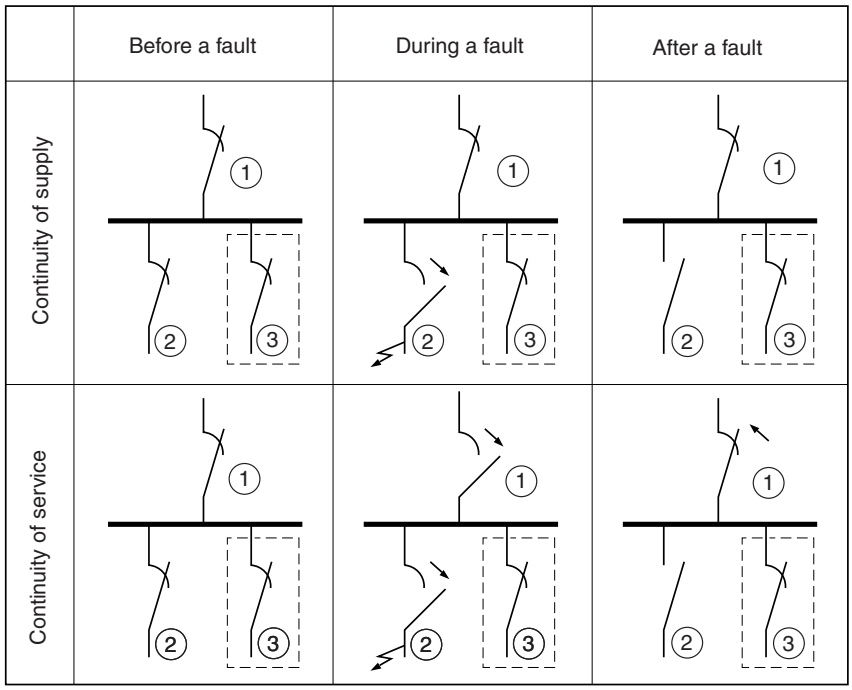

7.6 Protection against overload

7.6.1 Devices provided for overload protection are to have a tripping characteristic (overcurrent-trip time) adequate for the overload ability of the elements of the system to be protected and for any discrimination requirements.

7.6.2 The use of fuses up to 320 A for overload protection is permitted.

7.7 Localisation of overcurrent protection

7.7.1 Short-circuit protection is to be provided for every non-earthed conductor.

7.7.2 Overload protection is to be provided for every non-earthed conductor nevertheless, in insulated single-phase circuits or insulated three-phase circuits having substantially balanced loads, the overload protection may be omitted on one conductor.

7.7.3 Short-circuit and overload protective devices are not to interrupt earthed conductors, except in the case of multiple disconnection devices which simultaneously interrupt all the conductors, whether earthed or not.

7.7.4 Electrical protection is to be located as close as possible to the origin of the protected circuit.

7.8 Protection of generators

7.8.1 Generators are to be protected against short-circuits and overloads by multipole circuit-breakers.

For generators not arranged to operate in parallel with a rated output equal to or less than 50 kVA, a multipole switch with a fuse in each insulated phase on the generator side may be accepted.

7.8.2 When multipole switch and fuses are used, the fuse rating is to be maximum 110% of the generator rated current.

7.8.3 Where a circuit-breaker is used:

a) The overload protection is to trip the generator circuit-breaker at an overload between 10% and 50%. For an overload of 50% of the rated current of the generator, the time delay is not to exceed 2 minutes. However, the figure of 50% or the time delay of 2 minutes may be exceeded if the construction of the generator permits this.

b) the setting of the short-circuit protection is to instantaneously trip the generator circuit-breaker at an overcurrent less than the steady short-circuit current of the generator. Short time delays (e.g. from 0,5 s to 1 s) may be introduced for discrimination requirements in "instantaneous" tripping devices.

7.8.4 For emergency generators the overload protection may, instead of disconnecting the generator automatically, give a visual and audible alarm in a permanently attended space.

7.8.5 After disconnection of a generator due to overload, the circuit-breaker is to be ready for immediate reclosure.

7.8.6 Generator circuit-breakers are to be provided with a reclosing inhibitor which prevents their automatic reclosure after tripping due to a short-circuit.

7.8.7 Generators having a capacity of 1500 kVA or above are to be equipped with a suitable protective device or system which, in the event of a short-circuit in the generator or in the supply cable between the generator and its circuit-breaker, will de-excite the generator and open the circuit-breaker (e.g. by means of differential protection).

7.8.8 *Where the main source of electrical power is necessary for the propulsion of the ship, load shedding or other equivalent arrangements are to be provided to protect the generators against sustained overload.*

7.8.9 Arrangements are to be made to disconnect or reduce automatically the excess load when the generators are overloaded in such a way as to prevent a sustained loss of speed and/or voltage (see Ch 2, Sec 2, Tab 6). The operation of such device is to activate a visual and audible alarm. A time delay of 5-20 s is considered acceptable.

7.8.10 When an overload is detected the load shedding system is to disconnect automatically, after an appropriate time delay, the circuits supplying the non-essential services and, if necessary, the secondary essential services in a second stage.

7.8.11 Alternating current generators arranged to operate in parallel are to be provided with reverse-power protection.

The protection is to be selected in accordance with the characteristics of the prime mover.

The following values are recommended:

- 2-6% of the rated power for turbogenerators
- 8-15% of the rated power for diesel generators.

The reverse-power protection may be replaced by other devices ensuring adequate protection of the prime movers.

7.8.12 Generators are to be provided with an undervoltage protection which trips the breaker if the voltage falls to 70%-35% of the rated voltage.

The undervoltage release also prevents the closing of the circuit-breaker if the generator voltage does not reach a minimum of 85% of the rated voltage.

The operation of the undervoltage release is to be instantaneous when preventing closure of the breaker, but it is to be delayed for selectivity purposes when tripping the breaker.

7.8.13 Generators are to be provided with overvoltage protection to avoid damage to the connected equipment.

7.9 Protection of circuits

7.9.1 *Each separate circuit shall be protected against short-circuit and against overload, unless otherwise specified in these Rules or where the Society may exceptionally otherwise permit.*

7.9.2 Each circuit is to be protected by a multipole circuit-breaker or switch and fuses against overloads and short-circuits.

7.9.3 Circuits for lighting are to be disconnected on both non-earthed conductors. Single-pole disconnection of final sub-circuits with both poles insulated is permitted only in accommodation spaces, when a differential protection is provided.

7.9.4 The protective devices of the circuits supplying motors are to allow excess current to pass during transient starting of motors.

7.9.5 Final sub-circuits which supply one consumer with its own overload protection (for example motors), or consumers which cannot be overloaded (for example permanently wired heating circuits and lighting circuits), may be provided with short-circuit protection only.

7.9.6 Steering gear circuits are to be provided with short-circuit protection only (see Ch 1, Sec 14, [2]).

7.10 Protection of motors

7.10.1 Motors of rating exceeding 1 kW and all motors for essential services are to be protected individually against overload and short-circuit. The short-circuit protection may be provided by the same protective device for the motor and its supply cable (see [7.9.5]).

7.10.2 For motors intended for essential services, the overload protection may be replaced by an overload alarm (for steering gear motors see Ch 1, Sec 14, [2]).

7.10.3 The protective devices are to be designed so as to allow excess current to pass during the normal accelerating period of motors according to the conditions corresponding to normal use.

If the current/time characteristic of the overload protection device does not correspond to the starting conditions of a motor (e.g. for motors with extra-long starting period), provision may be made to suppress operation of the device during the acceleration period on condition that the short-circuit protection remains operational and the suppression of overload protection is only temporary.

7.10.4 For continuous duty motors the protective gear is to have a time delay characteristic which ensures reliable thermal protection against overload.

7.10.5 The protective devices are to be adjusted so as to limit the maximum continuous current to a value within the range 105% - 120% of the motor's rated full load current.

7.10.6 For intermittent duty motors the current setting and the delay (as a function of time) of the protective devices are to be chosen in relation to the actual service conditions of the motor.

7.10.7 Where fuses are used to protect polyphase motor circuits, means are to be provided to protect the motor against unacceptable overload in the case of single phasing.

7.10.8 Motors rated above 1 kW are to be provided with:

- undervoltage protection, operating on the reduction or failure of voltage, to cause and maintain the interruption of power in the circuit until the motor is deliberately restarted or
- undervoltage release, operating on the reduction or failure of voltage, so arranged that the motor restarts automatically when power is restored after a power failure.

7.10.9 The automatic restart of a motor is not to produce a starting current such as to cause excessive voltage drop.

In the case of several motors required to restart automatically, the total starting current is not to cause an excessive voltage drop or sudden surge current to this end, it may be necessary to achieve a sequence start.

7.10.10 The undervoltage protective devices are to allow the motor to be started when the voltage exceeds 85% of the rated voltage and are to intervene without fail when the voltage drops to less than approximately 20% of the rated voltage, at the rated frequency and with a time delay as necessary.

7.11 Protection of storage batteries

7.11.1 Batteries are to be protected against overload and short-circuit by means of fuses or multipole circuit-breakers at a position adjacent to the battery compartment.

Note 1: Overcurrent protection may be omitted for the circuit to the starter motors when the current drawn is so large that is impracticable to obtain short-circuit protection.

Note 2: When conductors from the batteries are not protected against short-circuiting and overload, they are to be installed so as to be adequately protected against short-circuits and earth faults and as short as possible, e.g., starting batteries for emergency generator or fire pumps engines in the same skid or very near.

7.11.2 Emergency batteries supplying essential services are to have short-circuit protection only.

7.12 Protection of shore power connection

7.12.1 Permanently fixed cables connecting the shore connection box to the main switchboard are to be protected by fuses or circuit-breakers (see [3.7.4]).

7.13 Protection of measuring instruments, pilot lamps and control circuits

7.13.1 Measuring circuits and devices (voltage transformers, voltmeters, voltage coils of measuring instruments, insulation monitoring devices etc.) and pilot lamps are to be protected against short-circuit by means of multipole circuit-breakers or fuses.

The protective devices are to be placed as near as possible to the tapping from the supply.

The secondary side of current transformers is not to be protected.

7.13.2 Control circuits and control transformers are to be protected against overload and short-circuit by means of multipole circuit-breakers or fuses on each pole not connected to earth.

Overload protection may be omitted for transformers with a rated current of less than 2 A on the secondary side.

The short-circuit protection on the secondary side may be omitted if the transformer is designed to sustain permanent short-circuit current.

7.13.3 Where a fault in a pilot lamp would impair the operation of essential services, such lamps are to be protected separately from other circuits such as control circuits.

Note 1: Pilot lamps connected via short-circuit-proof transformers may be protected in common with control circuits.

7.13.4 Circuits whose failure could endanger operation, such as steering gear control feeder circuits, are to be protected only against short-circuit.

7.13.5 The protection is to be adequate for the minimum cross-section of the protected circuits.

7.14 Protection of transformers

7.14.1 The primary winding side of power transformers is to be protected against short-circuit and overload by means of multipole circuit-breakers or switches and fuses.

Overload protection on the primary side may be dispensed with where it is provided on the secondary side or when the total possible load cannot reach the rated power of the transformer.

7.14.2 The protection against short-circuit is to be such as to ensure the selectivity between the circuits supplied by the secondary side of the transformer and the feeder circuit of the transformer.

7.14.3 When transformers are arranged to operate in parallel, means are to be provided so as to trip the switch on the secondary winding side when the corresponding switch on the primary side is open.

7.15 Lightning protection

7.15.1 For ships fitted with non-metallic masts or non metallic superstructures, a lightning conductor is to be provided. The lower end of the lightning conductor is to be earthed to the hull.

8 System components

8.1 General

8.1.1 The components of the electrical system are to be dimensioned such as to withstand the currents that can pass through them during normal service without their rating being exceeded.

8.1.2 The components of the electrical system are to be designed and constructed so as to withstand for the admissible duration the thermal and electrodynamic stresses caused by possible overcurrents, including short-circuit.

9 Electrical cables

9.1 General

9.1.1 *All electrical cables and wiring external to equipment shall be at least of a flame-retardant type,* in accordance with Ch 2, Sec 9, [2.1.6].

9.1.2 When cables are laid in bunches, cable types are to be chosen in compliance with Ch 2, Sec 9, [2.1.7].

9.1.3 Cables which are required to have fire-resisting characteristics are to comply with the requirements stipulated in Ch 2, Sec 9, [2.1.9].

9.1.4 Cables and insulated wiring are generally to be chosen and installed in accordance with IEC Publications 60092-352, as well with the provisions of this Chapter.

9.2 Choice of insulation

9.2.1 The maximum rated operating temperature of the insulating material is to be at least 10°C higher than the maximum ambient temperature liable to occur or to be produced in the space where the cable is installed.

9.2.2 The maximum rated conductor temperature for normal and short-circuit operation, for the type of insulating compounds normally used for shipboard cables, is not to exceed the values stated in Tab 4. Special consideration will be given to other insulating materials.

9.2.3 PVC-ST2 insulated cables are not to be used either in refrigerated spaces, or on decks exposed to the weather of ships classed for unrestricted service.

9.2.4 Mineral insulated cables will be considered on a case by case basis.

Table 4 : Maximum rated conductor temperature

Type of insulating compound	Abbreviated designation	Maximum rated conductor temperature, in °C	
		Normal operation	Short-circuit
a) Thermoplastic:			
- based upon polyvinyl chloride or copolymer of vinyl chloride and vinyl acetate	PVC	70	150
b) Elastomeric or thermoset:			
- based upon ethylene-propylene rubber or similar (EPM or EPDM)	EPR	90	250
- based upon high modulus or hard grade ethylene propylene rubber	HEPR	90	250
- based upon cross-linked polyethylene	XLPE	90	250
- based upon silicone rubber	S 95	95	350 **(1)**
- based upon ethylene-propylene rubber or similar (EPM or EPDM) halogen-free	HF EPR	90	250
- based upon high modulus or hard grade halogen-free ethylene propylene rubber	HF HEPR	90	250
- based upon halogen-free cross-linked polyethylene	HF XLPE	90	250
- based upon halogen-free silicone rubber	HF S 95	95	350 **(1)**
- based upon cross-linked polyolefin material for halogen-free cables	HF 90	90	250
(1) This temperature is applicable only to power cables and not appropriate for tinned copper conductors.			

9.3 Choice of protective covering

9.3.1 The conductor insulating materials are to be enclosed in an impervious sheath of material appropriate to the expected ambient conditions where cables are installed in the following locations:

- on decks exposed to the weather
- in damp or wet spaces (e.g. in bathrooms)
- in refrigerated spaces
- in machinery spaces and, in general
- where condensation water or harmful vapour may be present.

9.3.2 Where cables are provided with armour or metallic braid (e.g. for cables installed in hazardous areas), an overall impervious sheath or other means to protect the metallic elements against corrosion is to be provided (see Ch 2, Sec 9, [2.5]).

9.3.3 An impervious sheath is not required for single-core cables installed in tubes or ducts inside accommodation spaces, in circuits with maximum system voltage 250 V.

9.3.4 In choosing different types of protective coverings, due consideration is to be given to the mechanical action to which each cable may be subjected during installation and in service.

If the mechanical strength of the protective covering is considered insufficient, the cables are to be mechanically protected (e.g. by an armour or by installation inside pipes or conduits).

9.3.5 Single-core cables for a.c. circuits with rated current exceeding 20 A are to be either non-armoured or armoured with non-magnetic material.

9.4 Cables in refrigerated spaces

9.4.1 Cables installed in refrigerated spaces are to have a watertight or impervious sheath and are to be protected against mechanical damage. If an armour is applied on the sheath, the armour is to be protected against corrosion by a further moisture-resisting covering.

9.5 Cables in areas with a risk of explosion

9.5.1 For cables in areas with a risk of explosion, see [10.5].

9.6 Cables in circuits required to be operable under fire condition

9.6.1 Electrical services required to be operable under fire conditions are as follows:

- control and power systems to power-operated fire doors and status indication for all fire doors
- control and power systems to power-operated watertight doors and their status indication
- emergency fire pump
- emergency lighting
- fire and general alarms
- fire detection systems
- fire-extinguishing systems and fire-extinguishing media release alarms
- low location lighting
- public address systems
- remote emergency stop/shutdown arrangements for systems which may support the propagation of fire and/or explosion.

9.6.2 Where cables for services specified in [9.6.1] including their power supplies pass through high fire risk areas, and, in addition for passenger ships, through main vertical fire zones other than those which they serve, they are to be so arranged that a fire in any of these areas or zones does not affect the operation of the service in any other area or zone. This may be achieved by either of the following measures:

a) Cables being of a fire resistant type complying with Ch 2, Sec 9, [2.1.9] are installed and run continuous to keep the fire integrity within the high fire risk area (see Fig 4)

Note 1: The application of this requirement for public spaces containing furniture and furnishings of other than restricted fire risk and having a deck area of 50 m² or more will be considered on the case by case basis.

b) At least two-loops/radial distributions run as widely apart as is practicable and so arranged that in the event of damage by fire at least one of the loops/radial distributions remains operational.

Systems that are self monitoring, fail safe or duplicated with cable runs as widely separated as is practicable may be exempted.

9.6.3 *Cables connecting fire pumps to the emergency switchboard shall be of a fire-resistant type where they pass through high fire risk areas.*

Figure 4 : Routing of cables in high fire risk area

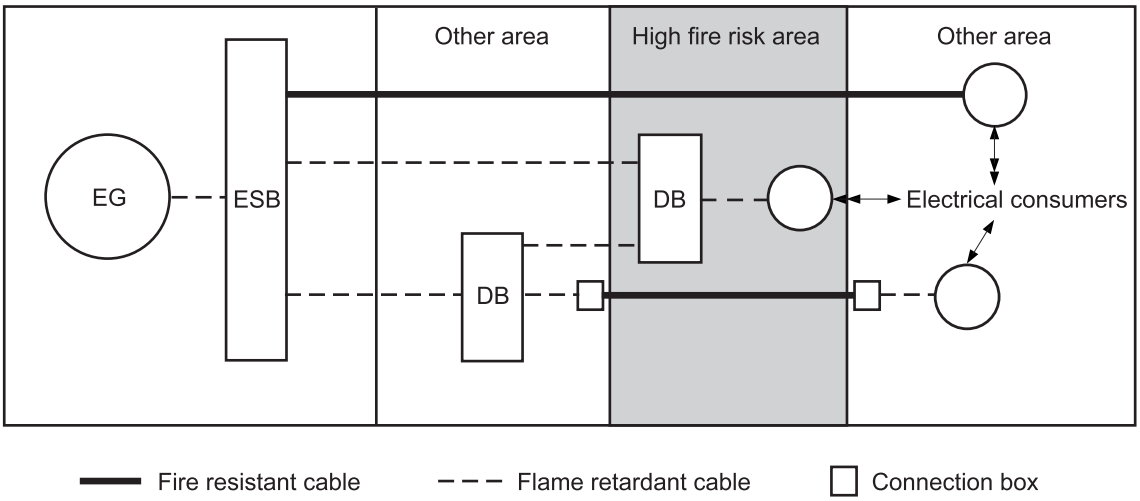

9.7 Cables for submerged bilge pumps

9.7.1 Cables and their connections to such pumps are to be capable of operating under a head of water equal to their distance below the bulkhead deck. The cable is to be impervious-sheathed and armoured, is to be installed in continuous lengths from above the bulkhead to the motor terminals and is to enter the air bell from the bottom.

9.8 Internal wiring of switchboards and other enclosures for equipment

9.8.1 For installation in switchboards and other enclosures for equipment, single-core cables may be used without further protection (sheath).

Other types of flame-retardant switchboard wiring may be accepted at the discretion of the Society.

9.9 Current carrying capacity of cables

9.9.1 The current carrying capacity for continuous service of cables given in Tab 5 to Tab 9 is based on the maximum permissible service temperature of the conductor also indicated therein and on an ambient temperature of 45°C.

9.9.2 The current carrying capacity cited in [9.9.1] is applicable, with rough approximation, to all types of protective covering (e.g. both armoured and non-armoured cables).

9.9.3 Values other than those shown in Tab 5 to Tab 9 may be accepted provided they are determined on the basis of calculation methods or experimental values approved by the Society.

9.9.4 When the actual ambient temperature obviously differs from 45°C, the correction factors shown in Tab 10 may be applied to the current carrying capacity in Tab 5 to Tab 9.

9.9.5 Where more than six cables are bunched together in such a way that there is an absence of free air circulating around them, and the cables can be expected to be under full load simultaneously, a correction factor of 0,85 is to be applied.

9.9.6 Where a cable is intended to supply a short-time load for 1/2-hour or 1-hour service (e.g. mooring winches or bow thruster propellers), the current carrying capacity obtained from Tab 5 to Tab 9 may be increased by applying the corresponding correction factors given in Tab 11.

In no case is a period shorter than 1/2-hour to be used, whatever the effective period of operation.

9.9.7 For supply cables to single services for intermittent loads (e.g. cargo winches or machinery space cranes), the current carrying capacity obtained from Tab 5 to Tab 9 may be increased by applying the correction factors given in Tab 12.

The correction factors are calculated with rough approximation for periods of 10 minutes, of which 4 minutes with a constant load and 6 minutes without load.

9.9.8 The current carrying capacity of cables connected in parallel is the sum of the current ratings of all parallel conductors but the cables must have equal impedance, equal cross-section, equal maximum permissible conductor temperatures and follow substantially identical routing or be installed in close proximity. Connections in parallel are only permitted for cross-sections of 10 mm^2 or above. When equal impedance can not be assumed, a correction factor of 0,9 is to be applied to the current carrying capacity.

Table 5 : Current carrying capacity, in A, in continuous service for cables based on maximum conductor operating temperature of 60°C (ambient temperature 45°C)

Nominal section, in mm^2	Number of conductors		
	1	2	3 or 4
1,5	10	9	7
2,5	17	14	12
4	23	20	16
6	29	25	20
10	40	34	28
16	54	46	38
25	71	60	50
35	88	75	62
50	110	94	77
70	135	115	95
95	164	139	115
120	189	161	132
150	218	185	153
185	248	211	174
240	292	248	204
300	336	286	235
400	dc: 390 ac: 380	dc: 332 ac: 323	dc: 273 ac: 266
500	dc: 450 ac: 430	dc: 383 ac: 366	dc: 315 ac: 301
630	dc: 520 ac: 470	dc: 442 ac: 400	dc: 364 ac: 329

Table 6 : Current carrying capacity, in A, in continuous service for cables based on maximum conductor operating temperature of 85°C (ambient temperature 45°C)

Nominal section, in mm²	Number of conductors		
	1	2	3 or 4
1,5	21	18	15
2,5	28	24	20
4	38	32	27
6	49	42	34
10	67	57	47
16	91	77	64
25	120	102	84
35	148	126	104
50	184	156	129
70	228	194	160
95	276	235	193
120	319	271	223
150	367	312	257
185	418	355	293
240	492	418	344
300	565	480	396
400	dc: 650 ac: 630	dc: 553 ac: 536	dc: 455 ac: 441
500	dc: 740 ac: 680	dc: 629 ac: 578	dc: 518 ac: 476
630	dc: 840 ac: 740	dc: 714 ac: 629	dc: 588 ac: 518

Table 7 : Current carrying capacity, in A, in continuous service for cables based on maximum conductor operating temperature of 70°C (ambient temperature 45°C)

Nominal section, in mm²	Number of conductors		
	1	2	3 or 4
1,5	15	13	11
2,5	21	18	15
4	29	25	20
6	37	31	26
10	51	43	36
16	68	58	48
25	90	77	63
35	111	94	78
50	138	117	97
70	171	145	120
95	207	176	145
120	239	203	167
150	275	234	193
185	313	266	219
240	369	314	258
300	424	360	297
400	dc: 500 ac: 490	dc: 425 ac: 417	dc: 350 ac: 343
500	dc: 580 ac: 550	dc: 493 ac: 468	dc: 406 ac: 385
630	dc: 670 ac: 610	dc: 570 ac: 519	dc: 469 ac: 427

Table 8 : Current carrying capacity, in A, in continuous service for cables based on maximum conductor operating temperature of 90°C (ambient temperature 45°C)

Nominal section (mm²)	Number of conductors		
	1	2	3 or 4
1,5	23	20	16
2,5	30	26	21
4	40	34	28
6	52	44	36
10	72	61	50
16	96	82	67
25	127	108	89
35	157	133	110
50	196	167	137
70	242	206	169
95	293	249	205
120	339	288	237
150	389	331	272
185	444	377	311
240	522	444	365
300	601	511	421
400	dc: 690 ac: 670	dc: 587 ac: 570	dc: 483 ac: 469
500	dc: 780 ac: 720	dc: 663 ac: 612	dc: 546 ac: 504
630	dc: 890 ac: 780	dc: 757 ac: 663	dc: 623 ac: 546

Table 9 : Current carrying capacity, in A, in continuous service for cables based on maximum conductor operating temperature of 95°C (ambient temperature 45°C)

Nominal section (mm²)	Number of conductors		
	1	2	3 or 4
1,5	26	22	18
2,5	32	27	22
4	43	37	30
6	55	47	39
10	76	65	53
16	102	87	71
25	135	115	95
35	166	141	116
50	208	177	146
70	256	218	179
95	310	264	217
120	359	305	251
150	412	350	288
185	470	400	329
240	553	470	387
300	636	541	445
400	dc: 760 ac: 725	dc: 646 ac: 616	dc: 532 ac: 508
500	dc: 875 ac: 810	dc: 744 ac: 689	dc: 612 ac: 567
630	dc: 1010 ac: 900	dc: 859 ac: 765	dc: 707 ac: 630

Table 10 : Correction factors for various ambient air temperatures

Maximum conductor temperature, in °C	Correction factors for ambient air temperature of:										
	35°C	40°C	45°C	50°C	55°C	60°C	65°C	70°C	75°C	80°C	85°C
60	1,29	1,15	1,00	0,82	–	–	–	–	–	–	–
65	1,22	1,12	1,00	0,87	0,71	–	–	–	–	–	–
70	1,18	1,10	1,00	0,89	0,77	0,63	–	–	–	–	–
75	1,15	1,08	1,00	0,91	0,82	0,71	0,58	–	–	–	–
80	1,13	1,07	1,00	0,93	0,85	0,76	0,65	0,53	–	–	–
85	1,12	1,06	1,00	0,94	0,87	0,79	0,71	0,61	0,50	–	–
90	1,10	1,05	1,00	0,94	0,88	0,82	0,74	0,67	0,58	0,47	–
95	1,10	1,05	1,00	0,95	0,89	0,84	0,77	0,71	0,63	0,55	0,45

Table 11 : Correction factors for short-time loads

1/2-hour service		1-hour service		Correction factor
Sum of nominal cross-sectional areas of all conductors, in mm²		Sum of nominal cross-sectional areas of all conductors, in mm²		
Cables with metallic sheath and armoured cables	Cables with non-metallic sheath and non-armoured cables	Cables with metallic sheath and armoured cables	Cables with non-metallic sheath and non-armoured cables	
up to 20	up to 75	up to 80	up to 230	1,06
21 - 41	76 - 125	81 - 170	231 - 400	1,10
41 - 65	126 - 180	171 - 250	401 - 600	1,15
66 - 95	181 - 250	251 - 430	601 - 800	1,20
96 - 135	251 - 320	431 - 600	–	1,25
136 - 180	321 - 400	601 - 800	–	1,30
181 - 235	401 - 500	–	–	1,35
236 - 285	501 - 600	–	–	1,40
286 - 350	–	–	–	1,45

Table 12 : Correction factors for intermittent service

Sum of nominal cross-sectional areas of all conductors, in mm²		Correction factor
Cables with metallic sheath and armoured cables	Cables without metallic sheath and non-armoured cables	
	$S \leq 5$	1,10
	$5 < S \leq 8$	1,15
	$8 < S \leq 16$	1,20
$S \leq 4$	$16 < S \leq 25$	1,25
$4 < S \leq 7$	$25 < S \leq 42$	1,30
$7 < S \leq 17$	$42 < S \leq 72$	1,35
$17 < S \leq 42$	$72 < S \leq 140$	1,40
$42 < S \leq 110$	$140 < S$	1,45
$110 < S$	–	1,50

9.10 Minimum nominal cross-sectional area of conductors

9.10.1 In general the minimum allowable conductor cross-sectional areas are those given in Tab 13.

9.10.2 The nominal cross-sectional area of the neutral conductor in three-phase distribution systems is to be equal to at least 50% of the cross-sectional area of the phases, unless the latter is less than or equal to 16 mm^2. In such case the cross-sectional area of the neutral conductor is to be equal to that of the phase.

9.10.3 For the nominal cross-sectional area of:

- earthing conductors, see Ch 2, Sec 12, [2.3]
- earthing connections for distribution systems, see Ch 2, Sec 12, [2.5]
- neutral connections for three-phase systems, see Ch 2, Sec 8, [1.3.4].

Table 13 : Minimum nominal cross-sectional areas

Service	Nominal cross-sectional area, in mm^2	
	External wiring	Internal wiring
Power, heating and lighting systems	1,0	1,0
Control circuits for power plant	1,0	1,0
Control circuits other than those for power plant	0,75	0,5
Control circuits for telecommunications, measurement, alarms	0,5	0,2
Telephone and bell equipment, not required for the safety of the ship or crew calls	0,2	0,1
Bus and data cables	0,2	0,1

9.11 Choice of cables

9.11.1 The rated voltage of any cable is to be not lower than the nominal voltage of the circuit for which it is used.

9.11.2 The nominal cross-sectional area of each cable is to be sufficient to satisfy the following conditions with reference to the maximum anticipated ambient temperature:

- the current carrying capacity is to be not less than the highest continuous load carried by the cable
- the voltage drop in the circuit, by full load on this circuit, is not to exceed the specified limits
- the cross-sectional area calculated on the basis of the above is to be such that the temperature increases which may be caused by overcurrents or starting transients do not damage the insulation.

9.11.3 The highest continuous load carried by a cable is to be calculated on the basis of the power requirements and of the diversity factor of the loads and machines supplied through that cable.

9.11.4 When the conductors are carrying the maximum nominal service current, the voltage drop from the main or emergency switchboard busbars to any point in the installation is not to exceed 6% of the nominal voltage.

For battery circuits with supply voltage less than 55 V, this value may be increased to 10%.

For the circuits of navigation lights, the voltage drop is not to exceed 5% of the rated voltage under normal conditions.

10 Electrical installations in hazardous areas

10.1 General

10.1.1 Hazardous area classification

For the classification of hazardous areas for explosive gas/dust atmospheres, see Ch 2, Sec 1, [3.13].

10.2 Electrical equipment

10.2.1 No electrical equipment is to be installed in hazardous areas unless the Society is satisfied that such equipment is:

- essential for operational purposes
- certified safe as per the types presented in Tab 14, in accordance with IEC 60079 series

Table 14 : The main types of electrical protection

Protection method	Symbol	Zones gas (dust)	EPL	IEC Standard
Intrinsically safe	Ex ia	0,1,2 (20,21,22)	Ga / Da	IEC 60079-11: 2011
	Ex ib	1,2 (21,22)	Gb / Db	
	Ex ic	2 (22)	Gc / Dc	
Increased safety	Ex eb	1,2 (21,22)	Gb	IEC 60079-7:2017
	Ex ec	2 (22)	Gc	
Flameproof enclosure	Ex da	0,1,2	Ga	IEC 60079-1:2014
	Ex db	1,2	Gb	
	Ex dc	2	Gc	
Powder filled	Ex q	1,2	Gb	IEC 60079-5:2015
Non sparking	Ex nA	2	Gc	IEC 60079-15: 2017
Protected sparking	Ex nC	2	Gc	
Restricted breathing	Ex nR	2	Gc	
Pressurization	Ex pxb	1,2	Gb	IEC60079-2: 2014
	Ex pyb	1,2 (21,22)	Gb / Db	
	Ex pzb	2 (22)	Gc / Dc	
Pressurized room	Ex pb	1,2		IEC60079-13:2017
	Ex pc	2		
Artificially ventilated	Ex vc	2		
Encapsulation	Ex ma	0,1,2 (20,21,22)	Ga	IEC 60079-18: 2017
	Ex mb	1,2 (21,22)	Gb	
	Ex mc	2 (22)	Gc	
Liquid immersion	Ex ob	1,2	Gb	IEC 60079-6: 2015
	Ex oc	2	Gc	
Optical radiation	Ex op pr	1,2 (21,22)	Gb (Zone 1) Gc (Zone 2)	IEC 60079-28: 2015
	Ex op is	0,1,2 (20,21,22)	Ga (Zone 0) Gb (Zone 1) Gc (Zone 2)	
	Ex op sh	0,1,2 (20,21,22)	Gb (Zone 1) Gc (Zone 2)	
Protection by enclosure	Ex ta	20,21,22	Da	IEC 60079-31: 2022
	Ex tb	21,22	Db	
	Ex tc	22	Dc	
Special protection	sa		Ga / Da	IEC 60079-33: 2015
	sb		Gb / Db	
	sc		Gc / Dc	

10.2.2 Certified safe electrical equipment is to be selected with due consideration to the following:

a) risk of explosive dust concentration (see Ch 2, Sec 2, [6.2]):
   - degree of protection of the enclosure
   - maximum surface temperature

b) risk of explosive gas atmosphere (see Ch 2, Sec 2, [6.1]):
   - explosion group, according to Tab 15
   - temperature class, according to Tab 16.

c) equipment protection level (EPL) according to Tab 17.

10.2.3 All switches and protective devices are to interrupt all poles or phases and, where practicable, to be located in a non-hazardous area unless specifically permitted otherwise.

Such switches and equipment located in hazardous areas are to be suitably labelled for identification purposes.

10.2.4 Electrical installations in hazardous areas are to be inspected by skilled personnel at their initial installation.

This verification is to be in accordance with IEC 60079-17:2023, IEC 60079-14:2016 or other recognized standard accepted by the Society.

Table 15 : Gas / Dust group

Explosive Atmosphere	Typical combustible material	Group	Temperature class
Gas or vapour	Methane	IIA	T1
	Octane	IIA	T3
	LPG (propane, butane)	IIA	T2
	Hydrogen	IIC / IIB+H2	T1
	Methanol (Methyl alcohol)	IIA	T2
	Ethanol / Ethylene	IIB	T2
	Ammonia	IIA	T1
	Acetylene	IIC	T2
Dust	Metal	IIIC	_
	Coal	IIIB	_
	Grain	IIIB	_
	Paper or wood	IIIA	_

Table 16 : Relationship between gas or vapour ignition temperature and temperature class of equipment

Temperature class required by the area classification	Ignition temperature of gas or vapour in °C	Allowable temperature classes of equipment
T1	> 450	T1 – T6
T2	> 300	T2 – T6
T3	> 200	T3 – T6
T4	> 135	T4 – T6
T5	> 100	T5 – T6
T6	> 85	T6

Table 17 : Equipment protection level (EPL)

Zone	EPL	Protection Level
0	Ga	Very high
1	Ga or Gb	High
2	Ga, Gb or Gc	Increased
20	Da	Very high
21	Da or Db	High
22	Da, Db or Dc	Increase

10.2.5 For electrical equipment installed in Zone 0 hazardous areas, only the following types are permitted:

- apparatus designed for zone 0 as per Tab 14
- certified intrinsically-safe apparatus Ex(ia) and their associated cables
- simple electrical apparatus and components (e.g. thermocouples, photocells, strain gauges, junction boxes, switching devices), included in intrinsically-safe circuits of category "ia" not capable of storing or generating electrical power or energy in excess of limits stated in the relevant rules, and accepted by the appropriate authority.

10.2.6 For electrical equipment installed in Zone 1 hazardous areas, only the following types are permitted:

- any apparatus that may be considered for Zone 0 as per [10.2.5]
- apparatus designed for Zone 1 as per Tab 14
- category 'Ex ib' intrinsically safe type electrical equipment and their associated cables
- simple electrical apparatus and components (e.g. thermocouples, photocells, strain gauges, junction boxes, switching devices), included in intrinsically-safe circuits of category "ib" not capable of storing or generating electrical power or energy in excess of limits stated in the relevant rules, and accepted by the appropriate authority.

10.2.7 For electrical equipment installed in Zone 2 hazardous areas, only the following types are permitted:

- any apparatus type that may be considered for Zone 1as per [10.2.6]
- apparatus designed for Zone 2 as per Tab 14.

10.2.8 When apparatus incorporates a number of types of protection, it is to be ensured that all are suitable for use in the zone in which it is located.

10.2.9 Ventilation

The electrical supply for ventilation systems in hazardous areas must be separate from that of non-hazardous areas.

10.3 Certified safe type documentation

10.3.1 Safe type certificates or equivalent documentation issued by an accredited or recognized certification body and established on a basis at least equivalent to the IEC 60079 series publication are to be submitted for each electrical equipment located in hazardous areas.

10.3.2 For intrinsically safe circuits, a document describing the system is to be submitted to the Society, specifying the items of electrical equipment and the electrical parameters of the system, including those of inter-connecting wiring. This document is not required in case a certificate defining the parameters for the complete intrinsically safe system is available.

The requirements of IEC 60079-14:2016 apply.

10.4 Marking

10.4.1 The Ex equipment is to be clearly marked on a main part of the equipment, in accordance with IEC 60079-0:2018, ensuring the marking is easily visible. List of the information to be presented on the marking plate:

- the name of the manufacturer or his registered trade mark
- the product code or model number
- An Ex certificate indicates that the Ex Equipment corresponds to one or more of the types of protection specified in the relevant standards. The certificate must contain the following information:
  - certificate number
  - equipment group
  - temperature class
  - equipment protection level (EPL)
  - explosive atmosphere (gas, vapour or dust)
  - type of protection.

10.5 Electrical cables

10.5.1 Electrical cables are not to be installed in hazardous areas except as specifically permitted or when associated with intrinsically safe circuits.

10.5.2 All cables installed in Zone 0 or in Zone 1 are to be sheathed with at least one of the following:

a) a non-metallic impervious sheath in combination with braiding or other metallic covering

b) a copper or stainless steel sheath (for mineral insulated cables only).

10.5.3 All cables installed in non-weather exposed Zone 2 areas are to be provided with at least a non-metallic external impervious sheath.

10.5.4 Cables of intrinsically safe circuits are to have a metallic shielding with at least a non-metallic external impervious sheath.

10.5.5 The circuits of a category “ib” intrinsically safe system are not to be contained in a cable associated with a category “ia” intrinsically safe system required for a hazardous area in which only category “ia” systems are permitted.

10.5.6 All metallic covering of power and lighting cables run though hazardous areas or connected to equipment Installed in these areas, are to be at least earthed at their ends.

10.5.7 Intrinsically safe circuit cables should be clearly marked as a part of an intrinsically safe circuit, if the sheaths or coverings are color-coded, the color for cables containing intrinsically safe circuits must be light blue.

Except if either all intrinsically safe cables or all non-intrinsically safe cables are equipped with armor, metal sheathing, or screening, then labeling the intrinsically safe cables is not necessary.

10.5.8 Penetration of bulkheads or decks separating areas with a risk of explosion are to comply with Ch 2, Sec 12, [7.5.4].

10.6 Electrical installations in battery rooms

10.6.1 Only lighting fittings may be installed in compartments assigned solely to large vented storage batteries (see Ch 2, Sec 11, [6.2.1]).

The associated switches are to be installed outside such spaces.

Overcurrent protective devices are to be installed as close as possible to, but outside of, battery rooms.

Electrical cables other than those pertaining to the equipment arranged in battery rooms are not permitted.

10.6.2 Standard marine electrical equipment may be installed in compartments assigned solely to valve-regulated sealed storage batteries.

10.6.3 Hazardous area classification

a) Hazardous area Zone 1

Hazardous area Zone 1 includes but is not limited to:

Battery compartments containing vented batteries. For NiCD and lead acid batteries, electrical equipment are to be minimum explosion group IIC and temperature class T1.

b) Hazardous area zone 2

Hazardous area Zone 2 includes but is not limited to:

Ducts and areas on open deck within 1,5 m of inlet or exhaust openings of battery rooms containing vented or Li-Ion batteries.

For battery compartment containing Li-ion batteries, equipment installed at locations 450 mm or closer to the ceilings is to be suitable for Zone 2, with a minimum explosion group of IIB+H2 and a temperature class of T2.

10.6.4 Equipment (including fan motors) are to be suitable for the use in the corresponding hazardous area.

10.6.5 Additionally, when hazardous areas may be created regarding criteria of IEC 60079-10-1:2021 , the battery compartment and its neighborhood is to be considered accordingly.

10.7 Electrical installations in paint stores or enclosed spaces leading to paint stores

10.7.1 Hazardous area classification

a) The paint stores and supply and exhaust ventilation ducts serving such spaces are to be classified as Zone 1, as defined in Ch 2, Sec 1, [3.13].

b) Areas on open deck within 1 m of inlet and exhaust ventilation openings of paint stores or within 3 m of exhaust mechanical ventilation outlets of such spaces are to be classified as Zone 2, as defined in Ch 2, Sec 1, [3.13].

c) Enclosed spaces giving access to paint stores may be considered as non-hazardous, provided that:
   - the door to the paint store is a gastight door with self-closing devices without holding back arrangements. A watertight door may be considered as being gastight
   - the paint store is provided with an acceptable, independent, natural ventilation system ventilated from a safe area, and
   - warning notices are fitted adjacent to the paint store entrance stating that the store contains flammable liquids

10.7.2 Type of equipment

In hazardous area zone 1, electrical equipment is to be only when it is essential for operational services. The following electrical equipment may be installed:

- certified intrinsically safe apparatus Ex(ib)
- certified flameproof Ex(db)
- certified pressurised Ex(pb)
- certified increased safety Ex(eb)
- certified specially Ex(s).

Cables (through runs or termination cables) of armoured type or installed in metallic conduits are to be used.

10.7.3 In hazardous area Zone 2, the following electrical equipment may be installed:

- electrical equipment with the type of protection as permitted in paint stores
- equipment of protection class Ex(n)
- appliances which do not generate arcs in service and whose surface does not reach unacceptably high temperature
- appliances with simplified pressurised enclosures or vapour-proof enclosures (minimum class of protection IP55) whose surface does not reach unacceptably high temperature; or
- cables as specified in [10.6] and [10.8.2].

10.7.4 Minimum requirements

The minimum requirements for the certified safe type equipment are as follows:

- explosion group II B
- temperature class T3.

10.7.5 Switches, protective devices and motor control gear of electrical equipment installed in a paint store are to interrupt all poles or phases and are preferably to be located in a non hazardous space.

10.8 Electrical installations in stores for welding gas (acetylene) bottles

10.8.1 The following equipment may be installed in stores for welding gas bottles provided that it is of a safe type appropriate for Zone 1 area installation:

- lighting fittings
- ventilator motors where provided.

10.8.2 Electrical cables other than those pertaining to the equipment arranged in stores for welding gas bottles are not permitted.

10.8.3 Electrical equipment for use in stores for welding gas bottles is to have minimum explosion group IIC and temperature class T2.

10.9 Specific ships or installations

10.9.1 For installations in hazardous areas in:

- oil tankers, chemical tankers and liquefied gas carriers, see Pt D, Ch 7, Sec 5, Pt D, Ch 8, Sec 10 or Pt D, Ch 9, Sec 10
- ships arranged with spaces for the carriage of vehicles, see Pt D, Ch 1, Sec 4 or Pt D, Ch 12, Sec 4
- ships arranged with fuel storage and refuelling facilities for auxiliary vehicles, see Ch 4, Sec 11, [4]
- ships intended for the carriage of dangerous goods, see Ch 4, Sec 12, [2.3]
- ships arranged with tanks used for the storage and use of chemical treatment fluids for exhaust gas pollution prevention system, see Ch 1, Sec 11, [5.2.2]
- ships arranged with ballast water management systems, see Ch 1, Sec 13, [2.6].

Section 4 Rotating Machines

1 Constructional requirements for generators and motors

1.1 Mechanical construction

1.1.1 Materials and construction of electrical machines are to conform to the relevant requirements of Ch 2, Sec 2, [4] and Ch 2, Sec 2, [5].

1.1.2 Shafts are to be made of material complying with the provisions of NR216 Materials and Welding, Chapter 5 or, where rolled products are allowed in place of forgings, with those of NR216 Materials and Welding, Chapter 3.

1.1.3 Where welded parts are foreseen on shafts and rotors, the provisions of NR216 Materials and Welding, Chapter 12 are to apply.

1.1.4 Sleeve bearings are to be efficiently and automatically lubricated at all running speeds.

Provision is to be made for preventing the lubricant from gaining access to windings or other insulated or bare current carrying parts.

1.1.5 Means are to be provided to prevent bearings from being damaged by the flow of currents circulating between them and the shaft. According to the manufacturer's requirements, electrical insulation of at least one bearing is to be considered.

1.1.6 For surface-cooled machines with an external fan installed on the open deck, adequate protection of the fan against icing is to be provided.

1.1.7 When liquid cooling is used, the coolers are to be so arranged as to avoid entry of water into the machine, whether by leakage or condensation in the heat exchanger, and provision is to be made for the detection of leakage.

1.1.8 Rotating machines whose ventilation or lubrication system efficiency depends on the direction of rotation are to be provided with a warning plate.

1.2 Sliprings, commutators and brushes

1.2.1 Sliprings and commutators with their brushgear are to be so constructed that undue arcing is avoided under all normal load conditions.

1.2.2 The working position of brushgear is to be clearly and permanently marked.

1.2.3 Sliprings, commutators and brushgear are to be readily accessible for inspection, repairs and maintenance.

1.3 Terminal connectors

1.3.1 Suitable, fixed terminal connectors are to be provided in an accessible position for connection of the external cables.

1.3.2 All terminal connectors are to be clearly identified with reference to a diagram.

1.3.3 The degree of protection of terminal boxes is to be adequate to that of the machine.

1.4 Electrical insulation

1.4.1 Insulating materials for windings and other current carrying parts are to comply with the requirements of Ch 2, Sec 2, [4.2] and Ch 2, Sec 2, [4.3].

2 Special requirements for generators

2.1 Prime movers, speed governors and overspeed protection

2.1.1 Prime movers for generators are to comply with the relevant requirements of Ch 1, Sec 2, [2.7].

2.1.2 When generators are to operate in parallel, the characteristics of speed governors are to comply with the provisions of [2.2].

2.2 A.c. generators

2.2.1 Alternators are to be so constructed that, when started up, they take up the voltage without the aid of an external electrical power source.

Where these provisions are not complied with, the external electrical power source is to be constituted by a battery installation in accordance with the requirements for electrical starting systems of auxiliary machinery (see Ch 1, Sec 2).

2.2.2 The voltage wave form is to be approximately sinusoidal, with a maximum deviation from the sinusoidal fundamental curve of 5% of the peak value.

2.2.3 Each alternator is to be provided with automatic means of voltage regulation.

2.2.4 For a.c. generating sets operating in parallel, the governing characteristics regarding the load are to comply with requirement of Ch 1, Sec 2, [2.7.6].

2.2.5 When a.c. generators are operated in parallel, the reactive loads of the individual generating sets are not to differ from their proportionate share of the total reactive load by more than 10% of the rated reactive power of the largest machine, or 25% of that of the smallest machine, whichever is the lesser.

2.3 Approval of generating sets

2.3.1 A generating set is considered as a whole system including:

- a prime mover engine and its auxiliaries (for fuel oil, turbo compressor, lubricating oil, cooling circuits...)
- an alternator, and its auxiliaries, if any (lubricating and cooling system...)
- engine control system, speed governor and associated sensors
- an automatic voltage regulator
- a coupling system
- cabling

2.3.2 Components are to be type approved. Case by case approvals may be admitted at the discretion of the Society.

2.3.3 Documentation for system assembly is to be provided:

- List of components
- General electrical diagram
- Coupling system
- Torsional Vibration Calculation, when required in Ch 1, Sec 9, [1.1]

2.3.4 The rated power of the generating set is to be appropriate for its actual use. See also Ch 1, Sec 2, [1.3.2].

2.3.5 The entity responsible of assembling the generating set is to install a rating plate marked with at least the following information:

a) the generating set manufacturer's name or mark

b) the set serial number

c) the set date of manufacture (month/year)

d) the rated power (both in kW and KVA) with one of the prefixes COP, PRP (or, only for emergency generating sets, LTP) as defined in ISO 8528-1:2018

e) the rated power factor

f) the set rated frequency, in Hz

g) the set rated voltage, in V

h) the set rated current, in A

i) the mass, in kg.

3 Testing of rotating machines

3.1 General

3.1.1 All machines are to be tested by the manufacturers.

3.1.2 All tests are to be carried out according to IEC 60092-301.

3.1.3 The manufacturer is to issue a test report giving, inter alia, information concerning the construction, type, serial number, insulation class and all other technical data relevant to the machine, as well as the results of the tests required.

3.1.4 All electric motors rated at or above 100 kW and alternators rated at or above 100 kVA intended for essential services are to be type approved or case-by-case approved and surveyed by the Society during testing and, if appropriate, during manufacturing. Tested machines are to be individually certified by the Society.

In addition for rotating machines intended for propulsion developing a power of more than 1 MW, requirements given in [5] apply.

Note 1: An alternative inspection scheme may be agreed by the Society with the manufacturer whereby the attendance of the Surveyor will not be required as indicated above.

3.1.5 All electric motors rated below 100 kW and alternators rated below 100 kVA intended for essential services are to be type approved or case-by-case approved. Individual works' certificate is to be issued by the manufacturer and detailed test report submitted to the Society.

3.1.6 For rotating machines intended for non essential services, individual works' certificate is to be issued by the manufacturer and detailed test report made available and submitted upon request.

3.1.7 Case-by-case approval, mentioned in [3.1.4] and [3.1.5], is to be in line with requirement given in Ch 2, Sec 1, [4.1.2].

3.2 Shaft material

3.2.1 Shaft material for electric propulsion motors and for main engine driven generators where the shaft is part of the propulsion shafting is to be certified by the Society.

3.2.2 Shaft material for other machines is to be in accordance with recognized international or national standard.

3.3 Tests

3.3.1 Type test are to be carried out on a prototype machine or on the first batch of machines, and routine tests carried out on subsequent machines in accordance with Tab 1.

3.3.2 Where the test procedure is not specified, the requirements of IEC 60034-1 apply.

Table 1 : Tests to be carried out on electrical rotating machines

No	Tests	a.c. Generators		Motors	
		Type test **(1)**	Routine test **(2)**	Type test **(1)**	Routine test **(2)**
1	Examination of the technical documentation **(3)**, visual inspection in compliance with design drawings	X	X	X	X
2	Insulation resistance measurement (stator and rotor windings)	X	X	X	X
3	Winding resistance measurement (stator and rotor)	X	X	X	X
4	Verification of the voltage regulation system	X	X **(4)**		
5	Rated load test and temperature rise measurement	X		X	
6	Overcurrent test	X			
7	Overtorque test			X	
8	Verification of steady short-circuit conditions **(5)**	X			
9	Overspeed test	X	X	X	
10	Dielectric strength test (stator and rotor windings)	X	X	X	X
11	No load test	X	X	X	X
12	Verification of degree of protection	X		X	
13	Verification of bearings	X	X	X	X

(1) Type test on prototype machine or test on at least the first batch of machines.
(2) The reports of machines routine tested are to contain the manufacturer's serial number of the machine which has been type tested and the test result.
(3) For a.c. Generators, documentation showing the transient behavior of the short circuit current is to be submitted for information.
(4) Only functional test of the voltage regulator system.
(5) Verification of steady short-circuit condition applies to synchronous machines only.

3.3.3 Testing of generating sets

Generating sets are to be submitted to the following tests:

- Load impact tests on whole assembled system are to be performed, as described in Ch 1, Sec 2, [4.3.3] item c)3) and c)4)
- Test of alarms and safeties, as per applicable requirements
- Test of voltage regulation, as described in [4.4]

Assembled generating sets of an electrical power of 100 kVA and over are to be tested at manufacturer premises with BV attendance prior installation on board.

When the whole assembled generating set cannot be tested at the Manufacturer's premises, those tests are to be carried out after installation and assembly on board.

4 Description of test

4.1 Technical documentation and visual inspection

4.1.1 Technical documentation of machines rated at 100 kW (kVA) and over are to be available for examination by the Surveyor.

4.1.2 A visual inspection of the machine is to be made to ensure, as far as practicable, that it complies with the technical documentation.

4.2 Insulation resistance measurement

4.2.1 Immediately after the high-voltage tests the insulation resistances are to be measured using a direct current insulation tester between:

a) all current carrying parts connected together and earth

b) all current carrying parts of different polarity or phase, where both ends of each polarity or phase are individually accessible.

The minimum values of test voltages and corresponding insulation resistances are given in Tab 2. The insulation resistance is to be measured close to the operating temperature, or an appropriate method of calculation is to be used.

Table 2 : Minimum insulation resistance

Rated voltage Un V	Minimum test voltage V	Minimum insulation resistance MΩ
Un = 250	2 Un	1
250 < Un ≤ 1000	500	1
1000 < Un ≤ 7200	1000	Un/1000 + 1
7200 < Un ≤ 15000	5000	Un/1000 + 1

4.3 Winding resistance measurement

4.3.1 The resistances of the machine windings are to be measured and recorded using an appropriate bridge method or voltage and current method.

4.4 Verification of the voltage regulation

4.4.1 The alternating current generator, together with its voltage regulation system, is to be verified in such a way that, at all loads from no load running to full load, the rated voltage at the rated power factor is maintained under steady conditions within ± 2,5%. These limits may be increased to ± 3,5% for emergency sets.

4.4.2 When the generator is driven at rated speed, giving its rated voltage, and is subjected to a sudden change of symmetrical load within the limits of specified current and power factor, the voltage is not to fall below 85% nor exceed 120% of the rated voltage.

4.4.3 The voltage of the generator is then to be restored to within plus or minus 3% of the rated voltage for the main generator sets in not more than 1.5 s. For emergency sets, these values may be increased to plus or minus 4% in not more than 5 s, respectively.

4.4.4 In the absence of precise information concerning the maximum values of the sudden loads, the following conditions may be assumed: 60% of the rated current with a power factor of between 0,4 lagging and zero to be suddenly switched on with the generator running at no load, and then switched off after steady-state conditions have been reached.

Subject to the Society's agreement, such voltage regulation during transient conditions may be calculated values based on the previous type test records, and need not to be tested during factory testing of a generator.

4.5 Rated load test and temperature rise measurements

4.5.1 The temperature rises are to be measured at the rated out-put, voltage and frequency and for the duty for which the machine is rated and marked in accordance with the testing methods specified in IEC 60034-1, or by means of a combination of other tests (see indirect methods in Ch 2, App 1 for synchronous machines and in Ch 2, App 2 for induction machines).

4.5.2 The limits of temperature rise above ambient air temperature of 45°C for air-cooled machines are those given in Tab 3.

Table 3 : Temperature rise limits for air-cooled machines based on an ambient temperature of 45°C

No	Part of machines	Method of measurement of temperature **(1)**	Temperature rise, in °C, by class of insulation				
			A	E	B	F	H
1	a) a.c. windings of machines having outputs of 5000 kW (or kVA) or more	R ETD	55 60	– –	75 80	95 100	120 125
	b) a.c. windings of machines having outputs of less than 5000 kW (or kVA)	R ETD	55 60	70 –	75 85	100 105	120 125
2	Windings of armatures with commutators	T R	45 55	60 70	65 75	80 100	100 120
3	Field windings of a.c. and d.c machines having d.c. excitation other than those in item 4	T R	45 55	60 70	65 75	80 100	100 120
4	a) Field windings of synchronous machines with cylindrical rotors having d.c. excitation	R	–	–	85	105	130
	b) Stationary field windings of d.c. machines having more than one layer	T R ETD	45 55 –	60 70 –	65 75 85	80 100 105	100 120 130
	c) Low resistance field windings of more than one layer, and compensating windings	T, R **(2)**	55	70	75	95	120
	d) Single-layer windings with exposed bare surfaces	T, R **(2)**	60	75	85	105	130
5	Permanently short-circuited, insulated windings	T	55	70	75	95	120
6	Permanently short-circuited uninsulated windings	The temperature rise of these parts is in no case to reach such a value that there is a risk of damage to any insulating or other material on adjacent parts					
7	Magnetic core and other parts not in contact with windings						
8	Magnetic core and other parts in contact with windings	T	55	70	75	95	120
9	Commutators and sliprings, open or enclosed **(3)**	T	55	65	75	85	95

(1) T : Measurement by the thermometer method
R : Measurement by the resistance method
ETD : Measurement by embedded temperature detectors.
(2) Temperature rise measurement is to use the resistance method R whenever practicable.
(3) If commutators and sliprings are adjacent to windings with a lower insulation class, the temperature rises for this class apply.

4.6 Overcurrent/overtorque test

4.6.1 Overcurrent test is to be carried out as a type test for generators, as required in IEC 60034-1. The overcurrent test is the proof of current capability of the windings, wires, connections etc. of each machine.

AC generators are to be capable of withstanding a current equal to 1,5 times the rated current for not less than 30 s.

Note 1: This test may be performed in conjunction with the short-circuit testing, provided the electrical input energy to the machine is not less than that required for the above overload capability.

4.6.2 Overtorque test is to be carried out as a type test for motors, as required in IEC 60034-1. The overtorque test is a proof of momentary excess torque capability of the machine.

General purpose rotating machines are to be designed to withstand the following excess torque:

- AC induction motors and DC motors: 60% in excess of the torque that corresponds to the rating, for 15 s, without stalling or abrupt change in speed (under gradual increase of torque), the voltage and frequency being maintained at their rated value
- AC synchronous motors with salient poles: 50% in excess of the torque that corresponds to the rating, for 15 s, without falling out of synchronism, the voltage, frequency and excitation current being maintained at their rated values

- AC synchronous motors with wound (induction) or cylindrical rotors: 35% in excess of the torque that corresponds to the rating, for 15 s, without losing synchronism, the voltage and frequency being maintained at their rated value.

Note 1: The overtorque test can be replaced at a routine test by an overcurrent test.

Note 2: The overtorque test may be omitted for electrical propulsion motor supplied by converter if an overload protection / limitation is provided inside the converter. Justifications are to be transmitted by the converter manufacturer.

4.6.3 In the case of machines for special uses (e.g. for wind-lasses), overload values other than the above may be considered.

4.7 Verification of the steady short circuit current

4.7.1 It is to be verified that under steady state short-circuit conditions, the generator with its voltage regulating system is capable of maintaining, without sustaining any damage, a current of at least three times the rated current for a duration of at least 2 s or, where precise data is available, for a duration of any time delay which may be fitted in a tripping device for discrimination purposes.

In order to provide sufficient information for determining the discrimination settings in the distribution system where the generator is going to be used, the generator manufacturer is to provide the Society, for information, with documentation showing the transient behavior of the short circuit current upon a sudden short-circuit occurring when excited, and running at nominal speed. The influence of the automatic voltage regulator is to be taken into account, and the setting parameters for the voltage regulator are to be noted together with the decrement curve. Such a decrement curve is to be available when the setting of the distribution system's short-circuit protection is calculated. The decrement curve need not be based on physical testing. The manufacturer's simulation model for the generator and the voltage regulator may be used where this has been validated through the previous type test on the same model.

4.8 Overspeed test

4.8.1 Machines are to withstand the overspeed test as specified in IEC 60034-1.

4.9 Dielectric strength test

4.9.1 New and completed rotating machines are to withstand a dielectric test as specified in IEC 60034-1.

4.9.2 For high-voltage machines an impulse test is to be carried out on the coils according to Ch 2, Sec 13.

4.9.3 When it is necessary to perform an additional high-voltage test, this is to be carried out after any further drying, with a test voltage of 80% of that specified in IEC 60034-1.

4.9.4 Completely rewound windings of used machines are to be tested with the full test voltage applied in the case of new machines.

4.9.5 Partially rewound windings are to be tested at 75% of the test voltage required for new machines. Prior to the test, the old part of the winding is to be carefully cleaned and dried.

4.9.6 Following cleaning and drying, overhauled machines are to be subjected to a test at a voltage equal to 1,5 times the rated voltage, with a minimum of 500 V if the rated voltage is less than 100 V, and with a minimum of 1000 V if the rated voltage is equal to or greater than 100 V.

4.9.7 A repetition of the high-voltage test for groups of machines and apparatus is to be avoided if possible, but if a test on an assembled group of several pieces of new apparatus, each of which has previously passed its high-voltage test, is per-formed, the test voltage to be applied to such assembled group is 80% of the lowest test voltage appropriate for any part of the group.

Note 1: For windings of one or more machines connected together electrically, the voltage to be considered is the maximum voltage that occurs in relation to earth.

4.10 No load test

4.10.1 Machines are to be operated at no load and rated speed whilst being supplied at rated voltage and frequency as a motor while generators are to be driven by a suitable means and excited to give rated terminal voltage.

During the running test, the vibration of the machine and operation of the bearing lubrication system, if appropriate, are to be checked.

4.11 Verification of degree of protection

4.11.1 As specified in IEC 60034-5.

4.12 Verification of bearings

4.12.1 Upon completion of the above tests, machines which have sleeve bearings are to be opened upon request for examination by the Surveyor, to establish that the shaft is correctly seated in the bearing shells.

5 Additional tests for rotating machines used as propulsion motor or thruster

5.1 General

5.1.1 In addition to the tests defined in Tab 1, rotating machines used as propulsion motor or thruster and developing a power of more than 1 MW are to be subjected to the following requirements and tests during their assembly:

a) Shaft line
- requirements of Ch 1, Sec 7 apply

b) Rotor winding assembly
- dynamic balancing

c) Stator winding assembly
- dielectric test (after impregnation)
- insulation resistance measurement (after impregnation)

d) Frame
- visual examination in compliance with design drawings
- liquid penetrant test of 10% of the structure welds and 100% of the handling points.

e) Watercooler
- visual examination in compliance with design drawings
- performance test (see temperature rise measurement test in Tab 1)

f) Hydrostatic jacking unit
- pressure test
- working test under nominal conditions.

Section 5 Transformers

1 Constructional requirements

1.1 Construction

1.1.1 Transformers, except those for motor starting, are to be double wound (two or more separate windings).

1.1.2 Transformers are normally to be of the dry, air-cooled type.

1.1.3 When a forced air cooling system is used, an alarm is to be activated in the event of its failure.

1.1.4 Liquid-cooled transformers may be used provided that:

- the liquid is non-toxic and of a type which does not readily support combustion
- the construction is such that the liquid is not spilled in inclined position
- temperature and pressure relief devices with an alarm are installed
- drip trays or other suitable arrangements for collecting the liquid from leakages are provided
- a liquid gauge indicating the normal liquid level range is fitted.

1.1.5 Transformers are to have enclosures with a degree of protection in accordance with Ch 2, Sec 3, Tab 2.

1.2 Terminals

1.2.1 Suitable fixed terminal connections are to be provided in an accessible position with sufficient space for convenient connection of the external cables.

1.2.2 Terminals are to be clearly identified.

1.3 Voltage variation, short-circuit conditions and parallel operation

1.3.1 Under resistive load (cos Φ = 1), the voltage drop from no load to full load is not to exceed 2,5%.

For transformers with a power lower than 5 kVA per phase, this voltage drop is not to exceed 5%.

An exception is made for special transformers, such as starting and instrument transformers, for which a different voltage variation may be considered.

1.3.2 In determining the voltage ratio and the impedance voltage of transformers, account is to be taken of the total permitted voltage drop from the main switchboard's busbars to the consumers (see Ch 2, Sec 3, [9.11.4]).

1.3.3 Transformers are to be constructed to withstand, without damage, the thermal and mechanical effects of a secondary terminal short-circuit for 2 s, with rated primary voltage and frequency.

For transformers of 1 MVA and over, this is to be justified with appropriate tests or documentation.

1.3.4 When transformers are so arranged that their secondary windings may be connected in parallel, their winding connections are to be compatible, their rated voltage ratios are to be equal (with tolerances allowed) and their short-circuit impedance values, expressed as a percentage, are to have a ratio within 0,9 to 1,1.

When transformers are intended for operation in parallel, the rated power of the smallest transformer in the group is to be not less than half of the rated power of the largest transformer in the group.

1.4 Electrical insulation and temperature rise

1.4.1 Insulating materials for windings and other current carrying parts are to comply with the requirements of Ch 2, Sec 2.

1.4.2 All windings of air-cooled transformers are to be suitably treated to resist moisture, air salt mist and oil vapours.

1.4.3 The permissible limits of temperature rise with an ambient air temperature of 45°C for (natural or forced) air-cooled transformers are given in Tab 1. The temperature rises shown for windings refer to measurement by the resistance method while those for the core refer to the thermometer method.

1.4.4 For dry-type transformers cooled with an external liquid cooling system, the permissible limits of temperature rise with a sea water temperature of 32°C are 13°C higher than those specified in Tab 1.

1.4.5 For liquid-cooled transformers, the following temperature rises measured by the resistance method apply:

- 55°C where the fluid is cooled by air
- 68°C where the fluid is cooled by water.

Table 1 : Temperature rise limits for transformers

No	Part of machine	Temperature rise by class of insulation, in °C				
		A	E	B	F	H
1	Windings	55	70	75	95	120
2	Cores and other parts: a) in contact with the windings b) not in contact with the windings	a) the same values as for the windings b) in no case is the temperature to reach values such as to damage either the core itself or other adjacent parts or materials				

2 Testing

2.1 General

2.1.1 Transformers intended for essential services are to be subjected to the test stated in [2.2].

2.1.2 The manufacturer is to issue a test report giving, inter alia, information concerning the construction, type, serial number, insulation class and all other technical data relevant to the transformer, as well as the results of the tests required.

Such test reports are to be made available to the Society.

2.1.3 In the case of transformers which are completely identical in rating and in all other constructional details, it will be acceptable for the temperature rise test to be performed on only one transformer.

The results of this test and the serial number of the tested transformer are to be inserted in the test reports for the other transformers.

2.1.4 Where the test procedure is not specified, the requirements of IEC 60076 apply.

2.1.5 The tests and, if appropriate, manufacture of transformers of 100 kVA and over (60 kVA when single phase) intended for essential services are to be attended by a Surveyor of the Society.

Transformers of 5 kVA up to the limit specified above are approved on a case by case basis, at the discretion of the Society, subject to the submission of adequate documentation and routine tests.

2.2 Tests on transformers

2.2.1 Tests to be carried out on transformers are specified in Tab 2.

Table 2 : Tests to be carried out on transformers

No	Tests	Type test **(1)**	Routine test **(2)**
1	Examination of the technical documentation, as appropriate, and visual inspection **(3)**	X	X
2	Insulation resistance measurement	X	X
3	Measurement of winding resistance	X	X
4	Measurement of voltage ratio and check of phase displacement	X	X
5	Measurement of short-circuit impedance and load loss	X	X
6	Measurements of no-load loss and no load current	X	X
7	high-voltage test	X	X
8	Induced voltage test	X	X
9	Temperature-rise measurement	X **(4)**	

(1) Type test on prototype transformer or test on at least the first batch of transformers.
(2) The certificates of transformers routine tested are to contain the manufacturer's serial number of the transformer which has been type tested and the test result.
(3) A visual examination is to be made of the transformer to ensure, as far as practicable, that it complies with technical documentation; inspection of enclosure, terminations, instrumentation or protection.
(4) Temperature rise test may be omitted for starting transformer.

2.3 Insulation tests

2.3.1 Transformers are to be subjected to a high-voltage test in accordance with the procedure defined in IEC publication 60076-3.

2.3.2 The test voltage is to be applied between each winding under test and the other windings not under test, core and enclosure all connected together.

Single-phase transformers for use in a polyphase group are to be tested in accordance with the requirements applicable to that group.

2.3.3 The r.m.s. value of the test voltage is to be equal to 2 U + 1000 V, with a minimum of 2500 V, where U is the rated voltage of the winding. The full voltage is to be maintained for 1 minute.

2.3.4 Partially rewound windings are to be tested at 80% of the test voltage required for new machines.

2.3.5 The insulation resistance of a new, clean and dry transformer, measured after the temperature rise test has been carried out (at or near operating temperature) at a voltage equal to 500 V d.c., is to be not less than 5 MΩ.

2.3.6 Transformers are to be subjected to an induced voltage insulation test by applying to the terminals of the winding under test a voltage equal to twice the rated voltage. The duration of the test is to be 60 s for any test frequency fp up to and including twice the rated frequency fn.

If the test frequency exceeds twice the rated frequency, the test time in seconds will be 120 fn/fp with a minimum of 15s.

Section 6 Semiconductor Converters

1 Constructional requirements

1.1 Construction

1.1.1 Semiconductor converters are to comply with the relevant requirements for switchgear assemblies (see Ch 2, Sec 8).

1.1.2 The design of semi-conductor converters is to comply with the requirements of IEC 60146-1-1:2024 with applicable requirements modified to suit marine installations like e.g. environmental requirements stated in Ch 2, Sec 2.

1.1.3 The design of semi-conductor converters for power supply is to comply with the requirements of IEC 62040 series (see Article [2]).

1.1.4 The design of semi-conductor converters for motor drives is to comply with the requirements of IEC 61800 series.

1.1.5 The monitoring and control circuits are generally to comply with the requirements of Part C, Chapter 3.

1.1.6 For liquid-cooled converters the following provisions are to be satisfied:

- liquid is to be non-toxic and of low flammability
- drip trays or other suitable means are to be provided to contain any liquid leakages
- the resistivity of the cooling fluid in direct contact with semiconductor or other current carrying parts is to be monitored and an alarm initiated if the resistivity is outside the specified limits.

1.1.7 Where forced cooling is used, the temperature of the heated cooling medium is to be monitored.

If the temperature exceeds a preset value an alarm is to be given and the shutdown of the converter is to be activated.

1.1.8 Where forced (air or liquid) cooling is provided, it is to be so arranged that the converter cannot be or remain loaded unless effective cooling is maintained.

Alternatively, other effective means of protection against overtemperature may be provided.

1.1.9 Stacks of semiconductor elements, and other equipment such as fuses, or control and firing circuit boards etc., are to be so arranged that they can be removed from equipment without dismantling the complete unit.

1.1.10 Semiconductor converters are to be rated for the required duty having regard to the peak loads, system transient and overvoltage and to be dimensioned so as to withstand the maximum short-circuit currents foreseen at the point of installation for the time necessary to trip the protection of the circuits they supply.

1.2 Protection

1.2.1 Semiconductor elements are to be protected against short-circuit by means of devices suitable for the point of installation in the network.

1.2.2 Overcurrent or overvoltage protection is to be installed to protect the converter. When the semiconductor converter is designed to work as an inverter supplying the network in transient periods, precautions necessary to limit the current are to be taken.

1.2.3 Semiconductor converters are not to cause distortion in the voltage wave form of the power supply at levels exceeding the voltage wave form tolerances at the other user input terminals (see Ch 2, Sec 2, [2.4]).

1.2.4 An alarm is to be provided for tripping of protective devices against overvoltages and overcurrents in electric propulsion converters and for converters for the emergency source of power.

1.3 Parallel operation with other power sources

1.3.1 For converters arranged to operate in parallel with other power sources, load sharing is to be such that under normal operating conditions overloading of any unit does not occur and the combination of paralleled equipment is stable.

1.4 Temperature rise

1.4.1 The permissible limit of temperature rise of the enclosure of the semiconductors is to be assessed on the basis of an ambient air temperature of 45°C or sea water temperature of 32°C for water-cooled elements, taking into account its specified maximum permissible temperature value.

1.4.2 The value of the maximum permissible temperature of the elements at the point where this can be measured (point of reference) is to be stated by the manufacturer.

1.4.3 The value of the mean rated current of the semiconductor element is to be stated by the manufacturer.

1.5 Creepage and clearance distances

1.5.1 Creepage and clearance distances are to comply with the requirements specified in IEC 61800-5-1:2023. An interpolation of the specified values is permitted for high-voltage semi-conductor converters.

2 Requirements for uninterruptible power system (UPS) units as alternative and/or transitional power

2.1 Definitions

2.1.1 Uninterruptible power system (UPS)

Combination of converters, switches and energy storage means, for example batteries, constituting a power system for maintaining continuity of load power in case of input power failure (see IEC 62040-3:2021).

2.1.2 Off line UPS unit

A UPS unit where under normal operation the output load is powered from the bypass line (raw mains) and only transferred to the inverter if the bypass supply fails or goes outside preset limits. This transition will invariably result in a brief (typically 2 to 10 ms) break in the load supply.

2.1.3 Line interactive UPS unit

An off-line UPS unit where the bypass line switch to stored energy power when the input power goes outside the preset voltage and frequency limits.

2.1.4 On line UPS unit

A UPS unit where under normal operation the output load is powered from the inverter, and will therefore continue to operate without break in the event of the supply input failing or going outside preset limits.

2.2 Design and construction

2.2.1 UPS units are to be constructed in accordance with IEC 62040-1:2019, IEC 62040-2:2018, IEC 62040-3:2021, IEC 62040-4:2013 and/or IEC 62040-5-3:2016, as applicable, or an acceptable and relevant national or international standard.

2.2.2 The operation of the UPS is not to depend upon external services.

2.2.3 The type of UPS unit employed, whether off-line, line interactive or on-line, is to be appropriate to the power supply requirements of the connected load equipment.

2.2.4 An external bypass is to be provided.

2.2.5 The UPS unit is to be monitored and audible and visual alarm is to be given in a normally attended location for:

- power supply failure (voltage and frequency) to the connected load
- earth fault
- operation of battery protective device
- when the battery is being discharged
- when the bypass is in operation for on-line UPS units.

2.3 Location

2.3.1 The UPS unit is to be suitably located for use in an emergency.

2.3.2 UPS units utilising valve regulated sealed batteries may be located in compartments with normal electrical equipment, provided the ventilation arrangements are in accordance with the requirements of IEC 62040-1:2019, IEC 62040-2:2018, IEC 62040-3:2021, IEC 62040-4:2013 and/or IEC 62040-5-3:2016, as applicable, or an acceptable and relevant national or international standard.

2.4 Performance

2.4.1 The output power is to be maintained for the duration required for the connected equipment as stated in Ch 2, Sec 3, [3.6.3] and Pt D, Ch 11, Sec 5, [2.2.3].

2.4.2 No additional circuits are to be connected to the UPS unit without verification that the UPS unit has adequate capacity.

2.4.3 The UPS battery capacity is, at all times, to be capable of supplying the designated loads for the time specified in the regulations.

2.4.4 On restoration of the input power, the rating of the charge unit shall be sufficient to recharge the batteries while maintaining the output supply to the load equipment.

3 Testing

3.1 General

3.1.1 Converters intended for essential services are to be subjected to the tests stated in [3.2].

3.1.2 The manufacturer is to issue a test report giving information on the construction, type, serial number and all technical data relevant to the converter, as well as the results of the tests required.

3.1.3 In the case of converters which are completely identical in rating and in all other constructional details, it will be acceptable for the rated current test and temperature rise measurement stipulated in [3.2] not to be repeated.

3.1.4 The tests and, if appropriate, manufacture of converters of 50 kVA and over intended for essential services are to be attended by a Surveyor of the Society.

3.2 Tests on converters

3.2.1 Converters are to be subjected to tests in accordance with Tab 1.

Type tests are the tests to be carried out on a prototype converter or the first of a batch of converters, and routine tests are the tests to be carried out on subsequent converters of a particular type.

3.2.2 The tests listed in1 are to be performed in accordance with IEC 60146-1-1:2024. The relevant requirements of IEC 61800-5-1:2023 and of IEC 62040-3:2021 based on the equipment type also apply."

3.2.3 The electronic components of the converters are to be constructed to withstand the tests required in Ch 3, Sec 6.

3.2.4 Final approval of converters is to include complete function tests after installation on board, performed with all ship's systems in operation and in all characteristic load conditions.

Table 1 : Tests to be carried out on static converters

No	Tests	Type test **(1)**	Routine test **(2)**
1	Examination of the technical documentation, as appropriate, and visual inspection **(3)** including check of earth continuity	X	X
2	Light load function test to verify all basic and auxiliary functions	X	X
3	Rated current test	X	
4	Temperature rise measurement	X	
5	Insulation test (dielectric strength test and insulation resistance measurement)	X	X
6	Protection of the converters in case of failure of forced cooling system	X	X

(1) Type test on prototype converter or test on at least the first batch of converters.
(2) The certificates of converters routine tested are to contain the manufacturer's serial number of the converter which has been type tested and the test result.
(3) A visual examination is to be made of the converter to ensure, as far as practicable, that it complies with technical documentation.

3.3 Additional testing and survey for uninterruptible power system (UPS) units as alternative and/or transitional power

3.3.1 UPS units of 50 kVA and over are to be surveyed by the Society during manufacturing and testing.

3.3.2 Appropriate testing is to be carried out to demonstrate that the UPS unit is suitable for its intended environment. This is expected to include as a minimum the following tests:

- functionality, including operation of alarms
- ventilation rate
- battery capacity.

3.3.3 Where the supply is to be maintained without a break following a power input failure, this is to be verified after installation by practical test.

3.4 Insulation test

3.4.1 The test procedure is that specified in IEC Publication 60146.

3.4.2 The effective value of the test voltage for the insulation test is to be as shown in Tab 2.

Table 2 : Test voltages for high-voltage test on static converters

$\frac{U_m}{\sqrt{2}} = U$ in V **(1)**	Test voltage, in V
$U \leq 60$	600
$60 < U \leq 90$	900
$90 < U$	2 U + 1000 (at least 2000)
(1) U_m: highest crest value to be expected between any pair of terminals.	

Section 7 Battery Energy Storage Systems and Chargers

1 Batteries

1.1 General

1.1.1 The requirements of this Section apply to permanently installed battery energy storage systems permanently installed on board.

Specific requirements for Non Li-ion batteries are defined in Article [2].

Specific requirements for Li-ion batteries are defined in Article [3].

Additional requirements for ships assigned the notation **battery system** are defined in Article [5].

1.1.2 Battery energy storage systems may be of the lead-acid, nickel-alkaline or Li Ion type, due consideration being given to the suitability for any specific application.

Other types of storage batteries may be considered by the Society on a case-by-case basis.

1.1.3 Cells are to be assembled in suitable crates or trays equipped with handles for convenient lifting.

1.2 Definitions

1.2.1 Battery management system (BMS)

A battery management system is an electronic system associated with a battery pack which monitors and/or manages its electric and thermal state by controlling its environment, and which provides communication between the battery system and other macro-system controllers, such as a power management system (PMS).

1.2.2 Battery pack

Battery pack means one or more sub-packs that can work as a standalone unit.

1.2.3 Battery support system (BSS)

A battery support system is a group of interconnected and interactive parts that performs an essential task as a component of a battery system.

Such systems are, for example, electrolyte circulation pumps, cooling and heating devices.

1.2.4 Battery system

A battery system is an energy storage device that includes cells, cell assemblies or battery pack(s), as well as electrical circuits and electronics. See Fig 1.

1.2.5 Cell

Cell means the smallest unit of a battery.

Figure 1 : Battery system components

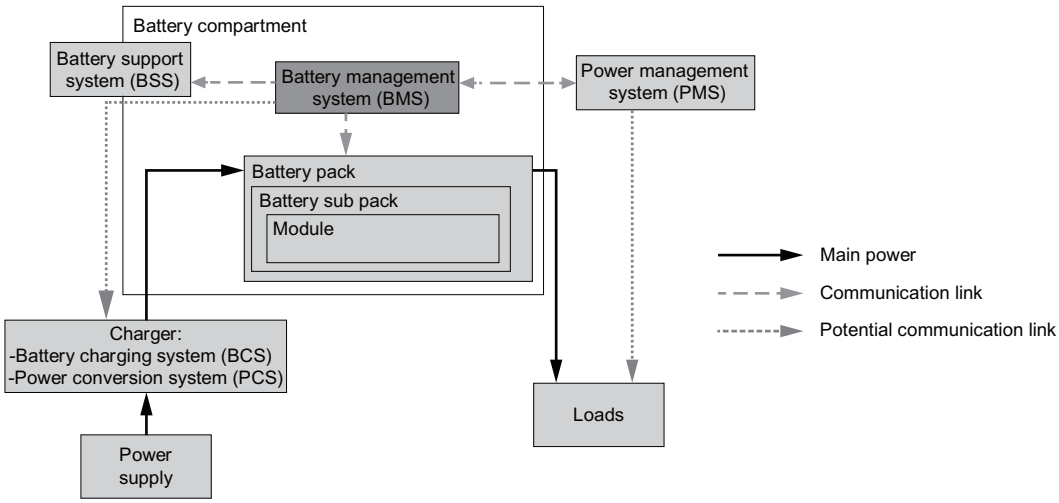

This configuration shows only one battery pack. The battery pack may be duplicated inside the battery system.

1.2.6 Module

A module is an assembly of cells including some levels of electronic control.

1.2.7 Rated capacity

Rated capacity means Supplier's specification of the total amount of ampere hours that can be withdrawn from a fully charged battery pack or system for a specified set of test conditions, such as discharge rate, temperature and discharge cut-off voltage.

1.2.8 Shelf life

Shelf life is the duration of storage under specified conditions at the end of which a battery retains the ability to give a specified performance.

1.2.9 State of charge (SOC)

State of charge means the available capacity in a battery pack or system, used to estimate the current charge level of a battery in use. The state of charge is expressed as a percentage of the rated capacity.

1.2.10 State of health (SOH)

State of health means the maximum available capacity in a battery pack or system compared to initial maximum capacity as a function of the battery lifetime. The state of health is expressed as a percentage of the rated capacity.

1.2.11 Sub-pack

Sub-pack means the assembly of one or more modules. This is the smallest unit that can be electrically isolated

1.2.12 Valve-regulated battery

A valve-regulated battery is one in which cells are closed but have an arrangement (valve) which allows the escape of gas if the internal pressure exceeds a predetermined value.

Note 1: The cells of batteries marketed as "sealed" or "maintenance free" and fitted with a pressure relief valve as a safety precaution to enable uncombined gas to be vented to the atmosphere should more properly be referred to as valve-regulated sealed batteries.

1.2.13 Vented battery

A vented battery is one in which the cells have a cover provided with an opening through which products of electrolysis and evaporation are allowed to escape freely from the cells to atmosphere.

1.3 Battery pack

1.3.1 Protection against ingress

Batteries are to have a degree of protection (IP) in relation with the location of the installation and the risk of ingress, according to Ch 2, Sec 3, [4]. In addition, the minimum required degree of protection for batteries is as follows:

- IP 4X for battery packs with nominal voltages in excess of 500 V DC
- Not less than IP 44 for battery packs located within areas protected by fixed water-based local application fire-fighting systems (FWBLAFFS).

1.4 Battery maintenance

1.4.1 Battery compartment and overhaul battery system elements are to be readily accessible for inspection, repairs and common maintenance

1.4.2 Where batteries are fitted for use for essential and emergency services, a schedule of such batteries is to be compiled and maintained. The schedule is to include at least the following information regarding the batteries:

- Type and manufacturer’s type designation
- Voltage and ampere-hour rating
- Location
- Equipment and/or system(s) served
- maintenance/replacement cycle dates
- date(s) of last maintenance and/or replacement
- for replacement batteries in storage, the date of manufacture and shelf life.

1.4.3 Procedures are to be put in place to ensure that, where batteries are replaced, they are of an equivalent performance type.

1.4.4 Where vented type batteries replace valve-regulated sealed types, it is to be ensured that there is adequate ventilation and that the Society's requirements relevant to the location and installation of vented types batteries are complied with.

1.4.5 Details of the schedule and of the procedures are to be included in the ship's safety management system and be integrated into the ship's operational maintenance routine, as appropriate, to be verified by the Society's surveyor.

1.5 Testing and certification process for batteries

1.5.1 Application

The requirements of [1.5] to [1.8] apply to:

- Li Ion batteries of capacity above 20kWh
- Li Ion batteries used as emergency source or transitional source
- Other batteries covered by the additional service feature **battery system**.

1.5.2 Certification

Pieces of equipment are to be certified as defined in Tab 1 where symbols have the following meaning:

C : A BV product certificate is required with invitation of the Surveyor to attend the tests unless otherwise agreed, in addition to the manufacturer's document stating the results of the tests performed and/or compliance with the approved type as applicable

TA : Type Approval is required

TA (HBV): Type Approval is required with work's recognition (HBV scheme as per NR320)

W : A manufacturer's document is required, stating the results of the tests performed and/or stating compliance with the approved type (as applicable)

X : Examinations and tests are required

Table 1 : Certification requirements

Item	Product certification			
	Design assessment / Approval	Raw material certificate	Examination and testing	Product certificate
Battery cell	TA (HBV)		X **(1)**	W
Battery pack, including the associated BMS, if any	TA		X **(2)**	C
(1) See [1.6] **(2)** See [1.7]				

1.6 Battery cells

1.6.1 Type approval

Battery cells are to be tested in accordance with a recognized standard accepted by the Society. See [3.1.1] for Li Ion batteries.

The scope of tests is to include as least:

- External short circuit
- Impact / Crush
- Drop
- Thermal abuse / Thermal cycling
- Overcharge
- Forced discharge
- Internal short circuit
- Insulation tests (High-voltage test and insulation resistance test according to Ch 2, Sec 8, [3]).

1.6.2 Factory acceptance testing

The scope of tests is to include at least:

- Insulation tests (High-voltage test and insulation resistance test according to Ch 2, Sec 8, [3])

1.7 Battery packs and associated BMS

1.7.1 Type approval

Battery packs are to be tested in accordance with a recognized standard accepted by the Society. See [3.1.1] for Li Ion batteries.

The scope of tests is to include at least:

a) Propagation/internal thermal event

b) Overcharge control of voltage

c) Overcharge control of current

d) Overheating control

e) Insulation tests (High-voltage test and insulation resistance test according to Ch 2, Sec 8, [3])

f) IP characteristics

g) Safety function tests:
- Emergency stop function
- Alarms and shutdowns
- Temperature protection BMS
- Overvoltage protection BMS
- Undervoltage protection BMS
- Communication Failure

h) Discharge performance (rated capacity check)

i) Endurance

j) Charge retention and recovery (self discharge)

k) Additional tests based on FMEA (sensors failures)

l) Environmental tests according to Ch 3, Sec 6.

1.7.2 Gas analysis

The types and quantities of gases released by the cell when submitted to the propagation/internal test required in [1.7.1], item a) are to be measured and recorded. This gas analysis will be used as an input for the risk analysis required in [3.2.1], [5.4.2] or Ch 2, Sec 12, [5.2.1], as relevant, and the design of the battery compartment, see Ch 2, Sec 11, [6].

1.7.3 Factory acceptance testing

The scope of tests is to include at least:

a) ability to achieve safety functions

b) proper working of alarms and defaults and related functions and/or interfacing to the other ship systems

c) proper working of monitoring systems

d) temperature rise test

Note 1: When this test is impractical at the factory, the following alternative may be considered:
- a calculation based on a method validated by tests is to be submitted to the Society, and
- Proper working of the cooling circuit is to be checked after installation onboard, see Ch 2, Sec 15, [4.8.3].

Note 2: The test condition to be selected is the most unfavourable nominal operating conditions of the batteries (maximum charging or discharging current which will produce the maximum heating losses)

e) Insulation tests (High-voltage test and insulation resistance test according to Ch 2, Sec 8, [3]).

1.8 Equipment used in battery systems

1.8.1 Approval and testing of pieces of equipment, such as safety electrical equipment, fuses, over current protective devices, circuit breakers, contractors and cables, are to comply with the applicable requirements of Part C, Chapter 2.

Note 1: See also NR266, Requirements for Survey of Materials and Equipment for the Classification of Ships and Offshore Units.

2 Non Li-ion batteries

2.1 Vented batteries

2.1.1 Vented batteries are to be constructed to withstand the movement of the ship and the atmosphere (salt mist, oil) to which they may be exposed.

2.1.2 Battery cells are to be so constructed as to prevent spilling of electrolyte at any inclination of the battery up to 40° from the vertical.

2.1.3 It is to be possible to check the electrolyte level and the pH.

2.2 Valve-regulated batteries

2.2.1 Cell design is to minimise risks of release of gas under normal and abnormal conditions.

3 Li-ion batteries

3.1 Li Ion batteries above 20kWh

3.1.1 Battery cells are to be designed in accordance with IEC 62619:2022 and IEC 62281: 2023 or other recognized standard accepted by the Society. Battery pack are to be designed in accordance with IEC 62619:2022 and IEC 62620:2023 or other recognized standard accepted by the Society.

3.1.2 Li Ion battery pack charging and discharging are to be controlled with a BMS that is to be able to:

- monitor the battery pack state at the level at least of modules, sub-packs and packs regarding at least voltage, temperature, and, if necessary, to monitor current flow and detect leakage currents
- estimate the potential need for battery pack or sub-pack connection or disconnection by determining if the battery pack or sub-pack is in a critical state, if there is a need coming from the PMS (Power Management System) or any other connected control system
- control the proper connection and disconnection of the battery packs and sub-packs
- optimise battery lifetime and energy availability by monitoring and controlling battery pack SOC and SOH, managing cells, sub-packs and packs balancing, and monitoring and controlling BSS.

3.1.3 Battery pack cooling

Battery pack cooling is to be ensured either by the ventilation of the battery compartment or by direct cooling (dedicated cooling circuit).

When a direct cooling is installed, the following alarms are to be provided, where applicable:

- High temperature of the cooling air of battery pack provided with forced ventilation
- Reduced flow of primary and secondary coolants of Battery packs having a closed cooling system with a heat exchanger.

As an alternative to monitoring the air temperature and the cooling flow, electrical supply to the fan may be monitored.

3.2 Li Ion batteries below 20kWh

3.2.1 a risk analysis is to be conducted and submitted to the Society for review.

3.3 Li Ion batteries used as emergency source or transitional source

3.3.1 Battery cells are to be designed in accordance with IEC 62619:2022 and IEC 62281:2023 or other recognized standard accepted by the Society. Battery pack are to be designed in accordance with IEC 62619:2022 and IEC 62620:2023 or other recognized standard accepted by the Society.

3.3.2 Where the additional service feature battery system is completed by -ZE, the ship is to rely only on batteries for electrical power supply, including emergency power supply, and for propulsion.

4 Chargers

4.1 General

4.1.1 Chargers are to be adequate for the batteries for which they are intended and provided with a voltage regulator.

4.1.2 In the absence of indications regarding its operation, the battery charger is to be such that the completely discharged battery can be recharged to 80% capacity within a period of 10 hours without exceeding the maximum permissible charging current. A charging rate other than the above (e.g. fully charged within 6 hours for batteries for starting of motors) may be required in relation to the use of the battery.

4.1.3 For floating service or for any other condition where the load is connected to the battery while it is on charge, the maximum battery voltage is not to exceed the safe value of any connected apparatus.

Note 1: Consideration is to be given to the temperature variation of the batteries.

4.1.4 The battery charger is to be designed so that the charging current is set within the maximum current allowed by the manufacturer when the battery is discharged and the floating current to keep the battery fully charged.

4.1.5 Trickle charging to neutralise internal losses is to be provided. An indication is to be provided to indicate a charging voltage being present at the charging unit.

4.1.6 Protection against reversal of the charging current is to be provided.

4.1.7 Battery chargers are to be constructed to simplify maintenance operation. Indications are to be provided to visualise the proper operation of the charger and for troubleshooting.

4.2 Testing

4.2.1 Battery chargers are to be subjected to tests in accordance with Tab 2.

Type tests are the tests to be carried out on a prototype charger or the first of a batch of chargers, and routine tests are the tests to be carried out on subsequent chargers of a particular type.

4.2.2 The electronic components of the battery chargers are to be constructed to withstand the tests required in Ch 3, Sec 6.

4.2.3 The tests of battery chargers of 5 kW and over intended for essential services are to be attended by a Surveyor of the Society.

Table 2 : Tests to be carried out on battery chargers

No.	Tests	Type test **(1)**	Routine test **(2)**
1	Examination of the technical documentation, as appropriate, and visual inspection **(3)** including check of earth continuity	X	X
2	Functional tests (current and voltage regulation, quick, slow, floating charge, alarms)	X	X
3	Temperature rise measurement	X	
4	Insulation test (dielectric strength test and insulation resistance measurement)	X	X

(1) Type test on prototype battery charger or test on at least the first batch of battery chargers.
(2) The certificates of battery chargers routine tested are to contain the manufacturer's serial number of the battery charger which has been type tested and the test result.
(3) A visual examination is to be made of the battery charger to ensure, as far as practicable, that it complies with technical documentation.

5 Requirements for the additional service feature battery systems

5.1 Application

5.1.1 Where the battery is part of the main source of power and necessary to supply the services defined in Ch 2, Sec 3, [2.2.3] items a) to c), the ship is to be assigned the additional service feature **battery system**.

Note 1: Ships covered by SOLAS Convention are not normally allowed to rely only on batteries for electrical power supply. See Ch 2, Sec 3, [2.2.3].

5.2 Documents to be submitted

5.2.1 The documents to be submitted are listed in Tab 3.

5.3 System considered

5.3.1 The main components of a battery system in the scope of this Article are defined in Fig 1.

Table 3 : Documents to be submitted

No.	A/I **(1)**	Document
1	I	Power balance **(2)**
2	I	Risk analysis (see [5.4.2]) **(3)**
3	I	Failure analysis regarding availability of ship propulsion and energy
4	I	List of alarms and defaults **(4)**
5	I	Justification for choice of fire-extinguishing system
6	I	Operation manual of battery and BMS

(1) A = to be submitted for approval; I = to be submitted for information
(2) This document is to take into account the achievable configurations for energy production and distribution
(3) This document is to consider together battery and BMS if any
(4) This list is to describe alarms and defaults directly connected to the battery system and interfaces with other ship systems, if any

5.4 Qualification of the battery system

5.4.1 As a deviation from Ch 2, Sec 3, [2.2.3], a risk-based qualification of the battery system is to be performed to the satisfaction of the Society. See NI525 for guidance.

5.4.2 A risk analysis, whatever the type of batteries, is to be conducted and submitted to the Society.

An HAZID study is to be carried out for battery system installation. It is to cover at least the following spaces, zones and systems:

- Battery Room (Location and adjacent spaces)
- Battery system and auxiliaries
- An additional vibration analysis of the battery system may be required, taking into account the type of ship and its operational activity.

The risks identified by the HAZID study may be mitigated by operational procedures.

The following risks, at least, are to be covered:

- risk of thermal runaway
- risk of emission of combustion gases
- risk of internal short-circuit
- risk of external short-circuit
- risk of sensor failure (voltage, temperature, gas sensor)
- risk of high impedance (cell, connectors)
- risk of loss of cooling
- risk of leakage (electrolyte, cooling system)
- risk of failure of BMS (error on manoeuvring breakers, overloading, over discharge)
- risk for external ingress (fire, fluid leakage, fire-fighting water).

Adequation of fire-extinguishing system to battery type is to be documented.

Appropriate alarms and shutdown are to be described (for example, default on the cooling system when necessary to proper operation of the battery system).

5.5 General requirements

5.5.1 When an emergency source of power is required on board the ship, it is to remain independent from the battery source considered for propulsion and/or main source of power.

5.5.2 Batteries may be of the lead-acid type, nickel alkaline type or Li Ion type, due consideration being given to the suitability for any specific application. Other types of batteries may be considered.

5.5.3 These requirements are supplementary to those mentioned in [1], Ch 2, Sec 11, [6] and Ch 2, Sec 12, [5].

5.5.4 Ventilation

The power supplied to the ESS ventilation fans is to be provided from two alternative circuits; one of which is the main power source and the other is the emergency source. The supply circuits are to be managed through a change-over switch.

5.5.5 Fire protection

a) Battery rooms, except for Li-ion battery rooms, are to be regarded as:
   - auxiliary machinery spaces of moderate fire risk i.e. cat(11) on passenger ships carrying more than 36 passengers
   - other machinery spaces i.e. cat(7) on other ships

   The boundary between two battery rooms is to have at least A-0 fire integrity.

b) A fixed fire detection and fire alarm system complying with the requirements of Ch 4, Sec 15, [8] is to be provided in battery rooms.

c) Battery rooms are to be fitted with a fixed fire-extinguishing system according to Ch 4, Sec 6, [3.1]. This system is to be compatible with the technology of the battery employed, according to the battery manufacturer specification.

d) Requirements for battery rooms containing Li-ion batteries are given in Ch 2, Sec 11, [6.5].

5.6 Availability of power

5.6.1 When only batteries are installed for electrical power supply, the battery system is to be fitted with at least two independent packs of batteries to supply the main energy source.

5.6.2 A failure analysis taking into account single failure of the battery system and ability of the ship to reach a safe destination or to operate life-saving appliances and safety systems is to be provided.

5.6.3 It is to be possible to steer and manoeuvre the ship with one battery pack unavailable.

5.6.4 If the generator set, if any, or one battery pack is unavailable, the remaining battery packs are to be able to provide energy for 8-hour operations, as mentioned in Ch 1, Sec 10, [11] The duration may be reduced depending on the operational profile of the ship.

5.7 Test and certification process for batteries

5.7.1 Certification and production testing

Battery cells and the battery pack and the associated BMS if any are to be of a type approved by the Society. The requirements for certification and testing of the battery system are given in [1.5].

5.7.2 Onboard testing

The requirements for tests on board of the battery system are given in Ch 2, Sec 15, [4.8].

Section 8 Switchgear and Controlgear Assemblies

1 Constructional requirements for main and emergency switchboards

1.1 Construction

1.1.1 Construction is to be in accordance with IEC Publication 60092-302.

1.1.2 Where the framework, panels and doors of the enclosure are of steel, suitable measures are to be taken to prevent overheating due to the possible circulation of eddy currents.

1.1.3 Insulating material for panels and other elements of the switchboard is at least to be moisture-resistant and flame-retardant.

1.1.4 Switchboards are to be of dead front type, with enclosure protection according to Ch 2, Sec 3, Tab 2.

1.1.5 Switchboards are to be provided with insulated handrails or handles fitted in an appropriate position at the front of the switchboard. Where access to the rear is necessary for operational or maintenance purposes, an insulated handrail or insulated handles are to be fitted.

1.1.6 Where the aggregate capacity of generators connected to the main busbars exceeds 100 kVA, a separate cubicle for each generator is to be arranged with flame-retardant partitions between the different cubicles. Similar partitions are to be provided between the generator cubicles and outgoing circuits.

1.1.7 Instruments, handles or push-buttons for switchgear operation are to be placed on the front of the switchboard. All other parts which require operation are to be accessible and so placed that the risk of accidental touching of live parts, or accidental making of short-circuits and earthings, is reduced as far as practicable.

1.1.8 Where it is necessary to make provision for the opening of the doors of the switchboard, this is to be in accordance with one of the following requirements:

a) opening is to necessitate the use of a key or tool (e.g. when it is necessary to replace a lamp or a fuse-link)

b) all live parts which can be accidentally touched after the door has been opened are to be disconnected before the door can be opened

c) the switchboard is to include an internal barrier or shutter with a degree of protection not less than IP2X shielding all live parts such that they cannot accidentally be touched when the door is open. It is not to be possible to remove this barrier or shutter except by the use of a key or tool.

1.1.9 All parts of the switchboard are to be readily accessible for maintenance, repair or replacement. In particular, fuses are to be able to be safely inserted and withdrawn from their fuse-bases.

1.1.10 Hinged doors which are to be opened for operation of equipment on the door or inside are to be provided with fixing devices for keeping them in open position.

1.1.11 Means of isolation of the circuit-breakers of generators and other important parts of the installation are to be provided so as to permit safe maintenance while the main busbars are alive.

1.1.12 Where components with voltage exceeding the safety voltage are mounted on hinged doors, the latter are to be electrically connected to the switchboard by means of a separate, flexible protective conductor.

1.1.13 All measuring instruments and all monitoring and control devices are to be clearly identified with indelible labels of durable, flame-retardant material.

1.1.14 The rating of each circuit, together with the rating of the fuse or the appropriate setting of the overload protective device (circuit-breaker, thermal relay etc.) for each circuit is to be permanently indicated at the location of the fuse or protective device.

1.1.15 When Busbar Trunking systems are used outside switchboards, IACS Recommendation No.67: Test and Installation of busbar trunking systems may be taken as reference for design, installation and testing.

1.2 Documents to be submitted

1.2.1 Documents showing arrangements and details as indicated in Tab 1 are to be submitted for switchgear and controlgear assemblies.

Table 1 : Documents to be submitted

No.	I/A (1)	Documents to be submitted
1	A	General arrangement drawings (DWGs) including the following details and information: Bill of Materials (BoM), external and internal layout (front view, top view, side elevation) and component placement
2	A	Type and sizes of wiring within the switchboards and controlgear assemblies
3	A	Protective device ratings and settings for internal components
4	A	Bus bar size, clearance, support structure, current rating, and short circuit rating for internal connections
(1) A : To be submitted for approval ; I : To be submitted for information		

1.3 Busbars and bare conductors

1.3.1 Busbars are to be of copper or of copper-surrounded aluminium alloy if suitable for use in the marine environment and if precautions are taken to avoid galvanic corrosion.

1.3.2 All connections are to be so made as to inhibit corrosion.

1.3.3 Busbars are to be dimensioned in accordance with IEC Publication 60092-302.

The mean temperature rise of busbars is not to exceed 45°C under rated current condition with an ambient air temperature of 45°C (see Ch 2, Sec 2, [1.2.2]) and is not to have any harmful effect on adjacent components. Higher values of temperature rise may be accepted to the satisfaction of the Society.

1.3.4 The cross-section of neutral connection on an a.c. three-phase, four-wire system is to be at least 50% of the cross-section for the corresponding phases.

1.3.5 Bare main busbars, excluding the conductors between the main busbars and the supply side of outgoing units, are to have the minimum clearances and creepage distances given in Tab 2. The values shown apply to clearances and creepage distances between live parts as well as between live parts and exposed conductive parts.

Note 1: Clearance is the distance between two conductive parts along a string stretched the shortest way between such parts. Creepage distance is the shortest distance along the surface of an insulating material between two conductive parts.

Table 2 : Clearance and creepage distances

Rated insulation voltage a.c. r.m.s. or d.c., in V	Minimum clearance, in mm	Minimum creepage distance, in mm
≤ 250	15	20
> 250 to ≤ 690	20	25
> 690	25	35

1.3.6 Reduced values as specified in IEC Publication 60092-302 may be accepted for type tested and partially type tested assemblies.

The reference values for the evaluation of the minimum clearances and creepage distances for these assemblies are based on the following:

- pollution degree 3 (conductive pollution occurs, or dry non-conductive pollution occurs which becomes conductive due to condensation which is expected)
- overvoltage category III (distribution circuit level)
- unhomogenous field conditions (case A)
- rated operational voltage 1000 V a.c., 1500 V d.c.
- group of insulating material IIIa.

Special consideration is to be given to equipment located in spaces where a pollution degree higher than 3 is applicable, e.g. in diesel engine rooms.

1.3.7 Busbars and other bare conductors with their supports are to be mechanically dimensioned and fixed such that they can withstand the stresses caused by short-circuits.

Where maximum symmetrical short-circuit currents are expected to exceed 50 kA, calculation is to be submitted to the Society.

1.3.8 Busbars and bare conductors are to be protected, where necessary, against falling objects (e.g. tools, fuses or other objects).

1.4 Internal wiring

1.4.1 Insulated conductors for internal wiring of auxiliary circuits of switchboards are to be constructed in accordance with Ch 2, Sec 9, [2.1.1].

1.4.2 All insulated conductors provided for in [1.4.1] are to be of flexible construction and of the stranded type.

1.4.3 Connections from busbars to protective devices are to be as short as possible. They are to be laid and secured in such a way to minimise the risk of a short-circuit.

1.4.4 All conductors are to be secured to prevent vibration and are to be kept away from sharp edges.

1.4.5 Connections leading to indicating and control instruments or apparatus mounted in doors are to be installed such that they cannot be mechanically damaged due to movement of the doors.

1.4.6 Non-metallic trays for internal wiring of switchboards are to be of flame-retardant material.

1.4.7 Control circuits are to be installed and protected such that they cannot be damaged by arcs from the protective devices.

1.4.8 Where foreseen, fixed terminal connectors for connection of the external cables are to be arranged in readily accessible positions.

1.5 Switchgear and controlgear

1.5.1 Switchgear and controlgear are to comply with IEC Publication 60947 series and to be chosen from among that type approved by the Society.

1.5.2 The characteristics of switchgear, controlgear and protective devices for the various consumers are to be in compliance with Ch 2, Sec 3, [7].

1.6 Auxiliary circuits

1.6.1 Auxiliary circuits are to be designed in such a manner that, as far as practicable, faults in such circuits do not impair the safety of the system. In particular, control circuits are to be designed so as to limit the dangers resulting from a fault between the control circuit and earth (e.g. inadvertent operation or malfunction of a component in the installation), also taking account of the earthing system of their supply.

1.6.2 Auxiliary circuits of essential systems are to be independent of other auxiliary circuits.

1.6.3 Common auxiliary circuits for groups of consumers are permitted only when the failure of one consumer jeopardises the operation of the entire system to which it belongs.

1.6.4 Auxiliary circuits are to be branched off from the main circuit in which the relevant switchgear is used.

1.6.5 The supply of auxiliary circuits by specifically arranged control distribution systems will be specially considered by the Society.

1.6.6 Means are to be provided for isolating the auxiliary circuits as well when the main circuit is isolated (e.g. for maintenance purposes).

1.6.7 For the protection of auxiliary circuits see Ch 2, Sec 3, [7.13].

1.7 Instruments

1.7.1 The upper limit of the scale of every voltmeter is to be not less than 120% of the rated voltage of the circuit in which it is installed.

1.7.2 The upper limit of the scale of every ammeter is to be not less than 130% of the normal rating of the circuit in which it is installed.

1.7.3 The upper limit of the scale of every wattmeter is to be not less than 120% of the rated voltage of the circuit in which it is installed.

1.7.4 Ammeters or wattmeters for use with a.c. generators which may be operated in parallel are to be capable of indicating 15% reverse-current or reverse power, respectively.

1.7.5 For wattmeters using one current circuit only, the measurement of the current of all generators is to be made in the same phase.

1.7.6 The rated value of the measure read, at full load, is to be clearly indicated on the scales of instruments.

1.7.7 Frequency meters are to have a scale at least ± 5% of the nominal frequency.

1.7.8 The secondary windings of instrument transformers are to be earthed.

1.7.9 Each a.c. generator not operated in parallel is to be provided with:

- 1 voltmeter
- 1 frequency meter
- 1 ammeter in each phase or 1 ammeter with a selector switch to enable the current in each phase to be read
- 1 three-phase wattmeter in the case of generators rated more than 50 kVA.

1.7.10 Each a.c. generator operated in parallel is to be provided with:

- 1 three-phase wattmeter
- 1 ammeter in each phase or 1 ammeter with a selector switch to enable the current in each phase to be read.

1.7.11 For paralleling purposes the following are to be provided:

- 2 voltmeters (voltage measurements of each alternator and busbar)
- 2 frequency meters (frequency measurements of each alternator and busbar).

Note 1: As an alternative, a switch may be provided to enable one voltmeter and one frequency meter to be connected to each generator before the latter is connected to the busbars.

The other voltmeter and frequency meter are to be permanently connected to the busbars.

Note 2: Voltmeter and frequencymeter with dual display may be considered.

1.7.12 Each secondary distribution system is to be provided with one voltmeter.

1.7.13 Switchboards are to be fitted with means for monitoring the insulation level of insulated distribution systems as stipulated in Ch 2, Sec 3, [3.2.1].

1.7.14 The main switchboard is to be fitted with a voltmeter or signal lamp indicating that the cable between the shore-connection box and the main switchboard is energised (see Ch 2, Sec 3, [3.7.7]).

1.7.15 For each d.c. power source (e.g. converters, rectifiers and batteries), one voltmeter and one ammeter are to be provided, except for d.c. power sources for starting devices (e.g. starting motor for emergency generator).

1.8 Synchronisation of generators

1.8.1 It is to be possible to synchronise each generator intended for parallel operation with two independent synchronizing devices. at least, one of these synchronizing devices is to be manual.

1.8.2 Provisions are to be made for manual speed control of the prime mover and manual voltage control of the generators at the place where the manual synchronization is carried out.

2 Constructional requirements for section boards and distribution boards

2.1 Construction

2.1.1 Section boards and distribution boards are to be constructed, insofar as applicable, as specified for main and emergency switchboards.

2.1.2 All parts which require operation in normal use are to be placed on the front.

2.1.3 Distribution switchboards which are provided with two or more supply circuits arranged for automatic standby connection are to be provided with positive indication of which of the circuits is feeding the switchboard.

2.1.4 Where switchboard supplying essential services is provided with a forced air cooling system, the air temperature is to be monitored. An alarm is to be activated when temperature exceeds a preset value.

3 Testing

3.1 General

3.1.1 Switchboards and controlgear assemblies are to be subjected to the tests specified from [3.2] to [3.5].

3.1.2 The manufacturer is to issue the relative test reports providing information concerning the construction, serial number and technical data relevant to the switchboard and controlgear assemblies, as well as the results of the tests required.

3.1.3 The tests are to be carried out prior to installation on board.

3.1.4 The test procedures are as specified in IEC Publication 60092-302.

3.1.5 The tests of main switchboards, emergency switchboards or switchboards rated above 100 kW are to be attended by a surveyor of the Society.

3.2 Visual Inspection

3.2.1 It is to be verified that the switchboard and controlgear assemblies:

- complies with the approved drawings
- maintains the prescribed degree of protection
- is constructed in accordance with the relevant constructional requirements, in particular as regards creepage and clearance distances.

3.3 Functional Testing

3.3.1 Electrical functioning tests are to be conducted on switchboard and controlgear assemblies. These tests include, but are not limited to, the testing of control and protective devices, alarms, electrical interlocks, sequence control facilities, and other related components. In certain cases, it may be necessary to perform or repeat these tests following installation on board.

3.3.2 The connections, especially screwed or bolted connections, are to be checked for adequate contact, possibly by random tests.

3.4 High-voltage test

3.4.1 The test is to be performed with alternating voltage at the assembly's rated frequency with a ± 25% tolerance.

3.4.2 The test voltage is to be applied:

- between all live parts connected together and exposed conductive parts
- between each polarity and, all other polarities and exposed conductive parts connected together.

During the high-voltage test, measuring instruments, ancillary apparatus and electronic devices may be disconnected and tested separately in accordance with the appropriate requirements.

3.4.3 The test voltage is to have a substantially sinusoidal waveform, and is not to exceed half of the full test value at the moment of application. It is then to be increased gradually within a few seconds to this full value and maintained for 60 seconds.

3.4.4 The value of the test voltage for main and auxiliary circuits is given in Tab 3 and Tab 4.

3.5 Measurement of insulation resistance

3.5.1 Immediately after the high-voltage test, the insulation resistance is to be measured using a device with a direct current voltage of at least 500 V.

3.5.2 The insulation resistance between all cu.rrent carrying parts and earth (and between each polarity and the other polarities) is to be at least equal to 1 MΩ..

Table 3 : Test voltage for main circuits

Rated insulation voltage Ui, (line to line a.c. or d.c.), in V	Dielectric test voltage a.c. (r.m.s.), in V	Dielectric test voltage d.c., in V
Ui ≤ 60	1000	1415
60 < Ui ≤ 300	1500	2120
300 < Ui ≤ 690	1890	2670
690 < Ui ≤ 800	2000	2830
800 < Ui ≤ 1000	2200	3110
1000 < Ui ≤ 1500	–	3820

Table 4 : Test voltage for auxiliary circuits

Rated insulation voltage Ui, (line to line), in V	Dielectric test voltage a.c. (r.m.s.), in V	Dielectric test voltage d.c., in V
Ui ≤ 12	250	355
12 < Ui ≤ 60	500	710
Ui > 60	see Tab 3	see Tab 3

Section 9 Cables

1 General

1.1 Type approval

1.1.1 Cables are to be of a type approved by the Society.

2 Constructional requirements

2.1 Construction

2.1.1 Cables and insulated wiring are generally to be constructed in accordance with the relevant recommendations of IEC Publications 60092-350, 60092-352, 60092-353, 60092-354, 60092-360, 60092-370 and 60092-376, as well as with the provisions of this Chapter.

2.1.2 Mineral-insulated cables are to be constructed according to IEC Publication 60702.

2.1.3 Optical fibre cables are to be constructed in accordance with IEC Publication 60794.

2.1.4 Cables and insulated wires manufactured and tested in accordance to standards other than those specified in [2.1.1] will be accepted provided they are in accordance with an acceptable and relevant international or national standard and are of an equivalent or higher safety level than those listed in [2.1.1].

However, cables such as flexible cable, fibre-optic cable, etc. used for special purposes may be accepted provided they are manufactured and tested in accordance with the relevant standards accepted by the Society.

2.1.5 Insulated wiring for auxiliary circuits of switchboards may be constituted by cables with a single conductor of the stranded type for all sections, PVC-ST2 or rubber-insulated in accordance with the standards cited in [2.1.1] and without further protection.

2.1.6 The insulated wiring is to be at least of the flame-retardant type according to IEC 60332-1-2:2004 + AMD1:2015.

Switchboard wires, of an equivalent flame-retardant type, will be specially considered by the Society.

2.1.7 In addition to the provisions of Ch 2, Sec 3, [9.1.1], when cables are laid in bunches, cable types are to be chosen in compliance with IEC 60332-3-22:2018 Category A, or other means (see Ch 2, Sec 12, [7.1.4], item b)) are to be provided such as not to impair their original flame-retarding properties.

2.1.8 Where necessary for specific applications such as radio frequency or digital communication systems, which require the use of particular types of cables, the Society may permit the use of cables which do not comply with the provisions of Ch 2, Sec 3, [9.1.1] and with [2.1.7].

2.1.9 Fire resistant cables are to be designed and tested in accordance with the relevant IEC Publication 60092-series standards.

They are to comply with the requirements of:

- IEC Standard 60331-1 for cables with an overall diameter exceeding 20 mm, or
- IEC Standard 60331-2 for cables with an overall diameter not exceeding 20 mm,
- otherwise IEC 60331-21.

The minimum flame application time is to be at least 90 minutes.

Fire resistant type cables are to be easily distinguishable.

Note 1: For special cables, requirements in the following standards may be used:

- IEC 60331-23: Procedures and requirements - Electric data cables
- IEC 60331-25: Procedures and requirements - Optical fibre cables

2.2 Conductors

2.2.1 Conductors are to be of annealed electrolytic copper with a resistivity not exceeding 17,241 Ω mm²/km at 20°C according to IEC 60228.

2.2.2 Individual conductor wires of rubber-insulated cables are to be tinned or coated with a suitable alloy.

2.2.3 All conductors are to be stranded, except for cables of nominal cross-sectional area 2,5 mm² and less (provided that adequate flexibility of the finished cable is assured).

2.2.4 For the minimum nominal cross-sectional areas permitted, see Ch 2, Sec 3, [9.10].

2.3 Insulating materials

2.3.1 The materials used for insulation are to comply with IEC Publication 60092-360 and to have the thicknesses specified for each type of cable in the relevant standard. The maximum permissible rated temperature is specified for the various materials.

2.3.2 Materials and thicknesses other than those in [2.3.1] will be specially considered by the Society.

2.4 Inner covering, fillers and binders

2.4.1 The cores of a multicore cable are to be laid up. The spaces between the cores are to be filled so as to obtain an assembly having an essentially circular cross-section. The filling may be omitted in multicore cables having a conductor cross-sectional area not exceeding 4 mm^2.

2.4.2 When a non-metallic sheath is applied directly over the inner covering or the fillers, it may substitute partially for the inner covering or fillers.

2.5 Protective coverings (armour and sheath)

2.5.1 Metallic armour, if not otherwise protected against corrosion, is to be protected by means of a coating of protective paint (see Ch 2, Sec 3, [9.3]).

2.5.2 The paint is to be non-flammable and of adequate viscosity. When dry, it is not to flake off.

2.5.3 The materials used for sheaths are to be in accordance with IEC Publication 60092-360 and are to have the thicknesses specified for each type of cable in the relevant standard.

The quality of the materials is to be adequate to the service temperature of the cable.

2.5.4 Materials other than those in [2.5.3] will be specially considered by the Society.

2.6 Identification

2.6.1 Each cable is to have clear means of identification so that the manufacturer can be determined.

2.6.2 Fire non propagating cables are to be clearly labelled with indication of the standard according to which this characteristic has been verified and, if applicable, of the category to which they correspond.

3 Testing

3.1 Type tests

3.1.1 Type tests are to be in accordance with the relevant IEC 60092-3. Series Publications and IEC 60332-1, IEC 60332-3 Category A, IEC 60331-1, IEC 60331-2, and IEC 60331-21 where applicable.

3.2 Routine tests

3.2.1 Every length of finished cable is to be subjected to the tests specified in [3.2.2].

3.2.2 The following routine tests are to be carried out:

a) visual inspection

b) check of conductor cross-sectional area by measuring electrical resistance

c) high-voltage test

d) insulation resistance measurement

e) dimensional checks (as necessary).

3.2.3 The manufacturer is to issue a statement providing information on the type and characteristics of the cable, as well as the results of the tests required and the Type Approval Certificates.

3.2.4 The test procedure is as specified in IEC Publication 60092-350.

3.2.5 Where an alternative scheme, e.g. a certified quality assurance system, is recognised by the Society, attendance of the Surveyor may not be required.

Section 10 Miscellaneous Equipment

1 Switchgear and controlgear, protective devices

1.1 General

1.1.1 Switchgear and controlgear are to comply with IEC Publication 60947.

1.1.2 For materials and construction see Ch 2, Sec 2, [4] and Ch 2, Sec 2, [5].

1.2 Circuit-breakers

1.2.1 Power-driven circuit-breakers are to be equipped with an additional separate drive operated by hand.

1.2.2 Power circuit-breakers with a making capacity exceeding 10 kA are to be equipped with a drive which performs the make operation independently of the actuating force and speed.

1.2.3 Where the conditions for closing the circuit-breaker are not satisfied (e.g. if the undervoltage trip is not energised), the closing mechanism is not to cause the closing of the contacts.

1.2.4 All circuit-breakers rated more than 16 A are to be of the trip-free type, i.e. the breaking action initiated by overcurrent or undervoltage releases is to be fulfilled independently of the position of the manual handle or other closing devices.

1.3 Protection devices

1.3.1 Short-circuit releases are generally to be independent of energy supplied from circuits other than that to be protected. Tripping due to short-circuit is to be reliable even in the event of a total loss of voltage in the protected circuit.

1.3.2 Short-circuit releases for generators are to be equipped with reclosing inhibitors and are to be delayed for selective tripping.

1.3.3 Overload releases or relays are to operate reliably at any voltage variation of the supply voltage in the protected circuit.

1.3.4 Undervoltage relays or releases are to cause the circuit-breaker to open if the voltage drops to 70%-35% of the rated voltage.

1.3.5 Shunt releases are to ensure the disconnection of the circuit-breaker even when the supply voltage of the release drops to 85% of the rated supply voltage.

1.3.6 The reverse power protection device is to respond to the active power regardless of the power factor, and is to operate only in the event of reverse power.

1.3.7 Single-phase failure devices in three-phase circuits are to operate without a time lag.

1.3.8 Insulation monitoring devices are to continuously monitor the insulation resistance to earth and trigger an alarm should the insulation resistance fall below a predetermined value.

The measuring current of such devices is not to exceed 30 mA in the event of a total short to earth.

2 Electrical slip ring assemblies

2.1 General requirements

2.1.1 The purpose of the electrical slip ring is to form a continuous electrical connection between a fixed part and a rotating part. The electrical slip rings may transfer power or control/automation signals.

2.1.2 High-voltage electrical slip rings are to be segregated from slip rings operating at different voltage ratings.

2.1.3 Slip rings fitted with forced cooling system are to be capable of restricted operation in case of loss of the cooling system. The cooling system failure is to be alarmed.

2.1.4 Where data transmission is carried out via a bus system, transmission paths are to be duplicated. Failure of each single system is to be alarmed.

2.2 Construction

2.2.1 It is to be taken into account that the mechanical and electrical characteristics of the slip rings can be degraded by contamination or by oxidation.

2.2.2 Enclosures for slip ring assemblies is to ensure at least a degree of protection IP23.

2.2.3 The suitability of used materials at maximum permitted temperature values is to be proven. The permitted conductor temperature values of the connected cables is not to be exceeded.

2.2.4 The maximum temperature rise of external surface parts which can easily be touched in service is not to exceed 15°C.

2.2.5 The enclosure is to be protected against internal condensation.

2.2.6 Clearance and creepage distances between non-insulated parts of low-voltage slip rings are to be in accordance with Ch 2, Sec 8, [1.3.5] and Ch 2, Sec 8, [1.3.6]

2.2.7 Clearance and creepage distances between non-insulated parts of high-voltage slip rings are to be in accordance with Ch 2, Sec 13, [2.3].

2.2.8 Power slip rings are to be capable to withstand without damage the maximum prospective value of the short-circuit current which can occur at its terminals.

2.2.9 High-voltage slip rings are to be able to withstand an internal short circuit arcing failure with the maximum duration and magnitude which can occur at this particular point of the installation, without harmful effect to operators. They are to be internal arc classified (IAC). Where they are accessible by authorized personnel only, Accessibility Type A is sufficient (IEC 62271-200 Annex AA 2.2). Installation and location of the slip rings is to correspond with its internal arc classification and classified sides.

2.3 Testing

2.3.1 General

All slip rings are to be type approved or case-by-case approved and surveyed by the Society during testing and, if appropriate, during manufacturing. Tested slip rings are to be individually certified by the Society.

Electric slip ring assemblies are to be subjected to the tests stated in Tab 1. Where the test procedure is not specified, the requirements of IEC 61439-1 and IEC 61439-2 or IEC 62271-200 apply.

Tests procedure is to be submitted to the Society for approval.

Type tests are to be carried out, unless the manufacturer can produce evidence based on previous experience indicating the satisfactory performance of such equipment.

Table 1 : Tests to be carried out on electrical slip rings

No	Tests	Type test **(1)**	Routine test **(2)**
1	Examination of the technical documentation, as appropriate, and visual inspection **(3)** including check of protection index, clearances and creepage distances	X	X
2	Mechanical tests	X	X
3	Electric contact resistance test	X	X
4	Insulation resistance measurement	X	X
5	Dielectric strength test	X	X
6	Signal attenuation (for fibre optic swivel)	X	X
7	Functional test of auxiliaries (e.g. sensors, data transfer)	X	X
8	Endurance test	X	–
9	Temperature rise test	X	–
10	Impulse voltage withstand test	X	–
11	Short-circuit withstand test	X	–
12	Verification degree of protection	X	–
13	Environmental tests	X	–

(1) Type test on prototype slip ring or test on at least the first batch of slip rings
(2) The certificates of slip rings routine tested are to contain the manufacturer's serial number of the slip ring which has been type tested and the test result
(3) A visual examination is to be made of the slip ring, as far as practicable, that it complies with technical documentation.

2.4 Description of tests

2.4.1 Visual inspection

An inspection and checks are carried out with a view to establish that the electrical slip ring assembly:

- complies with approved technical documentation
- maintains the prescribed degree of protection
- is constructed in accordance with the relevant constructional requirements, in particular as regards to creepage and clearance distances

2.4.2 Mechanical tests

The electrical slip ring is to be subjected to the following mechanical tests:

- Free rotation test on the full 360° in both clockwise and counter-clockwise. No hard point is to be encountered.
- Free rotation test on the full 360° in clockwise and counter-clockwise to measure and record the breakout torque and the steady running torque.
- Free rotation test on the full 360° in clockwise and counter-clockwise when the slip ring is inclined at an angle of 22,5° (roll) to measure and record the breakout torque and the steady running torque.

Tests are to be carried out at the specified rotation speed and the measured values are not to exceed data given by Manufacturer.

2.4.3 Electric contact resistance test

The electrical slip ring is to be subjected to a resistance test to measure and record the contact resistance across all paths on the full 360° in clockwise and counter-clockwise. Test is to be carried out at the specified rotation speed. The measured values are not to exceed the values given by the Manufacturer.

2.4.4 Insulation resistance measurement

Immediately after the high-voltage test, the insulation resistance between all current carrying parts and earth (and between each polarity and the other polarities) is to be measured using a direct current insulation tester. The minimum values of test voltages and corresponding insulation resistances are as given in Ch 2, Sec 4, Tab 2.

2.4.5 Dielectric strength test

Low voltage slip ring assemblies are to be subjected to a high-voltage test as given in Ch 2, Sec 8, [3.3].

High-voltage slip ring assemblies are to be subjected to a high-voltage test:

- between all live parts connected together and exposed conductive parts
- between each polarity and, all other polarities and exposed conductive parts connected together

The test voltage is to be applied for at least 1 minute and is to be as given in Ch 2, Sec 13, Tab 2.

2.4.6 Signal attenuation test (for fibre optic swivel)

The fibre optic swivel is to be subjected to signal attenuation test to measure and record the signal attenuation across all paths on the full 360° in clockwise and counter-clockwise. Test is to be carried out at the specified rotation speed. The measured values are not to exceed the values given by the Manufacturer.

2.4.7 Endurance test

An endurance test at a rotation speed of 1 rpm is to be carried out as follows:

- 100 rotations with 10% rated current (In)
- 100 rotations with 90% rated current (In)
- 1 rotation with 150% rated current (In)
- 100 rotations without current.

After the test, the slip rings electric contact resistance measurement is to be repeated.

2.4.8 Temperature rise test

A temperature rise test is to be carried out to measure the temperature rise of the active parts and the slip ring enclosure when all paths are loaded at their rated current and with normal cooling capability. Test may be performed in static condition. The measured values are not to exceed the values given by the Manufacturer.

2.4.9 Short-circuit withstand test

A short-circuit withstand test is to be performed to demonstrate that active parts with their supports are mechanically dimensioned and fixed to withstand the stresses caused by sudden short-circuit current without damage. The test value is not to be lower than the maximum prospective value of the short-circuit current on the slip ring. A calculation note is admitted as alternative to the test.

2.4.10 Impulse voltage withstand test

An impulse voltage withstand test in accordance with requirements of IEC 61439-1 or IEC 62271-200 is to be carried out in case the air clearance does not satisfy the requirements of [2.2.6] and [2.2.7].

2.4.11 Verification of degree of protection

The degree of protection is to be as specified in IEC 60529.

2.4.12 Environmental tests

To validate that the slip rings assemblies are designed and constructed to operate satisfactorily under the environmental conditions expected on board they are to be subjected to the following environmental tests. During testing the slip rings are to be in normal operating conditions. For large slip rings, a case-by-case evaluation based on calculations and/or documented measures is admitted as an alternative to the vibration test.

a) Ambient temperature test in compliance with IEC 60068-2-2, at temperatures specified in Ch 2, Sec 2, [1.2.1]

b) Humidity resistance test in compliance with IEC 60068-2-30 Test Db, at a relative humidity specified in Ch 2, Sec 2, [1.3.1]

c) Inclination test at inclination angles specified in Ch 2, Sec 2, [1.6.1]

d) Vibration test in compliance with IEC 60068-2-6 Test Fc, at vibration levels specified in Ch 2, Sec 2, [1.7.1].

3 Lighting fittings

3.1 Applicable requirements

3.1.1 Lighting fittings are to comply with IEC Publications 60598 and 60092-306.

Lighting fittings complying with other standards will be specially considered by the Society.

3.2 Construction

3.2.1 The temperature of terminals for connection of supplying cables is not to exceed the maximum conductor temperature permitted for the cable (see Ch 2, Sec 3, [9.9]).

Where necessary, luminaires are to be fitted with terminal boxes which are thermally insulated from the light source.

3.2.2 Wires used for internal connections are to be of a temperature class which corresponds to the maximum temperature within the luminaire.

3.2.3 The temperature rise of parts of luminaires which are in contact with the support is not to exceed 50°C. The rise is not to exceed 40°C for parts in contact with flammable materials.

3.2.4 The temperature rise of surface parts which can easily be touched in service is not to exceed 15°C.

3.2.5 High-power lights with higher surface temperatures than those in [3.2.2] and [3.2.3] are to be adequately protected against accidental contact.

4 Accessories

4.1 Applicable requirements

4.1.1 Accessories are to be constructed in accordance with the relevant IEC Publications, and in particular with Publication 60092-306.

4.2 Construction

4.2.1 Enclosures of accessories are to be of metal having characteristics suitable for the intended use on board, or of flame-retardant insulating material.

4.2.2 Terminals are to be suitable for the connection of stranded conductors, except in the case of rigid conductors for mineral-insulated cables.

5 Plug-and-socket connections

5.1 Applicable requirements

5.1.1 Plug-and-socket connections are to comply with IEC Publication 60092-306 and with the following additional standards in relation to their use:

- in accommodation spaces, day rooms and service rooms (up to 16 A, 250 V a.c.): IEC Publication 60083 or 60320, as applicable
- for power circuits (up to 250 A, 690 V a.c.): IEC Publication 60309
- for electronic switchgear: IEC Publications, e.g. 60512 and 60603
- for refrigerated containers: ISO 1496-2:2018.

6 Heating and cooking appliances

6.1 Applicable requirements

6.1.1 Heating and cooking appliances are to comply with the relevant IEC Publications (e.g. those of series 60335), with particular attention to IEC 60092-307.

6.2 General

6.2.1 Heating elements are to be enclosed and protected with metal or refractory material.

6.2.2 The terminals of the power supply cable are not to be subjected to a higher temperature than that permitted for the conductor of the connection cable.

6.2.3 The temperature of parts which are to be handled in service (switch knobs, operating handles and the like) is not to exceed the following values:

- 55°C for metal parts
- 65°C for vitreous or moulded material.

6.3 Space heaters

6.3.1 The casing or enclosure of heaters is to be so designed that clothing or other flammable material cannot be placed on them.

6.3.2 The temperature of the external surface of space heaters is not to exceed 60°C.

6.3.3 Space heaters are to be provided with a temperature limiting device without automatic reconnection which automatically trips all poles or phases not connected to earth when the temperature exceeds the maximum permissible value.

6.4 Cooking appliances

6.4.1 Live parts of cooking appliances are to be protected such that any foods or liquids which boil over or spill do not cause short-circuits or loss of insulation.

6.5 Fuel oil and lube oil heaters

6.5.1 In continuous-flow fuel oil and lube oil heaters, the maximum temperature of the heating elements is to be below the boiling point of the oil.

6.5.2 Each oil heater is to be provided with a thermostat maintaining the oil temperature at the correct level.

6.5.3 In addition to the thermostat in [6.5.2], each oil heater is to be provided with a temperature limiting device without automatic reconnection, and with the sensing device installed as close as possible to the heating elements and permanently submerged in the liquid.

6.6 Water heaters

6.6.1 Water heaters are to be provided with a thermostat and safety temperature limiter.

Section 11 Location

1 General

1.1 Location

1.1.1 The degree of protection of the enclosures and the environmental categories of the equipment are to be appropriate to the spaces or areas in which they are located; see Ch 2, Sec 3, Tab 2, Ch 2, Sec 3, Tab 3 and Ch 2, Sec 2, [5.2.2].

1.2 Areas with a risk of explosion

1.2.1 Except where the installation of equipment for explosive gas atmosphere is provided for by the Rules, electrical equipment is not to be installed where flammable gases or vapours are liable to accumulate; see Ch 2, Sec 3, [10].

1.3 Electrical equipment in environmentally controlled spaces

1.3.1 Where electrical equipment is installed within environmentally controlled spaces the ambient temperature for which the equipment is to be suitable may be reduced from 45°C to a value not less than 35°C provided:

a) the equipment is not for use for emergency services

b) temperature control is achieved by at least two cooling units so arranged that in the event of loss of one cooling unit, for any reason, the remaining unit(s) is capable of satisfactorily maintaining the design temperature

c) the equipment is able to be initially set to work safely within a 45°C ambient temperature until such a time that the lesser ambient temperature may be achieved; the cooling equipment is to be rated for a 45°C ambient temperature

d) audible and visual alarms are provided, at a continuously manned control station, to indicate any malfunction of the cooling units.

1.3.2 In accepting a lesser ambient temperature than 45°C, it is to be ensured that electrical cables for their entire length are adequately rated for the maximum ambient temperature to which they are exposed along their length.

2 Main electrical system

2.1 Location in relation to the emergency system

2.1.1 The arrangement of the emergency electrical system is to be such that a fire or other casualty in spaces containing the emergency source of electrical power, associated converting equipment, if any, the emergency switchboard and the emergency lighting switchboard will not render inoperative the main electric lighting system and the other primary essential services.

2.2 Main switchboard

2.2.1 *The main switchboard shall be so placed relative to one main generating station that, as far as is practicable, the integrity of the normal electrical supply may be affected only by a fire or other casualty in one space.*

2.2.2 *An environmental enclosure for the main switchboard, such as may be provided by a machinery control room situated within the main boundaries of the space, is not to be considered as separating switchboards from generators.*

2.2.3 The main generating station is to be situated within the machinery space, i.e. within the extreme main transverse watertight bulkheads.

2.2.4 Any bulkhead between the extreme main transverse watertight bulkheads is not regarded as separating the equipment in the main generating station provided that there is access between the spaces.

2.2.5 The main switchboard is to be located as close as practicable to the main generating station, within the same machinery space and the same vertical and horizontal A60 fire boundaries.

2.2.6 Where essential services for steering and propulsion are supplied from section boards, these and any transformers, converters and similar appliances constituting an essential part of the electrical supply system are also to satisfy the above provisions.

2.2.7 A non-required subdivision bulkhead, with sufficient access, located between the switchboard and generators, or between two or more generators, is not to be considered as separating the equipment.

3 Emergency electrical system

3.1 Spaces for the emergency source

3.1.1 *The emergency source of electrical power, associated transforming equipment, if any, transitional source of emergency power, emergency switchboard and emergency lighting switchboard shall be located above the uppermost continuous deck and shall be readily accessible from the open deck.*

They shall not be located forward of the collision bulkhead.

3.1.2 *The spaces containing the emergency source of electrical power, associated transforming equipment, if any, the transitional source of emergency electrical power and the emergency switchboard are not to be contiguous to the boundaries of machinery spaces of Category A or those spaces containing the main source of electrical power, associated transforming equipment, if any, and the main switchboard.*

Where this is not practicable, the contiguous boundaries are to be Class A60.

3.2 Location in relation to the main electrical system

3.2.1 *The location of the emergency source of electrical power, associated transforming equipment, if any, the transitional source of emergency power, the emergency switchboard and the emergency lighting switchboard in relation to the main source of electrical power, associated transforming equipment, if any, and the main switchboard shall be such as to ensure to the satisfaction of the Society that a fire or other casualty in the space containing the main source of electrical power, associated transforming equipment, if any, and the main switchboard or in any machinery space of Category A will not interfere with the supply, control and distribution of emergency electrical power.*

3.2.2 The arrangement of the main electrical system is to be such that a fire or other casualty in spaces containing the main source of electrical power, associated converting equipment, if any, the main switchboard and the main lighting switchboard will not render inoperative the emergency electric lighting system and the other emergency services other than those located within the spaces where the fire or casualty has occurred.

3.3 Emergency switchboard

3.3.1 *The emergency switchboard shall be installed as near as is practicable to the emergency source of electrical power.*

3.3.2 *Where the emergency source of electrical power is a generator, the emergency switchboard shall be located in the same space unless the operation of the emergency switchboard would thereby be impaired.*

3.4 Emergency battery

3.4.1 *No accumulator battery fitted in accordance with the provisions of* Ch 2, Sec 3, [2.3] *shall be installed in the same space as the emergency switchboard.*

3.4.2 For ships not subject to Solas, accumulator batteries fitted in accordance with the provisions of Ch 2, Sec 3, [2.3] and connected to a charging device of power of 2 kW or less may be accepted in the same space as the emergency switchboard but outside the emergency switchboard to the satisfaction of the Society.

4 Distribution boards

4.1 Distribution boards for cargo spaces and similar spaces

4.1.1 Distribution boards containing multipole switches for the control of power and lighting circuits in bunkers and cargo spaces are to be situated outside such spaces.

4.2 Distribution board for navigation lights

4.2.1 The distribution board for navigation lights is to be placed in an accessible position on the bridge.

5 Cable runs

5.1 General

5.1.1 Cable runs are to be selected so as to be as far as practicable accessible, with the exception of single cables, situated behind walls or ceilings constructed of incombustible materials, supplying lighting fittings and socket-outlets in accommodation spaces, or cables enclosed in pipes or conduits for installation purposes.

5.1.2 Cable runs are to be selected so as to avoid action from condensed moisture and from dripping of liquids.

5.1.3 Connection and draw boxes are to be accessible.

5.1.4 Cables are generally not to be installed across expansion joints.

Where this is unavoidable, however, a loop of cable of length proportional to the expansion of the joint is to be provided (see Ch 2, Sec 12, [7.2.2]).

5.2 Location of cables in relation to the risk of fire and overheating

5.2.1 Cables and wiring serving essential or emergency power, lighting, internal communications or signals are, so far as is practicable, to be routed clear of galleys, laundries, machinery spaces of Category A and their casings and other high fire risk areas, except for supplying equipment in those spaces.

5.2.2 When it is essential that a circuit functions for some time during a fire and it is unavoidable to carry the cable for such a circuit through a high fire risk area (e.g. cables connecting fire pumps to the emergency switchboard), the cable is to be of a fire-resistant type or adequately protected against direct exposure to fire.

5.2.3 The electrical cables to the emergency fire pump are not to pass through the machinery spaces containing the main fire pumps and their source(s) of power and prime mover(s).

They are to be of a fire resistant type, in accordance with Ch 2, Sec 9, [2.1.9], where they pass through other high fire risk areas.

5.2.4 Main cable runs (see Note 1) and cables for the supply and control of essential services are, as far as is practicable, to be kept away from machinery parts having an increased fire risk (see Note 2) unless:

- the cables have to be connected to the subject equipment
- the cables are protected by a steel bulkhead or deck, or
- the cables in that area are of the fire-resisting type.

Note 1: Main cable runs are for example:

- cable runs from generators and propulsion motors to main and emergency switchboards
- cable runs directly above or below main and emergency switchboards, centralised motor starter panels, section boards and centralised control panels for propulsion and essential auxiliaries.

Note 2: Machinery, machinery parts or equipment handling combustibles are considered to present an increased fire risk.

5.2.5 Cables and wiring serving essential or emergency power, lighting, internal communications or signals are to be arranged, as far as practicable, in such a manner as to preclude their being rendered unserviceable by heating of the bulkheads that may be caused by a fire in an adjacent space.

5.2.6 Cables are to be arranged as remote as possible from sources of heat such as hot pipes, resistors, etc. Where installation of cables near heat sources cannot be avoided, and where there is consequently a risk of damage to the cables by heat, suitable shields are to be installed, or other precautions to avoid overheating are to be taken, for example use of ventilation, heat insulation materials or special heat-resisting cables.

5.3 Location of cables in relation to electromagnetic interference

5.3.1 For the installation of cables in the vicinity of radio equipment or of cables belonging to electronic control and monitoring systems, steps are to be taken in order to limit the effects of unwanted electromagnetic interference (see Ch 3, Sec 5).

5.4 Services with a duplicate feeder

5.4.1 In the case of essential services requiring a duplicate supply (e.g. steering gear circuits), the supply and associated control cables are to follow different routes which are to be as far apart as practicable, separated both vertically and horizontally.

5.5 Emergency circuits

5.5.1 Cables supplying emergency circuits are not to run through spaces containing the main source of electrical power, associated transforming equipment, if any, the main switchboard and the main lighting switchboard, except for cables supplying emergency equipment located within such spaces (see [3.2.2]).

5.6 Electrical distribution in passenger ships

5.6.1 For the electrical distribution in passenger ships, see Pt D, Ch 11, Sec 5, [1.2].

6 Storage batteries

6.1 General requirements for arrangements

6.1.1 Batteries are to be located where they are not exposed to excessive heat, extreme cold, spray, steam or other conditions which would impair performance or accelerate deterioration. They are to be installed in such a way that no damage may be caused to surrounding appliances by the vapours generated.

6.1.2 Storage batteries are to be suitably housed, and compartments (rooms, lockers or boxes) used primarily for their accommodation are to be properly constructed and efficiently ventilated so as to prevent accumulation of flammable gas.

6.1.3 Starter batteries are to be located as close as practicable to the engine or engines served.

6.1.4 *Accumulator batteries shall not be located in sleeping quarters except where hermetically sealed to the satisfaction of the Society.*

6.1.5 Lead-acid batteries and alkaline batteries are not to be installed in the same compartment (room, locker, box), unless of valve-regulated sealed type.

6.1.6 Protection against water entry in battery compartment

Means are to be provided to avoid sea water ingress in battery compartment under normal operating conditions.

6.1.7 Protection against liquid leakage in battery compartment

The piping systems not involved in battery operation are not to be located in the battery compartment. Departure from this requirement may be accepted by the Society, with the following minimum conditions

- efficient detection of fluid leakage is implemented in compartment
- pipes are provided with welded joints inside the battery compartment and are not to be installed above the battery packs
- no flammable fluid is conveyed
- only class III pipes are accepted.

6.1.8 Protection against falling objects

Access hatches to batteries are to prevent falling of objects directly on battery cells, connections, elements of BMS, and cooling system if any.

6.1.9 Protection against electrostatic hazard

When hazardous areas may be created regarding criteria of IEC 60079 series, the battery room is to be painted with antistatic paintings in the circulating area with the exception of battery rooms containing Li ion batteries provided it is confirmed by the risk analysis required in Ch 2, Sec 7, [3.2.1]; Ch 2, Sec 7, [5.4.2] or Ch 2, Sec 12, [5.2.1].

6.1.10 The charging device power mentioned in [6.2] to [6.4] is to be taken equal to the product from the maximum obtainable charging current and the nominal voltage of battery. When several charging devices are used in one location, the sum of each individual charging device power is to be considered to determine which provisions are applicable.

6.2 Arrangement of large vented batteries

6.2.1 Batteries connected to a charging device of power exceeding 2 kW (hereafter referred to as “large batteries”) are to be installed in a room assigned to batteries only. Where this is not possible, they may be arranged in a suitable locker on deck.

Where this is not possible, they may be arranged in a suitable locker on deck.

6.2.2 Rooms assigned to large batteries are to be provided with mechanical exhaust ventilation.

Natural ventilation may be employed for boxes located on open deck.

6.3 Arrangement of moderate vented batteries

6.3.1 Batteries connected to a charging device of power between 0,2 kW and 2 kW (hereafter referred to as “moderate batteries”) are to be placed in a box or locker in suitable locations such as machinery spaces, storerooms or similar spaces. In machinery spaces and similar well-ventilated compartments, these batteries may be installed without a box or locker provided they are protected from falling objects, dripping water and condensation where necessary. An arrangement complying with [6.2] is also acceptable

6.3.2 Rooms, lockers or boxes assigned to moderate batteries are to be provided with natural ventilation or mechanical exhaust ventilation, except for batteries installed without a box or locker (located open) in well-ventilated spaces.

6.4 Arrangement of small vented batteries

6.4.1 Batteries connected to a charging device of power less than 0,2 kW (hereafter referred to as “small batteries”) are to be arranged in a box in a ventilated area or without a box or locker, provided they are protected from falling objects.

6.4.2 Boxes for small batteries may be ventilated only by means of openings near the top to permit escape of gas.

6.5 Arrangement of Li-ion batteries above 20kWh

6.5.1 Batteries are to be installed in a dedicated space that is not located forward of the collision bulkhead.

6.5.2 Fire protection

a) For structural fire protection, see Ch 4, Sec 5, [1].

b) For detection and alarm, see Ch 4, Sec 3, [9].

c) For fire fighting, see Ch 4, Sec 6, [8].

6.6 General requirements for ventilation

6.6.1 The ventilation of battery compartments is to be independent of ventilation systems for other spaces.

6.6.2 Fans starters cabinet is to be located outside of the energy electric storage system (ESS) room.

6.6.3 In the event of failure of the remote or automatic control system, it is to be possible to start/stop the ESS ventilation locally without entering the ESS space.

6.6.4 Ventilation fans are not to produce a source of vapor ignition in either the ventilated space or the ventilation system associated with the space. A non-sparking exhaust fan is to be provided.

6.6.5 Ducts are to be made of a corrosion-resisting material or their interior surfaces are to be painted with corrosion-resistant paint.

6.6.6 The ventilation ducting system is to be gastight and able to withstand the off-gas temperature and over-pressure. The pipes to and from the battery room are to be made of steel.

6.6.7 Adequate air inlets (whether connected to ducts or not) are to be provided near the floor of battery rooms or the bottom of lockers or boxes (except for that of small batteries).

Air inlet may be from the open air or, when in lockers and boxes, from another space.

Ventilation air inlets are to be taken from areas which, in the absence of the considered inlet, would be non-hazardous.

6.6.8 The ventilation exhaust suction is to be located as close as practicable to the ceiling such that light gases are evacuated.

6.6.9 Exhaust ducts of natural ventilation systems:

a) are to be run directly from the top of the compartment to the open air above (they may terminate in the open or in well-ventilated spaces)

b) are to terminate not less than 90 cm above the top of the battery compartment

c) are to have no part more than 45° from the vertical

d) are not to contain appliances (for example for barring flames) which may impede the free passage of air or gas mixtures.

Where natural ventilation is impracticable or insufficient, mechanical exhaust ventilation is to be provided.

6.6.10 Mechanical exhaust ventilation systems

a) electric motors for ventilation fans are not to be located in ventilation ducts for hazardous spaces unless the motor is certified for the same hazard zone as the space served

b) fans are to be so constructed and of a material such as to render sparking impossible in the event of the impeller touching the fan casing

c) steel or aluminium impellers are not to be used

d) the system is to be interlocked with the charging device so that the battery cannot be charged without ventilation (trickle charge may be maintained)

e) a temperature sensor is to be located in the battery compartment to monitor the correct behaviour of the battery in cases where the battery element is sensitive to temperature.

6.6.11 Natural ventilation systems for deck boxes

a) holes for air inlet are to be provided on at least two opposite sides of the box

b) the exhaust duct is to be of ample dimensions

c) the duct is to terminate at least 1,25 m above the box in a goose-neck or mushroom-head or the equivalent

d) the degree of protection is to be in accordance with Ch 2, Sec 3, Tab 2.

6.7 Additional requirement for vented batteries ventilation

6.7.1 The quantity of air expelled (by natural or forced ventilation) for compartments containing vented type batteries is to be at least equal to:

$Q = 110\ I\ n$

where:

Q : Quantity of air expelled, in litres per hour

I : Maximum current delivered by the charging equipment during gas formation, but not less than one quarter of the maximum obtainable charging current in amperes

n : Number of cells in series.

For natural ventilation, the available inlet and outlet duct free cross-sectional area S, in mm² is deemed sufficient provided it complies with following criteria:

$S \geq 2,8\ Q$

Otherwise, the dimensioning of the natural ventilation is to be considered on a case-by-case basis depending on the actual ducting arrangement. Detailed calculations may be required for this purpose.

6.8 Additional requirement for valve regulated batteries ventilation

6.8.1 The quantity of air expelled (by natural or forced ventilation) for compartments containing valve-regulated sealed batteries is to be at least 25% of that given in [6.7.1].

6.9 Additional requirement for Li-Ion batteries above 20kWh ventilation

6.9.1 The quantity of air expelled (by natural or forced ventilation) is to be at least equal to 6 air changes per hour.

6.9.2 The power supplied to the ESS ventilation fans is to be provided from two alternative circuits; one of which is the main power source and the other is the emergency source. The supply circuits are to be managed through a change-over switch.

6.9.3 When toxic products may be emitted in normal or abnormal conditions of operation, a specific analysis is to be undertaken (see Ch 2, Sec 7, [5.4.2]).

Note 1: The risk of release of toxic or explosive gases is to be assessed based on the gas analysis performed during the battery pack prototype testing, as required by Ch 2, Sec 7, [1.7.2].

6.9.4 For systems where potential off-gases are ventilated directly into the ESS space:

- A non-sparking exhaust fan is to be provided, producing under-pressure in the ESS space
- The exhaust fan is to be continuously running (or is to start automatically upon off-gas detection).

6.9.5 For systems equipped with an integrated duct for potential off-gas ventilation:

- An inlet fan is to be provided, producing over-pressure in the ESS space
- The inlet fan is to be continuously running or is to start automatically upon off-gas detection.
- The integrated duct's inlets are to be equipped with non-return valves or flaps
- The integrated off-gas duct fan is to be continuously running or is to start automatically upon off-gas detection
- The integrated off-gas ventilation is not to be equipped with fire dampers

6.9.6 A specific detection should be implemented, in order to monitor:

- negative pressure of the room
- ventilation air flow
- explosive or inflammable gas concentration. Detectors are to be positioned regarding air streams repartition in the battery room and compartment, if any.
- position of ventilation circuit valves.

6.10 Hazardous area classification

6.10.1 Hazardous area classification is to be in accordance with Ch 2, Sec 3, [10.6].

Section 12 Installation

1 General

1.1 Protection against injury or damage caused by electrical equipment

1.1.1 All electrical equipment is to be so installed as not to cause injury when handled or touched in the normal manner.

1.1.2 All electrical equipment is to be installed in such a way that live parts cannot be inadvertently touched, unless supplied at a safety voltage.

1.1.3 For protective earthing as a precaution against indirect contact, see Article [2].

1.1.4 Equipment is to be installed so as not to cause, or at least so as to reduce to a minimum, electromagnetic interference.

1.2 Protection against damage to electrical equipment

1.2.1 Electrical equipment is to be so placed that as far as practicable it is not exposed to risk of damage from water, steam, oil or oil vapours.

1.2.2 The air supply for internal ventilation of electrical equipment is to be as clean and dry as practicable; cooling air for internal ventilation is not to be drawn from below the floor plates in engine and/or boiler rooms.

1.2.3 Equipment is to be so mounted that its enclosing arrangements and the functioning of the built-in equipment will not be affected by distortions, vibrations and movements of the ship's structure or by other damage liable to occur.

1.2.4 If electrical fittings, not of aluminium, are attached to aluminium, suitable provision is to be made to prevent galvanic corrosion.

1.3 Accessibility

1.3.1 Equipment is to be so installed that sufficient space is available for inspection and maintenance as required for all its parts (see [6.1.3]).

2 Earthing of non-current carrying parts

2.1 Parts which are to be earthed

2.1.1 Exposed metal parts of both fixed and portable electrical machines or equipment which are not intended to be live but which are liable under fault conditions to become live and similar metal parts inside non-metallic enclosures are to be permanently earthed through separate conductors of earthing straps, securely attached, and protected against damage unless the machines or equipment are:

a) supplied at a voltage not exceeding 50 V direct current or 50 V, root mean square between conductors, achieved without the use of auto-transformers (safety voltage); or

b) supplied at a voltage not exceeding 250 V by safety isolating transformers supplying one consuming device only; or

c) constructed in accordance with the principle of double insulation.

2.1.2 Special consideration is to be given to the earthing of the non-current- carrying parts which are not accessible but which under fault conditions might become live and hence constitute a fire hazard, such as a metal junction-box mounted on a wooden panel.

2.1.3 To minimise shock from high frequency voltage induced by the radio transmitter, handles, handrails and other metal elements on the bridge or upper decks are to be in electrical connection with the hull or superstructures.

2.2 Methods of earthing

2.2.1 Metal frames or enclosures of apparatus and electrical machinery may be fixed to, and in metallic contact with, the ship's structure, provided that the surfaces in contact are clean and free from rust, scale or paint when installed and are firmly bolted together.

2.2.2 For metal frames or enclosures which are not earthed as specified in [2.2.1], earthing connections complying with [2.3] and [2.4] are to be used.

2.2.3 For requirements regarding the earthing of coverings of cables and the mechanical protection of cables, see [7.11] and [7.12].

2.3 Earthing connections

2.3.1 Every earthing connection is to be of copper or other corrosion-resistant material and is to be securely installed and protected, where necessary, against damage and electrolytic corrosion.

2.3.2 The nominal cross-sectional area of each copper earthing connection is to be not less than that required in Tab 1. Earthing connections of other metals are to have conductance at least equal to that specified for a copper earthing connection.

2.3.3 Metal parts of portable appliances are to be earthed, where required (see [2.1.1]), by means of an earth-continuity conductor in the flexible supply cable or cord, which has the cross-sectional area specified in Tab 1 and which is earthed, for example, through the associated plug and socket.

2.3.4 In no circumstances is the lead sheathing or armour of cables to be relied upon as the sole means of earthing.

Table 1 : Cross-sectional area of earth-continuity conductors and earthing connections

<table>
<tr><th colspan="2">Type of earthing connection</th><th>Cross-sectional area of associated current carrying conductor</th><th colspan="2">Minimum cross-sectional area of copper earthing connection</th></tr>
<tr><td>1</td><td>Earth-continuity conductor in flexible cable or flexible cord</td><td>any</td><td colspan="2">Same as current carrying conductor up to and including 16 mm² and one half above 16 mm² but at least 16 mm²</td></tr>
<tr><td rowspan="3">2</td><td rowspan="3">Earth-continuity conductor incorporated in fixed cable</td><td rowspan="3">any</td><td colspan="2">a) for cables having an insulated earth-continuity conductor
• a cross-section equal to the main conductors up to and including 16 mm², but minimum 1,5 mm²
• a cross-section not less than 50% of the cross-section of the main conductor when the latter is more than 16 mm², but at least 16 mm²
b) for cables with a bare earth wire in direct contact with the lead sheath</td></tr>
<tr><td>Cross-section of main conductor, in mm²</td><td>Earthing connection, in mm²</td></tr>
<tr><td>1 to 2,5 mm²
4 to 6 mm²</td><td>1
1,5</td></tr>
<tr><td rowspan="3">3</td><td rowspan="3">Separate fixed earthing conductor</td><td>≤ 3 mm²</td><td colspan="2">Same as current carrying conductor subject to minimum of 3 mm² for stranded earthing connection or 2,5 mm² for unstranded earthing connection</td></tr>
<tr><td>> 3 mm² but ≤ 125 mm²</td><td colspan="2">One half the cross-sectional area of the current carrying conductor, subjected to a minimum of 3 mm²</td></tr>
<tr><td>> 125 mm²</td><td colspan="2">64 mm²</td></tr>
</table>

2.4 Connection to the ship's structure

2.4.1 Every connection of an earth-continuity conductor or earthing lead to the ship's structure is to be secured by means of a screw of brass or other corrosion-resistant material of diameter not less than 6 mm.

2.4.2 Such earthing connection is not to be used for other purposes.

2.4.3 The connection described in [2.4.1] is to be located in an accessible position where it may readily be checked.

2.5 Earthed distribution systems

2.5.1 The system earthing of earthed distribution systems is to be effected by means independent of any earthing arrangements of non-current carrying parts and is to be connected to the hull at one point only.

2.5.2 All earthing impedances are to be connected to the hull. The connection to the hull is to be so arranged that any circulating currents in the earth connections do not interfere with radio, radar, communication and control equipment circuits.

2.5.3 In an earthed distribution system in which the earthing connection does not normally carry current, this connection is to conform with the requirements of [2.3], except that the lower limit of 70 mm² does not apply (see Tab 1).

2.5.4 In a distribution system with hull return, the system earthing connection is to have at least the same cross-sectional area as the feeder lines.

2.5.5 The earthing connection is to be in an accessible position where it may readily be inspected and disconnected for insulation testing.

2.6 Aluminium superstructures

2.6.1 When aluminium superstructures are insulated from the steel hull to prevent electrolytic corrosion, they are to be secured to the hull by means of a separate bonding connection.

2.6.2 The connections are to be adequately close together and are to have a resistance less than 0,1 Ω.

2.6.3 The connections are to be located where they may readily be inspected.

3 Rotating machines

3.1

3.1.1 Every rotating machine is preferably to be installed with the shaft in the fore-and-aft direction. Where a rotating machine of 100 kW (kVA) and over is installed athwartship, or vertically, it is to be ensured that the design of the bearings and the arrangements for lubrication are satisfactory to withstand the rolling specified in Ch 2, Sec 2, Tab 4.

4 Semiconductor converters

4.1 Semiconductor power converters

4.1.1 Naturally air-cooled semiconductor converters are to be installed such that the circulation of air to and from the stacks or enclosures is not impeded and that the temperature of the cooling inlet air to converter stacks does not exceed the ambient temperature for which the stacks are specified.

5 Batteries

5.1 Vented batteries

5.1.1 Batteries are to be arranged so that each cell or crate of cells is accessible from the top and at least one side to permit replacement and periodical maintenance.

5.1.2 Cells or crates are to be carried on insulating supports of material non-absorbent to the electrolyte (e.g. treated wood).

5.1.3 Cells are to be securely chocked by means of insulating material non-absorbent to the electrolyte, e.g. strips of treated wood. Special mechanical precautions are to be taken to prevent the emergency battery from being damaged by the shock due to a collision.

5.1.4 Provision is to be made for the free circulation of air.

5.1.5 Protection against corrosion

a) The interior of battery compartments (rooms, lockers, boxes) including all metal parts subject to the electrolyte is to be protected against the deteriorating effect of the latter by electrolyte-resistant coating or other equivalent means, unless corrosion-resistant materials are used.

b) Interior surfaces of metal shelves for battery cells, whether or not grouped in crates or trays, are to be protected by a lining of electrolyte-resistant material, watertight and carried up to at least 75 mm on all sides. In particular, linings are to have a minimum thickness of 1,5 mm, if of lead sheet for lead-acid batteries, and of 0,8 mm, if of steel for alkaline batteries.

   Alternatively, the floor of the room or locker is to be lined as specified above to a height of at least 150 mm.

c) Battery boxes are to be lined in accordance with the requirements of item b) to a height of at least 75 mm.

5.2 Li Ion batteries above 20kWh

5.2.1 Risk analysis

A risk analysis is to be conducted and submitted to the Society.

An HAZID study is to be carried out for battery system installation. It is to cover at least the following spaces, zones and systems:

- Battery Room (Location and adjacent spaces)
- Battery system and auxiliaries
- An additional vibration analysis of the battery system may be required, taking into account the type of ship and its operational activity.

The risks identified by the HAZID study may be mitigated by operational procedures.

The following risks, at least, are to be covered:

- risk of thermal runaway
- risk of emission of combustion gases
- risk of internal short-circuit
- risk of external short-circuit
- risk of sensor failure (voltage, temperature, gas sensor)
- risk of high impedance (cell, connectors)
- risk of loss of cooling
- risk of leakage (electrolyte, cooling system)
- risk of failure of BMS (error on manoeuvring breakers, overloading, over discharge)
- risk for external ingress (fire, fluid leakage, fire-fighting water).

Adequation of fire-extinguishing system to battery type is to be documented.

Appropriate alarms and shutdown are to be described (for example, default on the cooling system when necessary to proper operation of the battery system).

6 Switchgear and controlgear assemblies

6.1 Main switchboard

6.1.1 The main switchboard is to be so arranged as to give easy access as may be needed to apparatus and equipment, without danger to personnel.

6.1.2 An unobstructed space is to be left in front of the switchboard wide enough to allow access for operation; such width is generally about 1 metre.

When withdrawable equipment is contained in the switchboard, the width of the space is to be not less than 0,5 m when the equipment is fully withdrawn.

Reduced widths may be considered for small ships.

6.1.3 Where necessary, an unobstructed space is to be provided at the rear of the switchboard ample to permit maintenance; in general, the width of this passage is to be not less than 0,6 m, except that this may be reduced to 0,5 m in way of stiffeners and frames, and the height sufficient for the operation foreseen.

6.1.4 Where the switchboard is open at the rear, the rear space in [6.1.3] is to form a locked space provided at each end with an access door. The required IP protection for the corresponding location is to be fulfilled.

6.1.5 If necessary, the clear height above the switchboard specified by the manufacturer is to be maintained for pressure relief in the event of a short-circuit.

6.1.6 When the voltage exceeds the safety voltage, non-conducting mats or gratings are to be provided at the front and rear of the switchboard as necessary.

6.1.7 Piping and conduits are not to be installed directly above or in the vicinity of switchboards.

Where this is unavoidable, pipes and conduits are to have welded joints only or to be provided with protection against spray from steam or pressurised liquids or dripping.

6.2 Emergency switchboard

6.2.1 For the installation of the emergency switchboard, the same requirements apply as given in [6.1] for the installation of the main switchboard.

6.3 Section boards and distribution boards

6.3.1 For the installation of section and distribution boards, the same requirements apply, as far as applicable, as given in [6.1] for the installation of the main switchboard.

7 Cables

7.1 General

7.1.1 Cables having insulating materials with different maximum permissible conductor temperatures are not to be bunched together.

Where this is not practicable, the cables are to be so installed that no cable reaches a temperature higher than its rating.

7.1.2 Cables having a protective covering which may damage the covering of more vulnerable cables are not to be bunched with the latter.

7.1.3 Cables having a bare metallic sheath (e.g. of copper) or braid or armour are to be installed in such a way that galvanic corrosion by contact with other metals is prevented.

7.1.4 All cables and wiring external to equipment are to be so installed as not to impair their original flame-retarding properties. To this end, the following methods may be used:

a) the use of cables in accordance with Ch 2, Sec 9, [2.1.7] or an equivalent standard for cables installed in bunches, or

b) the use of fire stops having at least B-0 penetrations fitted as follows (see Fig 1, Fig 2, Fig 3 and Fig 4):
   - cable entries at the main and emergency switchboard
   - where cables enter engine control rooms
   - cable entries at centralised control panels for propulsion machinery and essential auxiliaries
   - at each end of totally enclosed cable trunks
   - every second deck or approximately 6 metres for vertical runs and every 14 metres for horizontal runs in enclosed and semi-enclosed spaces
   - at the boundaries of the spaces in cargo areas.

The cable penetrations are to be installed in steel plates of at least 3 mm thickness extending all around to twice the largest dimension of the cable run for vertical runs and once for horizontal runs, but need not extend through ceilings, decks, bulkheads or solid sides of trunks. In addition, for cables installed in enclosed and semi-enclosed spaces, a fire protection coating is to be applied at least 1 metre in every 14 metres on horizontal cable runs and over the entire length of vertical cable runs.

These precautions apply in particular to bunches of 5 or more cables in areas with a high fire risk (such as Category A machinery spaces, galleys etc.) and to bunches of more than 10 cables in other areas.

Figure 1 : Totally enclosed trunks

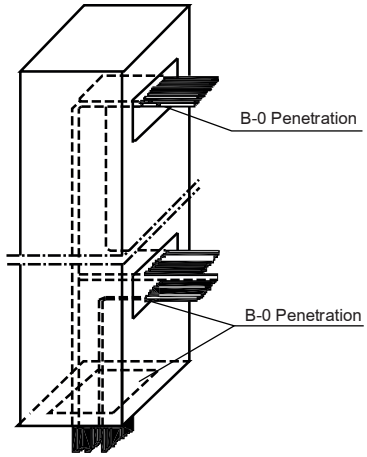

Figure 2 : Non-totally enclosed trunks, vertical

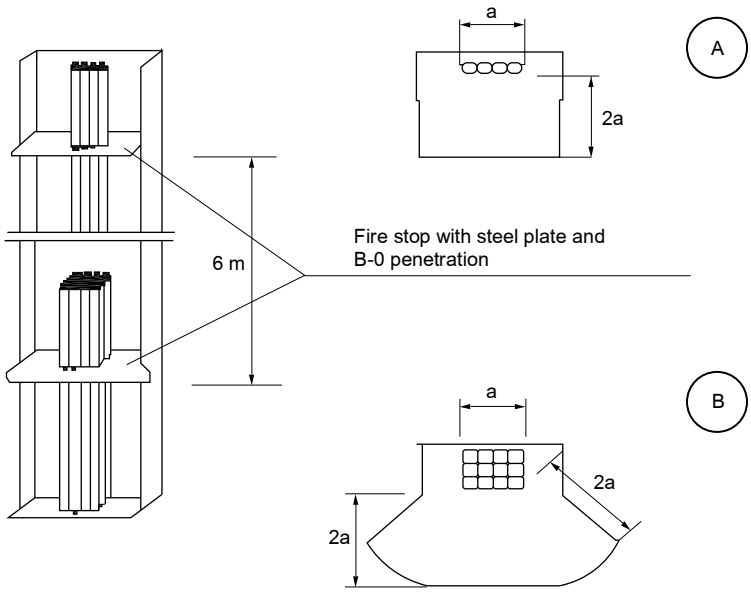

Figure 3 : Non-totally enclosed trunks, horizontal

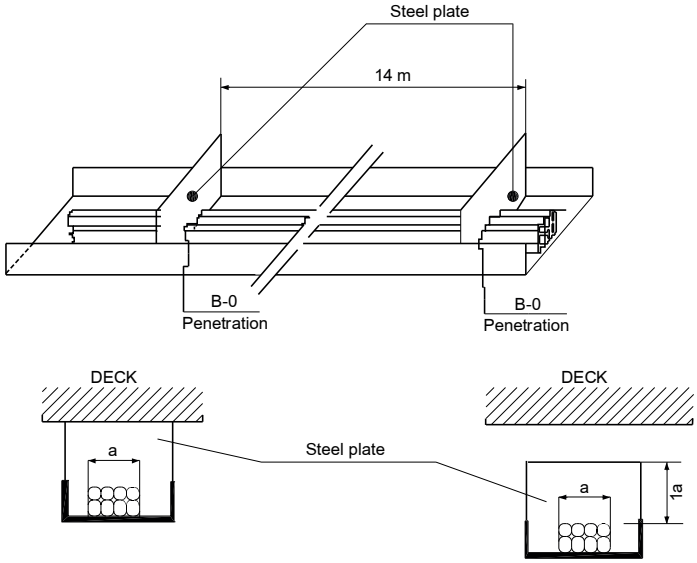

Figure 4 : Open cables runs

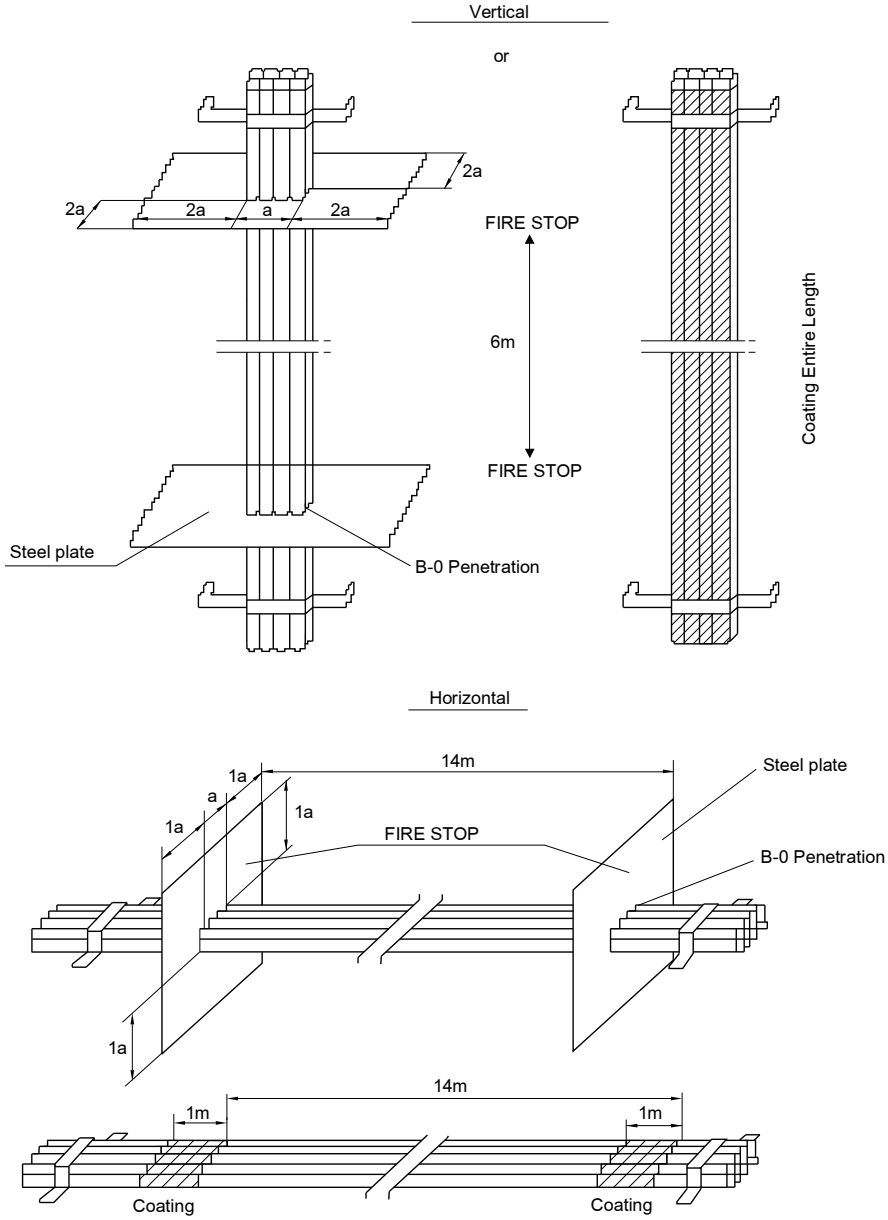

7.2 Radius of bend

7.2.1 The internal radius of bend for the installation of cables is to be chosen according to the type of cable as recommended by the manufacturer.

Its value is generally to be not less than the figure given in Tab 2.

7.2.2 Where the installation of cables across expansion joints is unavoidable, the minimum internal radius of the loop at the end of the travel of the expansion joint is to be not less than 12 times the external diameter of the cable.

Table 2 : Bending radii

Cable construction		Overall diameter of cable (D)	Minimum internal radius of bend
Insulation	Outer covering		
Thermoplastic or thermosetting with circular copper conductors	Unarmoured or unbraided	≤ 25 mm	4 D
		> 25 mm	6 D
	Metal braid screened or armoured	Any	6 D
	Metal wire armoured Metal tape armoured or metal-sheathed	Any	6 D
	Composite polyester/metal laminate tape screened units or collective tape screening	Any	8 D
Thermoplastic or thermosetting with shaped copper conductors	Any	Any	8 D

7.3 Fixing of cables

7.3.1 *Cables shall be installed and supported in such a manner as to avoid chafing or other damage.*

7.3.2 The supports (tray plates, separate support brackets or hanger ladders) and the corresponding accessories are to be of robust construction and of corrosion-resistant material or suitably treated before erection to resist corrosion.

When cables are installed directly on aluminium structures, fixing devices of aluminium or suitably treated steel are to be used.

For mineral-insulated cables with copper sheath, fixing devices in contact with the sheath are to be of copper alloy.

7.3.3 With the exception of cables installed in pipes, conduits, trunkings or special casings, cables are to be fixed by means of clips, saddles or straps of suitable material, in order to tighten the cables without their coverings being damaged.

7.3.4 Cable clips or straps made from a material other than metal are to be manufactured of a flame-retardant material.

7.3.5 The distances between fastenings and between supports are to be suitably chosen according to the type and number of cables and the probability of vibration.

7.3.6 When cables are fixed by means of clips or straps made from a material other than metal and these cables are not laid on top of horizontal cable supports (e.g. in the case of vertical installation or suspended cables), suitable metal clips or saddles spaced not more than 2 m apart are to be used in addition in order to prevent the release of cables during a fire.

7.4 Mechanical protection

7.4.1 Cables exposed to risk of mechanical damage are to be protected by metal casing, profiles or grids or enclosed in metal pipes or conduits, unless the cable covering (e.g. armour or sheath) provides adequate mechanical protection.

7.4.2 In situations where there would be an exceptional risk of mechanical damage, e.g. in holds, storage spaces, cargo spaces, etc., cables are to be protected by metal casing, trunkings or conduits, even when armoured, if the ship's structure or attached parts do not afford sufficient protection for the cables.

7.4.3 For the protection of cables passing through decks, see [7.5.3].

7.4.4 Metal casing used for mechanical protection of cables is to be effectively protected against corrosion.

7.5 Penetrations of bulkheads and decks

7.5.1 If cables have to pass without adequate support through non-watertight bulkheads and generally through holes drilled in sheets of structural steel, these holes are to be fitted with glands or bushings of suitable material.

7.5.2 If cables have to pass through a watertight bulkhead or deck, the penetration is to be effected in a watertight manner.

Either suitable individual watertight glands for single cables or boxes containing several cables and filled with a flame-retardant packing may be used for this purpose.

Whichever type of penetration is used, the watertight integrity of the bulkheads or deck is to be maintained.

7.5.3 Cables passing through decks and continuing vertically are to be protected against mechanical damage from deck penetration. All burrs and sharp edges are to be removed in way of the penetration.

Additional mechanical protection is to be provided to a suitable height above deck where the cables are exposed to the risk of mechanical damage.

7.5.4 Where cables pass through bulkheads or decks separating areas with a risk of explosion, arrangements are to be such that hazardous gas or dust cannot penetrate through openings for the passage of cables into other areas.

7.5.5 Where cables pass through a bulkhead or deck which is required to have some degree of fire integrity, penetration is to be so effected as to ensure that the required degree of fire integrity is not impaired.

7.6 Expansion joints

7.6.1 If there is reason to fear that a tray plate, pipe or conduit may break because of the motion of the ship, different load conditions and temperature variations, appropriate expansion joints are to be provided.

This may apply in particular in the case of cable runs on the weather deck.

7.7 Cables in closed pipes or conduits

7.7.1 Closed pipes or conduits are to have such internal dimensions and radius of bend as will permit the easy drawing in and out of the cables which they are to contain; the internal radius of bend is to be not less than that permitted for cables and, for pipes exceeding 63 mm external diameter, not less than twice the external diameter of the pipe where this value is greater.

7.7.2 Closed pipes and conduits are to be suitably smooth on the interior and are to have their ends shaped or bushed in such a way as not to damage the cable covering.

7.7.3 The space factor (ratio of the sum of the cross-sectional areas corresponding to the external diameters of the cables to the internal cross-sectional areas of the pipe or conduit) is to be not greater than 0,4.

7.7.4 If necessary, openings are to be provided at the highest and lowest points so as to permit air circulation and ensure that the heat from the cables can be dissipated, and to obviate the possibility of water accumulating at any part of the pipe or conduit.

7.7.5 Vertical trunking for electrical cables is to be so constructed as not to jeopardise the required passive fire protection between the spaces.

7.7.6 Metal pipes or conduits are to be protected against corrosion.

7.7.7 Non-metallic pipes or conduits are to be flame-retardant.

7.8 Cables in casings or trunking and conduits with removable covers

7.8.1 Covers are to be removable and when they are open, cables are to be accessible.

7.8.2 Materials used are to comply with [7.7.6] and [7.7.7].

7.8.3 If the fixing of covers is by means of screws, the latter are to be of non-rusting material and arranged so as not to damage the cables.

7.8.4 Means are to be provided to ensure that the heat from the cables can be dissipated and water accumulation is avoided (see [7.7.4]).

7.9 Cable ends

7.9.1 Terminations in all conductors are to be so made as to retain the original electrical, mechanical, flame-retarding properties of the cable.

7.9.2 Where mechanical clamps are not used, the ends of all conductors having a cross-sectional area greater than 4 mm^2 are to be fitted with soldering sockets or compression-type sockets of sufficient size to contain all the strands of the conductor.

7.9.3 Cables not having a moisture-resistant insulation (e.g. mineral-insulated) are to have their ends effectively sealed against ingress of moisture.

7.10 Joints and tappings (branch circuit)

7.10.1 Cable runs are normally not to include joints. Where absolutely necessary, cable joints are to be carried out by a junction method with rebuilding of the insulation and protective coverings.

7.10.2 Joints in all conductors are to be so made as to retain the original electrical (continuity and isolation), mechanical (strength and protection), flame-retarding and, where necessary, fire-resisting properties of the cable.

7.10.3 Tappings (branch circuits) are to be made via suitable connections or in suitable boxes of such design that the conductors remain adequately insulated and protected from atmospheric action and are fitted with terminals or busbars of dimensions appropriate to the current rating.

7.10.4 Cables for safety voltages are not to terminate in the same connection boxes as cable for higher voltages unless separated by suitable means.

7.11 Earthing and continuity of metal coverings of cables

7.11.1 All metal coverings of cables are to be electrically connected to the metal hull of the ship.

7.11.2 Metal coverings are generally to be earthed at both ends of the cable, except for [7.11.3] and [7.11.4].

7.11.3 Single-point earthing is admitted for final sub-circuits (at the supply end), except for those circuits located in areas with a risk of explosion.

7.11.4 Earthing is to be at one end only in those installations (mineral-insulated cables, intrinsically safe circuits, control circuits (see Ch 3, Sec 5), etc.) where it is required for technical or safety reasons.

7.11.5 Metal coverings of single-core a.c. cables and special d.c. cables with high "ripple" content (e.g. for thyristor equipment) are to be earthed at one point only (e.g. at the mid-point).

7.11.6 The electrical continuity of all metal coverings of cables throughout the length of the latter, particularly at joints and tappings, is to be ensured.

7.11.7 The metal covering of cables may be earthed by means of glands intended for the purpose and so designed as to ensure an effective earth connection.

The glands are to be firmly attached to, and in effective electrical contact with, a metal structure earthed in accordance with these requirements.

7.11.8 The metal covering of cables may also be earthed by means of clamps or clips of corrosion-resistant material making effective contact with the covering and earthed metal.

7.12 Earthing and continuity of metal pipes, conduits and trunking or casings

7.12.1 Metal casings, pipes, conduits and trunking are to be effectively earthed.

7.12.2 Pipes or conduits may be earthed by being screwed into a metal enclosure, or by nuts on both sides of the wall of a metallic enclosure, provided the surfaces in contact are clean and free from rust, scale or paint and that the enclosure is in accordance with these requirements on earthing.

The connection is to be painted immediately after assembly in order to inhibit corrosion.

7.12.3 Pipes and conduits may be earthed by means of clamps or clips of corrosion-resistant metal making effective contact with the earthed metal.

7.12.4 Pipes, conduits or trunking together with connection boxes of metallic material are to be electrically continuous.

7.12.5 All joints in metal pipes and conduits used for earth continuity are to be soundly made and protected, where necessary, against corrosion.

7.12.6 Individual short lengths of pipes or conduits need not be earthed.

7.12.7 The connections to earth are to have a resistance less than 0,1 Ω.

7.13 Precautions for single-core cables for a.c.

7.13.1 For the earthing of metal coverings see [7.11.5].

7.13.2 Where it is necessary to use single-core cables for alternating current circuits rated in excess of 20 A, the requirements of [7.13.3] to [7.13.7] are to be complied with.

7.13.3 Conductors belonging to the same circuit are to be contained within the same pipe, conduit or trunking, unless this is of non-magnetic material.

7.13.4 Cable clips are to include cables of all phases of a circuit unless the clips are of non-magnetic material.

7.13.5 In the installation of two, three or four single-core cables forming respectively single-phase circuits, three-phase circuits, or three-phase and neutral circuits, the cables are to be in contact with one another, as far as possible. In any event, the distance between the external covering of two adjacent cables is to be not greater than one diameter.

7.13.6 When single-core cables having a current rating greater than 250 A are installed near a steel bulkhead, the clearance between the cables and the bulkhead is to be at least 50 mm, unless the cables belonging to the same circuit are installed in trefoil twisted formation.

7.13.7 Magnetic material is not to be used between single-core cables of a group. Where cables pass through steel plates, all the conductors of the same circuit are to pass through a plate or gland, so made that there is no magnetic material between the cables, and the clearance between the cables and the magnetic material is to be no less than 75 mm, unless the cables belonging to the same circuit are installed in trefoil twisted formation.

7.14 Cables in refrigerated spaces

7.14.1 For the types of cables permitted in refrigerated spaces, see Ch 2, Sec 3, [9.4].

7.14.2 Power cables installed in refrigerated spaces are not to be covered by thermal insulation. Moreover, such cables are not to be placed directly on the face of the refrigerated space unless they have a thermoplastic or elastomeric extruded sheath.

7.14.3 Power cables entering a refrigerated space are to pass through the walls and thermal insulation at right angles, in tubes sealed at each end and protected against oxidation.

7.15 Cables in areas with a risk of explosion

7.15.1 For installation of cables permitted in areas with a risk of explosion, see Ch 2, Sec 3, [10.5].

7.15.2 For penetration of bulkheads or decks separating areas with a risk of explosion, see [7.5.4].

7.15.3 Terminals of intrinsically safe circuits are to be separated from terminals of non-intrinsically safe circuits by a physical distance of at least 50 mm, or by an earthed metallic partition.

7.15.4 In enclosures, unscreened wirings of intrinsically safe circuits are to be separated from non-intrinsically safe circuits by a physical distance of at least 50mm, or by an earthed metallic partition.

7.16 Cables and apparatus for services required to be operable under fire conditions

7.16.1 Cables and apparatus for services required to be operable under fire conditions including their power supplies are to be so arranged that the loss of these services is minimized due to a localized fire at any one area or zone listed in Ch 2, Sec 1, [3.14].

7.17 Cables in the vicinity of radio equipment

7.17.1 All cables between antennas and transmitters are not to be routed along with any other cable except when mitigation measures are taken in accordance with Annex B of IEC 60533:2015.

7.17.2 Where it is necessary to use single-core cables, the arrangement of conductors is to be such as to avoid complete or partial loops.

7.18 Cables for submerged bilge pumps

7.18.1 See Ch 2, Sec 3, [9.7].

7.19 Cable trays/protective casings made of plastics materials

7.19.1 Cable trays or protective casings made of plastics materials (thermoplastic or thermosetting plastic materials) are to be case-by-case approved or type-approved in accordance with IACS recommendation No. 73 rev.3.

7.19.2 Cable trays/protective casings are to be supplemented by metallic fixing and straps such that in the event of a fire they, and the cables affixed, are prevented from falling and causing injury to personnel and/or an obstruction to any escape route. When used on open deck, they are to be protected against U.V. light.

7.19.3 The load on the cable trays/ protective casings is to be within the Safe Working Load (SWL). The support spacing is not to be greater than the manufacturer recommendations nor in excess of spacing at SWL test. In general, the spacing is not to exceed 2 meters.

7.19.4 The selection and spacing of cable tray/protective casing supports are to take into account:

- cable trays/protective casings' dimensions
- mechanical and physical properties of their material
- mass of cable trays/protective casings
- loads due weight of cables, external forces, thrust forces and vibrations
- maximum accelerations to which the system may be subjected
- combination of loads.

7.19.5 The sum of the cables total cross-sectional area, based on the cables external diameter is not to exceed 40% of the protective casing internal cross-sectional area. This does not apply to a single cable in a protective casing.

7.20 Cables in environmentally controlled spaces

7.20.1 Cables feeding electrical equipment located in environmentally controlled spaces are to comply with Ch 2, Sec 11, [1.3.2].

8 Various appliances

8.1 Lighting fittings

8.1.1 Lighting fittings are to be so arranged as to prevent temperature rises which could damage the cables and wiring.

Note 1: Where the temperature of terminals of lighting fittings exceeds the maximum conductor temperature permitted for the supplied cable (see Ch 2, Sec 3, [9.9]), special installation arrangements, such as terminal boxes thermally insulated from the light source, are to be provided.

8.1.2 Lighting fittings are to be so arranged as to prevent surrounding material from becoming excessively hot.

8.1.3 Lighting fittings are to be secured in place such that they cannot be displaced by the motion of the vessel.

8.1.4 Emergency lights are to be marked for easy identification.

8.2 Heating appliances

8.2.1 Space heaters are to be so installed that clothing, bedding and other flammable material cannot come in contact with them in such a manner as to cause risk of fire.

Note 1: To this end, for example, hooks or other devices for hanging garments are not to be fitted above space heaters or, where appropriate, a perforated plate of incombustible material is to be mounted above each heater, slanted to prevent hanging anything on the heater itself.

8.2.2 Space heaters are to be so installed that there is no risk of excessive heating of the bulkheads or decks on which or next to which they are mounted.

8.2.3 Combustible materials in the vicinity of space heaters are to be protected by suitable incombustible and thermal-insulating materials.

8.3 Heating cables and tapes or other heating elements

8.3.1 Heating cables and tapes or other heating elements are not to be installed in contact with combustible materials. Where they are installed close to such materials, they are to be separated by means of a non-flammable material.

Section 13 High-voltage Installations

1 General

1.1 Field of application

1.1.1 The following requirements apply to a.c. three-phase systems with nominal voltage exceeding 1kV, the nominal voltage being the voltage between phases.

If not otherwise stated herein, construction and installation applicable to low-voltage equipment stated in Part C, Chapter 2 generally apply to high-voltage equipment.

1.2 Nominal system voltage

1.2.1 The nominal system voltage is not to exceed 15 kV.

Note 1: Where necessary for special application, higher voltages may be accepted by the Society.

1.3 High-voltage, low-voltage segregation

1.3.1 Equipment with voltage above about 1 kV is not to be installed in the same enclosure as low-voltage equipment, unless segregation or other suitable measures are taken to ensure that access to low-voltage equipment is obtained without danger.

2 System design

2.1 Distribution

2.1.1 It is to be possible to split the main switchboard into at least two independent sections, by means of at least one circuit breaker or other suitable disconnecting devices, each supplied by at least one generator. If two separate switchboards are provided and interconnected with cables, a circuit breaker is to be provided at each end of the cable.

Services which are duplicated are to be divided between the sections.

2.1.2 In the event of an earth fault, the current is not to be greater than full load current of the largest generator on the switchboard or relevant switchboard section and not less than three times the minimum current required to operate any device against earth fault.

It is to be assured that at least one source neutral to ground connection is available whenever the system is in the energised mode. Electrical equipment in directly earthed neutral or other neutral earthed systems is to withstand the current due to a single phase fault against earth for the time necessary to trip the protection device.

2.1.3 Means of disconnection are to be fitted in the neutral earthing connection of each generator so that the generator may be disconnected for maintenance and for insulation resistance measurement.

2.1.4 In systems with neutral earthed, connection of the neutral to the hull is to be provided for each section.

2.1.5 Alternators running in parallel may have a common neutral connection to earth provided they are suitably designed to avoid excessive circulating currents.

This is particularly important if the alternators are of different size and make. Alternators in which the third harmonic content does not exceed 5% may be considered adequate.

Note 1: This would mostly occur with a neutral bus with a single grounding resistor with the associated neutral switching. Where individual resistors are used, circulation of the third harmonic currents between paralleled alternators is minimised.

2.1.6 In systems with earthed neutral, resistors or other current-limiting devices for the connection of the neutrals to the hull are to be provided for each section in which the systems are split [2.1.2].

2.2 Degrees of protection

2.2.1 Each part of the electrical installation is to be provided with a degree of protection appropriate to the location, as a minimum the requirements of IEC 60092-201.

2.2.2 The degree of protection of enclosures of rotating electrical machines is to be at least IP 23.

The degree of protection of terminals is to be at least IP 44.

For motors installed in spaces accessible to unqualified personnel, a degree of protection against approaching or contact with live or moving parts of at least IP 4X is required.

2.2.3 The degree of protection of enclosures of transformers is to be at least IP 23.

For transformers installed in spaces accessible to unqualified personnel, a degree of protection of at least IP 4X is required.

For transformers not contained in enclosures, see [7.1].

2.2.4 The degree of protection of metal enclosed switchgear, controlgear assemblies and static converters is to be at least IP 32. For switchgear, control gear assemblies and static converters installed in spaces accessible to unqualified personnel, a degree of protection of at least IP 4X is required.

2.3 Insulation

2.3.1 In general, for non type tested equipment phase-to-phase air clearances and phase-to-earth air clearances between non-insulated parts are to be not less than those specified in Tab 1.

Intermediate values may be accepted for nominal voltages, provided that the next higher air clearance is observed.

In the case of smaller distances, an appropriate voltage impulse test is to be applied.

Table 1 : Minimum clearances

Nominal voltage (kV)	Highest voltage for equipment (kV)	Minimum air clearance (mm)
3 - 3,3	3.6	55
6 - 6,6	7.2	90
10 - 11	12	120
15	17.5	160

2.3.2 Creepage distances between live parts and between live parts and earthed metal parts are to be in accordance with IEC 60092-503 for the nominal voltage of the system, the nature of the insulation material and the transient overvoltage developed by switch and fault conditions.

2.4 Protection

2.4.1 Protective devices are to be provided against phase-to-phase faults in the cables connecting the generators to the main switchboard and against interwinding faults within the generators. The protective devices are to trip the generator circuit breaker and to automatically de-excite the generator.

In distribution systems with a neutral earthed, phase-to-earth faults are also to be treated as above.

2.4.2 Any earth fault in the system is to be indicated by means of a visual and audible alarm.

In low impedance or direct earthed systems provision is to be made to automatically disconnect the faulty circuits. In high impedance earthed systems, where outgoing feeders will not be isolated in case of an earth fault, the insulation of the equipment is to be designed for the phase-to-phase voltage.

A system is defined effectively earthed (low impedance) when this factor is lower than 0,8. A system is defined non-effectively earthed (high impedance) when this factor is higher than 0,8.

Note 1: Earthing factor is defined as the ratio between the phase-to-earth voltage of the health phase and the phase-to-phase voltage. This factor may vary between $1/3^{1/2}$ and 1.

2.4.3 Power transformers are to be provided with overload and short circuit protection.

When transformers are connected in parallel, tripping of the protective devices on the primary side is to automatically trip the switch connected on the secondary side.

2.4.4 Voltage transformers are to be provided with overload and short circuit protection on the secondary side.

2.4.5 Fuses are not to be used for overload protection.

2.4.6 Lower voltage systems supplied through transformers from high-voltage systems are to be protected against overvoltages. This may be achieved by:

a) direct earthing of the lower voltage system

b) appropriate neutral voltage limiters

c) earthed screen between the primary and secondary windings of transformers.

3 Rotating machinery

3.1 Stator windings of generators

3.1.1 Generator stator windings are to have all phase ends brought out for the installation of the differential protection.

3.2 Temperature detectors

3.2.1 Rotating machinery is to be provided with temperature detectors in its stator windings to actuate a visual and audible alarm in a normally attended position whenever the temperature exceeds the permissible limit.

If embedded temperature detectors are used, means are to be provided to protect the circuit against overvoltage.

3.3 Tests

3.3.1 In addition to the tests normally required for rotating machinery, a high-voltage test in accordance with IEC 60034-15 is to be carried out on the individual coils in order to demonstrate a satisfactory withstand level of the inter-turn insulation to steep fronted switching surges.

4 Power transformers

4.1 General

4.1.1 Dry type transformers are to comply with IEC 60076-11.

Liquid cooled transformers are to comply with the applicable parts of the IEC 60076 series.

Oil immersed transformers are to be provided with the following alarms and protection:

- liquid level (Low) - alarm
- liquid temperature (High) - alarm
- liquid level (Low) - trip or load reduction
- liquid temperature (High) - trip or load reduction
- gas pressure relay (High) - trip.

5 Cables

5.1 General

5.1.1 Cables are to be constructed in accordance with IEC 60092-353 and 60092-354 or other equivalent Standard.

6 Switchgear and controlgear assemblies

6.1 General

6.1.1 Switchgear and controlgear assemblies are to be constructed in accordance with IEC 62271-200 and the following additional requirements.

6.2 Construction

6.2.1 Switchgear is to be of metal-enclosed type in accordance with IEC 62271-200 or of the insulation-enclosed type in accordance with IEC 62271-201.

6.2.2 Withdrawable circuit breakers and switches are to be provided with mechanical locking facilities in both service and disconnected positions. For maintenance purposes, key locking of withdrawable circuit breakers and switches and fixed disconnectors is to be possible.

Withdrawable circuit breakers are to be located in the service position so that there is no relative motion between fixed and moving portions.

6.2.3 The fixed contacts of withdrawable circuit breakers and switches are to be so arranged that in the withdrawable position the live contacts are automatically covered.

Shutters are to be clearly marked for incoming and outgoing circuits. This may be achieved with the used of colours or labels.

6.2.4 For maintenance purposes an adequate number of earthing and short-circuiting devices is to be provided to enable circuits to be worked on in safety.

6.2.5 Switchgear and controlgear assemblies are to be internal arc classified (IAC).

Where swichgear and controlgear are accessible by authorized personnel only, Accessibility Type A is sufficient (IEC 62271-200 Annex AA 2.2). Accessibility Type B is required if accessible by non-authorised personnel.

Installation and location of the switchgear and controlgear is to correspond with its internal arc classification and classified sides (F, L and R)

6.3 Auxiliary systems

6.3.1 If electrical energy and/or physical energy is required for the operation of circuit-breakers and switches, a store supply of such energy is to be provided for at least two operations of all the components.

However, the tripping due to overload or short-circuit, and under-voltage is to be independent of any stored electrical energy sources. This does not preclude shunt tripping provided that alarms are activated upon lack of continuity in the release circuits and power supply failures.

6.3.2 When external source of supply is necessary for auxiliary circuits, at least two external sources of supply are to be provided and so arranged that a failure or loss of one source will not cause the loss of more than one generator set and/or a main switchboard section as described in [2.1.1] and/or set of essential services.

Where necessary one source of supply is to be from the emergency source of electrical power for the start up from dead ship condition.

6.4 High-voltage test

6.4.1 A power-frequency voltage test is to be carried out on any switchgear and controlgear assemblies. The test voltage is to be applied for at least 1 minute and is to be as given in Tab 2.

Table 2 : Test voltages for high-voltage assemblies

Nominal voltage (kV)	Highest voltage for equipment (kV)	Test voltage a.c. (r.m.s.) (kV)
3 - 3,3	3,6	10
6 - 6,6	7,2	20
10 - 11	12,0	28
15	17,5	38

7 Installation

7.1 Electrical equipment

7.1.1 Where equipment is not contained in an enclosure but a room forms the enclosure of the equipment, the access doors are to be so interlocked that they cannot be opened until the supply is isolated and the equipment earthed down.

At the entrance to spaces where high-voltage electrical equipment is installed, a suitable marking is to be placed indicating danger of high-voltage. As regards high-voltage electrical equipment installed outside the aforementioned spaces, similar marking is to be provided.

An adequate, unobstructed working space is to be left in the vicinity of high-voltage equipment for preventing potential severe injuries to personnel performing maintenance activities. In addition, the clearance between the switchboard and the ceiling / deckhead above is to meet the requirements of the Internal Arc Classification according to IEC 62271-200. See [6.2.5].

7.2 Cables

7.2.1 In accommodation spaces, high-voltage cables are to be run in enclosed cable transit systems.

7.2.2 High-voltage cables are to be segregated from cables operating at different voltage ratings; in particular, they are not to be run in the same cable bunch, in the same ducts or pipes, or in the same box.

Where high-voltage cables of different voltage ratings are installed on the same cable tray, the air clearance between cables is not to be less than the minimum air clearance for the higher voltage side in [2.3.1]. However, high-voltage cables are not to be installed on the same cable tray for cables operating at the nominal system voltage of 1 kV and less.

7.2.3 High-voltage cables are generally to be installed on cable trays when they are provided with a continuous metallic sheath or armour which is effectively bonded to earth; otherwise, they are to be installed for their entire length in metallic castings effectively bonded to earth.

7.2.4 Terminations in all conductors of high-voltage cables are, as far as practicable, to be effectively covered with suitable insulating material. In terminal boxes, if conductors are not insulated, phases are to be separated from earth and from each other by substantial barriers of suitable insulating materials.

High-voltage cables of the radial field type, i.e. having a conductive layer to control the electric field within the insulation, are to have terminations which provide electric stress control.

Terminations are to be of a type compatible with the insulation and jacket material of the cable and are to be provided with means to ground all metallic shielding components (i.e. tapes, wires etc.).

7.2.5 High-voltage cables are to be readily identifiable by suitable marking.

7.2.6 Before a new high-voltage cable installation, or an addition to an existing installation, is put into service, a voltage withstand test is to be satisfactorily carried out on each completed cable and its accessories.

The test is to be carried out after an insulation resistance test.

For cables with rated voltage (Uo/U) above 1,8/3 kV (Um = 3,6 kV) an a.c. voltage withstand test may be carried out upon advice from high-voltage cable manufacturer. One of the following test is to be used:

- test for 5 minutes with the phase to phase voltage of the system applied between the conductor and the metallic screan/sheath
- test for 24 hours with the normal operating voltage of the system. Alternatively, a d.c. test voltage equal to 4 Uo may be applied for 15 minutes.

For cables with rated voltage (Uo/U) up to 1,8/3 kV (Um = 3,6 kV) an d.c. voltage equal to 4 Uo is to be applied for 15 minutes.

7.2.7 After completion of the test, the conductors are to be connected to earth for a sufficient period in order to remove any trapped electric charge.

An insulation resistance test is then repeated.

Section 14 Electric Propulsion Plant

1 General

1.1 Applicable requirements

1.1.1 The following requirements apply to ships for which the main propulsion plants are provided by at least one electric propulsion motor and its electrical supply. All electrical components of the propulsion plants are to comply with these requirements.

1.1.2 Prime movers are to comply with the requirements of Ch 1, Sec 2.

1.1.3 For the torsional vibration characteristics of the electric propulsion plant, the provisions of Ch 1, Sec 9 apply.

1.1.4 Cooling and lubricating oil systems are to comply with the requirements of Ch 1, Sec 10.

1.1.5 Monitoring and control systems are to comply with the requirements of Part C, Chapter 3.

1.1.6 Installations assigned an additional notation for automation are to comply with the requirements of Part F, Chapter 3 and Part F, Chapter 4.

1.2 Operating conditions

1.2.1 The normal torque available on the electric propulsion motors for manoeuvring is to be such as to enable the vessel to be stopped or reversed when sailing at its maximum service speed.

1.2.2 Adequate torque margin is to be provided for three-phase synchronous motors to avoid the motor pulling out of synchronism during rough weather and when turning.

1.2.3 Means are to be provided to limit the continuous input to the electric propulsion motor. This value is not to exceed the continuous full load torque for which motor and shafts are designed.

1.2.4 The plant as a whole is to have sufficient overload capacity to provide the torque, power and reactive power needed during starting and manoeuvring conditions.

Locked rotor torque which may be required in relation to the operation of the vessel (e.g. for navigation in ice) is to be considered.

1.2.5 The electric motors and shaftline are to be constructed and installed so that, at any speed reached in service, all the moving components are suitably balanced.

2 Design of the propulsion plant

2.1 General

2.1.1 The electrical power for the propulsion system may be supplied from generating sets, dedicated to the propulsion system, or from a central power generation plant, which supplies the ship's services and electric propulsion.

The minimum configuration of an electric propulsion plant consists of one prime mover, one generator and one electric motor. When the electrical production used for propulsion is independent of the shipboard production, the diesel engines driving the electric generators are to be considered as main engines.

Note 1: When the electric power plant is constituted with 2 generators, the corresponding prime movers are to be considered as main propulsion medium. For electrical propulsion plant fitted with more than 2 generators, they will be considered as auxiliary generators. The corresponding control and monitoring will be considered accordingly.

2.1.2 For plants having only one propulsion motor controlled via a static converter, a standby converter which it is easy to switch over to is to be provided. Double stator windings with one converter for each winding are considered as an alternative solution.

2.1.3 In electric propulsion plants having two or more constant voltage propulsion generating sets, the electrical power for the ship's auxiliary services may be derived from this source. Additional ship's generators for auxiliary services need not be fitted provided that effective propulsion and the services mentioned in Ch 2, Sec 3, [2.2.3] are maintained with any one generating set out of service.

Where transformers are used to supply the ship's auxiliary services, see Ch 2, Sec 5.

2.1.4 Plants having two or more propulsion generators, two or more static converters or two or more motors on one propeller shaft are to be so arranged that any unit may be taken out of service and disconnected electrically, without affecting the operation of the others.

2.2 Power supply

2.2.1 Where the plant is intended exclusively for electric propulsion, voltage variations and maximum voltage are to be maintained within the limits required in Ch 2, Sec 2.

2.2.2 When an energy storage system (ESS) is used to supply the electric propulsion and when this ESS is necessary to maintain the voltage and frequency variations of power supply between the limits of the rules defined in Ch 2, Sec 2 (for instance the peak power load during ice breaking of the pods), the requirements of Pt F, Ch 14, Sec 1 are to be complied with.

2.2.3 In special conditions (e.g. during crash-stop manoeuvres), frequency variations may exceed the limits stipulated in Ch 2, Sec 3 provided that other equipment operating on the same network is not unduly affected.

2.2.4 The electric plant is to be so designed as to prevent the harmful effects of electromagnetic interference generated by semiconductor converters, in accordance with Ch 2, Sec 3.

2.3 Auxiliary machinery

2.3.1 Propeller/thruster auxiliary plants are to be supplied directly from the main switchboard or from the main distribution board or from a distribution board reserved for such circuits, at the auxiliary rated voltage.

2.3.2 When the installation has one or more lubrication systems, devices are to be provided to ensure the monitoring of the lubricating oil return temperature.

2.3.3 Propelling machinery installations with a forced lubrication system are to be provided with alarm devices which will operate in the event of oil pressure loss.

2.4 Electrical Protection

2.4.1 Automatic disconnections of electric propulsion plants which adversely affect the manoeuvrability of the ship are to be restricted to faults liable to cause severe damage to the equipment.

2.4.2 The following protection of converters is to be provided:

- protection against overvoltage in the supply systems to which converters are connected
- protection against overcurrents in semiconductor elements during normal operation
- short-circuit protection.

2.4.3 Overcurrent protective devices in the main circuits are to be set sufficiently high so that there is no possibility of activation due to the overcurrents caused in the course of normal operation, e.g. during manoeuvring or in heavy seas.

2.4.4 Overcurrent protection may be replaced by automatic control systems ensuring that overcurrents do not reach values which may endanger the plant, e.g. by selective tripping or rapid reduction of the magnetic fluxes of the generators and motors.

2.4.5 In the case of propulsion plants supplied by generators in parallel, suitable controls are to ensure that, if one or more generators are disconnected, those remaining are not overloaded by the propulsion motors.

2.4.6 In three-phase systems, phase-balance protective devices are to be provided for the motor circuit which de-excite the generators and motors or disconnect the circuit concerned.

2.5 Excitation of synchronous electric propulsion motor

2.5.1 Each propulsion motor is to have its own exciter.

2.5.2 For plants where only one generator or only one motor is foreseen, each machine is to be provided with a standby exciter, which it is easy to switch over to.

2.5.3 In case of multi-propeller propulsion ships, standby exciter may be omitted, provided failure of one exciter on one electric motor doesn't impair the functionality of the remaining motor.

2.5.4 In excitation circuits, there is to be no overload protection causing the opening of the circuit, except for excitation circuits with semiconductor converters.

2.5.5 Each exciter is to be supplied by a separate feeder.

3 Contruction of rotating machines, semiconductor converters and braking resistors

3.1 Ventilation

3.1.1 Where electrical machines are fitted with an integrated fan and are to be operated at speeds below the rated speed with full load torque, full load current, full load excitation or the like, the design temperature rise is not to be exceeded.

3.1.2 Where electrical machines or converters are force-ventilated, at least two fans, or other suitable arrangements, are to be provided so that limited operation is possible in the event of one fan failing.

3.2 Protection against moisture and condensate

3.2.1 Machines and equipment which may be subject to the accumulation of moisture and condensate are to be provided with effective means of heating. The latter is to be provided for motors above 500 kW, in order to maintain the temperature inside the machine at about 3°C above the ambient temperature.

3.2.2 Provision is to be made to prevent the accumulation of bilge water, which is likely to enter inside the machine.

3.3 Rotating machines

3.3.1 Electrical machines are to be able to withstand the excess speed which may occur during operation of the ship.

3.3.2 The design of rotating machines supplied by static converters is to consider the effects of harmonics.

3.3.3 The winding insulation of electrical machines is to be capable of withstanding the overvoltage which may occur in manoeuvring conditions.

3.3.4 The design of a.c. machines is to be such that they can withstand without damage a sudden short-circuit at their terminals under rated operating conditions.

3.3.5 The obtainable current and voltage of exciters and their supply are to be suitable for the output required during manoeuvring and overcurrent conditions, including short-circuit in the transient period.

3.4 Semiconductor converters

3.4.1 The following limiting repetitive peak voltages U_{RM} are to be used as a base for each semiconductor valve:

- when connected to a supply specifically for propeller drives:
  $U_{RM} = 1,5\ U_P$
- when connected to a common main supply:
  $U_{RM} = 1,8\ U_P$

where

U_P : Peak value of the rated voltage at the input of the semiconductor converter.

3.4.2 For semiconductor converter elements connected in series, the values in [3.4.1] are to be increased by 10%. Equal voltage distribution is to be ensured.

3.4.3 For parallel-connected converter elements, an equal current distribution is to be ensured.

3.4.4 Means are to be provided, where necessary, to limit the effects of the rate of harmonics to the system and to other semiconductor converters. Suitable filters are to be installed to keep the current and voltage within the limits given in Ch 2, Sec 2.

3.4.5 The piping system of the cooling system is to be in accordance with Ch 1, Sec 10.

3.5 Braking resistors

3.5.1 Braking resistors may be provided to absorb excess amounts of regenerated energy and to reduce the speed of the propulsion motor. When provided, each braking resistor is to be tested according to [6.2].

4 Control and monitoring

4.1 General

4.1.1 The control and monitoring systems, including computer based systems, are to be type approved, according to Ch 3, Sec 6.

4.2 Power plant control systems

4.2.1 The power plant control systems are to ensure that adequate propulsion power is available, by means of automatic control systems and/or manual remote control systems.

4.2.2 The automatic control systems are to be such that, in the event of a fault, the propeller speed and direction of thrust do not undergo substantial variations.

4.2.3 Failure of the power plant control system is not to cause complete loss of generated power (i.e. blackout) or loss of propulsion.

4.2.4 The loss of power plant control systems is not to cause variations in the available power; i.e. starting or stopping of generating sets is not to occur as a result.

4.2.5 Where power-aided control (for example with electrical, pneumatic or hydraulic aid) is used for manual operation, failure of such aid is not to result in interruption of power to the propeller. Any such device is to be capable of purely manual local operation.

4.2.6 The control system is to include the following main functions:

- monitoring of the alarms: any event critical for the proper operation of an essential auxiliary or a main element of the installation requiring immediate action to avoid a breakdown is to activate an alarm
- speed or pitch control of the propeller
- shutdown or slow down when necessary.

4.2.7 Where the electric propulsion system is supplied by the main switchboard together with the ship's services, load shedding of the non-essential services and /or power limitation of the electric propulsion is to be provided. An alarm is to be triggered in the event of power limitation or load shedding.

4.2.8 The risk of blackout due to electric propulsion operation is to be eliminated. At the request of the Society, a failure mode and effects analysis is to be carried out to demonstrate the reliability of the system.

4.3 Indicating instruments

4.3.1 In addition to the provisions of Part C, Chapter 3 of the Rules, instruments indicating consumed power and power available for propulsion are to be provided at each propulsion remote control position.

4.3.2 The instruments specified in [4.3.3] and [4.3.4] in relation to the type of plant are to be provided in the main machinery control room.

4.3.3 The following instruments are required for each alternator:

- an ammeter on each phase, or with a selector switch to all phases
- a voltmeter with a selector switch to all phases
- a wattmeter
- a tachometer or frequency meter
- a power factor meter or a var-meter or a field ammeter for each alternator operating in parallel
- a temperature indicator for the stator windings, for each alternator rated above 500 kVA.

4.3.4 The following instruments are required for each a.c. propulsion motor:

- an ammeter on the main circuit
- an embedded temperature sensor for the stator windings of motors rated above 500 kW
- an ammeter on the excitation circuit for each synchronous motor
- a voltmeter for the measurement of the voltage between phases of each motor supplied through a semiconductor frequency converter.

4.3.5 Where a speed measuring system is used for control and indication, the system is to be duplicated with separate sensor circuits and separate power supply.

4.3.6 An ammeter is to be provided on the supply circuit for each propulsion semiconductor bridge.

4.4 Alarm system

4.4.1 An alarm system is to be provided, in accordance with the requirements of Part C, Chapter 3. The system is to give an indication at the control positions when the parameters specified in [4.4] assume abnormal values or any event occurs which can affect the electric propulsion.

4.4.2 Where an alarm system is provided for other essential equipment or installations, the alarms in [4.4.1] may be connected to such system.

4.4.3 Critical alarms for propulsion are to be indicated to the bridge separately.

4.4.4 The following alarms are to be provided, where applicable:

- high temperature of the cooling air of machines and semiconductor converters provided with forced ventilation (see Note 1)
- reduced flow of primary and secondary coolants of machines and semiconductor converters having a closed cooling system with a heat exchanger
- leakage of coolant inside the enclosure of machines and semiconductor converters with liquid-air heat exchangers
- high winding temperature of generators and propulsion motors, where required (see [4.3])
- low lubricating oil pressure of bearings for machines with forced oil lubrication
- tripping of protective devices against overvoltages in semiconductor converters (critical alarm)
- tripping of protection on filter circuits to limit the disturbances due to semiconductor converters
- tripping of protective devices against overcurrents up to and including short-circuit in semiconductor converters (critical alarm)
- voltage unbalance of three-phase a.c. systems supplied by semiconductor frequency converters
- earth fault for the main propulsion circuit (see Note 2)
- earth fault for excitation circuits of propulsion machines (see Note 3).

Note 1: As an alternative to the air temperature of converters or to the airflow, the supply of electrical energy to the ventilator or the temperature of the semiconductors may be monitored.

Note 2: In the case of star connected a.c. generators and motors with neutral points earthed, this device may not detect an earth fault in the entire winding of the machine.

Note 3: This may be omitted in brushless excitation systems and in the excitation circuits of machines rated up to 500 kW. In such cases, lamps, voltmeters or other means are to be provided to detect the insulation status under operating conditions.

4.5 Reduction of power

4.5.1 Power is to be automatically reduced in the following cases:

- low lubricating oil pressure of bearings of propulsion generators and motors
- high winding temperature of propulsion generators and motors
- fan failure in machines and converters provided with forced ventilation, or failure of cooling system
- lack of coolant in machines and semiconductor converters
- load limitation of generators or inadequate available power.

4.5.2 When power is reduced automatically, this is to be indicated at the propulsion control position (critical alarm).

4.5.3 Switching-off of the semiconductors in the event of abnormal service operation is to be provided in accordance with the manufacturer's specification.

5 Installation

5.1 Ventilation of spaces

5.1.1 Loss of ventilation to spaces with forced air cooling is not to cause loss of propulsion. To this end, two sets of ventilation fans are to be provided, one acting as a standby unit for the other. Equivalent arrangements using several independently supplied fans may be considered.

5.2 Cable runs

5.2.1 Instrumentation and control cables are to comply with the requirements of Ch 3, Sec 5 of the Rules.

5.2.2 Where there is more than one propulsion motor, all cables for any one machine are to be run as far as is practicable away from the cables of other machines.

5.2.3 Cables which are connected to the sliprings of synchronous motors are to be suitably insulated for the voltage to which they are subjected during manoeuvring.

6 Tests

6.1 Test of rotating machines

6.1.1 The test requirements are to comply with Ch 2, Sec 4.

6.1.2 For rotating machines, such as synchronous generators and synchronous electric motors, of a power of more than 1 MW, a quality plan detailing the different controls during the machine assembly is to be submitted to the Society for approval.

6.1.3 In relation to the evaluation of the temperature rise, it is necessary to consider the supplementary thermal losses induced by harmonic currents in the stator winding. To this end, two methods may be used:

- direct test method, when the electric propulsion motor is being supplied by its own frequency converter, and/or back to back arrangement according to the supplier's facility
- indirect test method as defined in Ch 2, App 1; in this case, a validation of the estimation of the temperature excess due to harmonics is to be documented. A justification based on a computer program calculation may be taken into consideration, provided that validation of such program is demonstrated by previous experience.

6.1.4 Rotating machines used for propulsion or manoeuvring are to be subjected to the tests stated in Ch 2, Sec 4, [5.1.1].

6.2 Test of braking resistors

6.2.1 Each braking resistor is to undergo the following tests after manufacturing:

- visual and mechanical inspection and dimensions check
- ohmic value measurement
- insulation resistance measurement
- dielectric test
- earth continuity check
- cabling verification
- function tests of leakage detector, space heater and thermostat.

7 Specific requirements for PODs

7.1 General

7.1.1 The requirements for the structural part of a POD are specified in Pt B, Ch 12, Sec 1, [11].

7.1.2 When used as steering manoeuvring system, the POD is to comply with the requirements of Ch 1, Sec 14.

7.2 Electrical slip ring assemblies

7.2.1 Electrical slip ring assemblies are to comply with Ch 2, Sec 10, [2.3] and Ch 2, Sec 10, [2.4].

7.3 Electric motor

7.3.1 The thermal losses are dissipated by the liquid cooling of the bulb and by the internal ventilation of the POD. The justification for the evaluation of the heating balance between the sea water and air cooling is to be submitted to the Society.

Note 1: The calculation method used for the evaluation of the cooling system (mainly based on computer programs) is to be documented. The calculation method is to be justified based on the experience of the designer of the system. The results of scale model tests or other methods may be taken into consideration.

7.3.2 Means to adjust the air cooler characteristics are to be provided on board, in order to obtain an acceptable temperature rise of the windings. Such means are to be set following the dock and sea trials.

7.3.3 Vibrations of the electric motor are to be monitored. The alarm set point is to be defined in accordance with the manufacturer recommendation.

7.4 Instrumentation and associated devices

7.4.1 Means are to be provided to transmit the low level signals connected to the sensors located in the POD.

7.5 Additional tests and tests on board

7.5.1 Tests of electric propulsion motors are to be carried out in accordance with Ch 2, Sec 4, and other tests in accordance with Ch 1, Sec 18.

7.5.2 Tests are to be performed to check the validation of the temperature rise calculation.

7.5.3 Tests on board are described in Ch 1, Sec 18, [3.9].

Section 15 Testing

1 General

1.1 Rule application

1.1.1 Before a new installation, or any alteration or addition to an existing installation, is put into service, the electrical equipment is to be tested in accordance with Articles [2], [3] and [4] to the satisfaction of the Surveyor in charge.

1.2 Insulation-testing instruments

1.2.1 Insulation resistance may be measured with an instrument applying a voltage of at least 500 V. The measurement will be taken when the deviation of the measuring device is stabilised.

Note 1: Any electronic devices present in the installation are to be disconnected prior to the test in order to prevent damage.

1.2.2 For high-voltage installation, the measurement is to be taken with an instrument applying a voltage adapted to the rated value and agreed with the Society.

2 Insulation resistance

2.1 Lighting and power circuits

2.1.1 The insulation resistance between all insulated poles (or phases) and earth and, where practicable, between poles (or phases), is to be at least 1 MΩ in ordinary conditions.

The installation may be subdivided to any desired extent and appliances may be disconnected if initial tests give results less than that indicated above.

2.2 Internal communication circuits

2.2.1 Circuits operating at a voltage of 50 V and above are to have an insulation resistance between conductors and between each conductor and earth of at least 1 MΩ.

2.2.2 Circuits operating at voltages below 50 V are to have an insulation resistance between conductors and between each conductor and earth of at least 0,33 MΩ.

2.2.3 If necessary, any or all appliances connected to the circuit may be disconnected while the test is being conducted.

2.3 Switchboards

2.3.1 The insulation resistance between each busbar and earth and between each insulated busbar and the busbar connected to the other poles (or phases) of each main switchboard, emergency switchboard, section board, etc. is to be not less than 1 MΩ.

2.3.2 The test is to be performed before the switchboard is put into service with all circuit-breakers and switches open, all fuse-links for pilot lamps, earth fault-indicating lamps, voltmeters, etc. removed and voltage coils temporarily disconnected where otherwise damage may result.

2.4 Generators and motors

2.4.1 The insulation resistance of generators and motors, in normal working condition and with all parts in place, is to be measured and recorded.

2.4.2 The test is to be carried out with the machine hot immediately after running with normal load.

2.4.3 The insulation resistance of generator and motor connection cables, field windings and starters is to be at least 1 MΩ.

3 Earth

3.1 Electrical constructions

3.1.1 Tests are to be carried out, by visual inspection or by means of a tester, to verify that all earth-continuity conductors and earthing leads are connected to the frames of apparatus and to the hull, and that in socket-outlets having earthing contacts, these are connected to earth.

3.2 Metal-sheathed cables, metal pipes or conduits

3.2.1 Tests are to be performed, by visual inspection or by means of a tester, to verify that the metal coverings of cables and associated metal pipes, conduits, trunking and casings are electrically continuous and effectively earthed.

4 Operational tests

4.1 Generating sets and their protective devices

4.1.1 Generating sets are to be run at full rated load to verify that the following are satisfactory:

- electrical characteristics
- commutation (if any)
- lubrication
- ventilation
- noise and vibration level.

4.1.2 Suitable load variations are to be applied to verify the satisfactory operation under steady state and transient conditions (see Ch 2, Sec 4, [2]) of:

- voltage regulators
- speed governors.

4.1.3 Generating sets intended to operate in parallel are to be tested over a range of loading up to full load to verify that the following are satisfactory:

- parallel operation
- sharing of the active load
- sharing of the reactive load (for a.c. generators).

Synchronising devices are also to be tested.

4.1.4 The satisfactory operation of the following protective devices is to be verified:

- overspeed protection
- overcurrent protection (see Note 1)
- load-shedding devices
- any other safety devices.

For sets intended to operate in parallel, the correct operation of the following is also to be verified:

- reverse-power protection for a.c. installations (or reverse-current protection for d.c. installations)
- minimum voltage protection.

Note 1: Simulated tests may be used to carry out this check where appropriate.

4.1.5 The satisfactory operation of the emergency source of power and of the transitional source of power, when required, is to be tested. In particular, the automatic starting and the automatic connection to the emergency switchboard, in case of failure of the main source of electrical power, are to be tested.

4.2 Switchgear

4.2.1 All switchgear is to be loaded and, when found necessary by the attending Surveyor, the operation of overcurrent protective devices is to be verified (see Note 1).

Note 1: The workshop test is generally considered sufficient to ensure that such apparatus will perform as required while in operation.

4.2.2 Short-circuit tests may also be required at the discretion of the Society in order to verify the selectivity characteristics of the installation.

4.3 Harmonic filters

4.3.1 The calculation results and the validity of the guidance required in Ch 2, Sec 3, [3.22.2] and Ch 2, Sec 3, [3.22.3] are to be verified by the Surveyor during sea trials.

4.4 Consuming devices

4.4.1 Electrical equipment is to be operated under normal service conditions (though not necessarily at full load or simultaneously) to verify that it is suitable and satisfactory for its purpose.

4.4.2 Motors and their starters are to be tested under normal operating conditions to verify that the following are satisfactory:

- power
- operating characteristics
- commutation (if any)
- speed
- direction of rotation
- alignment.

4.4.3 The remote stops foreseen are to be tested.

4.4.4 Lighting fittings, heating appliances etc. are to be tested under operating conditions to verify that they are suitable and satisfactory for their purposes (with particular regard to the operation of emergency lighting).

4.5 Communication systems

4.5.1 Communication systems, order transmitters and mechanical engine-order telegraphs are to be tested to verify their suitability.

4.6 Installations in areas with a risk of explosion

4.6.1 Installations and the relevant safety certification are to be examined to ensure that they are of a type permitted in the various areas and that the integrity of the protection concept has not been impaired.

4.7 Voltage drop

4.7.1 Where it is deemed necessary by the attending Surveyor, the voltage drop is to be measured to verify that the permissible limits are not exceeded (see Ch 2, Sec 3, [9.11.4]).

4.8 Batteries

4.8.1 The battery autonomy is to be verified on board in accordance with the operating conditions.

4.8.2 The requirements of [4.8.3]] to [4.8.4]apply to:

- Li Ion batteries of capacity above 20kWh
- Li Ion batteries used as emergency source or transitional source
- Other batteries covered by the notation **battery system**.

4.8.3 The scope of tests for the battery pack and associated BMS is to include at least:

- proper working of alarms and defaults and related functions and/or interfacing to the other ship systems
- proper working of monitoring systems
- fitting of battery pack arrangement to battery compartment
- battery capacity and loading duration, at least for the cases mentioned in the ship availability failure analysis
- Insulation resistance test
- IP characteristics.
- temperature rise test, see Sec 7 [1.11.3], Note 2.

4.8.4 The scope of tests for the battery compartment and fire-extinguishing system is to include at least:

- Proper working of fire detection
- Proper working of dangerous gas detection. This includes testing that detectors were properly positioned to detect dangerous gas concentration in any normal circumstance of operation of the ventilation system.
- Proper working of fire-extinguishing system. Gas concentration after fire-extinguishing system operation is to be measured and found high enough to prevent an explosion or stop a fire. Other criteria may be defined or asked for, at the satisfaction of the Society.
- Satisfactory accessibility for common maintenance and devices used for battery overhaul, if any.

Appendix 1 Indirect Test Method for Synchronous Machines

1 General

1.1 Test method

1.1.1 The machine is to be subject to the three separate running tests specified below (see Fig 1) when it is complete (with covers, heat exchangers, all control devices and sensors), the exciter circuit is connected to its normal supply or to a separate supply having the same characteristics, and the supply is fitted with the necessary measuring instruments:

- Test N° 1: No load test at rated voltage and current on rotor, stator winding in open circuit. The temperature rise of the stator winding depends, in such case, on the magnetic circuit losses and mechanical losses due to ventilation, where:
  - Δts1 is the stator temperature rise
  - Δtr1 is the rotor temperature rise.
- Test N° 2: Rated stator winding current with the terminals short-circuited. The temperature of the stator winding depends on the thermal Joule losses and mechanical losses, as above, where:
  - Δts2 is the stator temperature rise
  - Δtr2 is the rotor temperature rise, which for test N° 2 is negligible.
- Test N° 3: Zero excitation. The temperature of all windings depends on the mechanical losses due to friction and ventilation, where:
  - Δts3 is the stator temperature rise
  - Δtr3 is the rotor temperature rise.

Note 1: The synchronous electric motor is supplied at its rated speed by a driving motor. The temperature balance will be considered as being obtained, when the temperature rise does not vary by more than 2°C per hour.

Figure 1 : Schematic diagram used for the test

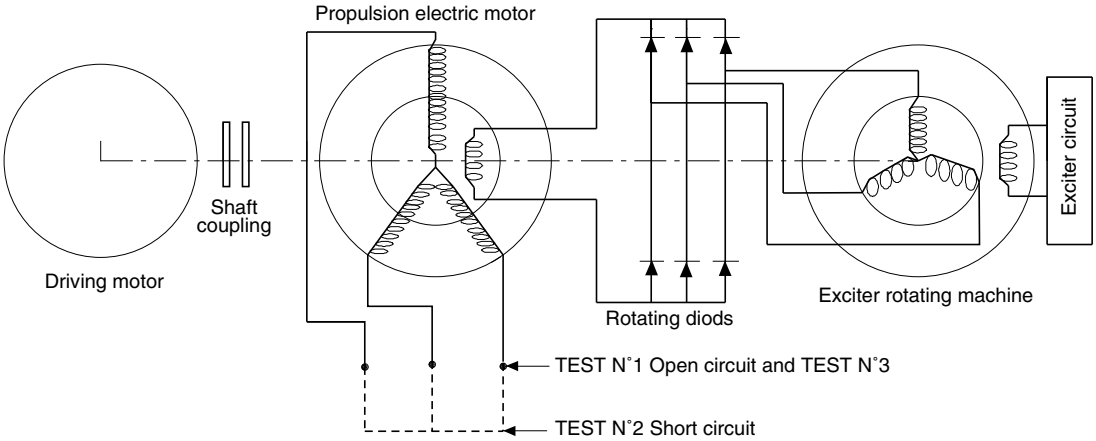

1.1.2 Temperature measurements of the stator winding can be based on the use of embedded temperature sensors or measurement of winding resistance. When using the resistance method for calculation of the temperature rise, the resistance measurement is to be carried out as soon as the machine is shut down.

The rotor temperature rise is obtained by calculation of rotor resistance, Rrotor = U/Ir , where U and I are the voltage and current in the magnetic field winding.

The following parameters are recorded, every 1/2 hour:

- temperature sensors as well as the stator current and voltage
- the main field voltage and current
- the bearing temperatures (embedded sensor or thermometer), and the condition of cooling of the bearings, which are to be compared to those expected on board.

1.1.3 The tests described above allow the determination of the final temperature rise of stator and rotor windings with an acceptable degree of accuracy.

- The temperature rise of the stator winding is estimated as follows:

  Δt stator = $\Delta ts1 + \Delta ts2 - \Delta ts3$

  Δt stator winding is to be corrected by the supplementary temperature rise due to current harmonics evaluated by the manufacturer
- Considering that in test N° 1 the magnetic field winding current Irt is different from the manufacturer's estimated value Ir (due to the fact that the cos φ in operation is not equal to 1), the temperature rise of the rotor is to be corrected as follows:

  Δt rotor = $(\Delta tr1 - \Delta tr3)$ x (rated loading conditions Ir/ test loading conditions Irt)^2 + $\Delta tr3$

1.1.4 In the indirect method, a possible mutual influence of the temperature rise between the stator and the rotor is not taken into consideration. The test results may be representative of the temperature rise on board ship, but a margin of 10 to 15°C is advisable compared with the permitted temperature of the Rules and the measure obtained during tests.

Appendix 2 Indirect Test Method for Induction Machines (Static Torque Method)

1 General

1.1 Test method

1.1.1 The induction machine is to be subject to the three separate tests specified in Tab 1 when it is completely assembled (with covers, heat exchangers, all control devices and sensors).

1.1.2 Temperature measurements of the stator winding is based on the use of embedded temperature sensors. The stator temperature taken into account for the temperature rise is the average of all sensors values.

The following parameters are recorded, every 1/2 hour:

- temperature sensors as well as the stator current and voltage
- bearing temperatures (embedded sensor or thermometer), and the condition of cooling of the bearings, which are to be compared to those expected on board.

1.1.3 The tests described in Tab 1 allow the determination of the final temperature rise of stator windings with an acceptable degree of accuracy.

The stator temperature rise Δt_{stator} is the average of embedded temperature sensors values minus cooling element temperature:

$\Delta t_{stator} = \Delta\theta_1 - \Delta\theta_2 + \Delta\theta_3$

where:

$\Delta\theta_1$: Stator temperature rise of Test 1 defined in Tab 1

$\Delta\theta_2$: Stator temperature rise of Test 2 defined in Tab 1

$\Delta\theta_3$: Stator temperature rise of Test 3 defined in Tab 1.

Table 1 : Tests for induction machines

Test 1	Test 2	Test 3
Rotor locked (see Fig 1), machine ventilated in normal condition with stator supplied by rated current at reduced voltage and frequency	Rotor running at no-load with stator supplied at the same voltage and frequency as Test 1	Rotor running at no-load at rated speed with stator supplied at rated voltage and rated frequency

Figure 1 : Heating Test 1

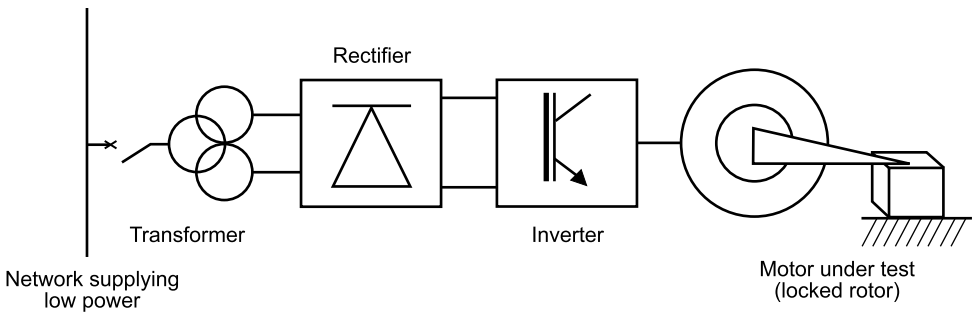

CHAPTER 3
AUTOMATION

Section 1 General Requirements

Section 2 Design Requirements

Section 3 Computer Based Systems

Section 4 Constructional Requirements

Section 5 Installation Requirements

Section 6 Testing

Appendix 1 Type Testing Procedure for Crankcase Oil Mist Detection and Alarm Equipment

Section 1 General Requirements

1 General

1.1 Field of application

1.1.1 The following requirements apply to automation systems, installed on all ships, intended for essential services as defined in Ch 2, Sec 1. They also apply to systems required in Part C, Chapter 1 and Part C, Chapter 2, installed on all ships.

1.1.2 This Chapter is intended to avoid that failures or malfunctions of automation systems associated with essential and non-essential services cause danger to other essential services.

1.1.3 Requirements for unattended machinery spaces and for automation additional class notations are specified in Part F, Chapter 3.

1.2 Regulations and standards

1.2.1 The regulations and standards applicable are those defined in Ch 2, Sec 1.

1.3 Definitions

1.3.1 In addition to the following definitions, unless otherwise specified, the terms used in this chapter have the definitions laid down in Ch 2, Sec 1 or in the IEC standards.

1.3.2 Alarm system

Alarm system is a system intended to give a signal in the event of abnormal running condition.

1.3.3 Automatic control

Automatic control is the control of an operation without direct or indirect human intervention, in response to the occurrence of predetermined conditions.

1.3.4 Automation system

Automation systems are systems including control systems and monitoring systems.

1.3.5 Control station

Control station is a group of control and monitoring devices by means of which an operator can control and verify the performance of equipment.

1.3.6 Control system

Control system is a system by which an intentional action is exerted on an apparatus to attain given purposes.

1.3.7 Failure analysis (Fault tree analysis, risk analysis, FMEA or FMECA)

For safety related functions, failure analysis refers to the analysis carried out using appropriate methods, such as:

- fault tree analysis
- risk analysis
- FMEA or FMECA.

The purpose is to demonstrate that for single failures, systems will fail safe and that systems in operation will not be lost or degraded beyond acceptable performance criteria when specified by the Society.

1.3.8 Fail safe

Fail safe is a design property of an item in which the specified failure mode is predominantly in a safe direction with regard to the safety of the ship, as a primary concern.

1.3.9 Local control

Local control is control of an operation at a point on or adjacent to the controlled switching device.

1.3.10 Monitoring system

Monitoring system is a system designed to observe the correct operation of the equipment by detecting incorrect functioning (measure of variables compared with specified value).

1.3.11 Remote control

Remote control is the control from a distance of apparatus by means of an electrical or other link.

1.3.12 Safety system

Safety system is a system intended to limit the consequence of failure and is activated automatically when an abnormal condition appears.

1.3.13 Software

- Application software is a software performing tasks specific to the actual configuration of the computer based system and supported by the basic software
- Basic software is the minimum software, which includes firmware and middleware, required to support the application software.

1.4 General

1.4.1 The automation systems and components, as indicated in Ch 2, Sec 1, [4], are to be of a type approved by the Society according to the applicable requirements of these Rules and in particular those stated in this Chapter and in Ch 2, Sec 15.

Case-by-case approval may also be granted at the discretion of the Society, based on submission of adequate documentation and subject to the satisfactory outcome of any required tests.

1.4.2 *Main and auxiliary machinery essential for the propulsion, control and safety of the ship shall be provided with effective means for its operation and control.*

1.4.3 Control, alarm and safety systems are to be based on the fail safe principle.

1.4.4 Failure of automation systems is to generate an alarm.

1.4.5 Detailed indication, alarm and safety requirements regarding automation systems for individual machinery and installations are to be found in tables located in Part C, Chapter 1 and in Part F, Chapter 3.

Each row of these tables is to correspond to one independent sensor.

2 Documentation

2.1 Documents to be submitted

2.1.1 The documents listed in Tab 1 are to be submitted.

Table 1 : Documentation to be submitted

No	I/A (1)	Documentation
1	I	General specification for the automation of the ship
2	A	Detailed specification of the essential service systems
3	A	List of components used in the automation circuits, and references (Manufacturer, type, etc.)
4	I	Instruction manuals
5	I	Test procedures for control, alarm and safety systems
6	A	General diagram showing the monitoring and/or control positions for the various installations, with an indication of the means of access and the means of communication between the positions as well as with the engineers
7	A	Diagrams of the supply circuits of automation systems, identifying the power source
8	A	List of monitored parameters for alarm/monitoring and safety systems
9	A	Diagram of the engineers' alarm system
10	I	List of computerized systems as mentioned in Ch 3, Sec 3, [1.6.1]
11	A / I	Documentation as mentioned in Ch 3, Sec 3, Tab 3 and Ch 3, Sec 3, Tab 4
12	I	Change records as mentioned in Ch 3, Sec 3, [6.11]
(1) A = to be submitted for approval; I = to be submitted for information.		

2.2 Documents for type approval of equipment

2.2.1 Documents to be submitted for type approval of equipment are listed hereafter:

- a request for type approval from the manufacturer or his authorized representative
- the technical specification and drawings depicting the system, its components, characteristics, working principle, installation and conditions of use and, when there is a computer based system, the documents listed in Ch 3, Sec 3, Tab 3 and Ch 3, Sec 3, Tab 4.
- any test reports previously prepared by specialized laboratories.

2.2.2 Modifications

Modifications are to be documented by the manufacturer. Subsequent significant modifications to the software and hardware for systems of categories II and III are to be submitted for approval.

Note 1: A significant modification is a modification which influences the functionality and/or the safety of the system.

3 Environmental and supply conditions

3.1 General

3.1.1 General

The automation system is to operate correctly when the power supply is within the range specified in Ch 3, Sec 2.

3.1.2 Environmental conditions

The automation system is to be designed to operate satisfactorily in the environment in which it is located. The environmental conditions are described in Ch 2, Sec 2.

3.1.3 Failure behaviour

The automation system is to have non-critical behaviour in the event of power supply failure, faults or restoration of operating condition following a fault. If a redundant power supply is used, it must be taken from an independent source.

3.2 Power supply conditions

3.2.1 Electrical power supply

The conditions of power supply to be considered are defined in Ch 2, Sec 2.

3.2.2 Pneumatic power supply

For pneumatic equipment, the operational characteristics are to be maintained under permanent supply pressure variations of ± 20% of the rated pressure.

Detailed requirements are given in Ch 1, Sec 10.

3.2.3 Hydraulic power supply

For hydraulic equipment, the operational characteristics are to be maintained under permanent supply pressure variations of ± 20% of the rated pressure.

Detailed requirements are given in Ch 1, Sec 10.

4 Materials and construction

4.1 General

4.1.1 The choice of materials and components is to be made according to the environmental and operating conditions in order to maintain the proper function of the equipment.

4.1.2 The design and construction of the automation equipment is to take into account the environmental and operating conditions in order to maintain the proper function of the equipment.

Section 2 Design Requirements

1 General

1.1

1.1.1 *All control systems essential for the propulsion, control and safety of the ship shall be independent or designed such that failure of one system does not degrade the performance of another system.*

1.1.2 Controlled systems are to have manual operation.

Failure of any part of such systems shall not prevent the use of the manual override.

1.1.3 Automation systems are to have constant performance.

1.1.4 Safety functions are to be independent of control and monitoring functions.

1.1.5 Control, monitoring and safety systems are to have self-check facilities. In the event of failure, an alarm is to be activated. In particular, failure of the power supply of the automation system is to generate an alarm.

1.1.6 When a computer based system is used for control, alarm or safety systems, it is to comply with the requirements of Ch 3, Sec 3.

1.1.7 The automatic change-over switch is to operate independently of both systems. When change-over occurs, no stop of the installation is necessary and the latter is not to enter undefined or critical states.

1.1.8 Emergency stops are to be hardwired and independent of any computer based system.

Note 1: Computerized systems may be admitted if evidence is given demonstrating they provide a safety level equivalent to a hardwired system.

2 Power supply of automation systems

2.1

2.1.1 Automation systems are to be arranged with an automatic change-over to a continuously available stand-by power supply in case of loss of normal power source.

2.1.2 The capacity of the stand-by power supply is to be sufficient to allow the normal operation of the automation systems for at least half an hour.

2.1.3 Failure of any power supply to an automation system is to generate an audible and visual alarm.

2.1.4 Power supplies are to be protected against short circuit and overload for each independent automation system.

Power supplies are to be isolated.

3 Control systems

3.1 General

3.1.1 In the case of failure, the control systems used for essential services are to remain in the last position they had before the failure, unless otherwise specified by these Rules.

3.2 Local control

3.2.1 Each system is to be able to be operated manually from a position located so as to enable visual control of operation. For detailed instrumentation for each system, refer to Part C, Chapter 1and Part C, Chapter 2.

It shall also be possible to control the auxiliary machinery, essential for the propulsion and safety of the ship, at or near the machinery concerned.

Note 1: For electrically driven units in auxiliary services, the local control is normally to be arranged at the motor starter in motor control centers and, if applicable, also near the equipment under control.

3.2.2 Local control systems is to be self-contained and not depend on other systems or external communication links for its intended operation.

3.2.3 When local control is selected, any control signal(s) from the remote control system is to be ignored.

3.3 Remote control systems

3.3.1 When several remote control stations are provided, control of machinery is to be possible at one station at a time. At each location, an indicator showing which location is in control is to be provided.

3.3.2 Remote control is to be provided with the necessary instrumentation, in each remote control station, to allow effective control (correct function of the system, indication of control station in operation, alarm display).

3.3.3 When transferring the control location, no significant alteration of the controlled equipment is to occur. Transfer of control is to be protected by an audible warning and acknowledged by the receiving remote control location. The main remote control location is to be able to take control without acknowledgment.

3.3.4 Failure in remote control systems is not to prevent local operation.

3.4 Automatic control systems

3.4.1 *Automatic starting, operational and control systems shall include provisions for manually overriding the automatic controls.*

3.4.2 Automatic control is to be stable in the range of the controller in normal working conditions.

3.4.3 Automatic control is to have instrumentation to verify the correct function of the system.

3.4.4 For machinery systems which due to their complexity requires continuous automatic control, manual control of the individual Equipment Under Control may not be feasible. In such cases, local means are to be provided to both monitor the concerned process- and to enable/disable any automatic functions / modes (a typical example is the gas supply system to a gas fuelled engine).

4 Control of propulsion machinery

4.1 Application

4.1.1 Ships with restricted navigation notations

The requirements of this article are applicable to all ships except non-propelled units. However, arrangements which are not in compliance with the provisions of this article may be considered for ships with restricted navigation notations.

4.2 Remote control

4.2.1 The requirements mentioned in [3] are to be applied for propulsion machinery.

4.2.2 *The design of the remote control system shall be such that in case of its failure an alarm will be given.*

4.2.3 Supply failure (voltage, fluid pressure, etc.) in propulsion plant remote control is to activate an alarm at the control position. In the event of remote control system failure and unless the Society considers it impracticable, the preset speed and direction of thrust are to be maintained until local control is in operation. This applies in particular in the case of loss of electric, pneumatic or hydraulic supply to the system.

4.2.4 *Propulsion machinery orders from the navigation bridge shall be indicated in the main machinery control room, and at the manoeuvring platform.*

4.2.5 *The control shall be performed by a single control device for each independent propeller, with automatic performance of all associated services, including, where necessary, means of preventing overload of the propulsion machinery. Where multiple propellers are designed to operate simultaneously, they must be controlled by one control device.*

4.2.6 *Indicators shall be fitted on the navigation bridge,* in *the main machinery control room and at the manoeuvring platform, for:*

- *propeller speed and direction of rotation in the case of fixed pitch propellers; and*
- *propeller speed and pitch position in the case of controllable pitch propellers.*

4.2.7 *The main propulsion machinery shall be provided with an emergency stopping device on the navigation bridge which shall be independent of the navigation bridge control system.*

In the event that there is no reaction to an order to stop, provision is to be made for an alternative emergency stop. This emergency stopping device may consist of a simple and clearly marked control device, for example a push-button. This fitting is to be capable of suppressing the propeller thrust, whatever the cause of the failure may be.

4.3 Remote control from navigation bridge

4.3.1 Where propulsion machinery is controlled from the navigation bridge, the remote control is to include an automatic device such that the number of operations to be carried out is reduced and their nature is simplified and such that control is possible in both the ahead and astern directions. Where necessary, means for preventing overload and running in critical speed ranges of the propulsion machinery is to be provided.

4.3.2 On board ships fitted with remote control, direct control of the propulsion machinery is to be provided locally. The local direct control is to be independent from the remote control circuits, and takes over any remote control when in use.

4.3.3 The local control of the propulsion machinery is to continue to operate in the case of failure of any parts of the remote control system or blackout.

4.3.4 *Remote control of the propulsion machinery shall be possible only from one location at a time; at such locations interconnected control positions are permitted. At each location there shall be an indicator showing which location is in control of the propulsion machinery.*

4.3.5 *The transfer of control between the navigation bridge and machinery spaces shall be possible only in the main machinery space or the main machinery control room. The system shall include means to prevent the propelling thrust from altering significantly, when transferring control from one location to another.*

4.3.6 At the navigation bridge, the control of the routine manoeuvres for one line of shafting is to be performed by a single control device: a lever, a handwheel or a push-button board. However each mechanism contributing directly to the propulsion, such as the engine, clutch, automatic brake or controllable pitch propeller, is to be able to be individually controlled, either locally or at a central monitoring and control position in the engine room.

4.3.7 Remote starting of the propulsion machinery is to be automatically inhibited if a condition exists which may damage the machinery, e.g. shaft turning gear engaged, drop of lubrication oil pressure or brake engaged.

4.3.8 As a general rule, the navigation bridge panels are not to be overloaded by alarms and indications which are not required.

4.3.9 *Automation systems shall be designed in a manner which ensures that threshold warning of impending or imminent slowdown or shutdown of the propulsion system is given to the officer in charge of the navigational watch in time to assess navigational circumstances in an emergency. In particular, the systems shall control, monitor, report, alert and take safety action to slowdown or stop propulsion while providing the officer in charge of the navigational watch an opportunity to manually intervene, except for those cases where manual intervention will result in total failure of the engine and/or propulsion equipment within a short time, for example in the case of overspeed.*

4.4 Remote control from navigation bridge for gas fuelled ship

4.4.1 For ships assigned with additional service feature **LNGfuel**, **CNGfuel**, **LPGfuel** or, as relevant, other additional service features defined in Pt A, Ch 1, Sec 2, [4.16.4], the provisions of NR529, 9.4.3; NR529, 15.5(b); NR529, 15.11.4 and NR529, 15.7 are applicable.

4.5 Automatic control

4.5.1 The requirements in Article [3] are applicable. In addition, the following requirements are to be considered, if relevant.

4.5.2 *Main turbine propulsion machinery and, where applicable, main internal combustion propulsion machinery and auxiliary machinery shall be provided with automatic shutoff arrangements in the case of failures such as lubricating oil supply failure which could lead rapidly to complete breakdown, serious damage or explosion.*

4.5.3 The automatic control system is to be designed on a fail safe basis, and, in the event of failure, the system is to be adjusted automatically to a predetermined safe state.

4.5.4 Operations following any setting of the bridge control device (including reversing from the maximum ahead service speed in case of emergency) are to take place in an automatic sequence and with acceptable time intervals, as prescribed by the manufacturer.

4.5.5 For steam turbines, a slow turning device is to be provided which operates automatically if the turbine is stopped longer than admissible. Discontinuation of this automatic turning from the bridge is to be possible.

Note 1: For attended machinery spaces, the slow turning device may be arranged to be operated manually.

4.6 Automatic control of propulsion and manoeuvring units

4.6.1 When the power source actuating the automatic control of propelling units fails, an alarm is to be triggered. In such case, the preset direction of thrust is to be maintained long enough to allow the intervention of engineers. Failing this, minimum arrangements, such as stopping of the shaft line, are to be provided to prevent any unexpected reverse of the thrust. Such stopping may be automatic or ordered by the operator, following an appropriate indication.

4.7 Clutches

4.7.1 Where the clutch of a propulsion engine is operated electrically, pneumatically or hydraulically, an alarm is to be given at the control station in the event of loss of energy; as far as practicable, this alarm is to be triggered while it is still possible to operate the equipment.

4.7.2 When only one clutch is installed, its control is to be fail safe. Other arrangements may be considered in relation to the configuration of the propulsion machinery.

4.8 Brakes

4.8.1 Automatic or remote controlled braking is to be possible only if:

- propulsion power has been shut off
- the turning gear is disconnected
- the shaftline speed (r.p.m.) is below the threshold stated by the builder.

5 Communications

5.1 Communications between navigation bridge and machinery space

5.1.1 *At least two independent means are to be provided for communicating orders from the navigation bridge to the position in the machinery space or in the control room from which the speed and the direction of the thrust of the propellers are normally controlled; one of these is to be an engine room telegraph, which provides visual indication of the orders and responses both in the machinery space and on the navigation bridge,* with audible alarm mismatch between order and response.

5.1.2 The engine room telegraph is required in any case, even if the remote control of the engine is foreseen, irrespective of whether the engine room is attended. An alarm is to be given at the navigation bridge in the event of failure of power supply to the engine room telegraph.

5.1.3 Where the main propulsion system of the ship is controlled from the navigation bridge by a remote control system, the second means of communication may be the same bridge control system.

5.1.4 The second means for communicating orders is to be fed by an independent power supply and is to be independent of other means of communication.

5.1.5 *Appropriate means of communication*, providing for verification of both engine orders and responses, *shall be provided from the navigation bridge and the engine room to any other position from which the speed and direction of thrust of the propellers may be controlled.*

Note 1: This requirement also applies to each local partial control position of the propulsion (e.g. clutches).

5.1.6 For ships assigned with a restricted navigation notation, the requirements of this sub-article may be relaxed at the Society's discretion.

5.2 Engineers’ alarm

5.2.1 *An engineers' alarm shall be provided to be operated from the engine control room or at the manoeuvring platform as appropriate, and shall be clearly audible in the engineers' accommodation*

6 Remote control of valves

6.1

6.1.1 The following requirements are applicable to valves whose failure could impair essential services.

6.1.2 Failure of the power supply is not to permit a valve to move to an unsafe condition.

6.1.3 An indication is to be provided at the remote control station showing the actual position of the valve or whether the valve is fully open or fully closed. This indication may be omitted for quick-closing valves.

6.1.4 When valves are remote controlled, a secondary manual means of operating them is to be provided (see Ch 1, Sec 10, [2.7.3]).

7 Alarm system

7.1 General requirements

7.1.1 Alarms are to be visual and audible and are to be clearly distinguishable, in the ambient noise and lighting in the normal position of the personnel, from any other signals.

7.1.2 Sufficient information is to be provided for proper handling of alarms.

7.1.3 The alarm system is to be of the self-check type; failure within the alarm system, including the outside connection, is to activate an alarm. The alarm circuits are to be independent from each other. All alarm circuits are to be protected so as not to endanger each other.

7.2 Alarm functions

7.2.1 Alarm activation

Alarms are to be activated when abnormal conditions appear in the machinery, which need the intervention of personnel on duty, and on the automatic change-over, when standby machines are installed.

An existing alarm is not to prevent the indication of any further fault.

7.2.2 Acknowledgement of alarm

The acknowledgment of an alarm consists in manually silencing the audible signal and additional visual signals (e.g. rotating light signals) while leaving the visual signal on the active control station. Acknowledged alarms are to be clearly distinguishable from unacknowledged alarms. Acknowledgment should not prevent the audible signal to operate for new alarm.

Alarms shall be maintained until they are accepted and visual indications of individual alarms shall remain until the fault has been corrected, when the alarm system shall automatically reset to the normal operating condition.

Acknowledgment of alarms is only to be possible at the active control station.

Alarms, including the detection of transient faults, are to be maintained until acknowledgment of the visual indication.

Acknowledgment of visual signals is to be separate for each signal or common to a limited group of signals. Acknowledgment is only to be possible when the user has visual information on the alarm condition for the signal or all signals in a group.

7.2.3 Inhibition of alarms

Manual inhibition of separate alarms may be accepted when this is clearly indicated.

Inhibition of alarm and safety functions in certain operating modes (e.g. during start-up or trimming) is to be automatically disabled in other modes.

7.2.4 Time delay of alarms

It is to be possible to delay alarm activation in order to avoid false alarms due to normal transient conditions (e.g. during start-up or trimming).

7.2.5 Transfer of responsibility

Where several alarm control stations located in different spaces are provided, responsibility for alarms is not to be transferred before being acknowledged by the receiving location. Transfer of responsibility is to give an audible warning. At each control station it is to be indicated which location is in charge.

8 Safety system

8.1 Design

8.1.1 System failures

A safety system is to be designed so as to limit the consequence of failures. It is to be constructed on the fail safe principle.

The safety system is to be of the self-check type; as a rule, failure within the safety system, including the outside connection, is to activate an alarm.

8.2 Function

8.2.1 Safety activation

The safety system is to be activated automatically in the event of identified conditions which could lead to damage of associated machinery or systems, such that:

- normal operating conditions are restored (e.g. by the starting of the standby unit), or
- the operation of the machinery is temporarily adjusted to the prevailing abnormal conditions (e.g. by reducing the output of the associated machinery), or
- the machinery is protected, as far as possible, from critical conditions by shutting off the fuel or power supply, thereby stopping the machinery (shutdown), or appropriate shutdown.

8.2.2 Safety indication

When the safety system has been activated, it is to be possible to trace the cause of the safety action. This is to be accomplished by means of a central or local indication.

When a safety system is made inoperative by a manual override, this is to be clearly indicated at corresponding control stations.

Override of safety functions in certain operating modes (e;g; during start-up or trimming) is to be automatically disabled in other modes

Automatic safety actions are to activate an alarm at predefined control stations.

8.3 Shutdown

8.3.1 For shutdown systems of machinery, the following requirements are to be applied:

- when the system has stopped a machine, the latter is not to be restarted automatically before a manual reset of the safety system has been carried out
- the shutdown of the propulsion system is to be limited to those cases which could lead to serious damage, complete breakdown or explosion.

8.4 Standby systems

8.4.1 For the automatic starting system of the standby units, the following requirements are to be applied:

- faults in the electrical or mechanical system of the running machinery are not to prevent the standby machinery from being automatically started
- when a machine is on standby, ready to be automatically started, this is to be clearly indicated at its control position
- the change-over to the standby unit is to be indicated by a visual and audible alarm
- means are to be provided close to the machine, to prevent undesired automatic or remote starting (e.g. when the machine is being repaired)
- automatic starting is to be prevented when conditions are present which could endanger the standby machine.

8.5 Testing

8.5.1 The safety systems are to be tested in accordance with the requirements in Ch 3, Sec 6.

Section 3 Computer Based Systems

1 General requirements

1.1 Scope

1.1.1 This Section applies to design, construction, commissioning and maintenance of computer-based systems where they depend on software for the proper achievement of their functions.

The requirements of Articles [2] to [7] apply to systems which provide control, alarm, monitoring, safety, or internal ship communication functions that are subject to classification requirements.

1.1.2 The additional requirements of Article [8] are to be complied with for ships assigned the additional service feature **SW-Registry**.

1.2 Exclusion

1.2.1 Computer-based systems that are covered by statutory regulations are excluded from the requirements of this Section.

Note 1: Examples of such systems are navigation systems and radio communication system required by SOLAS chapter V and IV.

Note 2: For loading instrument/stability computer, see Pt B, Ch 1, Sec 5, [3].

1.3 References

1.3.1 Applicable Rules

For the purposes of this Section:

- Reference is made to Ch 3, Sec 6, [2] for test specification for type approval
- Reference is made to NR659 for cyber security assessment of ships, systems and equipment.

Note 1: NR659 Rules on Cyber Security for the Classification of Marine Units

1.3.2 Informative standards

For the purposes of this Section, the following standards are listed for information and may be used for the development of hardware/software of computer-based systems:

- IEC 61508:2010 Functional safety of electrical/electronic/programmable electronic safety-related systems
- ISO/IEC 12207:2017 Systems and software engineering – Software life cycle processes
- ISO 9001:2015 Quality Management Systems – Requirements
- ISO/IEC 90003:2018 Software engineering - Guidelines for the application of ISO 9001:2015 to computer software
- IEC 60092-504:2016 Electrical installations in ships - Part 504: Special features - Control and instrumentation
- ISO/IEC 25000:2014 Systems and software engineering - Systems and software Quality Requirements and Evaluation (SQuaRE) - Guide to SQuaRE
- ISO/IEC 25041:2012 Systems and software engineering - Systems and software Quality Requirements and Evaluation (SQuaRE) - Evaluation guide for developers, acquirers and independent evaluators
- IEC 61511:2016 Functional safety - Safety instrumented systems for the process industry sector
- ISO/IEC 15288:2015 Systems and software engineering - System life cycle process
- ISO 90007:2017 Quality management – Guidelines for configuration management
- ISO 24060:2021 Ships and marine technology - Ship software logging system for operational technology.

Note 1: Other industry standards may also be considered.

1.4 Structure

1.4.1 The general certification requirements for computer-based systems and the relation to type approval is described in [2].

1.4.2 The requirements and extent of verification of a computer-based system depends on its categorization into one of three categories. The categories are described in [3].

1.4.3 The requirements of this Section cover the lifecycle of computer-based system from design through operations. The requirements are split into groups representing the different phases of the life cycle and the roles responsible for fulfilling the requirements.

1.4.4 The activities related to the development and delivery of a computer-based system are described in [4].

1.4.5 The activities related to the maintenance in the operational phase are described in [5].

1.4.6 Management of changes to software and systems is described in [6].

1.4.7 The technical requirements on computer-based systems have been gathered in [7].

1.4.8 Each activity contains a requirement part which describes the minimum requirements on the role in question, and a part which describes the Society's verification of the activity in question.

1.5 Definition of abbreviations and terminology

1.5.1 Abbreviations are given in Tab 1. Terminology is given in Tab 2.

Table 1 : Abbreviations

Abbreviation	Expansion
Cat I	Category one systems as defined in [3.1]
Cat II	Category two systems as defined in [3.1]
Cat III	Category three systems as defined in [3.1]
COTS	Commercial off-the-shelf
FAT	Factory acceptance test
FMEA	Failure mode and effect analysis

Abbreviation	Expansion
IT	Information technology
OT	Operational technology
PMS	Planned maintenance system
SAT	System acceptance test
SOST	System of systems test
SSLS	Ship software logging system

Table 2 : Terminology

Term	Definition
Black-box description	A description of a system's functionality and behaviour and performance as observed from outside the system in question
Black-box test methods	Verification of the functionality, performance, and robustness of a system, sub-system or component by only manipulating the inputs and observing the outputs. This does not require any knowledge of the system's inner workings and focuses only on the observable behaviour of the system or component under test in order to achieve the desired level of verification
Computer-based system (CBS)	A programmable electronic device, or interoperable set of programmable electronic devices, organised to achieve one or more specified purposes such as collection, processing, maintenance, use, sharing, dissemination, or disposition of information. CBSs on board include IT and OT systems. A CBS may be a combination of subsystems connected via network. Onboard CBSs may be connected directly or via public means of communications (e.g. Internet) to ashore CBSs, other ships' CBSs and/or other facilities
Data communication link	Data communication link includes point to point links, instrument net and local area networks, normally used for inter-computer communication on board units. The software and hardware which support the data communication are also included
Failure mode description	A document describing the effects due to failures in the system, excluding the failures in the equipment supported by the system. The following aspects are to be covered: • list of failures which are subject to assessment • description of the system response to each of these failures • comments to the consequence of each of these failures
Local Area Network (LAN)	Physical or virtual computer network that interconnects devices within a limited area (e.g. machinery room, ship)
Media Access Control (MAC)	A media access control address of a device is a unique identifier assigned to network interfaces for communications at the data link layer of a network segment
Network communication device	A computer based equipment, ensuring service or function for the communication devices of the ship, who handles, manages and routes packets over the networks
Parameterisation	An action of configuring and tuning system and software functionality by changing parameters. It does not usually require computer programming and is normally done by the System Supplier or a Service Provider, not the operator or end-user.
Programmable device	Physical component where software is installed
Robustness	The ability to respond to abnormal inputs and conditions

Term	Definition
Service Supplier	A person or company, not employed by the Society, who at the request of an equipment manufacturer, shipyard, ship's owner or other client acts in connection with inspection work and provides services for a ship or a mobile offshore unit such as measurements, tests or maintenance of safety systems and equipment, the results of which are used by surveyors in making decisions affecting classification or statutory certification and services
Simulation test	Monitoring, control, or safety system testing where the equipment under control is partly or fully replaced with simulation tools, or where parts of the communication network and lines are replaced with simulation tools
Society Certificate	Compliance document issued by the Society stating: • conformity with applicable rules and requirements • that the tests and inspections have been carried out on the finished certified component itself, or on samples taken from earlier stages in the production of the component, when applicable • that the inspection and tests were performed in the presence of the Surveyor or in accordance with special agreements, i.e. Alternative Survey Scheme (BV Mode I) as per NR320, Sec 3.
Software component	A standalone piece of code that provides specific and closely coupled functionality
Software master files	The computer-files that constitute the original source of the software. For custom made software, this may be readable source- code files, and, for COTS software, it may be different forms of binary files
Software-structure	Overview of how the different software components interact and is commonly referred to as the Software Architecture, or Software Hierarchy. Fig 1 shows the hierarchy and relationships of a typical computer based system
Sub-system	Identifiable part of a system, which may perform a specific function or set of functions
Supplier	A generic term used for any organisation or person that is a contracted or a subcontracted provider of services, system components, or software
System	A combination of components, equipment and logic which has a defined purpose, functionality, and performance. In the context of this Section, a specific system is delivered by one System Supplier
System of systems	A system which is made up of several systems. In the context of this Section, the system of systems encompasses all monitoring, control and safety systems delivered from the Shipyard as a part of a ship
System Supplier	An organisation or person who is a contracted or a subcontracted provider of system components or software under the coordination of the Systems Integrator. In the context of this Section this is a defined role with specific responsibilities.
Systems Integrator	Single organisation or a person coordinating interaction between Suppliers of systems and sub-systems on all stages of life cycle of computer-based systems in order to integrate them into a verified ship-wide system of systems and to provide proper operation and maintenance of the computer-based systems. In the context of this Section this is a defined role with specific responsibilities. During the design and delivery phase the Shipyard is the default Systems Integrator, during operations phase the Owner is the default Systems Integrator
Type approval Certificate	Compliance document issued by the Society by which the Society declares that a product design meets a set of technical requirements
Virtual Local Area Network (VLAN)	A VLAN is a custom network created from one or more existing LANs. It enables groups of devices from multiple networks (both wired and wireless) to be combined into a single logical network. The result is a virtual LAN that can be administered like a physical LAN

Figure 1 : Illustrative system hierarchy

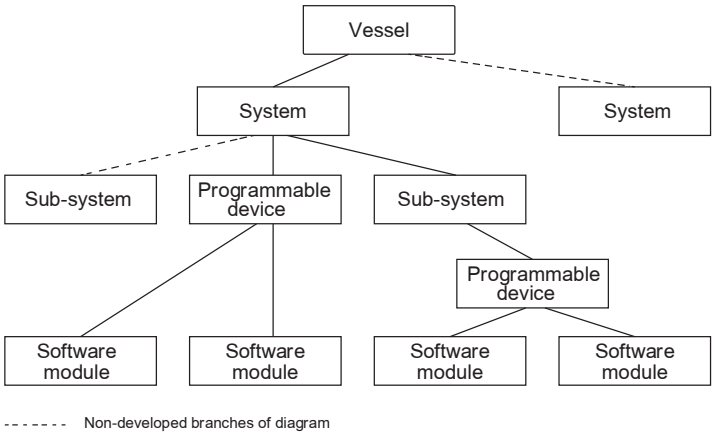

1.6 Documentation to be submitted

1.6.1 List of computerised systems covered by this Section as described in [1.1.1] are to be submitted to the Society as soon as possible during design stage of the ship. This list is to include:

- designation of system involved
- category of system according to [3.1]
- manufacturer of system (if available)
- supplier of control system (if available).

Tab 3 and Tab 4 summarise the documentation to be submitted to the Society.

1.6.2 The user interface description submitted as a part of the system description mentioned in Tab 3 is to contain:

- a description of the functions allocated to each operator interface (keyboard/screen or equivalent)
- a description of individual screen views (schematics, colour photos, etc.)
- a description of how menus are operated (tree presentation)
- an operator manual providing necessary information for installation and use.

Table 3 : Summary of documentation submittal by the System Supplier

Item		Responsible role	System category		
Reference	Document		Cat I	Cat II	Cat III
[4.2.1]	Quality plan	System Supplier		I **(1)**	I **(1)**
[4.2.3]	System description	System Supplier	I **(1)**	A	A
[4.2.4]	Environmental compliance	System Supplier	I **(1)**	I	I
[4.2.5]	Software test reports	System Supplier		I **(1)**	I **(1)**
[4.2.6]	System test report	System Supplier		I **(1)**	I **(1)**
[4.2.7]	Factory Acceptance Test (FAT) program	System Supplier		A	A
[4.2.7]	FAT report	System Supplier		I	I
[4.2.7]	Additional FAT docs. (e.g. user manual)	System Supplier		I **(1)**	I **(1)**
[4.2.8]	Management of change procedure	System Supplier		I **(1)**	I **(1)**

(1) Upon request
Note 1: A = to be submitted for approval, I = to be submitted for information

Table 4 : Summary of documentation submittal by the Systems Integrator

Item		Responsible role	System category		
Reference	Document		Cat I	Cat II	Cat III
[4.3.2]	Quality plan	Systems Integrator		I **(1)**	I **(1)**
[4.3.3]	List of system categorisations	Systems Integrator	A **(1)**	A **(1)**	A **(1)**
[4.3.4]	Risk assessment report	Systems Integrator	A **(1)**	A **(1)**	A **(1)**
[4.3.5]	Ship's system architecture	Systems Integrator	I **(1)**	I **(1)**	I **(1)**
[4.3.6]	System Acceptance Test (SAT) program	Systems Integrator		A	A
[4.3.6]	SAT report	Systems Integrator		I	I
[4.3.7]	System of System Test (SOST) program	Systems Integrator		A	A
[4.3.7]	SOST report	Systems Integrator		I	I
[4.3.8]	Change management procedure for software	Systems Integrator		I **(1)**	I **(1)**

(1) Upon request
Note 1: A = to be submitted for approval, I = to be submitted for information

1.7 Test witnessing and survey

1.7.1 Tab 5 summarises the activities that are to be witnessed or surveyed by the Society. The responsible role is to facilitate the activity.

Table 5 : Summary of test witnessing and survey

Item		Responsible role	System category		
Reference	Document		Cat I	Cat II	Cat III
[4.2.7]	FAT witnessing	System Supplier	–	X	X
[4.3.6]	SAT witnessing	Systems Integrator	–	X	X
[4.3.7]	SOST witnessing	Systems Integrator	–	X	X
[6.12]	Verification of changes	Systems Integrator	–	X	X
Note 1: x = witnessing required, - = witnessing not required.					

2 Approval of system and components

2.1 System certification

2.1.1 Computer-based systems that are necessary to accomplish ship-functions of Category II or Category III (as defined in [3.1]) are to be delivered with a ship-specific Society certificate. The objective of the ship-specific system certification is to confirm that design and manufacturing of the system has been completed and that the system complies with applicable rules of the Society.

2.1.2 Ship-specific system certification consist of two main verification activities:

- Assessment of ship-specific documentation (see [4.2] and [6])
- Survey and testing of the system to be delivered to the ship (see [4.2.7]).

The Society may accept Alternative Survey Scheme (BV Mode I) as per NR320, Sec 3 provided that the requirements are met, and that the system is provided with a ship-specific certificate.

Note 1: NR320 Certification Scheme of Materials and Equipment for the Classification of Marine Units.

2.2 Type approval of computer-based systems

2.2.1 Computer-based systems that are routinely manufactured and include standardized software functions may be type approved in accordance with specified rules of the Society. Hardware is to be documented according to the requirement in [4.2.4].

2.2.2 The type approval consist of two main verification activities:

- assessment of type-specific documentation
- survey and testing of the standardised functions.

2.2.3 Type approval will normally not yield exemption from ship-specific system certification since ship-specific functions, parameter configurations and installation elements demand ship-specific verification.

3 System categories

3.1 System category definitions

3.1.1 The categorisation of a system in the context of this Section is based on the potential severity of the consequences if the system serving the function fails. Tab 6 provides the definitions of the categories.

Table 6 : System categories

Category	Failure effects	Typical System functionality
I	Those systems, failure of which will not lead to dangerous situations for human safety, safety of the ship and/or threat to the environment	• Monitoring, informational and administrative functions
II	Those systems, failure of which could eventually lead to dangerous situations for human safety, safety of the ship and/or threat to the environment	• Ship alarm, monitoring and control functions which are necessary to maintain the ship in its normal operational and habitable conditions
III	Those systems, failure of which could immediately lead to dangerous or catastrophic situations for human safety, safety of the ship and/or threat to the environment	• Control functions for maintaining the ship's propulsion and steering • Ship safety functions

3.2 Scope of verification by the Society

3.2.1 Information pertinent to category I systems is required upon request to determine the correct category or ensure that they do not influence the operation of systems in category II and category III.

Note 1: Cat I systems are normally not subject to verification by the Society, as failure of these systems is not to lead to dangerous situations.

3.3 System category examples

3.3.1 The category of a system is to be evaluated in the context of the specific ship in question; thus, the categorisation of a system may vary from one ship to the next. For determining the categorisation of systems for a specific ship, see [4.3.3].

Note 1:

- Examples of category I systems: Fuel monitoring system, maintenance support system, diagnostics and troubleshooting system, closed circuit television, cabin security, entertainment system, fish detection system.
- Examples of category II systems: Fuel oil treatment system, alarm monitoring and safety systems for propulsion and auxiliary machinery, Inert gas system, control, monitoring and safety system for cargo containment system.
- Examples of category III systems: Propulsion control system, steering gear control system, electric power system (including power management system), dynamic positioning system (IMO classes 2 and 3).

The list of example systems is not exhaustive.

4 Requirements on development and certification of computer-based system

4.1 General requirement

4.1.1 Life cycle approach with appropriate standards

A global top-down approach is to be undertaken in the design and development of both hardware and software and the integration in sub-systems, systems, and system of systems, spanning the complete system lifecycle. This approach is to be based on the standards as listed in this Section or other standards recognised by the Society.

Verification: This is verified by the Society as a part of the quality management system verification described in [4.1.2].

4.1.2 Quality management system

Systems Integrators and System Suppliers are to, in the development of computer-based systems for category II and category III, comply to a recognised quality standard such as ISO 9001:2015; also incorporating principles of IEEE/ISO/IEC 90003:2018.

The quality management system are to include the topics as per Tab 7, applicable for both category II and category III systems.

Verification: The quality management system may be verified by the Society by two alternative means:

a) The Society confirming that the quality management system is certified as compliant to a recognised standard by an organisation with accreditation under a national accreditation scheme.

b) The Society confirming compliance to a standard through a specific assessment of the quality management system. The documentation requirements is to be defined on a case-by-case basis.

Table 7 : Quality management system

Area		Role	
No.	Topic	System Supplier	Systems Integrator
1	Responsibilities and competency of the staff	X	X
2	The complete lifecycle of delivered software and of associated hardware	X	X
3	Specific procedure for unique identification of a computer-based system, its components and versions	X	
4	Creation and update of the ship's system architecture		X
5	Organisation set in place for acquisition of software and related hardware from suppliers	X	X
6	Organisation set in place for software code writing and verification	X	
7	Organisation set in place for system validation before integration in the ship	X	
8	Specific procedure for conducting and approving of systems at FAT and SAT	X	X
9	Creation and update of system documentation	X	
10	Specific procedure for software modification and installation on board the ship, including interactions with Shipyard and Owner	X	X
11	Specific procedures for verification of software code	X	
12	Procedures for integrating systems with other systems and testing of the system of systems for the ship	X	X
13	Procedures for managing changes to software and configurations before FAT	X	
14	Procedures for managing and documenting changes to software and configurations after FAT	X	X
15	Checkpoints for the organisation's own follow-up of adherence to the quality management system	X	X

4.2 Requirements on the System Supplier

4.2.1 Define and follow a quality plan

The System Supplier is to document that the quality management system is applied for the design, construction, delivery, and maintenance of the specific system to be delivered.

All applicable items described in [4.1.2] (for the System Supplier role) are to be demonstrated to exist and being followed, as relevant.

Verification:

- The quality plan for category I systems is not required.
- The quality plan for category II and III systems is to be available during survey (FAT) or submitted for information upon request.

4.2.2 Unique identification of systems and software

A method for unique identification of a system, its different software components and different revisions of the same software component are to be applied. The method is to be applied throughout the lifecycle of the system and the software.

See also [7.1] for related technical requirements on the system in question.

The documentation of the method is typically a part of the quality management system, see [4.1.2].

Verification:

- The unique identification of the category I systems is not required.
- The application of the identification system for category II and III is verified as a part of the FAT (see [4.2.7]) and SAT (see [4.3.6]).

4.2.3 System description

The system's specification and design is to be determined and documented in a system description. In addition to serve as a specification for the detailed design and implementation, the purpose of the system description is to document that the entire system-delivery is according to the specifications and in compliance with applicable rules and regulations.

The system description is to contain information of the following:

- Purpose and main functions, including any safety aspects
- System category as defined
- Key performance characteristics
- Compliance with the technical requirements and Society rules
- User interfaces/mimics
- Communication and Interface aspects
  - Identification and description of interfaces to other ship systems
- Hardware-arrangement related aspects:
  - Network-architecture/topology, including all network components like switches, routers, gateways, firewalls, etc.
  - Internal structure with regards to all interfaces and hardware nodes in the system (e.g. operator stations, displays, computers, programmable devices, sensors, actuators, I/O modules, etc).
  - I/O allocation (mapping of field devices to channel, communication link, hardware unit, logic function)
  - Power supply arrangement
  - Failure mode description.

Note 1: The system description may be divided into a number of different documents and models.

Verification:

- For category I systems, the system description documentation is to be submitted for information upon request.
- For category II and III, the system description documentation is to be submitted for approval.

4.2.4 Environmental compliance of hardware components

Evidence of environmental type testing according to Ch 3, Sec 6, [2] regarding hardware elements included in the system and sub-systems is to be submitted to the Society.

Verification:

- For category I systems, submitting evidence of environmental type testing is not mandatory. Reference to Type approval certificate or other evidence of type testing is to be submitted for information upon request, see [3.2].
- For category II and III, the reference to Type approval certificate or other evidence of type testing is to be submitted to the Society for information.

4.2.5 Software code creation, parameterisation, and testing

The software created, changed, or configured for the delivery project is to be developed and have the quality assurance activities assessed according to the selected standard(s) as described in the quality plan.

The quality assurance activities may be performed on several levels of the software-structure and are to include both custom-made software and configured components (e.g. software libraries) as appropriate.

The verification of the software is to verify the following aspects based on black-box methods:

- Correctness, completeness and consistency of any parametrisation and configuration of software components
- Intended functionality
- Intended robustness.

For components in systems of category II and III, the scope, purpose, and results of all performed reviews, analyses, tests, and other verification activities are to be documented in test reports.

Note 1: Some of the methods utilised in this activity are sometimes referred to as “software unit test” or “developer test” and may also include verification methods like code reviews and static or dynamic code analysis.

Verification:

- For category I systems, no documentation is required.
- For category II and III, software test reports are to be upon request submitted to the Society for information.

4.2.6 Internal system testing before FAT

The system is to be as far as practicable tested before the FAT. The main purpose of the system test is for the System Supplier to verify that the entire system delivery is according to the specifications, approved documentation and in compliance with applicable rules and regulations; and further, that the system is complete and ready for the FAT.

The testing is to verify the following aspects of the system:

- functionality
- effect of faults and failures (including diagnostic functions, detection, alerts response)
- performance
- integration between software and hardware components
- human-machine interfaces
- interfaces to other systems.

Faults are to be simulated as realistically as possible to demonstrate appropriate system fault detection and system response.

Some of the testing may be performed by utilising simulators and replica hardware.

The test-environment is to be documented, including a description of any simulators, emulators, test-stubs, test-management tools, or other tools affecting the test environment and its limitations.

Test cases and test results are to be documented in test programs and test reports respectively.

Verification:

- For category I systems, no documentation is required.
- For category II and III systems, internal system test report are to be made available during FAT or submitted upon request for information.

4.2.7 Factory acceptance testing (FAT) before installation on board

A Factory Acceptance Test (FAT) is to be arranged for the system in question. The main purpose of the FAT is to demonstrate to the Society that the system is completed and compliant with applicable classification rules, thus enabling issuance of a Society Certificate for the system.

The FAT test program is to cover a representative selection of the test items from the internal system test (described in [4.2.6]), including normal system functionality and response to failures.

For category II and III systems, network testing to verify the network resilience requirements in [7.2.1] is to be performed. If agreed by all parties, the network testing may be performed as a part of the system test on board the ship.

As a rule, the FAT is to be performed with the project specific software operating on the actual hardware components to be installed on board, with necessary means for simulation of functions and failure responses. Other solutions such as replica hardware or simulated hardware (emulators) may be agreed with the Society.

For each test-case it is to be noted if the test is passed or failed, and the test-results are to be documented in a test report. The test report is to also contain a list of the software (including software versions) that were installed in the system when the test was executed.

Note 1: For complex systems there may be a large difference in scope between the “Internal system testing before FAT” activity and the FAT, while for some systems the scope may be identical.

Verification:

- For category I systems, FAT not required.
- For category II and III systems, the FAT program is to be approved before the test is executed. The FAT execution is to be witnessed by the Society. The FAT report is to be submitted to the Society for information.

Additional FAT documentation including, e.g. user manuals and internal system test report, is to be made available during FAT or submitted upon request for information.

4.2.8 Secure and controlled software installation on the ship

The initial installation and subsequent updates of the software components of the system are to be done according to a management of change procedure which has been agreed between the System Supplier and the Systems Integrator.

The management of change procedure is to comply with the requirements in [6].

Cyber security requirements are to be applied as defined in NR659, Ch 5, Sec 2, [6.3.5].

Verification:

- For category I systems, no management of change documentation is required.
- For category II and III systems, the management of change procedure is to be submitted for information upon request.

4.3 Requirements on the Systems Integrator

4.3.1 Responsibilities

For the purposes of this Section, the Shipyard is considered as the Systems Integrator in the development and delivery phase unless another organisation or person is explicitly appointed by the Shipyard.

4.3.2 Define and follow a quality plan

The Systems Integrator is to document that the quality management system is applied for the installation, integration, completion, and maintenance of the systems to be installed on board. All applicable items described in [4.1.2] (for the Systems Integrator role) are to be demonstrated to exist and being followed, as relevant.

Verification:

- For category I systems, no documentation is required.
- For category II and III systems, the quality plan is to be made available during survey (at SAT/SOST) or upon request submitted for information.

4.3.3 Determining the category of the system in question

For each system delivery to a particular ship, it is to be decided which category the system falls under based on the failure effects of the system (as defined in [3]). The category for a specific system is to be conveyed to the relevant System Supplier. The Society may decide that a risk-assessment is needed to verify the proper system category.

Verification:

- For category I, II and III systems, the category for the different systems is to be upon request documented and submitted for approval.

4.3.4 Risk assessment of the system

If requested by the Society, a risk assessment of a specific system in context of the specific ship in question is to be performed and documented in order to determine the applicable category for the system.

Note 1: IEC/ISO31010 “Risk management - Risk assessment techniques” may be used as guidance in order to determine method of risk assessment.

Verification:

- For category I, II and III systems, the risk assessment report is to be upon request submitted for approval.

4.3.5 Define the ship’s system-architecture

The System of Systems (SoS) is to be specified and documented. This architecture specification provides the basis for category determination and development of the different integrated systems by allocating functionality to individual systems and by identifying the main interfaces between the systems. It is also to serve as a basis for the testing of the integrated systems on the ship level (see [4.3.7]).

The ship’s system architecture is to at least contain description of:

- Overview of the total systems architecture (the system of systems)
- Each system’s purpose and main functionality
- Communication and interface aspects between different systems.

Note 1: See also NR659, Ch 3, Sec 2 for diagram of security zones and conduits.

Verification:

- For category I, II, and III systems, the ship’s system architecture is to be upon request submitted to the Society for information.

4.3.6 System acceptance test (SAT) on board the ship

A system acceptance test (SAT) is to be arranged on board the ship. The main purpose of the system acceptance test (SAT) is to verify the system functionality, after installation and integration with the applicable machinery/electrical/process systems on board including possible interfaces with other control and monitoring systems.

For each test-case it is to be noted if the test is passed or failed, and the test-results are to be documented in a test report. The test report is to also contain a list of the software (including software versions) that were installed in the system when the test was executed.

Verification:

- For category I systems, the SAT is not required.
- For category II and III systems, the SAT program is to be submitted for approval before the test is executed.

The SAT execution is to be witnessed by the Society. The SAT report is to be submitted to the Society for information.

4.3.7 Testing of integrated systems on ship-level (SOST)

Integration tests are to be conducted after installation and integration of the different systems in its final environment on board. The purpose of the tests is to verify the functionality of the complete installation (system of systems) including all interfaces and inter-dependencies in compliance with requirements and specifications.

The testing is to verify the following aspects of the system of systems:

- overall functionality of the interacting systems as a whole
- failure response between systems
- performance
- human-machine interfaces
- interfaces between the different systems.

Note 1: For complex systems there may be a large difference in scope between the "System acceptance test (SAT) on board the ship" activity and the SOST, while for some systems the scope may be overlapping or identical. It is possible to combine the two activities into one when the test scope is similar.

Verification:

- For category I systems, the testing of integrated systems on ship-level (SOST) is not required.
- For category II and III systems, the SOST program is to be submitted to the Society for approval before the test is executed.

The SOST execution is to be witnessed by the Society. The SOST report is to be submitted to the Society for information.

4.3.8 Change management

The Systems Integrator is to follow procedures for management of change to the system as described in [6].

Verification:

- For category I systems, the management of change procedure is not required.
- For category II and III systems, the management of change procedure is to be upon request submitted to the Society for information.

5 Requirements on maintenance of computer-based systems

5.1 Requirements on the Owner

5.1.1 Responsibilities

For the purposes of this Section, the Owner is considered to be the Systems Integrator in the operations phase unless another organisation or person is explicitly appointed by the Owner.

Accordingly, the Society is to be informed in a timely manner by the Owner about the appointed Systems Integrator who is responsible for implementing any changes to the systems in conjunction with System Supplier(s).

5.2 Requirements on the Systems Integrator

5.2.1 Change management

The Systems Integrator is to ensure that necessary procedures for software and hardware change management exist on board, and that any software modification/upgrade are performed according to the procedure(s). For details about change management, see [6].

Changes to computer-based systems in the operational phase is to be recorded.

The records are to contain information about the relevant software versions and other relevant information as described in [6.1.1].

Verification:

- For category I systems, the documentation about the change management is not required.
- For category II and III systems, see [6.12].

5.3 Requirements on the System Supplier

5.3.1 Change management

The System Supplier is to follow procedures for maintenance of the system including procedures for management of change as described in [6].

Verification:

- For category I systems, the documentation about the change management is not required.
- For category II and III systems, see [6.12].

5.3.2 Testing of changes before installation on board

The System Supplier is to make sure that the planned changes to a system have passed relevant in-house tests before the change is made to systems on board.

Verification:

- For category I systems, no documentation about testing of changes before installation on board is required.
- For category II and III, see [6.12].

6 Management of change

6.1 General

6.1.1 This Article provides requirements for the management of change throughout the lifecycle of a computer-based system. Different procedures for the management of change may be defined for specific phases in a system's lifecycle as the different phases typically involve different stakeholders. The Society's verification is described in [6.12].

6.2 Documented change management procedures

6.2.1 The organisation in question is to define and document change management procedures applicable for the computer-based system in question covering both hardware and software. After FAT, the System Supplier is to manage all changes to the system in accordance with the procedure. Examples could be qualification of new versions of acquired software, new hardware, modified control logic, changes to configurable parameters.

The procedure(s) are to describe the activities listed in [6.3] through [6.11]. The outcome of the impact analysis in [6.8] determines to what extent the activities in [6.3] to [6.12] are to be performed. Change records (described in [6.11]) are to be always produced.

6.3 Agreement between relevant stakeholders

6.3.1 The management of change process is to be coordinated and agreed between the relevant stakeholders along the different stages of the lifecycle of the computer-based system.

Note 1: Typically, the management of change address at least three different stages:

- Development and internal verification before FAT involving the System Supplier and sub-suppliers.
- From FAT to handover of the ship to the Owner involving the System Supplier, the Systems Integrator, the Society, and the Owner.
- In operation involving the System Supplier, Service Suppliers, the Owner, and the Society.

6.4 Approved software to be under change management

6.4.1 If changes are required to a system after it has been approved by applicable stakeholders (typically the Systems Integrator and the Society at FAT) the modifications are to follow defined change management procedures.

6.5 Unique identification of system and software versions

6.5.1 The System Supplier is to make sure that each system and software version is uniquely identifiable, see [4.2.2].

6.6 Handling of software master files

6.6.1 There are to be defined mechanisms for handling of the files that constitute the master-files for a software component. Personnel authorities are to be clearly defined along with the tools and mechanisms used to ensure the integrity of the master files.

6.7 Backup and restoration of onboard software

6.7.1 It is to be clearly defined how to perform backup and restoration of the software components of a computer-based system on board the ship.

6.8 Impact analysis before change is made

6.8.1 Before a change to the system is made, an impact analysis is to be performed in order to determine:

- Criticality of the change
- Impact on existing documentation
- Needed verification and test activities
- Need to inform other stakeholders about the change
- Need to obtain approval from other stakeholders (e.g. Society and/or Owner) before the change is made.

6.9 Roll-back in case of failed software changes

6.9.1 When maintenance includes installation of new versions of the software in the system, it is to be possible to perform a rollback of the software to the previous installed version with the purpose of returning the system to a known, stable state.

Roll-backs are to be documented and analysed to find and eliminate the root cause.

6.10 Verification and validation of system changes

6.10.1 To the largest degree practically possible, modifications are to be verified before being installed on board.

After installation, the modification(s) are to be verified on board according to a documented verification program containing:

- Verification that the new functionalities and/or improvements have had the intended effect
- Regression test to verify that the modification has not had any negative effects on functionality or capabilities that was not expected to be affected.

6.11 Change records

6.11.1 Changes to systems and software are to be documented in change records to allow for visibility and traceability of the changes. The change records are to contain at least the following items:

- The purpose for a change
- A description of the changes and modifications
- The main conclusions from the impact analysis (see [6.8])
- The identity and version of any new system or software version(s) (see [6.5])
- Test reports or tests summaries (see [6.10]).

Documentation of the changes to software may be recorded in the planned maintenance system (PMS), in a software registry or equivalent.

6.12 Verification of change management by the Society

6.12.1 During newbuilding

The verification of management of change in the newbuilding phase is divided into two parts:

- Procedures are verified as a part of the verification of the quality management system as per [4.1.2]
- Project specific implementation of the procedures are verified during FAT (see [4.2.7]), SAT (see [4.3.6]) and SOST (see [4.3.7]) activities.

7 Technical requirements on computer-based systems

7.1 Reporting of system and software identification and version

7.1.1 System identification

The system is to provide means to identify its name, version, identifier, and manufacturer.

Note 1: It is recommended that the system can automatically report the status of its software to a ship software logging system (SSLS) as specified in the international standard ISO 24060.

7.2 Data links

7.2.1 General requirements for category II and III systems

Loss of a data link is to be specifically addressed in risk assessment analysis/FMEA, refer to [4.2.3].

a) A single failure in data link is not to cause loss of ship-functions of category III. Any effect of such failures is to meet the principle of fail safe for the ship-function(s) being served.

b) For ship-functions of category II and III, any loss of functionality in the remote control system is to be compensated for by local/manual means.

c) The data link is to have means to prevent or cope with excessive communication rates.

d) Data links are to be self-checking, detecting failures or performance issues on the link itself and data communication failures on nodes connected to the link

e) Detected failures are to initiate an alarm.

7.2.2 Specific requirements for wireless data links

Category III systems are not to use wireless data links unless specifically considered by the Society on the basis of an engineering analysis carried out in accordance with an International or National Standard acceptable to the Society.

Other categories of systems may use wireless data links with the following requirements:

- Recognised international wireless communication system protocols are to be employed, incorporating:
  - Message integrity. Fault prevention, detection, diagnosis, and correction so that the received message is not corrupted or altered when compared to the transmitted message.
  - Configuration and device authentication. Are only to permit connection of devices that are included in the system design.
  - Message encryption. Protection of the confidentiality and or criticality of the data content.
  - Security management. Protection of network assets, prevention of unauthorized access to network assets.
- The internal wireless system within the ship are to comply with the radio frequency and power level requirements of International Telecommunication Union and flag state requirements.
- Consideration should be given to system operation in the event of port state and local regulations that pertain to the use of radio-frequency transmission prohibiting the operation of a wireless data communication link due to frequency and power level restrictions.
- For wireless data communication equipment, tests during harbour and sea trials are to be conducted to demonstrate that radio-frequency transmission does not cause failure of any equipment and does not self-fail as a result of electromagnetic interference during expected operating conditions.

7.2.3 Essential services

Loss of a data communication link is not to affect the ability to operate essential services by alternative means.

7.2.4 Automatic start

The data communication links for category II and III systems are to be automatically started when power is turned on, or restarted after loss of power.

7.2.5 Transmission cables for category II and III systems

The choice of transmission cable is to be made according to the environmental conditions. Particular attention is to be given to the level characteristics required for electromagnetic interferences.

The installation of transmission cables is to comply with the requirements stated in Ch 2, Sec 11. In addition, the routing of transmission cables is to be chosen so as to be in less exposed zones regarding mechanical, chemical or EMI damage. As far as possible, the routing of each cable is to be independent of any other cable. These cables are not normally allowed to be routed in bunches with other cables on the cable tray.

7.2.6 Coupling devices for category II and III systems

The coupling devices are to be designed, as far as practicable, so that in the event of a single fault, they do not alter the network function. When a failure of a coupling device occurs, an alarm is to be activated.

Addition of coupling devices is not to alter the network function.

Hardware connecting devices are to be chosen, when possible, in accordance with international standards.

When a computer based system is used with a non-essential system and connected to a network used for essential systems, the coupling device is to be of an approved type.

7.3 Verification of technical requirements by the Society

7.3.1 The implementation of the technical requirements provided in [7] is verified by the Society as part of the system description, FAT and SAT, described respectively in [4.2.3], [4.2.7], and [4.3.6].

7.4 Requirements for hardware regarding construction

7.4.1 General

The construction of systems is to comply with the requirements of Ch 3, Sec 4.

7.4.2 Housing

a) The housing of the system is to be designed to protect the printed circuit board and associated components from the environmental conditions, as defined in Ch 2, Sec 2, [1], in which it will be installed. When required, the cooling system is to be monitored, and an alarm is to be activated when the normal temperature is exceeded.

b) The mechanical construction is to be designed to withstand the vibration levels defined in Ch 2, Sec 2 depending on the applicable environmental condition.

7.5 Response time

7.5.1 The response time between the detection of an event and the related action or signalization is to be compatible with the application. As a general requirement without other specification, this time is to be less than 5 seconds.

7.6 Human-Machine Interface (HMI)

7.6.1 Ergonomic design

The design of the operator interface is to follow ergonomic principles. The standard IEC 60447:2004 Man-machine interface or equivalent recognized standard may be used.

7.6.2 Alarms

Means are to be provided to verify the activity of the system, or subsystem, and its proper function.

A visual and audible alarm is to be activated in the event of malfunction of the system, or subsystem. This alarm is to be such that identification of the failure is simplified.

7.6.3 Input devices - General requirements

Input devices are to be positioned such that the operator has a clear view of the related display. The operation of input devices, when installed, is to be logical and correspond to the direction of action of the controlled equipment.

7.6.4 Input devices - Conflicting control inputs

Control of essential functions is only to be available at one control station at any time. Failing this, conflicting control commands are to be prevented by means of interlocks and/or warnings.

7.6.5 Input devices - Confirmation and validity of input

The user is to be provided with positive confirmation of action. When keys are used for common/important controls, and several functions are assigned to such keys, the active function is to be recognisable. Means are to be provided to check validity of the manual input data into the system (e.g. checking the number of characters, range value, etc.).

7.6.6 Input devices - Protection against inadvertent activation

If use of a push button may have unwanted consequences, provision is to be made to prevent an instruction from being executed by a single action (e.g. simultaneous use of two push buttons, repeated use of push buttons, etc.). Alternatively, this push button is to be protected against accidental activation by a suitable cover, or use of a pull button, if applicable.

7.6.7 Output devices

Video display units (VDU's) and other output devices are to be suitably lighted and dimmable when installed in the wheelhouse. The adjustment of brightness and colour of VDU's is to be limited to a minimum discernible level.

When VDU's are used for alarm purposes, the alarm signal, required by the Rules, is to be displayed whatever the other information on the screen. The alarms are to be displayed either

- according to the sequence of occurrence, or
- in order of priority as per IEC 62923-1:2018, or
- in order of priority as per other recognised standards at the discretion of the Society.

Note 1: IEC 62923-1:2018 "Maritime navigation and radiocommunication equipment and systems - Bridge alert management - Part 1: Operational and performance requirements, methods of testing and required test results"

Note 2: When displaying alarms as per IEC 62923-1:2018, the alarms are grouped by the display priorities. Within the groups the alarms are ordered by the time of the last state change and the most recent alarms are placed on top."

When alarms are displayed on a colour VDU, it is to be possible to distinguish alarm in the event of failure of a primary colour.

The position of the VDU is to be such as to be easily readable from the normal position of the personnel on watch. The size of the screen and characters is to be chosen accordingly.

When several control stations are provided in different spaces, an indication of the station in control is to be displayed at each control station. Transfer of control is to be effected smoothly and without interruption to the service.

7.6.8 Workstations

The number of workstations at control stations is to be sufficient to ensure that all functions may be provided with any one unit out of operation, taking into account any functions which are required to be continuously available.

Multifunction workstations for control and display are to be redundant and interchangeable.

The choice of colour, graphic symbols, etc. is to be consistent in all systems on board.

7.6.9 Computer dialogue

The computer dialogue is to be as simple and self-explanatory as possible. The screen content is to be logically structured and show only what is relevant to the user. Menus are to be organised so as to have rapid access to the most frequently used functions.

Means to go back to a safe state are to be always accessible.

A clear warning is to be displayed when using functions such as alteration of control condition, or change of data or programs in the memory of the system.

A "wait" indication is to warn the operator when the system is executing an operation.

7.7 Integrated systems

7.7.1 Integrated system is a system consisting of two or more subsystems having independent functions connected by a data transmission network and operated from one or more workstations. Operation with an integrated system is to be at least as effective as it would be with individual, stand alone equipment.

7.7.2 Failure of one part (individual module, equipment or subsystem) of the integrated system is not to affect the functionality of other parts, except for those functions directly dependent on information from the defective part.

7.7.3 A failure in connection between parts, cards connections or cable connections is not to affect the independent functionality of each connected part.

7.7.4 Alarm messages for essential functions are to have priority over any other information presented on the display.

8 Additional service feature SW-Registry

8.1 Software registry

8.1.1 Software registry is a detailed manual about the software and related hardware elements deployed on a specific ship. The additional service feature **SW-Registry** is assigned in accordance to Pt A, Ch 1, Sec 2, [4.16.16] to ships provided with a software registry meeting the requirements of the present Article.

8.1.2 The software registry is composed of the four following parts:

- software inventory as explained in [8.2]
- logical map of networks as explained in [8.3]
- inventory of integrated systems components as explained in [8.4]
- cyber security events as explained in [8.5].

8.1.3 Initial release of software registry is to be submitted for information to the Society after ship sea trials.

8.2 Software inventory

8.2.1 The software inventory is a part of the software registry.

8.2.2 The responsibilities of each parties are detailed hereafter:

a) Systems Supplier is to deliver a software inventory for their equipment.

b) Systems Integrator is to verify equipment compliance with delivered software inventory from the Systems Supplier. Verification may be done in a passive way or in an active way by using discovery tools to identify software on a single equipment or to identify network connected devices within systems. If software inventory is missing, the Systems Integrator is to write it. Systems Integrator ensures software inventory revision by adding any supplied equipment during integration.

c) Owner is to maintain software inventory delivered by the Systems Integrator. If missing, this document is to be established by the Owner.

8.2.3 The software inventory may be in a digital format, e.g. spreadsheet file. The software inventory is to contain the elements described in [8.2.4] to [8.2.7].

8.2.4 Global information

The software inventory is to be structured per equipment and is to contain:

- equipment name, brand, model or reference, supplier name, function and global version
- history of changes with dates, actors and motivations.

8.2.5 Operating system related information

If an equipment has multi, dual-boot system, each operating system is to be considered.

About operating system, the following information is to be delivered:

- operating system distribution name, editor's name, global version
- operating system detailed version (applied CVE should be listed)
- operating system installed desktop applications, relevant versions are to be applied)
- operating system installed system services, relevant versions are to be applied)
- license number.

8.2.6 Desktop applications related information

A desktop application is a software deployed in the onboard hardware to run without the use of any incoming connections through listening interface.

The following information are to be delivered regarding desktop applications:

- software name and publisher
- installation date, version number and motivations
- local and remote roles
- generic accounts
- dedicated accounts
- access control list with read, write and execution rights
- when existing, outgoing connections are to be considered (IP/Ports destination). If unknown, information is to be identified as "missing"
- license number.

8.2.7 Network services related information

Network service is software deployed in the onboard hardware to run with the use of incoming connections through listening interface (e.g. called ports for TCP/IP) over the network or any serial connection.

In addition to the information listed in [8.2.6] the following information is to be delivered.

For IP based Services:

- protocol name and version
- listening ports
- motivation for ports listening

For Non/IP based Services:

- listening interface
- motivation for interface listening.

8.3 Logical map of networks

8.3.1 The logical map of networks is part of the software registry.

8.3.2 The logical map represents the logical topology of networks, e.g. IP and non-IP addressing scheme, subnet names, logical links, principal devices in operation. The logical map can be organised in the form of inventories and a corresponding diagram.

8.3.3 Logical inventories

a) List of IP address ranges with the following information defined for each entry:
   - the list of switches concerned
   - the functional description of the IP range
   - the list of Dynamic Host Configuration Protocol (DHCP) servers, relevant IP address management plan and IP history recording policy
   - the list of equipment MAC address
   - interconnections with other ranges
   - flow matrix with source, destination, IP, ports, service, motivation, roles, volume estimation and time windows if any

b) List of non-IP networks with the following information defined for each network:
   - the list of MAC (Media Access Control) addresses or addresses specific to the industrial protocols on the network
   - the list of switches concerned
   - functional description of the network
   - devices connected to other networks (connectors)

c) List of non-Ethernet access points with the following information defined for each entry:
   - the list of access ports
   - addressing, if there is a special protocol
   - the list of connected devices

d) List of logical servers and desktops with the following information defined for each entry, if applicable:
   - IP addressing (network, mask, gateway)
   - operating system version
   - underlying physical server
   - applications and their versions
   - services and versions

e) List of connectors and communicating field devices (remote I/O, smart sensors, smart actuators, etc.) with, for each one:
   - IP addressing (network, mask, gateway), the associated MAC addressing and network or the specific addressing, if appropriate
   - applications.

8.3.4 Diagram

The diagram is to present the IP ranges (networks and sub-networks), their interconnections and is to demonstrate:

- functional description of the IP range
- interconnections with other ranges
- routers, switches and firewalls
- security devices (e.g. intrusion detection systems).

Note 1: In particular, this map should show connections to external networks, e.g. shore hosts of service providers, and all connections to the Internet.

8.4 Inventory of integrated systems components

8.4.1 The inventory of integrated systems components is a part of the software registry.

8.4.2 Physical inventories

The list of communicating devices is to be included. For each element the following information is to be specified:

- name, brand, model or reference (some devices (e.g. modular PLCs) contain several references
- the version of the embedded firmware (software version) and the product version if appropriate
- physical characteristics, if appropriate
- physical location (building, room, cabinet, bay)
- list of switches connected.

Note 1: For example, the list may include PLCs, remote I/O, sensors, actuators, variable speed drives, meters, circuit breakers, switches, physical servers, desktops and storage units.

The list of network communication devices is to be included, e.g. for switches, routers and protocol gateways. For each device the following information is to be specified:

- brand, model and reference
- embedded firmware version
- physical location (building, room, cabinet, bay).

For Ethernet switches the Virtual Local Area Network (VLAN) numbers for each port are to be specified.

8.4.3 Diagram

This is a representation of the various locations, showing:

- switches, associated VLAN numbers
- links between devices
- firewall and relevant rules
- passive and active network based cyber security equipment
- for remote connections, interconnection identifiers if any (MultiProtocol Label Switching (MPLS) or Virtual Private LAN Service (VPLS))
- any other relevant devices.

8.5 Cyber security events

8.5.1 Cyber security events as defined in NR659 are to be recorded in the software registry including, but not limited to:

- Results of the scans: Prior to installation, all artefacts, software code, executables and the physical medium used for installation on the ship are to be scanned for viruses and malicious software. Results of the scan are to be documented and kept with the software registry.

Section 4 Constructional Requirements

1 General

1.1 General

1.1.1 Automation systems are to be so constructed as:

- to withstand the environmental conditions, as defined in Ch 2, Sec 2, [1], in which they operate
- to have necessary facilities for maintenance work.

1.2 Materials

1.2.1 Materials are generally to be of the flame-retardant type.

1.2.2 Connectors are to be able to withstand standard vibrations, mechanical constraints and corrosion conditions as given in Ch 3, Sec 6.

1.3 Component design

1.3.1 Automation components are to be designed to simplify maintenance operations. They are to be so constructed as to have:

- easy identification of failures
- easy access to replaceable parts
- easy installation and safe handling in the event of replacement of parts (plug and play principle) without impairing the operational capability of the system, as far as practicable
- facility for adjustment of set points or calibration
- test point facilities, to verify the proper operation of components.

1.4 Environmental and supply conditions

1.4.1 The environmental and supply conditions are specified in Ch 3, Sec 1. Specific environmental conditions are to be considered for air temperature and humidity, vibrations, corrosion from chemicals and mechanical or biological attacks.

2 Electrical and/or electronic systems

2.1 General

2.1.1 Electrical and electronic equipment is to comply with the requirements of Part C, Chapter 2 and Part C, Chapter 3.

2.1.2 A separation is to be done between any electrical components and liquids, if they are in a same enclosure. Necessary drainage will be provided where liquids are likely to leak.

2.1.3 When plug-in connectors or plug-in elements are used, their contacts are not to be exposed to excessive mechanical loads. They are to be provided with a locking device.

2.1.4 All replaceable parts are to be so arranged that it is not possible to connect them incorrectly or to use incorrect replacements. Where this not practicable, the replacement parts as well as the associated connecting devices are to be clearly identified. In particular, all connection terminals are to be properly tagged. When replacement cannot be carried out with the system on, a warning sign is to be provided.

2.1.5 Forced cooling systems are to be avoided. Where forced cooling is installed, an alarm is to be provided in the event of failure of the cooling system.

2.1.6 The interface connection is to be so designed to receive the cables required. The cables are to be chosen according to Ch 2, Sec 3.

2.2 Electronic system

2.2.1 Printed circuit boards are to be so designed that they are properly protected against the normal aggression expected in their environment.

2.2.2 Electronic systems are to be constructed taking account of electromagnetic interferences.

Special precautions are to be taken for:

- measuring elements such as the analogue amplifier or analog/digital converter; and
- connecting different systems having different ground references.

2.2.3 The components of electronic systems (printed circuit board, electronic components) are to be clearly identifiable with reference to the relevant documentation.

2.2.4 Where adjustable set points are available, they are to be readily identifiable and suitable means are to be provided to protect them against changes due to vibrations and uncontrolled access.

2.2.5 The choice of electronic components is to be made according to the normal environmental conditions, in particular the temperature rating.

2.2.6 All stages of fabrication of printed circuit boards are to be subjected to quality control. Evidence of this control is to be documented.

2.2.7 Burn-in tests or equivalent tests are to be performed.

2.2.8 The programmable components are to be clearly tagged with the program date and reference.

Components are to be protected against outside alteration when loaded.

2.3 Electrical system

2.3.1 Cables and insulated conductors used for internal wiring are to be at least of the flame-retardant type, and are to comply with the requirements in Part C, Chapter 2.

2.3.2 If specific products (e.g. oil) are likely to come into contact with wire insulation, the latter is to be resistant to such products or properly shielded from them, and to comply with the requirements in Part C, Chapter 2.

3 Pneumatic systems

3.1

3.1.1 Pneumatic automation systems are to comply with Ch 1, Sec 10, [17].

3.1.2 Pneumatic circuits of automation systems are to be independent of any other pneumatic circuit on board.

4 Hydraulic systems

4.1

4.1.1 Hydraulic automation systems are to comply with Ch 1, Sec 10, [14].

4.1.2 Suitable filtering devices are to be incorporated into the hydraulic circuits.

4.1.3 Hydraulic circuits of automation systems are to be independent of any other hydraulic circuit on board.

5 Automation consoles

5.1 General

5.1.1 Automation consoles are to be designed on ergonomic principles. Handrails are to be fitted for safe operation of the console.

5.2 Indicating instruments

5.2.1 The operator is to receive feed back information on the effects of his orders.

5.2.2 Indicating instruments and controls are to be arranged according to the logic of the system in control. In addition, the operating movement and the resulting movement of the indicating instrument are to be consistent with each other.

5.2.3 The instruments are to be clearly labelled. When installed in the wheelhouse, all lighted instruments of consoles are to be dimmable, where necessary.

5.3 VDU's and keyboards

5.3.1 VDU's in consoles are to be located so as to be easily readable from the normal position of the operator. The environmental lighting is not to create any reflection which makes reading difficult.

5.3.2 The keyboard is to be located to give easy access from the normal position of the operator. Special precautions are to be taken to avoid inadvertent operation of the keyboard.

Section 5 Installation Requirements

1 General

1.1

1.1.1 Automation systems are to be installed taking into account:

- the maintenance requirements (test and replacement of systems or components)
- the influence of EMI. The IEC 60533 standard is to be taken as guidance
- the environmental conditions corresponding to the location in accordance with Ch 2, Sec 1and Ch 2, Sec 3, [6].

1.1.2 Control stations are to be arranged for the convenience of the operator.

1.1.3 Automation components are to be properly fitted. Screws and nuts are to be locked, where necessary.

2 Sensors and components

2.1 General

2.1.1 Sensors are to be selected and located such that their output is a realistic measure of the parameter. Sensors are to be installed in places where there is a minimum risk for damage during normal overhaul and maintenance.

2.1.2 The enclosure of the sensor and the cable entry are to be appropriate to the space in which they are located.

2.1.3 Means are to be provided for testing, calibration and replacement of automation components. Such means are to be designed, as far as practicable, so as to avoid perturbation of the normal operation of the system.

2.1.4 A tag number is to identify automation components and is to be clearly marked and attached to the component. These tag numbers are to be collected on the instrument list mentioned in Ch 3, Sec 1, Tab 1.

2.1.5 Electrical connections are to be arranged for easy replacement and testing of sensors and components. They are to be clearly marked.

2.1.6 Low level signal sensors are to be avoided. When installed they are to be located as close as possible to amplifiers, so as to avoid external influences. Failing this, the wiring is to be provided with suitable EMI protection and temperature correction.

2.2 Temperature elements

2.2.1 Temperature sensors, thermostats or thermometers are to be installed in a thermowell of suitable material, to permit easy replacement and functional testing. The thermowell is not to significantly modify the response time of the whole element.

2.3 Pressure elements

2.3.1 Three-way valves or other suitable arrangements are to be installed to permit functional testing of pressure elements, such as pressure sensors, pressure switches, without stopping the installation.

2.3.2 In specific applications, where high pulsations of pressure are likely to occur, a damping element, such as a capillary tube or equivalent, is to be installed.

2.4 Level switches

2.4.1 Level switches fitted to flammable oil tanks, or similar installations, are to be installed so as to reduce the risk of fire.

3 Cables

3.1 Installation

3.1.1 Cables are to be installed according to the requirements in Ch 2, Sec 12, [7].

3.1.2 Suitable installation features such as screening and/or twisted pairs and/or separation between signal and other cables are to be provided in order to avoid possible interference on control and instrumentation cables.

3.1.3 Specific transmission cables (coaxial cables, twisted pairs, etc.) are to be routed in specific cable-ways and mechanically protected to avoid loss of any important transmitted data. Where there is a high risk of mechanical damage, the cables are to be protected with pipes or equivalent.

3.1.4 The cable bend radius is to be in accordance with the requirements of Ch 2, Sec 12, [7.2].

For mineral insulated cables, coaxial cables or fibre optic cables, whose characteristics may be modified, special precautions are to be taken according to the manufacturer's instructions.

3.2 Cable terminations

3.2.1 Cable terminations are to be arranged according to the requirements in Part C, Chapter 2. Particular attention is to be paid to the connections of cable shields. Shields are to be connected only at the sensor end when the sensor is earthed, and only at the processor end when the sensor is floating.

3.2.2 Cable terminations are to be able to withstand the identified environmental conditions (shocks, vibrations, salt mist, humidity, etc.).

3.2.3 Terminations of all special cables such as mineral insulated cables, coaxial cables or fibre optic cables are to be arranged according to the manufacturer's instructions.

4 Pipes

4.1

4.1.1 For installation of piping circuits used for automation purposes, see the requirements in Ch 1, Sec 10.

4.1.2 As far as practicable, piping containing liquids is not to be installed in or adjacent to electrical enclosures (see Ch 3, Sec 4, [2.1.2]).

4.1.3 Hydraulic and pneumatic piping for automation systems is to be marked to indicate its function.

5 Automation consoles

5.1 General

5.1.1 Consoles or control panels are to be located so as to enable a good view of the process under control, as far as practicable. Instruments are to be clearly readable in the ambient lighting.

5.1.2 The location is to be such as to allow easy access for maintenance operations.

Section 6 Testing

1 General

1.1 General

1.1.1 Automation systems are to be tested for type approval, at works and on board, when required. Tests are to be carried out under the supervision of a Surveyor of the Society.

1.1.2 The type testing conditions for electrical, control and instrumentation equipment, computers and peripherals are described in Article [2].

1.1.3 Automation systems are to be inspected at works, according to the requirements of Article [3], in order to check that the construction complies with the Rules.

1.1.4 Automation systems are to be tested when installed on board and prior to sea trials, to verify their performance and adaptation on site, according to Article [4].

2 Type approval

2.1 General

2.1.1 The following requirements are applicable, but not confined, to electrical and electronic equipment which are intended to be type approved for control, monitoring, alarm and protection systems for use in ships.

2.1.2 The necessary documents to be submitted, prior to type testing, are listed in Ch 3, Sec 1, [2.2.1] and Ch 3, Sec 3, [3.1.1]. The type approval of automation systems refers to hardware type approval or software type approval, as applicable.

2.2 Hardware type approval

2.2.1 Hardware type approval of automation systems is obtained subject to the successful outcome of the tests described in Tab 1. These tests are to demonstrate the ability of the equipment to function as intended under the specified test conditions.

2.2.2 The extent of testing (i.e. selection and sequence of carrying out tests and number of pieces to be tested) is to be determined upon examination and evaluation of the equipment or component subject to testing, giving due regards to its intended usage.

Equipment is to be tested in its normal position if otherwise not specified in the test specification.

Vibration and salt mist testing may be performed on different specimens, where applicable.

Reset of the automation system is accepted between each test, where necessary.

Note 1: As used in this Section, and in contrast to a complete performance test, a functional test is a simplified test sufficient to verify that the equipment under test (EUT) has not suffered any deterioration caused by the individual environmental tests.

2.2.3 The following additional tests may be required, depending on particular manufacturing or operational conditions:

- mechanical endurance test
- temperature shock test (e.g. 12 shocks on exhaust gas temperature sensors from 20°C ± 5°C to maximum temperature of the range)
- immersion test
- oil resistance test
- shock test.

The test procedure is to be defined with the Society in each case.

2.3 Software type approval

2.3.1 Software of computer based systems are to be approved in accordance with Ch 3, Sec 3.

2.4 Loading instruments

2.4.1 Loading instrument approval consists of:

- approval of hardware according to [2.2], unless two computers are available on board for loading calculations only
- approval of basic software according to [2.3]

- approval of application software, consisting in data verification which results in the Endorsed Test Condition according to Part B
- installation testing according to [4].

2.5 Oil mist detection system

2.5.1 Type test of oil mist detection system are to be carried out according to Ch 3, App 1.

Table 1 : Type tests

No.	Test	Procedure **(6)**	Test parameters	Other information
1	Visual inspection	–	–	• drawings, design data
2	Performance test	Manufacturer performance test programme based upon specification and relevant rule requirements When the EUT is required to comply with an international performance standard, e.g. protection relays, verification of requirements in the standard are to be part of the performance testing required in this initial test and subsequent performance tests after environmental testing where required as per [2.2].	• standard atmosphere conditions • temperature: 25°C ± 10°C • relative humidity: 60% ± 30% • air pressure: 96 KPa ± 10 KPa	• confirmation that operation is in accordance with the requirements specified for particular automatic systems or equipment • checking of self-monitoring features • checking of specified protection against an access to the memory • checking against effect of unerroneous use of control elements in the case of computer systems
3	Power supply failure	–	• 3 interruptions during 5 minutes • switching- off time 30 s each case	• verification of the specified action of the equipment on loss and restoration of supply in accordance with the system design • verification of possible corruption of programme or data held in programmable electronic systems, where applicable • the time of 5 minutes may be exceeded if the equipment under test needs a longer time for start up, e.g. booting sequence • for equipment which requires booting, one additional power supply interruption during booting to be performed
4a	Electric A.C. power supply variations	–	COMBINATION Voltage variation permanent / Frequency variation permanent + 6% / + 5% + 6% / – 5% – 10% / – 5% – 10% / + 5% Voltage transient (1,5s) / Frequency transient (5s) + 20% / + 10% – 20% / – 10%	• verification of the specified action of the equipment on loss and restoration of supply in accordance with the system design • verification of possible corruption of programme or data held in programmable electronic systems, where applicable • the time of 5 minutes may be exceeded if the equipment under test needs a longer time for start up, e.g. booting sequence • for equipment which requires booting, one additional power supply interruption during booting to be performed

No.	Test	Procedure **(6)**	Test parameters	Other information
4b	Electric D.C. power supply variations	–	Voltage tolerance continuous: ± 10% Voltage cyclic variation: 5% Voltage ripple: 10% Electric battery supply: • +30% to –25% for equipment connected to charging battery or as determined by the charging/discharging characteristics, including ripple voltage from the charging device • +20% to –25% for equipment not connected to the battery during charging	• verification of the specified action of the equipment on loss and restoration of supply in accordance with the system design • verification of possible corruption of programme or data held in programmable electronic systems, where applicable • the time of 5 minutes may be exceeded if the equipment under test needs a longer time for start up, e.g. booting sequence • for equipment which requires booting, one additional power supply interruption during booting to be performed
4c	Pneumatic and hydraulic power supply variations	–	Pressure: ± 20% Duration: 15 minutes	• verification of the specified action of the equipment on loss and restoration of supply in accordance with the system design • verification of possible corruption of programme or data held in programmable electronic systems, where applicable • the time of 5 minutes may be exceeded if the equipment under test needs a longer time for start up, e.g. booting sequence • for equipment which requires booting, one additional power supply interruption during booting to be performed
5	Dry heat **(1)**	IEC 60068-2-2:2007 Test "Bb" for non-heat dissipating equipment	• Temperature: 55°C ± 2°C Duration: 16 hours, or • Temperature: 70°C ± 2°C Duration: 16 hours	• equipment operating during conditioning and testing • functional test **(9)** during the last hour at the test temperature • for equipment specified for increased temperature the dry heat test is to be conducted at the agreed test temperature and duration.
		IEC 60068-2-2:2007 Test "Be" for heat dissipating equipment	• Temperature: 55°C ± 2°C Duration: 16 hours, or • Temperature: 70°C ± 2°C Duration: 16 hours	• equipment operating during conditioning and testing with cooling system on if provided • functional test **(9)** during the last hour at the test temperature • for equipment specified for increased temperature the dry heat test is to be conducted at the agreed test temperature and duration.

No.	Test	Procedure **(6)**	Test parameters	Other information
6	Damp heat	IEC 60068-2-30:2005 Test Db	Temperature: 55°C Humidity: 95% Duration: 2 cycles (12 + 12 hours)	• measurement of insulation resistance before test • the test shall start with 25°C ± 3°C and at least 95% humidity • equipment operating during the complete first cycle and switched off during second cycle except for functional test • functional test during the first 2 hours of the first cycle at the test temperature and during the last 2 hours of the second cycle at the test temperature; Duration of the second cycle can be extended due to more convenient handling of the functional test • recovery at standard atmosphere conditions • insulation resistance measurements and performance test
7	Vibration	IEC 60068-2-6:2007 Test Fc	• 2 Hz ± 3/0 Hz to 13,2 Hz amplitude: ± 1mm • 13,2 Hz to 100 Hz acceleration: ± 0,7 g For severe vibration conditions such as, e. g., on diesel engines, air compressors, etc.: • 2,0 Hz to 25 Hz amplitude: ± 1,6 mm • 25 Hz to 100 Hz acceleration: ± 4,0 g Note: More severe conditions may exist for example on exhaust manifolds or fuel oil injection systems of diesel engines. For equipment specified for increased vibration levels the vibration test is to be conducted at the agreed vibration level, frequency range and duration. Values may be required to be in these cases: • 40 Hz to 2000 Hz • acceleration: ± 10,0 g at 600°C	• duration 90 minutes at 30 Hz in case of no resonance condition • duration 90 minutes at each resonance frequency at which Q ≥ 2 is recorded • during the vibration test, functional tests are to be carried out • tests to be carried out in three mutually perpendicular planes • it is recommended as a guidance that Q does not exceed 5 • duration 120 minutes where sweep test is to be carried out instead of discrete frequency test and a number of resonant frequencies is detected close to each other. Sweep over a restricted frequency range between 0.8 and 1.2 times the critical frequencies can be used where appropriate. Note: Critical frequency is a frequency at which the equipment being tested may exhibit: • malfunction and/or performance deterioration • mechanical resonances and/or other response effects occur, e.g. chatter

No.	Test	Procedure **(6)**	Test parameters	Other information
8	Inclination	IEC 60092-504:2016	Static 22,5° Dynamic 22,5°	a) inclined to the vertical at an angle of at least 22,5° b) inclined to at least 22,5° on the other side of the vertical and in the same plane as in a) c) inclined to the vertical at an angle of at least 22,5° in plane at right angles to that used in a) d) inclined to at least 22,5° on the other side of the vertical and in the same plane as in c) Note: The period of testing in each position should be sufficient to fully evaluate the behaviour of the equipment Using the directions defined in a) to d) above, the equipment is to be rolled to an angle of 22,5° each side of the vertical with a period of 10 seconds The test in each direction is to be carried out for not less than 15 minutes Note: These inclination tests are normally not required for equipment with no moving parts.
9	Insulation resistance	Rated supply voltage / Test voltage (D.C. voltage) (V) Un ≤ 65 V / 2 x Un min. 24 V Un > 65V / 500 V	Minimum insulation resistance before / after 10 Mohms / 1,0 Mohms 100 Mohms / 10 Mohms	• insulation resistance test is to be carried out before and after: damp heat test, cold test, salt mist test and high-voltage test • between all phases and earth, and where appropriate between the phases Note: Certain components, e. g. for EMC protection, may be required to be disconnected for this test
10	High-voltage	Rated voltage Un Up to 65 V 66 V to 250 V 251 V to 500 V 501 V to 690 V	Test voltage (A.C. voltage 50 or 60Hz) 2 x Un + 500 V 1500 V 2000 V 2500 V	• separate circuits are to be tested against each other and all circuits connected with each other tested against earth • printed circuits with electronic components may be removed during the test • period of application of the test voltage: 1 minute Note: Certain components, e. g. printed circuits with electronic components, may be required to be disconnected for this test.
11	Cold	IEC 60068-2-1:2007	• Temperature: +5°C ± 3°C Duration: 2 hours, or • Temperature: –25°C ± 3°C Duration: 2 hours (see **(2)**)	• initial measurement of insulation resistance • equipment not operating during conditioning and testing except for functional test • functional test during the last hour at the test temperature • insulation resistance measurement and the functional test after recovery

No.	Test	Procedure **(6)**	Test parameters	Other information
12	Salt mist	IEC 60068-2-52:2017 Test Kb	Four spraying periods with a storage of seven days after each	• initial measurement of insulation resistance and initial functional test • equipment not operating during conditioning • functional test on the 7th day of each storage period • insulation resistance measurement and performance test 4 to 6h after recovery (see **(3)**) • on completion of exposure, the equipment shall be examined to verify that deterioration or corrosion (if any) is superficial in nature
13	Electrostatic discharge	IEC 61000-4-2:2008	Contact discharge: 6 kV Air discharge: 2 kV, 4 kV, 8 kV Interval between single discharges: 1 sec. No. of pulses: 10 per polarity According to test level 3	• to simulate electrostatic discharge as may occur when persons touch the appliance • the test is to be confined to the points and surfaces that can normally be reached by the operator • performance criterion B (see **(4)**)
14	Electromagnetic field	IEC 61000-4-3:2020 or IEC 61000-4-3:2006 + AMD1:2007 + AMD2:2010	Frequency range: 80 MHz to 6 GHz Modulation**: 80% AM at 1000Hz Field strength: 10V/m Frequency sweep rate: ≤ $1,5.10^{-3}$ decades/s (or 1% / 3 sec) According to test level 3	• to simulate electromagnetic fields radiated by different transmitters • the test is to be confined to the appliances exposed to direct radiation by transmitters at their place of installation • performance criterion A (see **(5)**) ** If, for tests of equipment, an input signal with a modulation frequency of 1000 Hz is necessary, a modulation frequency of 400 Hz should be chosen • If an equipment is intended to receive radio signals for the purpose of radio communication (e.g. wifi router, remote radio controller), then the immunity limits at its communication frequency do not apply, subject to the provisions in Ch 3, Sec 3, [6.2].
15	Conducted low Frequency		A.C.: • Frequency range: rated frequency to 200th harmonic • Test voltage (rms): 10% of supply to 15th harmonic reducing to 1% at 100th harmonic and maintain this level to the 200th harmonic, min 3 V r.m.s, max. 2 W D.C.: • Frequency range: 50 Hz - 10 kHz • Test voltage (rms): 10% of supply, max. 2 W	• to simulate distortions in the power supply system generated, for instance, by electronic consumers and coupled in as harmonics • performance criterion A (see **(5)**) • see figure “Test set-up” (see **(8)**) • for keeping max. 2W, the voltage of the test signal may be lower

No.	Test	Procedure **(6)**	Test parameters	Other information
16	Conducted Radio Frequency	IEC 61000-4-6:2013	AC, DC, I/O ports and signal/ control lines Frequency range: 150 kHz - 80 MHz Amplitude: 3 V rms (see **(7)**) Modulation***: 80% AM at 1000 Hz Frequency sweep range: ≤ $1,5.10^{-3}$ decades/s (or 1% / 3sec.) According to test level 2	• to simulate electromagnetic fields coupled as high frequency into the test specimen via the connecting lines • performance criterion A (see **(5)**) *** If, for tests of equipment, an input signal with a modulation frequency of 1000 Hz is necessary, a modulation frequency of 400 Hz should be chosen
17	Electrical Fast Transients / Burst	IEC 61000-4-4:2012	Single pulse time: 5ns (between 10% and 90% value) Single pulse width: 50 ns (50% value) Amplitude (peak): 2 kV line on power supply port/earth; 1 kV on I/O data control and communication ports (coupling clamp) Pulse period: 300 ms Burst duration: 15 ms Duration/polarity: 5 min According to test level 3	• arcs generated when actuating electrical contacts • interface effect occurring on the power supply, as well as at the external wiring of the test specimen • performance criterion B (see **(4)**)
18	Surge	IEC 61000-4-5:2017	Test applicable to AC and DC power ports. Open-circuit voltage: • Pulse rise time: 1,2 µs (front time) • Pulse width: 50 µs (time of half value) • Amplitude (peak): 1 kV line/earth; 0,5kV line/line Short circuit current: • Pulse rise time: 8 µs (front time) • Pulse width: 20 µs (time of half value) Repetition rate: ≥ 1 pulse/min No of pulses: 5 per polarity Application: continuous According to test level 2	• to simulate interference generated, for instance, by switching “ON” or “OFF” high power inductive consumers • test procedure in accordance with figure 10 of the standard for equipment where power and signal lines are identical • performance criterion B (see **(4)**)

No.	Test	Procedure **(6)**	Test parameters	Other information
19	Radiated Emission	CISPR 16-2-3:2016 IEC 60945:2002 for 156-165 MHz	Limits below 1000MHz: • For equipment installed in the bridge and deck zone: Frequency range: (MHz) — Quasi peak limits: (dBµV/m) 0,15 - 0,30 — 80- 52 0,30 - 30 — 52- 34 30 - 1000 — 54 except for: 156 - 165 — 24 • For equipment installed in the general power distribution zone: Frequency range: (MHz) — Quasi peak limits: (dBµV/m) 0,15 - 30 — 80 - 50 30 - 100 — 60 - 54 100 - 1000 — 54 except for: 156 - 165 — 24 Limits above 1000MHz: Frequency range: (MHz) — Average limit: (dBµV/m) 1000-6000 — 54	• procedure in accordance with the standard but distance 3 m between equipment and antenna • for the frequency band 156 MHz to 165 MHz the measurement is to be repeated with a receiver bandwidth of 9 kHz (as per IEC 60945:2002) • alternatively the radiation limit at a distance of 3 m from the enclosure port over the frequency 156 MHz to 165 MHz shall be 30 dB micro-V/m peak (as per IEC 60945:2002) • procedure in accordance with the standard (distance 3 m between equipment and antenna) Equipment intended to transmit radio signals for the purpose of radio communication (e.g. wifi router, remote radio controller) may be exempted from limit, within its communication frequency range, subject to the provisions in Ch 3, Sec 3, [6.2]
20	Conducted Emission	CISPR 16-2-1:2017	Test applicable to AC and DC power ports • For equipment installed in the bridge and deck zone: Frequency range: — Limits: (dBµV) 10 - 150 kHz — 96 - 50 150 - 350 kHz — 60 - 50 0,35 - 30 MHz — 50 • For equipment installed in the general power distribution zone: Frequency range: — Limits: (dBµV) 10 - 150 kHz — 120 - 69 150 - 500 kHz — 79 0,50 - 30 MHz — 73	

No.	Test	Procedure **(6)**	Test parameters	Other information
21	Flame retardant	IEC 60092-101:2018 or IEC 60695-11-5:2016	Flame application: 5 times 15 s each Interval between each application: 15 s or 1 time 30 s	• the burnt out or damaged part of the specimen by not more than 60mm long • no flame, no incandescence or in the event of a flame or incandescence being present, it shall extinguish itself within 30 s of the removal of the needle flame without full combustion of the test specimen • any dripping material shall extinguish itself in such a way as not to ignite a wrapping tissue. The drip height is 200 mm ± 5 mm

(1) Dry heat at 70 °C is to be carried out to automation, control and instrumentation equipment subject to high degree of heat, for example mounted in consoles, housings, etc. together with other heat dissipating power equipment.

(2) For equipment installed in non-weather protected locations or cold locations, test is to be carried out at –25°C.

(3) Salt mist test is to be carried out for equipment installed in weather exposed areas.

(4) Performance criterion B: (for transient phenomena): The Equipment Under Test shall continue to operate as intended after the tests. No degradation of performance or loss of function is allowed as defined in the technical specification published by the Manufacturer. During the test, degradation or loss of function or performance which is self recoverable is however allowed but no change of actual operating state or stored data is allowed.

(5) Performance criterion A (for continuous phenomena): The EUT shall continue to operate as intended during and after the test. No degradation of performance or loss of function is allowed as defined in relevant equipment standard and the technical specification published by the Manufacturer.

(6) Column 3 indicates the testing procedure which is normally to be applied. However, equivalent testing procedure may be accepted by the Society provided that what is required in the other columns is fulfilled. Later versions (including revisions) of the international standards specified in this table are acceptable for use, provided the Society determines them to be equivalent to the technical specifications.

(7) For equipment installed on the bridge and deck zone, the test levels shall be increased to 10V rms for spot frequencies in accordance with IEC 60945:2002 at 2,3,4,6.2, 8.2, 12.6, 16.5, 18.8, 22, 25 MHz.

(8) Figure - Test set-up for Conducted Low Frequency.

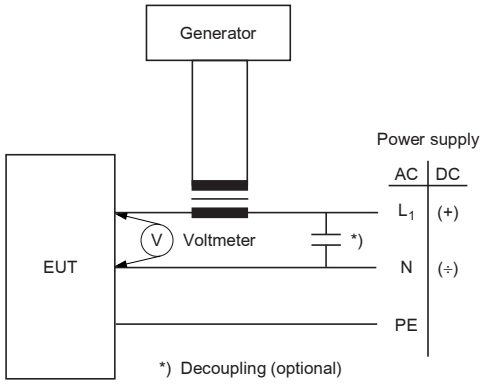

(9) See [2.2.2], Note 1.

3 Acceptance testing

3.1 General

3.1.1 Acceptance tests are generally to be carried out at the manufacturer's facilities before the shipment of the equipment, when requested.

Acceptance tests refer to hardware and software tests as applicable.

3.2 Hardware testing

3.2.1 Final acceptance will be granted subject to:

- the results of the tests listed in [3.2.2]
- the type test report or type approval certificate.

3.2.2 Hardware acceptance tests include, where applicable:

- visual inspection
- operational tests and, in particular:
  - tests of all alarm and safety functions
  - verification of the required performance (range, calibration, repeatability, etc.) for analogue sensors
  - verification of the required performance (range, set points, etc.) for on/off sensors
  - verification of the required performance (range, response time, etc.) for actuators
  - verification of the required performance (full scale, etc.) for indicating instruments
- endurance test (burn-in test or equivalent)
- high-voltage test
- hydrostatic tests.

Additional tests may be required by the Society.

3.3 Software testing

3.3.1 Software acceptance tests of computer based systems are to be carried out according to Ch 3, Sec 3.

4 Onboard tests

4.1 General

4.1.1 The onboard tests are to be performed as per Ch 3, Sec 3, [4.3.6] and Ch 3, Sec 3, [4.3.7].

4.1.2 On board tests are to be carried out on automation systems associated with essential services to verify their compliance with the Rules, by means of visual inspection and the performance and functionality according to Tab 2.

On board testing is to verify that correct functionality has been achieved with all systems integrated.

When completed, automation systems are to be such that a single failure, for example loss of power supply, is not to result in a major degradation of the propulsion or steering of the ship. In addition, a blackout test is to be carried out to show that automation systems are continuously supplied.

Upon completion of on board tests, test reports are to be made available to the Surveyor.

4.1.3 For wireless data communication equipment, tests during harbour and sea trials are to be conducted to demonstrate that radio-frequency transmission does not cause failure of any equipment and does not itself fail as a result of electromagnetic interference during expected operating conditions.

Note 1: Where electromagnetic interference caused by wireless data communication equipment is found to be causing failure of equipment required for Category II or III systems, the layout and/or equipment are/is to be changed to prevent further failures occurring.

Table 2 : On board tests

Equipment	Nature of tests
Electronic equipment	Main hardware and software functionalities with all systems integrated
Analogue sensors	Signal calibration, trip set point adjustment
On/off sensors	Simulation of parameter to verify and record the set points
Actuators	Checking of operation in whole range and performance (response time, pumping)
Reading instruments	Checking of calibration, full scale and standard reference value

Appendix 1 Type Testing Procedure for Crankcase Oil Mist Detection and Alarm Equipment

1 General

1.1 Scope

1.1.1 This Appendix is to specify the tests required to demonstrate that crankcase oil mist detection and alarm equipment intended to be fitted to diesel engines.

Note 1: This test procedure is also applicable to oil mist detection and alarm equipment intended for gear cases.

1.2 Reference

1.2.1 See Ch 3, Sec 6, [2] for test specification for type approval.

1.3 Purpose

1.3.1 The purpose of type testing crankcase oil mist detection and alarm equipment is to verify:

- the functionality of the system
- the effectiveness of the oil mist detectors
- the accuracy of oil mist detectors
- the alarm set points
- time delays between oil mist leaving the source and alarm activation
- functional failure detection
- the influence of optical obscuration on detection.

1.4 Test facilities

1.4.1 Test houses carrying out type testing of crankcase oil mist detection and alarm equipment are to satisfy the following criteria:

- A full range of facilities for carrying out the environmental and functionality tests required by this procedure shall be available and be acceptable to the Society
- The test house that verifies the functionality of the equipment is to be equipped so that it can control, measure and record oil mist concentration levels in terms of mg/l to an accuracy of ± 10% in accordance with this procedure.
- When verifying the functionality, test houses are to consider the possible hazards associated with the generation of the oil mist required and take adequate precautions. The Society will accept the use of low toxicity, low hazard oils as used in other applications, provided it is demonstrated to have similar properties to SAE 40 monograde mineral oil specified.

2 Testing

2.1 Equipment testing

2.1.1 The range of tests for the alarm/monitoring panel is to include the following:

a) functional tests described in [2.2]

b) electrical power supply failure test

c) power supply variation test

d) dry heat test

e) damp heat test

f) vibration test

g) EMC test

h) insulation resistance test

i) high-voltage test

j) static and dynamic inclinations, if moving parts are contained.

2.1.2 The range of tests for the detectors is to include the following:

a) functional tests described in [2.2]

b) electrical power supply failure test

c) power supply variation test

d) dry heat test

e) damp heat test

f) vibration test

g) EMC test where susceptible

h) insulation resistance test

i) high-voltage test

j) static and dynamic inclinations.

2.2 Functional tests

2.2.1 All tests to verify the functionality of crankcase oil mist detection and alarm equipment are to be carried out in accordance with [2.2.2] to [2.2.7] with an oil mist concentration in air, known in terms of mg/l to an accuracy of ± 10%.

2.2.2 The concentration of oil mist in the test chamber is to be measured in the top and bottom of the chamber and these concentrations are not to differ by more than 10%. See also [2.4.1], item a).

2.2.3 The oil mist detector monitoring arrangements are to be capable of detecting oil mist in air concentrations of between 0 and 10% of the lower explosive limit (LEL) or between 0 and a percentage of weight of oil in air determined by the Manufacturer based on the sensor measurement method (e.g. obscuration or light scattering) that is acceptable to the Society taking into account the alarm level specified in [2.2.4].

Note 1: The LEL corresponds to an oil mist concentration of approximately 50 mg/l (~4,1% weight of oil in air mixture).

2.2.4 The alarm set point for oil mist concentration in air is to provide an alarm at a maximum level corresponding to not more than 5% of the LEL or approximately 2,5 mg/l.

2.2.5 Where alarm set points can be altered, the means of adjustment and indication of set points are to be verified against the equipment manufacturer's instructions.

2.2.6 The performance of the oil mist detector in mg/l is to be demonstrated. This is to include the following:

- range (oil mist detector)
- resolution (oil mist detector)
- sensitivity (oil mist detector)

Note 1: Sensitivity of a measuring system: quotient of the change in an indication of a measuring system and the corresponding change in a value of a quantity being measured.

Note 2: Resolution: smallest change in a quantity being measured that causes a perceptible change in the corresponding indication.

2.2.7 Where oil mist is drawn into a detector via piping arrangements, the time delay between the sample leaving the crankcase and operation of the alarm is to be determined for the longest and shortest lengths of pipes recommended by the manufacturer. The pipe arrangements are to be in accordance with the manufacturer's instructions/recommendations. Piping is to be arranged to prevent pooling of oil condensate which may cause a blockage of the sampling pipe over time.

2.2.8 It is to be demonstrated that the openings of detector equipment does not become occluded or blocked under continuous splash and spray of engine lubricating oil, as may occur in the crankcase atmosphere. Testing is to be in accordance with arrangements proposed by the manufacturer and agreed by the classification society. The temperature, quantity and angle of impact of the oil to be used is to be declared and their selection justified by the manufacturer.

2.2.9 Detector equipment may be exposed to water vapour from the crankcase atmosphere which may affect the sensitivity of the equipment and it is to be demonstrated that exposure to such conditions will not affect the functional operation of the detector equipment. Where exposure to water vapour and/or water condensation has been identified as a possible source of equipment malfunctioning, testing is to demonstrate that any mitigating arrangements such as heating are effective. Testing is to be in accordance with arrangements proposed by the manufacturer and agreed by the Society.

Note 1: This testing is in addition to that required by [2.1.2], item e) and is concerned with the effects of condensation caused by the detection equipment being at a lower temperature than the crankcase atmosphere.

2.2.10 It is to be demonstrated that an indication is given where lenses fitted in the equipment and used in determination of the oil mist level have been partially obscured to a degree that will affect the reliability of the information and alarm indication as required by Ch 1, Sec 2, [2.3.5].

2.3 Detectors and alarm equipment to be tested

2.3.1 The detectors and alarm equipment selected for the type testing are to be selected from the manufacturer's normal production line by the Surveyor witnessing the tests.

2.3.2 Two detectors are to be tested. One is to be tested in clean condition and the other in a condition representing the maximum level of lens obscuration specified by the manufacturer.

2.4 Method

2.4.1 The following requirements for oil mist generation are to be satisfied at type testing:

a) The ambient temperature in and around the test chamber is to be at the standard atmospheric conditions defined in Ch 3, Sec 6, [2] before any test run is started.

b) Oil mist is to be generated with suitable equipment using an SAE 40 monograde mineral oil or equivalent and supplied to a test chamber. The selection of the oil to be used is to take into consideration risks to health and safety, and the appropriate controls implemented. A low toxicity, low flammability oil of similar viscosity may be used as an alternative. The oil mist produced is to have an average (or arithmetic mean) droplet size not exceeding 5 µm. The oil droplet size is to be checked using the sedimentation method or an equivalent method to a relevant international or national standard. If the sedimentation method is chosen, the test chamber is to have a minimum height of 1m and a volume of not less than $1m^3$.

Note 1: The calculated oil droplet size using the sedimentation method represents the average droplet size.

c) The oil mist concentrations used are to be ascertained by the gravimetric deterministic method or equivalent. Where an alternative technique is used its equivalence is to be demonstrated.

Note 2: For this test, the gravimetric deterministic method is a process where the difference in weight of a 0,8 µm pore size membrane filter is ascertained from weighing the filter before and after drawing 1 litre of oil mist through the filter from the oil mist test chamber. The oil mist chamber is to be fitted with a recirculating fan.

d) Samples of oil mist are to be taken at regular intervals and the results plotted against the oil mist detector output. The oil mist detector is to be located adjacent to where the oil mist samples are drawn off.

e) The results of a gravimetric analysis are considered invalid and are to be rejected if the resultant calibration curve has an increasing gradient with respect to the oil mist detection reading. This situation occurs when insufficient time has been allowed for the oil mist to become homogeneous. Single results that are more than 10% below the calibration curve are to be rejected. This situation occurs when the integrity of the filter unit has been compromised and not all of the oil is collected on the filter paper.

f) The filters require to be weighed to a precision of 0,1mg and the volume of air/oil mist sampled to 10 ml.

2.4.2 For type testing approval by the Society the testing is to be witnessed by authorised personnel from the Society.

2.4.3 Oil mist detection equipment is to be tested in the orientation (vertical, horizontal or inclined) in which it is intended to be installed on an engine or gear case as specified by the equipment manufacturer.

2.4.4 Type testing is to be carried out for each type of oil mist detection and alarm equipment for which a manufacturer seeks approval. Where sensitivity levels can be adjusted, testing is to be carried out at the extreme and mid-point level settings.

2.5 Assessment

2.5.1 Assessment of oil mist detection equipment after testing is to address the following:

- The equipment to be tested is to have evidence of design appraisal/approval.
- Details of the detection equipment to be tested are to be recorded such as name of manufacturer, type designation, oil mist concentration assessment capability and alarm settings, the maximum percentage level of lens obscuration used in [2.3.2].
- After completing the tests, the detection equipment is to be examined and the condition of all components ascertained and documented. Photographic records of the monitoring equipment condition are to be taken and included in the report.

2.6 Design series qualification

2.6.1 The approval of one type of detection equipment may be used to qualify other devices having identical construction details. Proposals are to be submitted for consideration.

2.7 Test report

2.7.1 The test house is to provide a full report which includes the following information and documents:

- test specification
- details of equipment tested

- results of tests are to include a declaration by the manufacturer of the oil mist detector of its:
  - performance, in mg/L
  - accuracy, of oil mist concentration in air
  - precision, of oil mist concentration in air
  - range, of oil mist detector
  - resolution, of oil mist detector
  - response time, of oil mist detector
  - sensitivity, of oil mist detector
  - obscuration of sensor detection, declared as percentage of obscuration. 0% totally clean, 100% totally obscure
  - detector failure alarm.

2.8 Acceptance

2.8.1 Acceptance of crankcase oil mist detection equipment is at the discretion of the Society based on the appraisal plans and particulars and the test house report of the results of type testing.

2.8.2 The following information is to be submitted to the Society for acceptance of oil mist detection equipment and alarm arrangements:

- Description of oil mist detection equipment and system including alarms
- Copy of the test house report identified in [2.7]
- Schematic layout of engine oil mist detection arrangements showing location of detectors/sensors and piping arrangements and dimensions
- Maintenance and test manual which is to include the following information:
  - intended use of equipment and its operation
  - functionality tests to demonstrate that the equipment is operational and that any faults can be identified and corrective actions notified
  - maintenance routines and spare parts recommendations
  - limit setting and instructions for safe limit levels
  - where necessary, details of configurations in which the equipment is and is not to be used.

CHAPTER 4
FIRE PROTECTION, DETECTION AND EXTINCTION

Section 1 General
Section 2 Prevention of Fire
Section 3 Suppression of Fire: Detection and Alarm
Section 4 Suppression of Fire: Control of Smoke Spread
Section 5 Suppression of Fire: Containment of Fire
Section 6 Suppression of Fire: Fire Fighting
Section 7 Suppression of Fire: Structural Integrity
Section 8 Escape
Section 9 Fire Control Plans
Section 10 Helicopter Facilities
Section 11 Fuel for Auxiliary Vehicles
Section 12 Carriage of Dangerous Goods
Section 13 Protection of Vehicle, Special Category and Ro-ro Spaces
Section 14 Safety Centre on Passenger Ships
Section 15 Fire Safety Systems

Section 1 General

1 Application

1.1 General

1.1.1 This Chapter applies to passenger ships and cargo ships (including tankers) of 500 gross tonnage and upwards, engaged in international voyages. Ships other than those specified above are to comply with the specific Rules of the Society.

Note 1: This Chapter includes requirements of:

- Chapter II-2 of SOLAS 1974 as amended
- International Code of Fire Safety System (FSS Code), as adopted by IMO Maritime Safety Committee by Resolution MSC.98(73), as amended by the following IMO Resolutions: MSC.206(81), MSC.217(82), MSC.292(87), MSC.311(88), MSC.327(90), MSC.339(91), MSC.367(93), MSC.403(96), MSC.410(97), MSC.457(101), MSC.484(103)

1.1.2 Alternative design and arrangements

The Society may consider the acceptance of alternatives to the requirements set out in the present Chapter. If deemed necessary, the Society may require engineering analysis, evaluation and approval of the alternative design and arrangement to be carried out in accordance with IMO Circular MSC/Circ.1002, as amended.

1.2 National regulations

1.2.1 When the Administration of the State whose flag the ship is entitled to fly has issued specific rules covering fire protection, the Society may accept such rules for classification purposes in lieu of those given in this Chapter.

In such cases a special notation regarding the above is entered on the Certificate of Class of the ship concerned.

This may apply to cargo ships of less than 500 gross tonnage or to ships not engaged in international voyages.

1.3 Applicable requirements depending on ship type

1.3.1 Unless expressly provided otherwise:

a) requirements not referring to a specific ship type are applied to ships of all types

b) requirements referring to “passenger ships” are applied to passenger ships as defined in [2.37]

c) requirements referring to “cargo ships” are applied to cargo ships as defined in [2.9] and tankers as defined in [2.50].

1.3.2 Ships assigned the additional service feature **SPxxx**, **SPxxx-capable**, **IPxxx** or **IPxxx-capable** are to comply with the requirements of this chapter, considering the ship:

- as a cargo ship, when xxx is not more than 60
- as a passenger ship carrying not more than 36 passengers, when xxx is not more than 240 but greater than 60
- as a passenger ship carrying more than 36 passengers, when xxx is greater than 240.

1.4 Documentation to be submitted

1.4.1 The interested party is to submit to the Society the documents listed in Tab 1.

Table 1 : Documentation to be submitted

No	I/A **(1)**	Document **(2)**
1	A	Structural fire protection, showing the method of construction, purpose and category of the various spaces of the ships, the fire rating of bulkheads and decks, means of closings of openings in A and B class divisions, draught stops
2	A	Natural and mechanical ventilation systems showing the penetrations on A class divisions, location of dampers, means of closing, arrangements of air conditioning rooms
3	A	Means of escape and, where required, the relevant dimensioning. Escape route signage
4	A	Automatic fire detection systems and manually operated call points
5	A	Fire pumps and fire main including pumps head and capacity, hydrant and hose locations
6	A	Arrangement of fixed fire-extinguishing systems **(2)**
7	A	Arrangement of sprinkler or sprinkler equivalent systems including the capacity and head of the pumps **(2)**
8	A	Fire control plan
9	A	Fixed fire-extinguishing system in scavenge spaces of two-stroke crosshead type engines (see Ch 1, Sec 2, [2.4.1])

No	I/A (1)	Document (2)
10	A	Electrical diagram of the fixed gas fire-extinguishing systems
11	A	Electrical diagram of the sprinkler systems
12	A	Electrical diagram of power control and position indication circuits for fire doors
13	I	General arrangement plan
14	A	When fuel for auxiliary vehicles is intended to be carried onboard (3): • Arrangement of the fuel storage and distribution system • Plan of hazardous areas • Diagram of the fuel storage and distribution system • Drawings showing the scantlings, material and arrangement of the fuel storage tank

(1) A : to be submitted for approval ; I : to be submitted for information

(2) Plans are to be schematic and functional and to contain all information necessary for their correct understanding and verification such as:
- service pressures
- capacity and head of pumps and compressors, if any
- materials and dimensions of piping and associated fittings
- volumes of protected spaces, for gas and foam fire-extinguishing systems
- surface areas of protected zones for automatic sprinkler and pressure water-spraying, low expansion foam and powder fire-extinguishing systems
- capacity, in volume and/or in mass, of vessels or bottles containing the extinguishing media or propelling gases, for gas, automatic sprinkler, foam and powder fire-extinguishing systems
- type, number and location of nozzles of extinguishing media for gas, automatic sprinkler, pressure water-spraying, foam and powder fire-extinguishing systems.

All or part of the information may be provided, instead of on the above plans, in suitable operation manuals or in specifications of the systems.

(3) In the case of a retrofit, the drawings of the systems serving spaces related to fuel for auxiliary vehicles will also have to be submitted. Especially, attention is drawn on the following drawings:
- Diagrams of the bilge, scupper, discharge and drainage systems serving spaces related to the fuel for auxiliary vehicles
- Diagram of drip trays and gutterway draining system serving spaces related to the fuel for auxiliary vehicles
- Natural and mechanical ventilation systems
- Automatic fire detection systems and manually operated call points
- Arrangement of fixed fire-extinguishing systems
- Fire control plan
- Structural fire protection

1.5 Type approved products

1.5.1 The following materials, equipment, systems or products in general used for fire protection are to be type approved by the Society, except for special cases for which the acceptance may be given for individual ships on the basis of suitable documentation or ad hoc tests:

a) A, B class fire divisions (bulkheads or decks) and associated openings

b) C-class divisions

c) Bulkhead or deck penetrations for pipes or ducts passing through A or B class divisions (where they are not of steel or other equivalent material)

d) Bulkhead or deck penetrations for electrical cables passing through A or B class divisions

e) Fire dampers

f) Prefabricated sanitary units

g) Prefabricated window casings

h) Fire door control systems

i) Flexible pipes and expansion bellows of non-conventional material for any type of fluid

j) Materials with low flame spread characteristic including paints, varnishes and similar, when they are required to have such characteristic

k) Non-combustible materials

l) Non-readily igniting materials for primary deck coverings

m) Fixed foam fire-extinguishing systems and associated foam-forming liquids

n) Fixed powder fire-extinguishing systems, including the powder

o) Equivalent water-mist fire-extinguishing systems

p) Equivalent fixed gas fire-extinguishing systems

q) Fixed water-based local application fire-extinguishing systems

r) Equivalent water-mist automatic sprinkler systems

s) Fixed fire-extinguishing systems for protection of galley cooking equipment

t) Portable fire-fighting device for stacked containers (according to Pt F, Ch 13, Sec 2, [5.1])

u) Portable fire-extinguishers

v) Non-portable and transportable extinguishers

w) Fire hoses

x) Portable foam applicators

y) Water and foam monitor

z) Foam proportioner/inductor

aa) Sprinkler heads for automatic sprinkler systems

ab) Nozzles for fixed pressure water-spraying fire-extinguishing systems for machinery spaces, boiler rooms, deep fat cooking equipment fire-extinguishing systems, and spaces intended for the carriage of vehicles and for hangars

ac) Sensing heads for automatic fire alarm and fire detection systems

ad) Fixed fire detection and fire alarm systems

ae) Flammable gas detection system

af) Explosive mixture detecting systems

ag) Portable explosive mixture detecting apparatus

ah) Fixed instruments for measuring the oxygen content for inert gas systems serving cargo tanks

ai) Portable instruments for measuring the oxygen content for inert gas systems serving cargo tanks

aj) Upholstered furniture, excluding the frame (for spaces defined in [2.39])

ak) Textile and non-textile materials suspended vertically, for example curtains (for spaces defined in [2.39])

al) Bedding components (for spaces defined in [2.39])

am) Low location lighting systems

an) Inert gas systems serving cargo tank.

ao) Fibre Reinforced Plastic (FRP) gratings used for safe access to bow (according to Pt D, Ch 7, Sec 2, [2.2.6], Pt D, Ch 8, Sec 3, [2.4] and Pt D, Ch 9, Sec 3, [1.2.14].

As regards the granting of type approval, the requirements of NR320 apply.

The Society may request type approval for other materials, equipment, systems or products required by the applicable provisions for ships or installations of special types.

2 Definitions

2.1 A class divisions

2.1.1 *"A" class divisions are those divisions formed by bulkheads and decks which comply with the following criteria:*

a) they are constructed of steel or other equivalent material

b) they are suitably stiffened

c) they are insulated with approved non-combustible materials such that the average temperature of the unexposed side will not rise more than 140°C above the original temperature, nor will the temperature, at any one point, including any joint, rise more than 180°C above the original temperature, within the time listed below:

- *class "A-60" : 60 minutes*
- *class "A-30" : 30 minutes*
- *class "A-15" : 15 minutes*
- *class "A-0" : 0 minutes*

d) they are so constructed as to be capable of preventing the passage of smoke and flame to the end of the one-hour standard fire test; and

e) the Society required a test of a prototype bulkhead or deck in accordance with the Fire Test Procedures Code (see [2.22]) *to ensure that it meets the above requirements for integrity and temperature rise.*

2.1.2 The products indicated in Tab 2 may be installed without testing or approval.

Table 2 : Products installed without testing or approval

Classification	Product description
Class A-0 bulkhead	A steel bulkhead with dimensions not less than the minimum dimensions given below: • thickness of plating: 4 mm • stiffeners 60 x 60 x 5 mm spaced at 600 mm or structural equivalent
Class A-0 deck	A steel deck with dimensions not less than the minimum dimensions given below: • thickness of plating: 4 mm • stiffeners 95 x 65 x 7 mm spaced at 600 mm or structural equivalent

2.2 Accommodation spaces

2.2.1 *Accommodation spaces are those spaces used for public spaces, corridors,* stairs, *lavatories, cabins, offices, hospitals, cinemas, games and hobbies rooms, barber shops, pantries containing no cooking appliances and similar spaces.*

2.2.2 Pantries or isolated pantries containing no cooking appliances may contain:

- toasters, microwave ovens, induction heaters and similar appliances each of them with a maximum power of 5 kW; and
- electrically heated cooking plates and hot plates for keeping food warm each of them with a maximum power of 2 kW and a surface temperature not above 150°C.

These pantries may also contain coffee machines, dish washers and water boilers with no exposed hot surfaces regardless of their power. A dining room containing such appliances should not be regarded as a pantry.

2.3 Atriums

2.3.1 Atriums are public spaces within a single main vertical zone spanning three or more open decks.

2.4 B class divisions

2.4.1 *"B" class divisions are those divisions formed by bulkheads, decks, ceilings or linings which comply with the following criteria:*

a) they are constructed of approved non-combustible materials and all materials used in the construction and erection of "B" class divisions are non-combustible, with the exception that combustible veneers may be permitted provided they meet other appropriate requirements of this Chapter

b) they have an insulation value such that the average temperature of the unexposed side will not rise more than 140°C above the original temperature, nor will the temperature at any one point, including any joint, rise more than 225°C above the original temperature, within the time listed below:

- *class "B-15" : 15 minutes*
- *class "B-0" : 0 minutes*

c) they are so constructed as to be capable of preventing the passage of flame to the end of the first half hour of the standard fire test; and

d) the Society required a test of a prototype division in accordance with the Fire Test Procedures Code (see [2.22]) *to ensure that it meets the above requirements for integrity and temperature rise.*

2.4.2 In order to be defined as B class, a metal division is to have plating thickness not less than 2 mm when constructed of steel.

2.5 Bulkhead decks

2.5.1 *The bulkhead deck is the uppermost deck up to which the transverse watertight bulkheads are carried.*

2.6 C class divisions

2.6.1 *"C" class divisions are divisions constructed of approved non-combustible materials. They need meet neither requirements relative to the passage of smoke and flame nor limitations relative to the temperature rise. Combustible veneers are permitted provided they meet the requirements of this Chapter.*

2.7 Cabin balconies

2.7.1 *Cabin balcony is an open deck which is provided for the exclusive use of the occupants of a single cabin and has direct access from such a cabin.*

2.8 Calorific value

2.8.1 The gross calorific value is determined in accordance with test standard ISO 1716:2018.

2.8.2 Materials meeting the provisions of paragraphs 2.3 of Annex 2 of Fire Test Procedures Code are considered as satisfying the requirement of maximum gross calorific value (45 MJ/m2) without further testing.

2.9 Cargo ship

2.9.1 *Cargo ship is any ship which is not a passenger ship.*

2.10 Cargo spaces

2.10.1 *Cargo spaces are spaces used for cargo, cargo oil tanks, tanks for other liquid cargo and trunks to such spaces.*

2.11 Central control station

2.11.1 *The central control station is a control station in which the following control and indicator functions are centralized:*

a) fixed fire detection and fire alarm systems

b) automatic sprinkler, fire detection and fire alarm systems

c) fire door indicator panels

d) fire door closures

e) watertight door indicator panels

f) watertight door closures

g) ventilation fans

h) general/fire alarms

i) communication systems including telephones; and

Note 1: The communication systems referred to are only those required by this Chapter.

j) microphones to public address systems.

2.12 Chemical tankers

2.12.1 *A chemical tanker is a cargo ship constructed or adapted and used for the carriage in bulk of any liquid product of a flammable nature listed in Pt D, Ch 8, Sec 17.*

2.13 Closed ro-ro spaces

2.13.1 *Closed ro-ro spaces are ro-ro spaces which are neither open ro-ro spaces nor weather decks.*

2.14 Closed vehicle spaces

2.14.1 *Closed vehicle spaces are vehicle spaces which are neither open vehicle spaces nor weather decks.*

2.15 Combination carriers

2.15.1 *A combination carrier is a cargo ship designed to carry both oil and solid cargoes in bulk.*

2.16 Continuous B class ceilings or linings

2.16.1 *Continuous "B" class ceilings or linings are those "B" class ceilings or linings which terminate at an "A" or "B" class division.*

2.17 Continuously manned central control stations

2.17.1 *A continuously manned central control station is a central control station which is continuously manned by a responsible member of the crew.*

2.18 Control stations

2.18.1 *Control stations are those spaces in which the ship's radio or main navigating equipment or the emergency source of power is located or where the fire recording or fire control equipment is centralized.*

Any other spaces containing a centralized server used for the navigation and safety systems of the vessel (e.g. a data centre) are to be considered as control stations.

2.19 Dangerous goods

2.19.1 Dangerous goods are those goods belonging to the following classes:

- class 1 - Explosives
- class 2 - Gases: compressed, liquefied or dissolved under pressure
- class 3 - Flammable liquids
- class 4.1 - Flammable solids
- class 4.2 - Substances liable to spontaneous combustion
- class 4.3 - Substances which, in contact with water, emit flammable gases
- class 5.1 - Oxidising substances
- class 5.2 - Organic peroxides
- class 6.1 - Poisonous (toxic) substances
- class 6.2 - Infectious substances
- class 7 - Radioactive materials
- class 8 - Corrosives
- class 9 - Miscellaneous dangerous substances (that is any other substance which experience has shown, or may show, to be of such a dangerous character that the provisions of Part A, Chapter VII of SOLAS Convention are to be applied).

2.20 Deadweight

2.20.1 *The deadweight is the difference in tonnes between the displacement of a ship in water of a specific gravity of 1,025 at the load waterline corresponding to the assigned summer freeboard and the lightweight of the ship.*

2.21 Fire damper

2.21.1 *Fire damper is a device installed in a ventilation duct, which under normal conditions remains open allowing flow in the duct, and is closed during a fire, preventing the flow in the duct to restrict the passage of fire. In using the above definition the following terms may be associated:*

a) automatic fire damper is a fire damper that closes independently in response to exposure to fire products

b) manual fire damper is a fire damper that is intended to be opened or closed by the crew by hand at the damper itself; and

c) remotely operated fire damper is a fire damper that is closed by the crew through a control located at a distance away from the controlled damper.

2.22 Fire Test Procedures Code

2.22.1 *Fire Test Procedures Code means the "International Code for Application of Fire Test Procedures, 2010" (2010 FTP Code), as adopted by the Maritime Safety Committee of the IMO by Resolution MSC.307 (88), as may be amended by the IMO.*

2.23 Gas carriers

2.23.1 *A gas carrier is a cargo ship constructed or adapted and used for the carriage in bulk of any liquefied gas or other products of a flammable nature listed in Pt D, Ch 9, Sec 19.*

2.24 Helicopter facility

2.24.1 *Helicopter facility is a helideck including any refuelling and hangar facilities.*

2.25 Helicopter landing area

2.25.1 *Helicopter landing area is an area on a ship designated for occasional or emergency landing of helicopters but not designed for routine helicopter operations.*

2.26 Helideck

2.26.1 *Helideck is a purpose-built helicopter landing area located on a ship including all structure, fire-fighting appliances and other equipment necessary for the safe operation of helicopters.*

2.27 Lightweight

2.27.1 *The lightweight is the displacement of a ship, in tonnes, without cargo, fuel, lubricating oil, ballast water, fresh water and feed water in tanks, consumable stores and passengers and crew and their effects,* but including liquids in piping and mediums required for the fixed fire-fighting systems (e.g. fresh water, CO_2, dry chemical powder, foam concentrate, etc.).

2.28 Low flame-spread

2.28.1 *A low flame-spread means that the surface thus described will adequately restrict the spread of flame, this being determined in accordance with the Fire Test Procedures Code.*

2.28.2 Non-combustible materials are considered as low flame spread. However, due consideration will be given by the Society to the method of application and fixing.

2.29 Machinery spaces

2.29.1 *Machinery spaces are machinery spaces of category A and other spaces containing propulsion machinery, boilers, oil fuel units, steam and internal combustion engines, generators and major electrical machinery, oil filling stations, refrigerating, stabilizing, ventilation and air conditioning machinery, and similar spaces, and trunks to such spaces.*

2.30 Machinery spaces of category A

2.30.1 *Machinery spaces of category A are those spaces and trunks to such spaces which contain either:*

a) internal combustion machinery used for main propulsion

b) internal combustion machinery used for purposes other than main propulsion where such machinery has in the aggregate a total power output of not less than 375 kW; or

c) any oil-fired boiler or oil fuel unit, or any oil-fired equipment other than boilers, such as inert gas generators, incinerators, etc.

2.31 Main vertical zones

2.31.1 *Main vertical zones are those sections into which the hull, superstructure and deckhouses are divided by "A" class divisions, the mean length and width of which on any deck does not in general exceed 40 m.*

2.32 Non-combustible material

2.32.1 *Non-combustible material is a material which neither burns nor gives off flammable vapours in sufficient quantity for self-ignition when heated to approximately 750°C, this being determined in accordance with the Fire Test Procedures Code. Any other material is a combustible material.*

2.32.2 In general, products made only of glass, concrete, ceramic products, natural stone, masonry units, common metals and metal alloys are considered as being non-combustible and may be installed without testing and approval.

2.33 Non-sparking fan

2.33.1 A fan is considered as non-sparking if in either normal or abnormal conditions it is unlikely to produce sparks. For this purpose, the following criteria are to be met:

a) Design criteria

1) The air gap between the impeller and the casing is to be not less than 1/10 of the shaft diameter in way of the impeller bearing and in any case not less than 2 mm, but need not exceed 13 mm.

2) Protective screens with square mesh of not more than 13 mm are to be fitted to the inlet and outlet of ventilation ducts to prevent objects entering the fan housing.

b) Materials

1) The impeller and the housing in way of the impeller are to be made of spark-proof materials which are recognised as such by means of an appropriate test to the satisfaction of the Society.

2) Electrostatic charges, both in the rotating body and the casing, are to be prevented by the use of antistatic materials. Furthermore, the installation on board of ventilation units is to be such as to ensure their safe bonding to the hull.

3) Tests may not be required for fans having the following material combinations:

- impellers and/or housings of non-metallic material, due regard being paid to the elimination of static electricity
- impellers and housings of non-ferrous materials
- impellers of aluminium alloys or magnesium alloys and a ferrous (including austenitic stainless steel) housing on which a ring of suitable thickness of non-ferrous material is fitted in way of the impeller
- any combination of ferrous (including austenitic stainless steel) impellers and housings with not less than 13 mm design tip clearance.

4) The following impeller and housing combinations are considered as sparking and therefore are not permitted:
   - impellers of an aluminium alloy or a magnesium alloy and a ferrous housing, regardless of tip clearance
   - housings made of an aluminium alloy or a magnesium alloy and a ferrous impeller, regardless of tip clearance
   - any combination of ferrous impeller and housing with less than 13 mm design tip clearance.
5) Complete fans are to be type-tested in accordance with either the Society's requirements or national or international standards accepted by the Society.

2.34 Oil fuel unit

2.34.1 *The oil fuel unit is the equipment used for the preparation of oil fuel for delivery to an oil-fired boiler, or equipment used for the preparation for delivery of heated oil to an internal combustion engine, and includes any oil pressure pumps, filters and heaters dealing with oil at a pressure of more than 0,18 MPa.*

2.34.2 Oil fuel unit includes any equipment used for the preparation and delivery of oil fuel, heated or not, to boilers (including inert gas generators) and engines (including gas turbines) at a pressure of more than 0,18 N/mm^2. Oil fuel transfer pumps are not considered as oil fuel units.

2.35 Open ro-ro spaces

2.35.1 *Open ro-ro spaces are those ro-ro spaces which are either open at both ends or have an opening at one end, and are provided with adequate natural ventilation effective over their entire length through permanent openings distributed in the side plating or deckhead or from above, having a total area of at least 10% of the total area of the space sides.*

2.36 Open vehicle spaces

2.36.1 *Open vehicle spaces are those vehicle spaces which are either open at both ends or have an opening at one end and are provided with adequate natural ventilation effective over their entire length through permanent openings distributed in the side plating or deckhead or from above, having a total area of at least 10% of the total area of the space sides.*

2.37 Passenger ship

2.37.1 *Passenger ship is a ship which carries more than twelve passengers*

2.38 Public spaces

2.38.1 *Public spaces are those portions of the accommodation which are used for halls, dining rooms, lounges and similar permanently enclosed spaces.*

2.39 Rooms containing furniture and furnishings of restricted fire risk

2.39.1 *Rooms containing furniture and furnishings of restricted fire risk, for the purpose of Ch 4, Sec 5, [1.3.3], are those rooms containing furniture and furnishings of restricted fire risk (whether cabins, public spaces, offices or other types of accommodation) in which:*

a) case furniture such as desks, wardrobes, dressing tables, bureaux, or dressers are constructed entirely of approved non-combustible materials, except that a combustible veneer not exceeding 2 mm may be used on the working surface of such articles

b) free-standing furniture such as chairs, sofas, or tables are constructed with frames of non-combustible materials

c) draperies, curtains and other suspended textile materials have qualities of resistance to the propagation of flame not inferior to those of wool having a mass of 0,8 kg/m^2, this being determined in accordance with the Fire Test Procedures Code (see [2.22])

d) floor coverings have low flame-spread characteristics;

e) exposed surfaces of bulkheads, linings and ceilings have low flame-spread characteristics

f) upholstered furniture has qualities of resistance to the ignition and propagation of flame, this being determined in accordance with the Fire Test Procedures Code (see [2.22]), *and*

g) bedding components have qualities of resistance to the ignition and propagation of flame, this being determined in accordance with the Fire Test Procedures Code (see [2.22]).

2.40 Ro-ro passenger ship

2.40.1 *Ro-ro passenger ship means a passenger ship with ro-ro spaces or special category spaces* as defined in [2.47].

2.41 Ro-ro spaces

2.41.1 *Ro-ro spaces are spaces not normally subdivided in any way and normally extending to either a substantial length or the entire length of the ship in which motor vehicles with fuel in their tanks for their own propulsion and/or goods (packaged or in bulk, in or on rail or road cars, vehicles (including road or rail tankers), trailers, containers, pallets, demountable tanks or in or on similar stowage units or other receptacles) can be loaded and unloaded normally in a horizontal direction.*

2.42 Safety centre

2.42.1 *Safety centre is a control station dedicated to the management of emergency situations.*

Safety systems' operation, control and/or monitoring are an integral part of the safety centre.

2.43 Sauna

2.43.1 *Sauna is a hot room with temperatures normally varying between 80°C and 120°C where the heat is provided by a hot surface (e.g. by an electrically heated oven). The hot room may also include the space where the oven is located and adjacent bathrooms.*

2.44 Semi-enclosed space

2.44.1 A semi-enclosed space is a space limited by decks and/or bulkheads in such a manner that the natural conditions of ventilation in the space are notably different from those obtained on open deck.

2.45 Service spaces

2.45.1 *Service spaces are those spaces used for galleys, pantries containing cooking appliances, lockers, mail and specie rooms, store-rooms, workshops other than those forming part of the machinery spaces, and similar spaces and trunks to such spaces.*

2.45.2

a) Main pantries and pantries containing cooking appliances may contain:
   1) toasters, microwave ovens, induction heaters and similar appliances, each of them with a power of more than 5 kW; and
   2) electrically heated cooking plates and hot plates for keeping food warm, each of them with a maximum power of 5 kW.

   These pantries may also contain coffee machines, dish washers and water boilers, regardless of their power.

b) Spaces containing any electrically heated cooking plate or hot plate for keeping food warm with a power of more than 5 kW are to be regarded, for the purpose of Ch 4, Sec 5, as galleys.

2.46 Smoke damper

2.46.1 *Smoke damper is a device installed in a ventilation duct, which under normal conditions remains open allowing flow in the duct, and is closed during a fire, preventing the flow in the duct to restrict the passage of smoke and hot gases. A smoke damper is not expected to contribute to the integrity of a fire rated division penetrated by a ventilation duct. In using the above definition the following terms may be associated:*

a) automatic smoke damper is a smoke damper that closes independently in response to exposure to smoke or hot gases;

b) manual smoke damper is a smoke damper intended to be opened or closed by the crew by hand at the damper itself; and

c) remotely operated smoke damper is a smoke damper that is closed by the crew through a control located at a distance away from the controlled damper.

2.47 Special category spaces

2.47.1 *Special category spaces are those enclosed vehicle spaces above and below the bulkhead deck, into and from which vehicles can be driven and to which passengers have access. Special category spaces may be accommodated on more than one deck provided that the total overall clear height for vehicles does not exceed 10 m.*

2.48 Standard fire test

2.48.1 *A standard fire test is a test in which specimens of the relevant bulkheads or decks are exposed in a test furnace to temperatures corresponding approximately to the standard time-temperature curve in accordance with the test method specified in the Fire Test Procedures Code* (see [2.22]).

2.49 Steel or other equivalent material

2.49.1 *Steel or other equivalent material means any non-combustible material which, by itself or due to insulation provided, has structural and integrity properties equivalent to steel at the end of the applicable exposure to the standard fire test (e.g., aluminium alloy with appropriate insulation).*

2.50 Tanker

2.50.1 *Tanker is a cargo ship constructed or adapted for the carriage in bulk of liquid cargoes of an inflammable nature.*

Note 1: For the purpose of this Chapter, the term tanker includes the following service notations (see Pt A, Ch 1, Sec 2, Tab 1): **chemical tanker**, **combination carrier/OBO**, **combination carrier/OOC**, **oil tanker**, **FLS tanker**, **oil recovery** or **liquefied gas carrier**.

2.51 Vehicle carrier

2.51.1 *Vehicle carrier means a cargo ship which only carries cargo in ro-ro spaces or vehicle spaces, and which is designed for the carriage of unoccupied motor vehicles without cargo, as cargo.*

2.52 Vehicle spaces

2.52.1 *Vehicle spaces are cargo spaces intended for the carriage of motor vehicles with fuel in their tanks for their own propulsion, including special category spaces.*

2.53 Weather decks

2.53.1 *Weather deck is a deck which is completely exposed to the weather from above and from at least two sides.*

2.54 Winching area

2.54.1 *Winching area is a pick-up area provided for the transfer by helicopter of personnel or stores to or from the ship, while the helicopter hovers above the deck.*

Section 2 Prevention of Fire

1 Probability of ignition

1.1 Arrangements for fuel oil, lubrication oil and other flammable oils

1.1.1 Limitation in the use of oils as fuel

See Ch 1, Sec 1, [2.12].

1.1.2 Arrangements for fuel oil

See Ch 1, Sec 10.

1.1.3 Arrangements for lubricating oil

See Ch 1, Sec 10.

1.1.4 Arrangements for other flammable oils

See Ch 1, Sec 10.

1.2 Arrangements for gaseous fuel for domestic purposes

1.2.1 *Where gaseous fuel is used for domestic purposes the arrangements for the storage, distribution and utilisation of the fuel shall be such that, having regard to the hazards of fire and explosion which the use of such fuel may entail, the safety of the ship and the persons on board is preserved.*

See also Ch 1, Sec 10.

1.2.2 Gaseous fuel systems may only be considered for cargo ships.

1.2.3 *Storage of the gas bottles is to be located on the open deck or in a well ventilated space which opens only to the open deck.*

1.3 Miscellaneous items of ignition sources and ignitability

1.3.1 Electric radiators

Electric radiators, if used, shall be fixed in position and so constructed as to reduce fire risks to a minimum. No such radiators shall be fitted with an element so exposed that clothing, curtains, or other similar materials can be scorched or set on fire by heat from the element.

1.3.2 Cellulose-nitrate based films

Cellulose-nitrate based films shall not be used for cinematograph installations.

1.3.3 Waste receptacles

In principle, *all waste receptacles shall be constructed of non-combustible materials with no openings in the sides or bottom.*

1.3.4 Insulation surfaces against oil penetration

In spaces where penetration of oil products is possible, the surface of insulation shall be impervious to oil or oil vapours.

1.3.5 Primary deck coverings

Primary deck coverings, if applied within accommodation and service spaces and control stations or if applied on cabin balconies of passenger ships, shall be of approved material which will not readily ignite, this being determined in accordance with the Fire Test Procedures Code (see Ch 4, Sec 1, [2.22]).

2 Fire growth potential

2.1 Control of air supply and flammable liquid to the space

2.1.1 Closing appliances and stopping devices of ventilation

a) *The main inlets and outlets of all ventilation systems shall be capable of being closed from outside the spaces being ventilated. The means of closing shall be easily accessible as well as prominently and permanently marked and shall indicate whether the shut-off is open or closed.*

   Ventilation inlets and outlets located at outside boundaries are to be fitted with closing appliances as required above and need not comply with Ch 4, Sec 5, [6.4.1].

b) Power ventilation of accommodation spaces, service spaces, cargo spaces, control stations and machinery spaces shall be capable of being stopped from an easily accessible position outside the space being served. This position shall not be readily cut off in the event of a fire in the spaces served.

These requirements do not apply to closed recirculating systems within a single space.

c) In passenger ships carrying more than 36 passengers, all power ventilation, except machinery space and cargo space ventilation and any alternative system which may be required under Ch 4, Sec 4, [2.1.1], shall be fitted with controls so grouped that all fans may be stopped from either of two separate positions which shall be situated as far apart as practicable. Fans serving power ventilation systems to cargo spaces shall be capable of being stopped from a safe position outside such spaces.

2.1.2 Means of control in machinery spaces

a) Means of control shall be provided for opening and closure of skylights, closure of openings in funnels which normally allow exhaust ventilation and closure of ventilator dampers.

The controls of ventilation fans and fire dampers serving engine rooms should also comply with Ch 4, Sec 15, [8.2.1], Note 1.

b) Means of control shall be provided for stopping ventilating fans. Controls provided for the power ventilation serving machinery spaces shall be grouped so as to be operable from two positions, one of which shall be outside such spaces. The means provided for stopping the power ventilation of the machinery spaces shall be entirely separate from the means provided for stopping ventilation of other spaces.

c) Means of control shall be provided for stopping forced and induced draught fans, oil fuel transfer pumps, oil fuel unit pumps, lubricating oil service pumps, thermal oil circulating pumps and oil separators (purifiers). However, items d) and e) hereafter need not apply to oily water separators.

d) The controls required in a) to c) above shall be located outside the space concerned so they will not be cut off in the event of fire in the space they serve.

In machinery spaces of category A, controls to close off ventilation ducts and pipes are to be installed with due regard to the hot gases produced by a fire in the space concerned.

e) In passenger ships, the controls required in items a) to d) above and in Ch 4, Sec 4, [3.2.1] and Ch 4, Sec 5, [4.2.2] and the controls for any required fire-extinguishing system shall be situated at one control position or grouped in as few positions as possible to the satisfaction of the Society. Such positions shall have a safe access from the open deck.

2.1.3 Closing appliances in emergency generator rooms

The following requirements apply to closable ventilation louvers and ventilator closing appliances serving emergency generator rooms, where fitted:

a) Ventilation louvers and closing appliances may either be hand-operated or power-operated (hydraulic/pneumatic/electric) and are to be operable under a fire condition.

b) Hand-operated ventilation louvers and closing appliances are to be kept open during normal operation of the vessel. Corresponding instruction plates are to be provided at the location where hand-operation is provided.

c) Power-operated ventilation louvers and closing appliances shall be of a fail-to-open type. Closed power-operated ventilation louvers and closing appliances are acceptable during normal operation of the vessel. Power-operated ventilation louvers and closing appliances shall open automatically whenever the emergency generator is starting/in operation.

d) It shall be possible to close ventilation openings by a manual operation from a clearly marked safe position outside the space where the closing operation can be easily confirmed. The louver status (open/closed) shall be indicated at this position. Such closing shall not be possible from any other remote position.

Note 1: See also the requirements of Pt B, Ch 11, Sec 12, [9.1] regarding closing appliances for ventilation systems.

2.2 Fire protection materials

2.2.1 Use of non-combustible materials

a) Insulating materials

Insulating materials shall be non-combustible, except in cargo spaces, mail rooms, baggage rooms and refrigerated compartments of service spaces. Vapour barriers and adhesives used in conjunction with insulation, as well as insulation of pipe fittings for cold service systems, need not be of non-combustible materials, but they shall be kept to the minimum quantity practicable and their exposed surfaces shall have low flame-spread characteristics.

Cold service means refrigeration systems and chilled water piping for air conditioning systems.

b) Ceilings and linings

1) Item 2 below applies to passenger ships and item 3 applies to cargo ships.

2) Except in cargo spaces, all linings, grounds, draught stops and ceilings shall be of non-combustible materials except in mail rooms, baggage rooms, saunas or refrigerated compartments of service spaces.

3) *All linings, ceilings, draught stops and their associated grounds shall be of non-combustible materials:*
   - *in accommodation and service spaces and control stations for ships where method IC is specified as referred to in Ch 4, Sec 5, [1.4.1]; and*
   - *in corridors and stairway enclosures serving accommodation and service spaces and control stations for ships where methods IIC or IIIC are specified as referred to in Ch 4, Sec 5, [1.4.1].*

c) *Partial bulkheads and decks on passenger ships*

1) *Partial bulkheads or decks used to subdivide a space for utility or artistic treatment shall be of non-combustible materials.*

2) *Linings, ceilings and partial bulkheads or decks used to screen or to separate adjacent cabin balconies shall be of non-combustible materials.*

2.2.2 Use of combustible materials

a) *General*

1) Item 2) below applies to passenger ships and item 3) applies to cargo ships.

2) *"A", "B" or "C" class divisions in accommodation and service spaces and cabin balconies which are faced with combustible materials, facings, mouldings, decorations and veneers shall comply with the provisions of b) to d) below and Article [3]. However, the provisions of c) need not apply to cabin balconies.*

3) *Non-combustible bulkheads, ceilings and linings fitted in accommodation and service spaces may be faced with combustible materials, facings, mouldings, decorations and veneers provided such spaces are bounded by non-combustible bulkheads, ceilings and linings in accordance with the provisions of b) to d) below and article [3].*

b) *Maximum calorific value of combustible materials*

Combustible materials used on the surfaces and linings specified in item a) shall have a calorific value not exceeding 45 MJ/m^2 of the area for the thickness used. The requirements of this paragraph are not applicable to the surfaces of furniture fixed to linings or bulkheads.

c) *Total volume of combustible materials*

Where combustible materials are used in accordance with the previous item a), the total volume of combustible facings, mouldings, decorations and veneers in accommodation and service spaces shall not exceed a volume equivalent to 2,5 mm veneer on the combined area of the walls and ceiling linings. Furniture fixed to linings, bulkheads or decks need not be included in the calculation of the total volume of combustible materials.

d) *Low flame-spread characteristics of exposed surface in passenger ships*

The following surfaces shall have low flame-spread characteristics in accordance with the Fire Test Procedures Code:

1) *exposed surfaces in corridors and stairway enclosures and of bulkhead and ceiling linings in accommodation and service spaces (except saunas) and control station*

2) *surfaces and grounds in concealed or inaccessible spaces in accommodation and services spaces and control stations*

3) *exposed surfaces of cabin balconies, except for natural wood decking systems.*

e) *Low flame spread characteristics of exposed surface in cargo ships*

The following surfaces shall have low flame spread characteristics in accordance with the Fire Test Procedures Code:

1) *exposed surfaces in corridors and stairway enclosures and of ceilings in accommodation and service spaces (except saunas) and control stations; and*

2) *surfaces and grounds in concealed or inaccessible spaces in accommodation and service spaces and control stations.*

2.2.3 Furniture in stairway enclosures

a) *[2.2.3] applies to passenger ships.*

b) *Furniture in stairway enclosures shall be limited to seating. It shall be fixed, limited to six seats on each deck in each stairway enclosure, be of restricted fire risk determined in accordance with the Fire Test Procedures Code, and shall not restrict the passenger escape route. The Society may permit additional seating in the main reception area within a stairway enclosure if it is fixed, non-combustible and does not restrict the passenger escape route. Furniture shall not be permitted in passenger and crew corridors forming escape routes in cabin areas. In addition to the above, lockers of non-combustible material, providing storage for non-hazardous safety equipment required by these regulations, may be permitted.*

Drinking water dispensers and ice cube machines may be permitted in corridors provided they are fixed and do not restrict the width of the escape routes. This applies as well to decorative flower or plant arrangements, statues or other objects of art such as paintings and tapestries in corridors and stairways

2.2.4 Furniture and furnishings on cabin balconies of passenger ships

On passenger ships, furniture and furnishings shall comply with Ch 4, Sec 1, [2.39.1], items a), b), c), f) and g) unless such balconies are protected by a fixed pressure water-spraying and fixed fire detection and alarm systems complying with Ch 4, Sec 3, [4.6] and Ch 4, Sec 6, [5.1.3].

3 Smoke generation potential and toxicity

3.1 Paints, varnishes and other finishes

3.1.1 *Paints, varnishes and other finishes used on exposed interior surfaces shall not be capable of producing excessive quantities of smoke and toxic products, this being determined in accordance with the Fire Test Procedures Code.*

3.1.2 This requirement only applies to accommodation spaces, service spaces and control stations as well as stairway enclosures.

3.1.3 *On passenger ships, paints, varnishes and other finishes used on exposed surfaces of cabin balconies shall not be capable of producing excessive quantities of smoke and toxic products, this being determined in accordance with the Fire Test Procedures Code.*

3.2 Primary deck coverings

3.2.1 *Primary deck coverings, if applied within accommodation and service spaces and control stations, shall be of approved material which will not give rise to smoke or toxic or explosive hazards at elevated temperatures, this being determined in accordance to the Fire Test Procedures Code.*

3.2.2 *On passenger ships, primary deck coverings on cabin balconies shall be of approved material which will not give rise to smoke or toxic or explosive hazards at elevated temperatures, this being determined in accordance to the Fire Test Procedures Code.*

Section 3 Suppression of Fire: Detection and Alarm

1 General

1.1 Passenger ships

1.1.1 *A fixed fire detection and fire alarm system for passenger ships shall be capable of remotely and individually identifying each detector and manually operated call point.*

1.2 Minimum number of detectors

1.2.1 *Where a fixed fire detection and fire alarm system is required for the protection of spaces other than those specified in [4.2.1], at least one detector complying with the requirements given in Ch 4, Sec 15 shall be installed in each such space.*

2 Initial and periodical tests

2.1 General

2.1.1 *The function of fixed fire detection and fire alarm systems required by the relevant Sections of this Chapter shall be tested under varying conditions of ventilation after installation.*

2.1.2 *The function of fixed fire detection and fire alarm systems shall be periodically tested to the satisfaction of the Society by means of equipment producing hot air at the appropriate temperature, or smoke or aerosol particles having the appropriate range of density or particle size, or other phenomena associated with incipient fires to which the detector is designed to respond.*

3 Protection of machinery spaces

3.1 Installation

3.1.1 *A fixed fire detection and fire alarm system* complying with the relevant provisions given in Ch 4, Sec 15 *shall be installed in:*

a) periodically unattended machinery spaces of category A*,*

b) machinery spaces of category A *where:*

  1) the installation of automatic and remote control systems and equipment has been approved in lieu of continuous manning of the space, and

  2) the main propulsion and associated machinery, including the main sources of electrical power, are provided with various degrees of automatic or remote control and are under continuous manned supervision from a control room,

c) enclosed spaces containing incinerators,

d) spaces containing an inert gas generator or an ozone generator*,*

e) spaces intended for the storage or handling of solvent (as defined in Ch 1, Sec 12, [1.3.6]) on board ships fitted with an onboard carbon capture and storage system (OCC).

For fixed fire detection and fire alarm system in unattended machinery spaces, see also Part F, Chapter 3.

3.2 Design

3.2.1 *The fixed fire detection and fire alarm system required in [3.1.1] a) shall be so designed and the detectors so positioned as to detect rapidly the onset of fire in any part of those spaces and under any normal conditions of operation of the machinery and variations of ventilation as required by the possible range of ambient temperatures. Except in spaces of restricted height and where their use is specially appropriate, detection systems using only thermal detectors shall not be permitted.*

The detection system shall initiate audible and visual alarms distinct in both respects from the alarms of any other system not indicating fire, in sufficient places to ensure that the alarms are heard and observed on the navigation bridge and by a responsible engineer officer. When the navigation bridge is unmanned, the alarm shall sound in a place where a responsible member of the crew is on duty.

4 Protection of accommodation and service spaces and control stations

4.1 Application

4.1.1 The provisions of [4.2] apply to ships of all types, those of [4.3] to [4.5] apply to passenger ships and those of [4.7] apply to cargo ships.

4.2 Smoke detectors in accommodation spaces

4.2.1 *Smoke detectors shall be installed in all stairways, corridors and escape routes within accommodation spaces. Consideration shall be given to the installation of special purpose smoke detectors within ventilation ducting.*

4.3 Requirements for passenger ships carrying more than 36 passengers

4.3.1 *A fixed fire detection and fire alarm system shall be so installed and arranged as to provide smoke detection in service spaces, control stations and accommodation spaces, including corridors, stairways and escape routes within accommodation spaces. Smoke detectors need not be fitted in private bathrooms and galleys. Spaces having little or no fire risk such as voids, public toilets, carbon dioxide rooms and similar spaces need not be fitted with a fixed fire detection and alarm system.*

Heat detectors in lieu of smoke detectors may be installed in galleys. CO_2 rooms need not be protected by a fire detection system or a sprinkler system.

Detectors fitted in cabins, when activated, shall also be capable of emitting, or cause to be emitted, an audible alarm within the space where they are located.

4.4 Requirements for passenger ships carrying not more than 36 passengers

4.4.1 *There shall be installed throughout each separate zone, whether vertical or horizontal, in all accommodation and service spaces and, where it is considered necessary by the Society, in control stations, except spaces which afford no substantial fire risk such as void spaces, sanitary spaces, etc., either:*

a) a fixed fire detection and fire alarm system so installed and arranged as to detect the presence of fire in such spaces and providing smoke detection in corridors, stairways and escape routes within accommodation spaces. Detectors fitted in cabins, when activated, shall also be capable of emitting, or cause to be emitted, an audible alarm within the space where they are located; or

b) an automatic sprinkler, fire detection and fire alarm system of an approved type complying with the relevant requirements of Ch 4, Sec 15 and so installed and arranged as to protect such spaces and, in addition, a fixed fire detection and fire alarm system so installed and arranged as to provide smoke detection in corridors, stairways and escape routes within accommodation spaces.

CO_2 rooms need not be protected by a fire detection system or a sprinkler system.

4.5 Protection of atriums

4.5.1 *The entire main vertical zone containing the atrium shall be protected throughout with a smoke detection system.*

4.6 Protection of cabin balconies on passenger ships

4.6.1 A fixed fire detection and fire alarm system complying with the requirements of Ch 4, Sec 15 is to be installed on cabin balconies to which Ch 4, Sec 2, [2.2.4] applies, when furniture and furnishings on such balconies are not defined in Ch 4, Sec 1, [2.39.1], items a), b), c), f) and g).

4.7 Cargo ships

4.7.1 *Accommodation and service spaces and control stations of cargo ships shall be protected by a fixed fire detection and fire alarm system and/or an automatic sprinkler, fire detection and fire alarm system as follows, depending on a protection method adopted in accordance with Ch 4, Sec 5, [1.4.1].*

a) Method IC

A fixed fire detection and fire alarm system shall be so installed and arranged as to provide smoke detection in all corridors, stairways and escape routes within accommodation spaces.

b) Method IIC

An automatic sprinkler, fire detection and fire alarm system of an approved type complying with the relevant requirements of Ch 4, Sec 15 shall be so installed and arranged as to protect accommodation spaces, galleys and other service spaces, except spaces which afford no substantial fire risk such as void spaces, sanitary spaces, etc. In addition, a fixed fire detection and fire alarm system shall be so installed and arranged as to provide smoke detection in all corridors, stairways and escape routes within accommodation spaces.

c) Method IIIC

A fixed fire detection and fire alarm system shall be so installed and arranged as to detect the presence of fire in all accommodation spaces and service spaces, providing smoke detection in corridors, stairways and escape routes within accommodation spaces, except spaces which afford no substantial fire risk such as void spaces, sanitary spaces, etc. In addition, a fixed fire detection and fire alarm system shall be so installed and arranged as to provide smoke detection in all corridors, stairways and escape routes within accommodation spaces.

CO_2 rooms need not be protected by a fire detection system or a sprinkler system.

5 Protection of cargo spaces

5.1 Application and general requirements

5.1.1 The present Article applies to passenger ships.

5.1.2 *A fixed fire detection and fire alarm system* complying with the requirements of Ch 4, Sec 15 *or a sample extraction smoke detection system* complying with the requirements of Ch 4, Sec 15 *shall be provided in any cargo space which, in the opinion of the Society, is not accessible, except where it is shown to the satisfaction of the Society that the ship is engaged on voyages of such short duration that it would be unreasonable to apply this requirement.*

6 Manually operated call points

6.1 General requirements

6.1.1 *Manually operated call points complying with the requirements of Ch 4, Sec 15 shall be installed throughout the accommodation spaces, service spaces and control stations. One manually operated call point shall be located at each exit. Manually operated call points shall be readily accessible in the corridors of each deck such that no part of the corridor is more than 20 m from a manually operated call point.*

7 Inspection hatches

7.1 Application

7.1.1 The present Article applies to passenger ships.

7.2 Inspection hatches

7.2.1 *The construction of ceilings and bulkheads shall be such that it will be possible, without impairing the efficiency of the fire protection, for the fire patrols to detect any smoke originating in concealed and inaccessible places, except where in the opinion of the Society there is no risk of fire originating in such places.*

8 Fire alarm signalling systems

8.1 Application

8.1.1 The present Article applies to passenger ships.

8.2 Control panel

8.2.1 *The control panel of fixed fire detection and fire alarm systems shall be designed on the fail-safe principle, e.g. an open detector circuit shall cause an alarm condition.*

8.3 Passenger ships carrying more than 36 passengers

8.3.1 *Passenger ships carrying more than 36 passengers shall have the fire detection alarms for the systems required by [4.3] centralized in a continuously manned central control station. In addition, controls for remote closing of the fire doors and shutting down the ventilation fans shall be centralized in the same location. The ventilation fans shall be capable of reactivation by the crew at the continuously manned control station. The control panels in the central control station shall be capable of indicating open or closed positions of fire doors and closed or off status of the detectors, alarms and fans. The control panel shall be continuously powered and shall have an automatic change-over to standby power supply in case of loss of normal power supply. The control panel shall be powered from the main source of electrical power and the emergency source of electrical power defined in Pt D, Ch 11, Sec 5, [2] unless other arrangements are permitted by the Rules, as applicable.*

8.4 Special alarm

8.4.1 *A special alarm, operated from the navigation bridge or fire control station, shall be fitted to summon the crew. This alarm may be part of the ship's general alarm system and shall be capable of being sounded independently of the alarm to the passenger spaces.*

9 Protection of battery rooms

9.1 Li-ion batteries above 20kWh

9.1.1 In battery rooms, a combined heat and smoke detection and alarm system, complying with the requirements of Ch 4, Sec 15, [8],is to be installed.

Section 4 Suppression of Fire: Control of Smoke Spread

1 General

1.1 Application

1.1.1 The provisions of [2.1] to [4.1] except [3.2.2] apply to ships of all types. Those of [3.2.2] and [5.1] apply to passenger ships.

2 Protection of control stations outside machinery spaces

2.1 General

2.1.1 *Practicable measures shall be taken for control stations outside machinery spaces in order to ensure that ventilation, visibility and freedom from smoke are maintained so that, in the event of fire, the machinery and equipment contained therein may be supervised and continue to function effectively. Alternative and separate means of air supply shall be provided and air inlets of the two sources of supply shall be so disposed that the risk of both inlets drawing in smoke simultaneously is minimized. At the discretion of the Society, such requirements need not apply to control stations situated on, and opening onto, an open deck or where local closing arrangements would be equally effective.*

The ventilation system serving safety centres may be derived from the ventilation system serving the navigation bridge, unless located in an adjacent main vertical zone.

2.1.2 For ships other than passenger ships carrying more than 36 passengers, equally effective local closing arrangements means that in the case of ventilators these are to be fitted with fire dampers or smoke dampers which are to be easily closed within the control station in order to maintain the absence of smoke in the event of fire.

3 Release of smoke from machinery spaces

3.1 Release of smoke

3.1.1 *Suitable arrangements shall be made to permit the release of smoke, in the event of fire, from the space to be protected. The normal ventilation systems may be acceptable for this purpose.*

3.2 Controls

3.2.1 *Means of control shall be provided for permitting the release of smoke and such controls shall be located outside the space concerned so that they will not be cut off in the event of fire in the space they serve.*

3.2.2 *The controls required by [3.2.1] shall be situated at one control position or grouped in as few positions as possible to the satisfaction of the Society. Such positions shall have a safe access from the open deck.*

4 Draught stops

4.1

4.1.1 *Air spaces enclosed behind ceilings, panelling or linings,* including raised floors*, shall be divided by close-fitting draught stops spaced not more than 14 m apart. In the vertical direction, such enclosed air spaces, including those behind linings of stairways, trunks, etc., shall be closed at each deck.*

5 Smoke extraction systems

5.1 Atriums

5.1.1 *Atriums shall be equipped with a smoke extraction system. The smoke extraction system shall be activated by the required smoke detection system and be capable of manual control. The fans shall be sized such that the entire volume within the space can be exhausted in 10 min or less.*

Section 5 Suppression of Fire: Containment of Fire

1 Thermal and structural boundaries

1.1 Application

1.1.1 The provisions of [1.2] apply to ships of all types, those of [1.3] apply to passenger ships, those of [1.4] apply to cargo ships and those of [1.5] apply to tankers.

1.2 Thermal and structural subdivision

1.2.1 *Ships of all types shall be subdivided into spaces by thermal and structural divisions having regard to the fire risk of the space.*

1.3 Passenger ships

1.3.1 Main vertical zones and horizontal zones

a) *In ships carrying more than 36 passengers, the hull, superstructure and deckhouses shall be subdivided into main vertical zones by A-60 class divisions. Steps and recesses shall be kept to a minimum, but where they are necessary they shall also be A-60 class divisions. Where a category (5), (9) or (10) space defined in item b) of [1.3.3] is on one side or where fuel oil tanks are on both sides of the division the standard may be reduced to A-0.*

b) *In ships carrying not more than 36 passengers, the hull, superstructure and deckhouses in way of accommodation and service spaces shall be subdivided into main vertical zones by A class divisions. These divisions shall have insulation values in accordance with Tab 3 and Tab 4.*

c) *As far as practicable, the bulkheads forming the boundaries of the main vertical zones above the bulkhead deck shall be in line with watertight subdivision bulkheads situated immediately below the bulkhead deck. The length and width of main vertical zones may be extended to a maximum of 48 m in order to bring the ends of main vertical zones to coincide with watertight subdivision bulkheads or in order to accommodate a large public space extending for the whole length of the main vertical zone provided that the total area of the main vertical zone is not greater than 1600 m^2 on any deck. The length or width of a main vertical zone is the maximum distance between the furthermost points of the bulkheads bounding it.*

   If a stairway serves two main vertical zones, the maximum length of any one main vertical zone need not be measured from the far side of the stairway enclosure. In this case all boundaries of the stairway enclosure are to be insulated as main vertical zone bulkheads and access doors leading into the stairway are to be provided from the two outside zones. The number of main vertical zones of 48 m length is not limited as long as they comply with all the requirements.

d) *Such bulkheads shall extend from deck to deck and to the shell or other boundaries.*

e) *On ships designed for special purposes, such as automobile or railroad car ferries, where the provision of main vertical zone bulkheads would defeat the purpose for which the ship is intended, equivalent means for controlling and limiting a fire shall be substituted and specifically approved by the Society.*

   However, in a ship with special category spaces, such spaces shall comply with the applicable provisions of Ch 4, Sec 13 and, where such compliance would be inconsistent with other requirements for passenger ships specified in this Chapter, the requirements of Ch 4, Sec 13 shall prevail.

1.3.2 Bulkheads within a main vertical zone

a) *For ships carrying more than 36 passengers, bulkheads which are not required to be A class divisions shall be at least B class or C class divisions as prescribed in Tab 1 and Tab 2.*

b) *For ships carrying not more than 36 passengers, bulkheads within accommodation and service spaces which are not required to be A class divisions shall be at least B class or C class divisions as prescribed in Tab 3 and Tab 4. In addition, corridor bulkheads, where not required to be A class, shall be B class divisions which shall extend from deck to deck except:*

   1) *when continuous B class ceilings or linings are fitted on both sides of the bulkhead, the portion of the bulkhead behind the continuous ceiling or lining shall be of material which, in thickness and composition, is acceptable in the construction of B class divisions, but which shall be required to meet B class integrity standards only in so far as is reasonable and practicable in the opinion of the Society; and*

   2) *in the case of a ship protected by an automatic sprinkler system complying with the provisions of* Ch 4, Sec 15*, the corridor bulkheads may terminate at a ceiling in the corridor provided such bulkheads and ceilings are of B class standard in compliance with* [1.3.4]*. All doors and frames in such bulkheads shall be of non-combustible materials and shall have the same fire integrity as the bulkhead in which they are fitted.*

c) Bulkheads required to be B class divisions, except corridor bulkheads as prescribed in item b) above, shall extend from deck to deck and to the shell or other boundaries. However, where a continuous B class ceiling or lining is fitted on both sides of a bulkhead which is at least of the same fire resistance as the adjoining bulkhead, the bulkhead may terminate at the continuous ceiling or lining.

Table 1 : Bulkheads not bounding either main vertical zones or horizontal zones in passenger ships carrying more than 36 passengers

SPACES		(1)	(2)	(3)	(4)	(5)	(6)	(7)	(8)	(9)	(10)	(11)	(12)	(13)	(14)
Control stations	(1)	B-0 [a]	A-0	A-0	A-0	A-0	A-60	A-60	A-60	A-0	A-0	A-60	A-60	A-60	A-60
Stairways	(2)		A-0 [a]	A-0	A-0	A-0	A-0	A-15	A-15	A-0 [c]	A-0	A-15	A-30	A-15	A-30
Corridors	(3)			B-15	A-60	A-0	B-15	B-15	B-15	B-15	A-0	A-15	A-30	A-0	A-30
Evacuation stations and external escape routes	(4)				–	A-0	A-60 [b][d]	A-60 [b][d]	A-60 [b][d]	A-0 [d]	A-0	A-60 [b]	A-60 [b]	A-60 [b]	A-60 [b]
Open deck spaces	(5)					–	A-0	A-0	A-0	A-0	A-0	A-0	A-0	A-0	A-0
Accommodation spaces of minor fire risk	(6)						B-0	B-0	B-0	C	A-0	A-0	A-30	A-0	A-30
Accommodation spaces of moderate fire risk	(7)							B-0	B-0	C	A-0	A-15	A-60	A-15	A-60
Accommodation spaces of greater fire risk	(8)								B-0	C	A-0	A-30	A-60	A-15	A-60
Sanitary and similar spaces	(9)									C	A-0	A-0	A-0	A-0	A-0
Tanks, voids and auxiliary machinery spaces having little or no fire risk	(10)										A-0 [a]	A-0	A-0	A-0	A-0
Auxiliary machinery spaces, cargo spaces, cargo and other oil tanks and other similar spaces of moderate fire risk	(11)											A-0 [a]	A-0	A-0	A-15
Machinery spaces and main galleys	(12)												A-0 [a]	A-0	A-60
store-rooms, workshops, pantries etc.	(13)													A-0 [a]	A-0
Other spaces in which flammable liquids are stowed	(14)														A-30

Note 1: (to be applied to Tab 1 and Tab 2, as appropriate)

[a] : Where adjacent spaces are in the same numerical category and letter "a" appears, a bulkhead or deck between such spaces need not be fitted if deemed unnecessary by the Society. For example, in category (12) a bulkhead need not be required between a galley and its annexed pantries provided the pantry bulkheads and decks maintain the integrity of the galley boundaries. A bulkhead is, however, required between a galley and machinery space even though both spaces are in category (12).

[b] : The ship's side, to the waterline in the lightest seagoing condition, superstructure and deckhouse sides situated below and adjacent to liferafts and evacuation slides may be reduced to A-30.

[c] : Where public toilets are installed completely within the stairway enclosure, the public toilet bulkhead within the stairway enclosure can be of B class integrity.

[d] : Where spaces of category (6), (7), (8) and (9) are located completely within the outer perimeter of the assembly station, the bulkheads of these spaces are allowed to be of B-0 class integrity. Control positions for audio, video and light installations may be considered as part of the assembly station.

Table 2 : Decks not forming steps in main vertical zones nor bounding horizontal zones in passenger ships carrying more than 36 passengers

SPACE below		SPACE above													
		(1)	(2)	(3)	(4)	(5)	(6)	(7)	(8)	(9)	(10)	(11)	(12)	(13)	(14)
Control stations	(1)	A-30	A-30	A-15	A-0	A-0	A-0	A-15	A-30	A-0	A-0	A-0	A-60	A-0	A-60
Stairways	(2)	A-0	A-0	A-0	A-0	A-0	A-0	A-0	A-0	A-0	A-0	A-0	A-30	A-0	A-30
Corridors	(3)	A-15	A-0	A-0 [a]	A-60	A-0	A-0	A-15	A-15	A-0	A-0	A-0	A-30	A-0	A-30
Evacuation stations and external escape routes	(4)	A-0	A-0	A-0	A-0	–	A-0	A-0	A-0	A-0	A-0	A-0	A-0	A-0	A-0
Open deck spaces	(5)	A-0	A-0	A-0	A-0	–	A-0	A-0	A-0	A-0	A-0	A-0	A-0	A-0	A-0
Accommodation spaces of minor fire risk	(6)	A-60	A-15	A-0	A-60	A-0	A-0	A-0	A-0	A-0	A-0	A-0	A-0	A-0	A-0
Accommodation spaces of moderate fire risk	(7)	A-60	A-15	A-15	A-60	A-0	A-0	A-15	A-15	A-0	A-0	A-0	A-0	A-0	A-0
Accommodation spaces of greater fire risk	(8)	A-60	A-15	A-15	A-60	A-0	A-15	A-15	A-30	A-0	A-0	A-0	A-0	A-0	A-0
Sanitary and similar spaces	(9)	A-0	A-0	A-0	A-0	A-0	A-0	A-0	A-0	A-0	A-0	A-0	A-0	A-0	A-0
Tanks, voids and auxiliary machinery spaces having little or no fire risk	(10)	A-0	A-0	A-0	A-0	A-0	A-0	A-0	A-0	A-0	A-0 [a]	A-0	A-0	A-0	A-0
Auxiliary machinery spaces, cargo spaces, cargo and other oil tanks and other similar spaces of moderate fire risk	(11)	A-60	A-60	A-60	A-60	A-0	A-0	A-15	A-30	A-0	A-0	A-0 [a]	A-0	A-0	A-30
Machinery spaces and main galleys	(12)	A-60	A-60	A-60	A-60	A-0	A-60	A-60	A-60	A-0	A-0	A-30	A-30 [a]	A-0	A-60
store-rooms, workshops, pantries, etc.	(13)	A-60	A-30	A-15	A-60	A-0	A-15	A-30	A-30	A-0	A-0	A-0	A-0	A-0	A-0
Other spaces in which flammable liquids are stowed	(14)	A-60	A-60	A-60	A-60	A-0	A-30	A-60	A-60	A-0	A-0	A-0	A-0	A-0	A-0
Note 1: The notes of Tab 1 apply to Tab 2, as appropriate.															

1.3.3 Fire integrity of bulkheads and decks in ships carrying more than 36 passengers

a) In addition to complying with the specific provisions for fire integrity of bulkheads and decks mentioned in [1.3.1] and [1.3.2], the minimum fire integrity of all bulkheads and decks shall be as prescribed in Tab 1 and Tab 2. Where, due to any particular structural arrangements in the ship, difficulty is experienced in determining from the tables the minimum fire integrity value of any divisions, such values shall be determined to the satisfaction of the Society.

b) The following requirements shall govern application of Tab 1 and Tab 2:

1) Tab 1 shall apply to bulkheads not bounding either main vertical zones or horizontal zones.

Tab 2 shall apply to decks not forming steps in main vertical zones nor bounding horizontal zones.

2) For determining the appropriate fire integrity standards to be applied to boundaries between adjacent spaces, such spaces are classified according to their fire risk as shown in categories (1) to (14) below. Where the contents and use of a space are such that there is a doubt as to its classification for the purpose of the present Section, or where it is possible to assign two or more classifications to a space, it shall be treated as a space within the relevant category having the most stringent boundary requirements. Smaller, enclosed rooms within a space that have less than 30 % communicating openings to that space are considered separate spaces. The fire integrity of the boundary bulkheads and decks of such smaller rooms shall be as prescribed in Tab 1 and Tab 2. The title of each category is intended to be typical rather than restrictive. The number in parentheses preceding each category refers to the applicable column or row in the tables.

- *(1) Control stations*

  Spaces containing emergency sources of power and lighting

  Wheelhouse and chartroom

  Spaces containing the ship's radio equipment

  Fire control stations

  Control room for propulsion machinery when located outside the propulsion machinery space

  Spaces containing centralized fire alarm equipment

  Spaces containing centralized emergency public address system stations and equipment.
- *(2) Stairways*

  Interior stairways, lifts, totally enclosed emergency escape trunks, and escalators (other than those wholly contained within the machinery spaces) for passengers and crew and enclosures thereto

  In this connection a stairway which is enclosed at only one level shall be regarded as part of the space from which it is not separated by a fire door.
- *(3) Corridors*

  Passenger and crew corridors and lobbies.
- *(4) Evacuation stations and external escape routes*

  Survival craft stowage area

  Open deck spaces and enclosed promenades forming lifeboat and liferaft embarkation and lowering stations

  Assembly stations, internal and external

  External stairs and open decks used for escape routes

  The ship's side to the waterline in the lightest seagoing condition, superstructure and deckhouse sides situated below and adjacent to the liferaft and evacuation slide embarkation areas.
- *(5) Open deck spaces*

  Open deck spaces and enclosed promenades clear of lifeboat and liferaft embarkation and lowering stations. To be considered in this category, enclosed promenades shall have no significant fire risk, meaning that furnishings shall be restricted to deck furniture. In addition, such spaces are to be naturally ventilated through permanent openings, having a combined area of at least 30% of the total area of the space boundaries adjacent to the outside.

  Air spaces (the space outside superstructures and deckhouses).
- *(6) Accommodation spaces of minor fire risk*

  Cabins containing furniture and furnishings of restricted fire risk

  Offices and dispensaries containing furniture and furnishings of restricted fire risk

  Public spaces containing furniture and furnishings of restricted fire risk and having a deck area of less than 50 m^2.
- *(7) Accommodation spaces of moderate fire risk*

  Spaces as in category (6) above but containing furniture and furnishings of other than restricted fire risk

  Public spaces containing furniture and furnishings of restricted fire risk and having a deck area of 50 m^2 or more

  Isolated lockers and small store-rooms in accommodation spaces having areas less than 4 m^2 (in which flammable liquids are not stowed)

  Motion picture projection and film stowage rooms

  Diet kitchens (containing no open flame)

  Cleaning gear lockers (in which flammable liquids are not stowed)

  Laboratories (in which flammable liquids are not stowed)

  Pharmacies

  Small drying rooms (having a deck area of 4 m^2 or less)

  Specie rooms

  Operating rooms.
- *(8) Accommodation spaces of greater fire risk*

  Public spaces containing furniture and furnishings of other than restricted fire risk and having a deck area of 50 m^2 or more

  Barber shops and beauty parlours

  Sale shops

  Saunas.

- *(9) Sanitary and similar spaces*

  Communal sanitary facilities, showers, baths, water closets, etc.

  Small laundry rooms

  Indoor swimming pool area

  Isolated pantries containing no cooking appliances in accommodation spaces

  Private sanitary facilities shall be considered a portion of the space in which they are located.

- *(10) Tanks, voids and auxiliary machinery spaces having little or no fire risk*

  Water tanks forming part of the ship's structure

  Voids and cofferdams

  Auxiliary machinery spaces which do not contain machinery having a pressure lubrication system and where storage of combustibles is prohibited, such as:

  - *ventilation and air-conditioning rooms*
  - *windlass room*
  - *steering gear room*
  - *stabiliser equipment room*
  - *electric propulsion motor room*
  - *rooms containing section switchboards and purely electrical equipment other than oil-filled electrical transformers (above 10 kVA)*
  - *shaft alleys and pipe tunnels, and*
  - *spaces for pumps and refrigeration machinery (not handling or using flammable liquids)*

  Closed trunks serving the spaces listed above

  Other closed trunks such as pipe and cable trunks

  Spaces dedicated to urea or sodium hydroxide solution tanks for selective catalytic reduction (SCR) systems, exhaust gas recirculation (EGR) systems or exhaust gas cleaning systems (EGCS), when separated from the engine room.

  Ballast Water Management Rooms (BWMR) not containing oil-fired inert gas generators (i.e. for ballast water management systems other than category 3b and 3c according to Ch 1, Sec 13, Tab 1).

- *(11) Auxiliary machinery spaces, cargo spaces, cargo and other oil tanks and other similar spaces of moderate fire risk*

  Cargo oil tanks

  Cargo holds, trunkways and hatchways

  Refrigerated chambers

  Oil fuel tanks (where installed in a separate space with no machinery)

  Shaft alleys and pipe tunnels allowing storage of combustibles

  Auxiliary machinery spaces as in category (10) which contain machinery having a pressure lubrication system or where storage of combustibles is permitted

  Oil fuel filling stations

  Spaces containing oil-filled electrical transformers (above 10 kVA)

  Spaces containing turbine and reciprocating steam engine driven auxiliary generators and small internal combustion engines of power output up to 110 kW driving generators, sprinkler, drencher or fire pumps, bilge pumps, etc.

  Closed trunks serving the spaces listed above

  Spaces intended for the storage or handling of solvent (as defined in Ch 1, Sec 12, [1.3.6]) on board ships fitted with an onboard carbon capture and storage system (OCC).

- *(12) Machinery spaces and main galleys*

  Main propulsion machinery rooms (other than electric propulsion motor rooms) and boiler rooms

  Auxiliary machinery spaces other than those in categories (10) and (11) which contain internal combustion machinery or other oil-burning, heating or pumping units

  Main galleys and annexes

  Trunks and casings to the spaces listed above

  Ballast Water Management Rooms (BWMR) containing oil-fired inert gas generators (i.e. for ballast water management systems category 3b and 3c according to Ch 1, Sec 13, Tab 1).

- *(13) Store-rooms, workshops, pantries, etc.*

  Main pantries not annexed to galleys

  Main laundry

  Large drying rooms (having a deck area of more than 4 m²)

  Miscellaneous stores

  Mail and baggage rooms

  Garbage rooms

  Workshops (not part of machinery spaces, galleys, etc.)

  Lockers and store-rooms having areas greater than 4 m², other than those spaces that have provisions for the storage of flammable liquids

  Spaces where the storage of liquid or solid chemicals for ballast water management systems is intended if no flammable products are stored

Note 1: Only chemical injection (cat.6 as per Ch 1, Sec 13, Tab 1), in-line flocculation (cat.2 as per Ch 1, Sec 13, Tab 1) and technologies using neutralizer injection (cat.4, 5, 6 and 7 as per Ch 1, Sec 13, Tab 1) require chemical or additive storage.

- *(14) Other spaces in which flammable liquids are stowed*

  Paint lockers

  Store-rooms containing flammable liquids (including dyes, medicines, etc.)

  Laboratories (in which flammable liquids are stowed)

  Spaces where the storage of liquid or solid chemicals for ballast water management systems is intended if flammable products are stored

Note 2: Only chemical injection (cat.6 as per Ch 1, Sec 13, Tab 1), in-line flocculation (cat.2 as per Ch 1, Sec 13, Tab 1) and technologies using neutralizer injection (cat.4, 5, 6 and 7 as per Ch 1, Sec 13, Tab 1) require chemical or additive storage.

Spaces where oxygen is stored or produced.

3) *Notwithstanding the provisions of [1.3.2], there are no special requirements for material or integrity of boundaries where only a dash appears in the tables.*

4) *The Society shall determine in respect of category (5) spaces whether the insulation values in Tab 1 shall apply to ends of deckhouses and superstructures, and whether the insulation values in Tab 2 shall apply to weather decks. In no case shall the requirements of category (5) of Tab 1 or Tab 2 necessitate enclosure of spaces which in the opinion of the Society need not be enclosed.*

c) *Continuous B class ceilings or linings, in association with the relevant decks or bulkheads, may be accepted as contributing, wholly or in part, to the required insulation and integrity of a division.*

d) *In approving structural fire protection details, the Society shall have regard to the risk of heat transmission at intersections and terminal points of required thermal barriers.*

e) *Construction and arrangement of saunas*

- *The perimeter of the sauna shall be of "A" class boundaries and may include changing rooms, showers and toilets. The sauna shall be insulated to "A-60" standard against other spaces except those inside the perimeter and spaces of categories (5), (9) and (10).*
- *Bathrooms with direct access to saunas may be considered as part of them. In such cases, the door between sauna and the bathroom need not comply with fire safety requirements.*
- *The traditional wooden lining on the bulkheads and ceiling are permitted in the sauna. The ceiling above the oven shall be lined with a non-combustible plate with an air gap of at least 30 mm. The distance from the hot surfaces to combustible materials shall be at least 500 mm or the combustible materials shall be protected (e.g. non-combustible plate with an air gap of at least 30 mm).*
- *The traditional wooden benches are permitted to be used in the sauna.*
- *The sauna door shall open outwards by pushing.*
- *Electrically heated ovens shall be provided with a timer.*

Note 3: For the purpose of this Chapter, hammams are treated as saunas.

f) Battery rooms containing Li Ion-type batteries are to be considered as a machinery space of category A for structural fire protection purpose. The boundaries between battery rooms containing Li Ion-type batteries and machinery spaces of category A are to have A-60 fire integrity.

1.3.4 Fire integrity of bulkheads and decks in ships carrying not more than 36 passengers

a) In addition to complying with the specific provisions for fire integrity of bulkheads and decks mentioned in [1.3.1] and [1.3.2], the minimum fire integrity of bulkheads and decks shall be as prescribed in Tab 3 and Tab 4.

b) The following requirements govern application of the tables:

1) Tab 3 and Tab 4 shall apply, respectively, to the bulkheads and decks separating adjacent spaces.

2) For determining the appropriate fire integrity standards to be applied to divisions between adjacent spaces, such spaces are classified according to their fire risk as shown in categories (1) to (11) below. Where the contents and use of a space are such that there is a doubt as to its classification for the purpose of the present Section, or where it is possible to assign two or more classifications to a space, it shall be treated as a space within the relevant category having the most stringent boundary requirements. Smaller, enclosed rooms within a space that have less than 30% communicating openings to that space are considered separate spaces. The fire integrity of the boundary bulkheads and decks of such smaller rooms shall be as prescribed in Tab 3 and Tab 4. The title of each category is intended to be typical rather than restrictive. The number in parentheses preceding each category refers to the applicable column or row in the tables.

- *(1) Control stations*

  Spaces containing emergency sources of power and lighting

  Wheelhouse and chartroom

  Spaces containing the ship's radio equipment

  Fire control stations

  Control room for propulsion machinery when located outside the machinery space

  Spaces containing centralized fire alarm equipment.

- *(2) Corridors*

  Passenger and crew corridors and lobbies.

- *(3) Accommodation spaces*

  Spaces as defined in Ch 4, Sec 1, [2.2] excluding corridors.

- *(4) Stairways*

  Interior stairways, lifts, totally enclosed emergency escape trunks, and escalators (other than those wholly contained within the machinery spaces) and enclosures thereto

  In this connection, a stairway which is enclosed only at one level shall be regarded as part of the space from which it is not separated by a fire door.

- *(5) Service spaces (low risk)*

  Lockers and store-rooms not having provisions for the storage of flammable liquids and having areas less than 4 m² and drying rooms and laundries.

  Spaces where the storage of liquid or solid chemicals for ballast water management systems is intended if no flammable products are stored and if the area of the space is less than 4m²

Note 1: Only chemical injection (cat.6 as per Ch 1, Sec 13, Tab 1), in-line flocculation (cat.2 as per Ch 1, Sec 13, Tab 1) and technologies using neutralizer injection (cat.4, 5, 6 and 7 as per Ch 1, Sec 13, Tab 1) require chemical or additive storage.

- *(6) Machinery spaces of category A*

  Spaces as defined in Ch 4, Sec 1, [2.30]

  Ballast Water Management Rooms (BWMR) containing oil-fired inert gas generators (i.e. for ballast water management systems category 3b and 3c according to Ch 1, Sec 13, Tab 1).

- *(7) Other machinery spaces*

  Electrical equipment rooms (auto-telephone exchange, air-conditioning duct spaces)

  Spaces as defined in Ch 4, Sec 1, [2.29], excluding machinery spaces of category A.

  Spaces dedicated to urea or sodium hydroxide solution tanks for selective catalytic reduction (SCR) systems, exhaust gas recirculation (EGR) systems or exhaust gas cleaning systems (EGCS), when separated from the engine room

  Ballast Water Management Rooms (BWMR) not containing oil-fired inert gas generators (i.e. for ballast water management systems other than category 3b and 3c according to Ch 1, Sec 13, Tab 1)

  Spaces intended for the storage or handling of solvent (as defined in Ch 1, Sec 12, [1.3.6]) on board ships fitted with an onboard carbon capture and storage system (OCC).

- *(8) Cargo spaces*

  All spaces used for cargo (including cargo oil tanks) and trunkways and hatchways to such spaces, other than special category spaces.

- *(9) Service spaces (high risk)*

  Galleys, pantries containing cooking appliances, paint lockers, lockers and store-rooms having areas of 4 m² or more, spaces for the storage of flammable liquids, saunas and workshops other than those forming part of the machinery spaces.

Spaces where the storage of liquid or solid chemicals for ballast water management systems is intended if flammable products are stored or if the area of the space is above 4m^2.

Note 2: Only chemical injection (cat.6 as per Ch 1, Sec 13, Tab 1), in-line flocculation (cat.2 as per Ch 1, Sec 13, Tab 1) and technologies using neutralizer injection (cat.4, 5, 6 and 7 as per Ch 1, Sec 13, Tab 1) require chemical or additive storage.

Spaces where oxygen is stored or produced.

- *(10) Open decks*

  Open deck spaces and enclosed promenades having little or no fire risk. Enclosed promenades shall have no significant fire risk, meaning that furnishing shall be restricted to deck furniture. In addition, such spaces are to be naturally ventilated through permanent openings, having a combined area of at least 30% of the total area of the space boundaries adjacent to the outside.

  Air spaces (the space outside superstructures and deckhouses).

- *(11) Special category and ro-ro spaces*

  Spaces as defined in Ch 4, Sec 1, [2.41] and Ch 4, Sec 1, [2.47].

3) *In determining the applicable fire integrity standard of a boundary between two spaces within a main vertical zone or horizontal zone which is not protected by an automatic sprinkler system complying with the provisions of Ch 4, Sec 15 or between such zones neither of which is so protected, the higher of the two values given in the tables shall apply.*

4) *In determining the applicable fire integrity standard of a boundary between two spaces within a main vertical zone or horizontal zone which is protected by an automatic sprinkler system complying with the provisions of Ch 4, Sec 15 or between such zones both of which are so protected, the lesser of the two values given in the tables shall apply. Where a zone with sprinklers and a zone without sprinklers meet within accommodation and service spaces, the higher of the two values given in the tables shall apply to the division between the zones.*

c) *Continuous B class ceilings or linings, in association with the relevant decks or bulkheads, may be accepted as contributing, wholly or in part, to the required insulation and integrity of a division.*

d) *External boundaries which are required in Ch 4, Sec 7, [2.1.1] to be of steel or other equivalent material may be pierced for the fitting of windows and sidescuttles provided that there is no requirement for such boundaries of passenger ships to have A class integrity. Similarly, in such boundaries which are not required to have A class integrity, doors may be constructed of materials which are to the satisfaction of the Society.*

e) *In approving structural fire protection details, the Society shall have regard to the risk of heat transmission at intersections and terminal points of required thermal barriers.*

f) *Saunas shall comply with [1.3.3], item e).*

g) A navigation locker that can only be accessed from the wheelhouse should be considered as a control station with respect to the provisions of Tab 3 and the bulkhead separating the wheelhouse and such a locker should have fire integrity of at least "B-0" class.

h) Battery rooms containing Li Ion-type batteries are to be considered as a machinery space of category A for structural fire protection purpose. The boundaries between battery rooms containing Li Ion-type batteries and machinery spaces of category A are to have A-60 fire integrity.

1.3.5 Protection of stairways and lifts in accommodation area

a) *Stairways shall be within enclosures formed of A class divisions, with positive means of closure at all openings, except that:*

1) *a stairway connecting only two decks need not be enclosed, provided the integrity of the deck is maintained by proper bulkheads or self-closing doors in one 'tweendeck space. When a stairway is closed in one 'tweendeck space, the stairway enclosure shall be protected in accordance with the tables for decks in [1.3.3] or [1.3.4].*

   The door provided at this stairway enclosure is to be of the self-closing type.

2) *stairways may be fitted in the open in a public space, provided they lie wholly within the public space.*

b) *Lift trunks shall be so fitted as to prevent the passage of smoke and flame from one 'tweendeck to another and shall be provided with means of closing so as to permit the control of draught and smoke. Machinery for lifts located within stairway enclosures shall be arranged in a separate room, surrounded by steel boundaries, except that small passages for lift cables are permitted. Lifts which open into spaces other than corridors, public spaces, special category spaces, stairways and external areas shall not open into stairways included in the means of escape.*

1.3.6 Arrangement of cabin balconies

Non-load bearing partial bulkheads which separate adjacent cabin balconies shall be capable of being opened by the crew from each side for the purpose of fighting fires.

1.3.7 Protection of atriums

a) *Atriums shall be within enclosures formed of "A" class divisions having a fire rating determined in accordance with Tab 2 and Tab 4, as applicable.*

b) *Decks separating spaces within atriums shall have a fire rating determined in accordance with Tab 2 and Tab 4, as applicable.*

Table 3 : Fire integrity of bulkheads separating adjacent spaces in passenger ships carrying not more than 36 passengers

SPACES		(1)	(2)	(3)	(4)	(5)	(6)	(7)	(8)	(9)	(10)	(11)
Control stations	(1)	A-0 [c]	A-0	A-60	A-0	A-15	A-60	A-15	A-60	A-60	*	A-60
Corridors	(2)		C [e]	B-0 [e]	A-0 [a] B-0 [e]	B-0 [e]	A-60	A-0	A-0	A-15 A-0 [d]	*	A-30
Accommodation spaces	(3)			C [e]	A-0 [a] B-0 [e]	B-0 [e]	A-60	A-0	A-0	A-15 A-0 [d]	*	A-30 A-0 [d]
Stairways	(4)				A-0 [a] B-0 [e]	A-0 [a] B-0 [e]	A-60	A-0	A-0	A-15 A-0 [d]	*	A-30
Service spaces (low risk)	(5)					C [e]	A-60	A-0	A-0	A-0	*	A-0
Machinery spaces of category A	(6)						*	A-0	A-0	A-60	*	A-60
Other machinery spaces	(7)							A-0 [b]	A-0	A-0	*	A-0
Cargo spaces	(8)								*	A-0	*	A-0
Service spaces (high risk)	(9)									A-0 [b]	*	A-30
Open decks	(10)										–	A-0
Special category and ro-ro spaces	(11)											A-30

Note 1: (to be applied to Tab 3 and Tab 4, as appropriate)

[a] : For clarification as to which applies, see [1.3.2] and [1.3.5].

[b] : Where spaces are of the same numerical category and letter "b" appears, a bulkhead or deck of the rating shown in the tables is only required when the adjacent spaces are for a different purpose, e.g. in category (9). A galley next to a galley does not require a bulkhead, but a galley next to a paint room requires an A-0 bulkhead.

[c] : Bulkheads separating the wheelhouse and chartroom from each other may have a B-0 rating. No fire rating is required for those partitions separating the navigation bridge and the safety centre when the latter is within the navigation bridge.

[d] : See items b) 3) and b) 4) of [1.3.4].

[e] : For the application of item b) of [1.3.1], B-0 and C, where appearing in Tab 3, are to be read as A-0.

[f] : Fire insulation need not be fitted if the machinery space in category (7), in the opinion of the Society, has little or no fire risk

* : Where an asterisk appears in the tables, the division is required to be of steel or other equivalent material, but is not required to be of A class standard. However, where a deck, except in a category (10) space, is penetrated for the passage of electric cables, pipes and vent ducts, such penetrations are to be made tight to prevent the passage of flame and smoke. Divisions between control stations (emergency generators) and open decks may have air intake openings without means for closure, unless a fixed gas fire-extinguishing system is fitted.

For the application of item b) of [1.3.1], an asterisk, where appearing in Tab 4, except for categories (8) and (10), is to be read as A-0.

Table 4 : Fire integrity of decks separating adjacent spaces in passenger ships carrying not more than 36 passengers

SPACE below		SPACE above										
		(1)	(2)	(3)	(4)	(5)	(6)	(7)	(8)	(9)	(10)	(11)
Control stations	(1)	A-0	A-0	A-0	A-0	A-0	A-60	A-0	A-0	A-0	*	A-60
Corridors	(2)	A-0	*	*	A-0	*	A-60	A-0	A-0	A-0	*	A-30
Accommodation spaces	(3)	A-60	A-0	*	A-0	*	A-60	A-0	A-0	A-0	*	A-30 A-0 [d]
Stairways	(4)	A-0	A-0	A-0	*	A-0	A-60	A-0	A-0	A-0	*	A-30
Service spaces (low risk)	(5)	A-15	A-0	A-0	A-0	*	A-60	A-0	A-0	A-0	*	A-0
Machinery spaces of category A	(6)	A-60	A-60	A-60	A-60	A-60	*	A-60 [f]	A-30	A-60	*	A-60
Other machinery spaces	(7)	A-15	A-0	A-0	A-0	A-0	A-0	*	A-0	A-0	*	A-0
Cargo spaces	(8)	A-60	A-0	A-0	A-0	A-0	A-0	A-0	*	A-0	*	A-0
Service spaces (high risk)	(9)	A-60	A-30 A-0 [d]	A-30 A-0 [d]	A-30 A-0 [d]	A-0	A-60	A-0	A-0	A-0	*	A-30
Open decks	(10)	*	*	*	*	*	*	*	*	*	–	A-0
Special category and ro-ro spaces	(11)	A-60	A-30	A-30 A-0 [d]	A-30	A-0	A-60	A-0	A-0	A-30	A-0	A-30

Note 1: The notes to Tab 3 apply to this table as appropriate.

1.4 Cargo ships except tankers

1.4.1 Methods of protection in accommodation area

a) One of the following methods of protection shall be adopted in accommodation and service spaces and control stations:

1) Method IC

The construction of internal divisional bulkheads of non-combustible B or C class divisions generally without the installation of an automatic sprinkler, fire detection and fire alarm system in the accommodation and service spaces, except as required by item a) of Ch 4, Sec 3, [4.7.1], or

2) Method IIC

The fitting of an automatic sprinkler, fire detection and fire alarm system as required by item b) of Ch 4, Sec 3, [4.7.1] for the detection and extinction of fire in all spaces in which fire might be expected to originate, generally with no restriction on the type of internal divisional bulkheads, or

3) Method IIIC

The fitting of a fixed fire detection and fire alarm system, as required by item c) of Ch 4, Sec 3, [4.7.1], in spaces in which a fire might be expected to originate, generally with no restriction on the type of internal divisional bulkheads, except that in no case shall the area of any accommodation space or spaces bounded by an A or B class division exceed 50 m^2. However, consideration may be given by the Society to increasing this area for public spaces.

b) The requirements for the use of non-combustible materials in the construction and insulation of boundary bulkheads of machinery spaces, control stations, service spaces, etc., and the protection of the above stairway enclosures and corridors will be common to all three methods outlined in a).

c) In approving structural fire protection details, the Society shall have regard to the risk of heat transmission at intersections and terminal points of required thermal barriers.

1.4.2 Bulkheads within accommodation area

a) Bulkheads required to be B class divisions shall extend from deck to deck and to the shell or other boundaries. However, where a continuous B class ceiling or lining is fitted on both sides of the bulkhead, the bulkhead may terminate at the continuous ceiling or lining.

b) Method IC

Bulkheads not required by this or other Sections for cargo ships to be A or B class divisions shall be of at least C class construction.

c) Method IIC

There shall be no restriction on the construction of bulkheads not required by this or other Sections for cargo ships to be A or B class divisions except in individual cases where C class bulkheads are required in accordance with Tab 5.

d) Method IIIC

There shall be no restriction on the construction of bulkheads not required for cargo ships to be A or B class divisions except that the area of any accommodation space or spaces bounded by a continuous A or B class division shall in no case exceed 50 m^2, except in individual cases where C class bulkheads are required in accordance with Tab 5. However, consideration may be given by the Society to increasing this area for public space.

1.4.3 Fire integrity of bulkheads and decks

a) In addition to complying with the specific provisions for fire integrity of bulkheads and decks of cargo ships, the minimum fire integrity of bulkheads and decks shall be as prescribed in Tab 5 and Tab 6.

b) The following requirements shall govern application of Tab 5 and Tab 6:

1) Tab 5 and Tab 6 shall apply respectively to the bulkheads and decks separating adjacent spaces.

2) For determining the appropriate fire integrity standards to be applied to divisions between adjacent spaces, such spaces are classified according to their fire risk as shown in categories (1) to (11) below. Where the contents and use of a space are such that there is a doubt as to its classification for the purpose of the present Section, or where it is possible to assign two or more classifications to a space, it shall be treated as a space within the relevant category having the most stringent boundary requirements. Smaller, enclosed rooms within a space that have less than 30 % communicating openings to that space are considered separate spaces. The fire integrity of the boundary bulkheads and decks of such smaller rooms shall be as prescribed in Tab 5 and Tab 6. The title of each category is intended to be typical rather than restrictive. The number in parentheses preceding each category refers to the applicable column or row in the tables.

- *(1) Control stations*

  Spaces containing emergency sources of power and lighting

  Wheelhouse and chartroom

  Spaces containing the ship's radio equipment

  Fire control stations

  Control room for propulsion machinery when located outside the machinery space

  Spaces containing centralised fire alarm equipment.

- *(2) Corridors*

  Corridors and lobbies.

- *(3) Accommodation spaces*

  Spaces as defined in Ch 4, Sec 1, [2.2], excluding corridors.

- *(4) Stairways*

  Interior stairways, lifts, totally enclosed emergency space trunks, and escalators (other than those wholly contained within the machinery spaces) and enclosures thereto

  In this connection, a stairway which is enclosed only at one level shall be regarded as part of the space from which it is not separated by a fire door.

- *(5) Service spaces (low risk)*

  Lockers and store-rooms not having provisions for the storage of flammable liquids and having areas less than 4 m² and drying rooms and laundries.

  Spaces where the storage of liquid or solid chemicals for ballast water management systems is intended if no flammable products are stored and if the area of the space is less than 4m²

Note 1: Only chemical injection (cat.6 as per Ch 1, Sec 13, Tab 1), in-line flocculation (cat.2 as per Ch 1, Sec 13, Tab 1) and technologies using neutralizer injection (cat.4, 5, 6 and 7 as per Ch 1, Sec 13, Tab 1) require chemical or additive storage.

- *(6) Machinery spaces of category A*

  Spaces as defined in Ch 4, Sec 1, [2.30]

  Ballast Water Management Rooms (BWMR) containing oil-fired inert gas generators (i.e. for ballast water management systems category 3b and 3c according to Ch 1, Sec 13, Tab 1).

- *(7) Other machinery spaces*

  Electrical equipment rooms (auto-telephone exchange, air-conditioning duct spaces)

  Spaces as defined in Ch 4, Sec 1, [2.29], excluding machinery spaces of category A.

  Spaces dedicated to urea or sodium hydroxide solution tanks for selective catalytic reduction (SCR) systems, exhaust gas recirculation (EGR) systems or exhaust gas cleaning systems (EGCS), when separated from the engine room.

  Ballast Water Management Rooms (BWMR) not containing oil-fired inert gas generators (i.e. for ballast water management systems other than category 3b and 3c according to Ch 1, Sec 13, Tab 1)

  Spaces intended for the storage or handling of solvent (as defined in Ch 1, Sec 12, [1.3.6]) on board ships fitted with an onboard carbon capture system (OCC).

- *(8) Cargo spaces*

  All spaces used for cargo (including cargo oil tanks) and trunkways and hatchways to such spaces.

- *(9) Service spaces (high risk)*

  Galleys, pantries containing cooking appliances, saunas, paint lockers and store-rooms having areas of 4 m² or more, spaces for the storage of flammable liquids, and workshops other than those forming part of the machinery spaces.

  Spaces where the storage of liquid or solid chemicals for ballast water management systems is intended if flammable products are stored or if the area of the space is above 4 m².

Note 2: Only chemical injection (cat.6 as per Ch 1, Sec 13, Tab 1), in-line flocculation (cat.2 as per Ch 1, Sec 13, Tab 1) and technologies using neutralizer injection (cat.4, 5, 6 and 7 as per Ch 1, Sec 13, Tab 1) require chemical or additive storage.

  Spaces where oxygen is stored or produced.

- *(10) Open decks*

  Open deck spaces and enclosed promenades having little or no fire risk. To be considered in this category, enclosed promenades shall have no significant fire risk, meaning that furnishings shall be restricted to deck furniture. In addition, such spaces are to be naturally ventilated through permanent openings, having a combined area of at least 30% of the total area of the space boundaries adjacent to the outside.

  Air spaces (the space outside superstructures and deckhouses).

- *(11) Ro-ro and vehicle spaces*

  Ro-ro spaces as defined in Ch 4, Sec 1, [2.41]

  Vehicle spaces as defined in Ch 4, Sec 1, [2.52].

3) *Continuous B class ceilings or linings, in association with the relevant decks or bulkheads, may be accepted as contributing, wholly or in part, to the required insulation and integrity of a division.*

4) *External boundaries which are required in Ch 4, Sec 7, [2.1.1] to be of steel or other equivalent material may be pierced for the fitting of windows and sidescuttles provided that there is no requirement for such boundaries of cargo ships to have A class integrity. Similarly, in such boundaries which are not required to have A class integrity, doors may be constructed of materials which are to the satisfaction of the Society.*

c) *Saunas shall comply with [1.3.3], item e).*

d) A navigation locker that can only be accessed from the wheelhouse should be considered as a control station with respect to the provisions of Tab 5 and the bulkhead separating the wheelhouse and such a locker should have fire integrity of at least "B-0" class.

e) Battery rooms containing Li Ion-type batteries are to be considered as a machinery space of category A for structural fire protection purpose. The boundaries between battery rooms containing Li Ion-type batteries and machinery spaces of category A are to have A-60 fire integrity.

Table 5 : Fire integrity of bulkheads separating adjacent spaces in cargo ships

SPACES		(1)	(2)	(3)	(4)	(5)	(6)	(7)	(8)	(9)	(10)	(11)
Control stations	(1)	A-0 [e]	A-0	A-60	A-0	A-15	A-60	A-15	A-60	A-60	*	A-60
Corridors	(2)		C	B-0	A-0 [c] B-0	B-0	A-60	A-0	A-0	A-0	*	A-30
Accommodation spaces	(3)			C [a,b]	A-0 [c] B-0	B-0	A-60	A-0	A-0	A-0	*	A-30
Stairways	(4)				A-0 [c] B-0	A-0 [c] B-0	A-60	A-0	A-0	A-0	* *	A-30
Service spaces (low risk)	(5)					C	A-60	A-0	A-0	A-0	*	A-0
Machinery spaces of category A	(6)						*	A-0	A-0 [g]	A-60	*	A-60 [f]
Other machinery spaces	(7)							A-0 [d]	A-0	A-0	*	A-0
Cargo spaces	(8)								*	A-0	*	A-0
Service spaces (high risk)	(9)									A-0 [d]	*	A-30
Open decks	(10)										–	A-0
Ro-ro and vehicle spaces	(11)											A-30

Note 1: (to be applied to Tab 5 and Tab 6, as appropriate)

[a] : No special requirements are imposed upon bulkheads in methods IIC and IIIC fire protection.

[b] : In case of method IIIC, B class bulkheads of B-0 rating are to be provided between spaces or groups of spaces of 50m² and over in area.

[c] : For clarification as to which applies, see [1.4.2] and [1.4.4].

[d] : Where spaces are of the same numerical category and letter "d" appears, a bulkhead or deck of the rating shown in the tables is only required when the adjacent spaces are for a different purpose, e.g. in category (9). A galley next to a galley does not require a bulkhead, but a galley next to a paint room requires an A-0 bulkhead.

[e] : Bulkheads separating the wheelhouse, chartroom and radio room from each other may have a B-0 rating.

[f] : An A-0 rating may be used if no dangerous goods are intended to be carried or if such goods are stowed not less than 3 m horizontally from such a bulkhead.

[g] : For cargo spaces in which dangerous goods are intended to be carried, Ch 4, Sec 12, [2.9] applies.

[h] : Fire insulation need not be fitted in the machinery space in category (7) if, in the opinion of the Society, it has little or no fire risk.

* : Where an asterisk appears in the tables, the division is required to be of steel or other equivalent material but is not required to be of A class standard. However where a deck, except an open deck, is penetrated for the passage of electric cables, pipes and vent ducts, such penetrations are to be made tight to prevent the passage of flame and smoke. Divisions between control stations (emergency generators) and open decks may have air intake openings without means for closure, unless a fixed gas fire-extinguishing system is fitted.

Table 6 : Fire integrity of decks separating adjacent spaces in cargo ships

SPACE below		SPACE above										
		(1)	(2)	(3)	(4)	(5)	(6)	(7)	(8)	(9)	(10)	(11)
Control stations	(1)	A-0	A-0	A-0	A-0	A-0	A-60	A-0	A-0	A-0	*	A-60
Corridors	(2)	A-0	*	*	A-0	*	A-60	A-0	A-0	A-0	*	A-30
Accommodation spaces	(3)	A-60	A-0	*	A-0	*	A-60	A-0	A-0	A-0	*	A-30
Stairways	(4)	A-0	A-0	A-0	*	A-0	A-60	A-0	A-0	A-0	*	A-30
Service spaces (low risk)	(5)	A-15	A-0	A-0	A-0	*	A-60	A-0	A-0	A-0	*	A-0
Machinery spaces of category A	(6)	A-60	A-60	A-60	A-60	A-60	*	A-60 [h]	A-30	A-60	*	A-60
Other machinery spaces	(7)	A-15	A-0	A-0	A-0	A-0	A-0	*	A-0	A-0	*	A-0
Cargo spaces	(8)	A-60	A-0	A-0	A-0	A-0	A-0	A-0	*	A-0	*	A-0
Service spaces (high risk)	(9)	A-60	A-0	A-0	A-0	A-0	A-60	A-0	A-0	A-0 [d]	*	A-30
Open decks	(10)	*	*	*	*	*	*	*	*	*	–	A-0
Ro-ro and vehicle spaces	(11)	A-60	A-30	A-30	A-30	A-0	A-60	A-0	A-0	A-30	A-0	A-30
Note 1: The notes to Tab 5 apply to this Table as appropriate.												

1.4.4 Protection of stairways and lift trunks in accommodation spaces, service spaces and control stations

a) *Stairways which penetrate only a single deck shall be protected, at a minimum, at one level by at least B-0 class divisions and self-closing doors. Lifts which penetrate only a single deck shall be surrounded by A-0 class divisions with steel doors at both levels. Stairways and lift trunks which penetrate more than a single deck shall be surrounded by at least A-0 class divisions and be protected by self-closing doors at all levels.*

   Dumb-waiters are to be regarded as lifts.

b) *On ships having accommodation for 12 persons or less, where stairways penetrate more than a single deck and where there are at least two escape routes direct to the open deck at every accommodation level, the A-0 requirements of item a) above may be reduced to B-0.*

1.5 Tankers

1.5.1 Application

For tankers, only method IC as defined in item a) of [1.4.1] shall be used.

1.5.2 Fire integrity of bulkheads and decks

a) *In lieu of the requirements of [1.4] and in addition to complying with the specific provisions for fire integrity of bulkheads and decks of tankers, the minimum fire integrity of bulkheads and decks shall be as prescribed in Tab 7 and Tab 8.*

b) *The following requirements shall govern application of Tab 7 and Tab 8:*

   1) *Tab 7 and Tab 8 shall apply respectively to the bulkheads and decks separating adjacent spaces.*

   2) *For determining the appropriate fire integrity standards to be applied to divisions between adjacent spaces, such spaces are classified according to their fire risk as shown in categories (1) to (10) below. Where the contents and use of a space are such that there is a doubt as to its classification for the purpose of the present Section, or where it is possible to assign two or more classifications to a space, it shall be treated as a space within the relevant category having the most stringent boundary requirements. Smaller, enclosed areas within a space that have less than 30 % communicating openings to that space are considered separate areas. The fire integrity of the boundary bulkheads and decks of such smaller spaces shall be as prescribed in Tab 7 and Tab 8. The title of each category is intended to be typical rather than restrictive. The number in parentheses preceding each category refers to the applicable column or row in the tables.*

   - *(1) Control stations*

     Spaces containing emergency sources of power and lighting

     Wheelhouse and chartroom

     Spaces containing the ship's radio equipment

     Fire control stations

     Control room for propulsion machinery when located outside the machinery space

     Spaces containing centralized fire alarm equipment.

   - *(2) Corridors*

     Corridors and lobbies.

   - *(3) Accommodation spaces*

     Spaces as defined in Ch 4, Sec 1, [2.2], excluding corridors.

- *(4) Stairways*

  Interior stairways, lifts, totally enclosed emergency escape trunks, and escalators (other than those wholly contained within the machinery spaces) and enclosures thereto

  In this connection a stairway which is enclosed only at one level shall be regarded as part of the space from which it is not separated by a fire door.
- *(5) Service spaces (low risk)*

  Lockers and store-rooms not having provisions for the storage of flammable liquids and having areas less than 4 m² and drying rooms and laundries

  Spaces where the storage of liquid or solid chemicals for ballast water management systems is intended if no flammable products are stored and if the area of the space is less than 4m²

Note 1: Only chemical injection (cat.6 as per Ch 1, Sec 13, Tab 1), in-line flocculation (cat.2 as per Ch 1, Sec 13, Tab 1) and technologies using neutralizer injection (cat.4, 5, 6 and 7 as per Ch 1, Sec 13, Tab 1) require chemical or additive storage.

- *(6) Machinery spaces of category A*

  Spaces as defined in Ch 4, Sec 1, [2.30]

  Ballast Water Management Rooms (BWMR) containing oil-fired inert gas generators (i.e. for ballast water management systems category 3b and 3c according to Ch 1, Sec 13, Tab 1).
- *(7) Other machinery spaces*

  Electrical equipment rooms (auto-telephone exchange and air-conditioning duct spaces)

  Spaces as defined in Ch 4, Sec 1, [2.29], excluding machinery spaces of category A.

  Spaces dedicated to urea or sodium hydroxide solution tanks for selective catalytic reduction (SCR) systems, exhaust gas recirculation (EGR) systems or exhaust gas cleaning systems (EGCS), when separated from the engine room.

  Ballast Water Management Rooms (BWMR) not containing oil-fired inert gas generators (i.e. for ballast water management systems other than category 3b and 3c according to Ch 1, Sec 13, Tab 1)

  Spaces intended for the storage or handling of solvent (as defined in Ch 1, Sec 12, [1.3.6]) on board ships fitted with an onboard carbon capture and storage system (OCC).
- *(8) Cargo pump-rooms*

  Spaces containing cargo pumps and entrances and trunks to such spaces

  Spaces where the storage of liquid or solid chemicals for ballast water management systems is intended, if located in the cargo area in accordance with Ch 1, Sec 13

Note 2: Only chemical injection (cat.6 as per Ch 1, Sec 13, Tab 1), in-line flocculation (cat.2 as per Ch 1, Sec 13, Tab 1) and technologies using neutralizer injection (cat.4, 5, 6 and 7 as per Ch 1, Sec 13, Tab 1 require chemical or additive storage.

Ballast Water Management Rooms (BWMR), if located in the cargo area in accordance with Ch 1, Sec 13

- *(9) Service spaces (high risk)*

  Galleys, pantries containing cooking appliances, saunas, paint lockers and store-rooms having areas of 4 m² or more, spaces for the storage of flammable liquids, and workshops other than those forming part of the machinery spaces.

  Spaces where the storage of liquid or solid chemicals for ballast water management systems is intended if flammable products are stored or if the area of the space is above 4 m².

Note 3: Note 3: Only chemical injection (cat.6 as per Ch 1, Sec 13, Tab 1), in-line flocculation (cat.2 as per Ch 1, Sec 13, Tab 1 and technologies using neutralizer injection (cat.4, 5, 6 and 7 as per Ch 1, Sec 13, Tab 1) require chemical or additive storage.

Spaces where oxygen is stored or produced.

- *(10) Open decks*

  Open deck spaces and enclosed promenades having little or no fire risk. To be considered in this category, enclosed promenades shall have no significant fire risk, meaning that furnishings shall be restricted to deck furniture. In addition, such spaces are to be naturally ventilated through permanent openings, having a combined area of at least 30% of the total area of the space boundaries adjacent to the outside.

  Air spaces (the space outside superstructures and deckhouses).

c) *Continuous B class ceilings or linings, in association with the relevant decks or bulkheads, may be accepted as contributing, wholly or in part, to the required insulation and integrity of a division.*

d) *External boundaries which are required in Ch 4, Sec 7, [2.1.1] to be of steel or other equivalent material may be pierced for the fitting of windows and sidescuttles provided that there is no requirement for such boundaries of tankers to have A class integrity. Similarly, in such boundaries which are not required to have A class integrity, doors may be constructed of materials which are to the satisfaction of the Society.*

e) *Exterior boundaries of superstructures and deckhouses enclosing accommodation and including any overhanging decks which support such accommodation shall be constructed of steel and insulated to A-60 standard for the whole of the portions which face the cargo area and on the outward sides for a distance of 3 m from the end boundary facing the cargo area. The distance of 3 m shall be measured horizontally and parallel to the middle line of the ship from the boundary which faces the cargo area at each deck level. In the case of the sides of those superstructures and deckhouses, such insulation shall be carried up to the underside of the deck of the navigation bridge.*

   Windows and side scuttles within these limits are to be of the fixed type and constructed to the A-60 standard.

f) Skylights to cargo pump-rooms shall be of steel, shall not contain any glass and shall be capable of being closed from outside the pump-room.

g) In approving structural fire protection details, the Society shall have regard to the risk of heat transmission at intersections and terminal points of required thermal barriers.

h) Saunas shall comply with [1.3.3], item e).

i) A navigation locker that can only be accessed from the wheelhouse should be considered as a control station with respect to the requirements in Tab 7 and the bulkhead separating the wheelhouse and such a locker should have fire integrity of at least "B-0" class.

j) Battery rooms containing Li Ion-type batteries are to be considered as a machinery space of category A for structural fire protection purpose. The boundaries between battery rooms containing Li Ion-type batteries and machinery spaces of category A are to have A-60 fire integrity.

Table 7 : Fire integrity of bulkheads separating adjacent spaces in tankers

SPACES		(1)	(2)	(3)	(4)	(5)	(6)	(7)	(8)	(9)	(10)
Control stations	(1)	A-0 [c]	A-0	A-60	A-0	A-15	A-60	A-15	A-60	A-60	*
Corridors	(2)		C	B-0	A-0 [a] B-0	B-0	A-60	A-0	A-60	A-0	*
Accommodation spaces	(3)			C	A-0 [a] B-0	B-0	A-60	A-0	A-60	A-0	*
Stairways	(4)				A-0 [a] B-0	A-0 [a] B-0	A-60	A-0	A-60	A-0	*
Service spaces (low risk)	(5)					C	A-60	A-0	A-60	A-0	*
Machinery spaces of category A	(6)						*	A-0	A-0 [d]	A-60	*
Other machinery spaces	(7)							A-0 [b]	A-0	A-0	*
Cargo pump-rooms	(8)								*	A-60	*
Service spaces (high risk)	(9)									A-0 [b]	*
Open decks	(10)										–

Note 1: (to be applied to Tab 7 and Tab 8, as appropriate)

[a] : For clarification as to which applies, see [1.4.2] and [1.4.4].

[b] : Where spaces are of the same numerical category and letter "b" appears, a bulkhead or deck of the rating shown in the tables is only required when the adjacent spaces are for a different purpose, e.g. in category (9). A galley next to a galley does not require a bulkhead, but a galley next to a paint room requires an A-0 bulkhead.

[c] : Bulkheads separating the wheelhouse, chartroom and radio room from each other may have a B-0 rating.

[d] : Bulkheads and decks between cargo pump-rooms and machinery spaces of category A may be penetrated by cargo pump shaft glands and similar gland penetrations, provided that gastight seals with efficient lubrication or other means of ensuring the permanence of the gas seal are fitted in way of the bulkheads or decks.

[e] : Fire insulation need not be fitted in the machinery space in category (7) if, in the opinion of the Society, it has little or no fire risk

* : Where an asterisk appears in the tables, the division is required to be of steel or other equivalent material, but is not required to be of A class standard. However, where a deck, except an open deck, is penetrated for the passage of electric cables, pipes and vent ducts, such penetrations are to be made tight to prevent the passage of flame and smoke. Divisions between control stations (emergency generators) and open decks may have air intake openings without means for closure, unless a fixed gas fire-extinguishing system is fitted.

Table 8 : Fire integrity of decks separating adjacent spaces in tankers

SPACE below		SPACE above									
		(1)	(2)	(3)	(4)	(5)	(6)	(7)	(8)	(9)	(10)
Control stations	(1)	A-0	A-0	A-0	A-0	A-0	A-60	A-0	–	A-0	*
Corridors	(2)	A-0	*	*	A-0	*	A-60	A-0	–	A-0	*
Accommodation spaces	(3)	A-60	A-0	*	A-0	*	A-60	A-0	–	A-0	*
Stairways	(4)	A-0	A-0	A-0	*	A-0	A-60	A-0	–	A-0	*
Service spaces (low risk)	(5)	A-15	A-0	A-0	A-0	*	A-60	A-0	–	A-0	*
Machinery spaces of category A	(6)	A-60	A-60	A-60	A-60	A-60	*	A-60 [e]	A-0	A-60	*
Other machinery spaces	(7)	A-15	A-0	A-0	A-0	A-0	A-0	*	A-0	A-0	*
Cargo pump-rooms	(8)	–	–	–	–	–	A-0 [d]	A-0	*	–	*
Service spaces (high risk)	(9)	A-60	A-0	A-0	A-0	A-0	A-60	A-0	–	A-0 [b]	*
Open decks	(10)	*	*	*	*	*	*	*	*	*	–

Note 1: The notes to Tab 7 apply to this Table as appropriate.

2 Penetrations in fire-resisting divisions and prevention of heat transmission

2.1 Penetrations in A class divisions

2.1.1 *Where A class divisions are penetrated, such penetration shall be tested in accordance with the Fire Test Procedures Code. In the case of ventilation ducts, requirements [6.2.3] and [6.4.1] apply. However, where a pipe penetration is made of steel or equivalent material having a thickness of 3 mm or greater and a length of not less than 900 mm (preferably 450 mm on each side of the division), and there are no openings, testing is not required. Such penetrations shall be suitably insulated by extension of the insulation at the same level of the division.*

2.2 Penetrations in B class divisions

2.2.1 *Where B class divisions are penetrated for the passage of electric cables, pipes, trunks, ducts, etc., of for the fitting of ventilation terminals, lighting fixtures and similar devices, arrangements shall be made to ensure that the fire resistance is not impaired, subject to the provisions of paragraph [6.4.2]. Pipes other that steel or copper that penetrate B class divisions shall be protected by either:*

- *a fire-tested penetration device suitable for the fire resistance of the division pierced and the type of pipe used, or*
- *a steel sleeve, having a thickness of not less than 1,8 mm and a length of not less than 900 mm for pipe diameters of 150 mm or more and not less than 600 mm for pipe diameters of less than 150 mm (preferably equally divided to each side of the division). The pipe shall be connected to the ends of the sleeve by flanges or couplings; or the clearance between the sleeve and the pipe shall not exceed 2,5 mm; or any clearance between pipe and sleeve shall be made tight by means of non-combustible or other suitable material.*

2.3 Pipes penetrating A or B class divisions

2.3.1 *Uninsulated metallic pipes penetrating A or B class divisions shall be of materials having a melting temperature which exceeds 950°C for A-0 and 850°C for B-0 class divisions.*

2.3.2 *Where the Society may permit the conveying of oil and combustible liquids through accommodation and service spaces, the pipes conveying oil or combustible liquids shall be of a material approved by the Society having regard to the fire risk.*

2.4 Prevention of heat transmission

2.4.1 *In approving structural fire protection details, the Administration shall have regard to the risk of heat transmission at intersections and terminal points of required thermal barriers. The insulation of a deck or bulkhead shall be carried past the penetration, intersection or terminal point for a distance of at least 450 mm in the case of steel and aluminium structures. If a space is divided with a deck or a bulkhead of A class standard having insulation of different values, the insulation with the higher value shall continue on the deck or bulkhead with the insulation of the lesser value for a distance of at least 450 mm.*

3 Protection of openings in fire-resisting divisions

3.1 Application

3.1.1 The provisions of [3.2] apply to passenger ships and those of [3.3] apply to cargo ships.

3.2 Openings in bulkheads and decks

3.2.1 Openings in A class divisions

a) *Except for hatches between cargo, special category, store and baggage spaces, and between such spaces and the weather decks, openings shall be provided with permanently attached means of closing which shall be at least as effective for resisting fires as the divisions in which they are fitted.*

b) *The construction of doors and door frames in A class divisions, with the means of securing them when closed, shall provide resistance to fire as well as to the passage of smoke and flame equivalent to that of the bulkheads in which the doors are situated, this being determined in accordance with the Fire Test Procedures Code. Such doors and door frames shall be constructed of steel or other equivalent material.*

   Doors approved without the sill being part of the frame shall be installed such that the gap under the door does not exceed 12 mm.

   A non-combustible sill shall be installed under the door such that floor coverings do not extend beneath the closed door.

c) *Watertight doors need not be insulated.*

d) *It shall be possible for each door to be opened and closed from each side of the bulkhead by one person only.*

e) Fire doors in main vertical zone bulkheads, galley boundaries and stairway enclosures other than power-operated watertight doors and those which are normally locked shall satisfy the following requirements:

1) the doors shall be self-closing and be capable of closing with an angle of inclination of up to 3,5° opposing closure

2) the approximate time of closure for hinged fire doors shall be no more than 40 s and no less than 10 s from the beginning of their movement with the ship in upright position. The approximate uniform rate of closure for sliding doors shall be of no more than 0,2 m/s and no less than 0,1 m/s with the ship in upright position

3) the doors, except those for emergency escape trunks, shall be capable of remote release from the continuously manned central control station, either simultaneously or in groups, and shall be capable of release also individually from a position at both sides of the door. Release switches shall have an on-off function to prevent automatic resetting of the system

4) hold-back hooks not subject to central control station release are prohibited

5) a door closed remotely from the central control station shall be capable of being re-opened from both sides of the door by local control. After such local opening, the door shall automatically close again

6) indication shall be provided at the fire door indicator panel in the continuously manned central control station whether each door is closed

7) the release mechanism shall be so designed that the door will automatically close in the event of disruption of the control system or central power supply

8) local power accumulators for power-operated doors shall be provided in the immediate vicinity of the doors to enable the doors to be operated at least ten times (fully opened and closed) after disruption of the control system or central power supply using the local controls

9) disruption of the control system or central power supply at one door shall not impair the safe functioning of the other doors

10) remote-released sliding or power-operated doors shall be equipped with an alarm that sounds at least 5 s but no more than 10 s, after the door is released from the central control station and before the door begins to move and continues sounding until the door is completely closed

11) a door designed to re-open upon contacting an object in its path shall re-open not more than 1 m from the point of contact

12) double-leaf doors equipped with a latch necessary for their fire integrity shall have a latch that is automatically activated by the operation of the doors when released by the system

13) doors giving direct access to special category spaces which are power-operated and automatically closed need not be equipped with the alarms and remote-release mechanisms required in items 3) and 10)

14) the components of the local control system shall be accessible for maintenance and adjusting

15) power-operated doors shall be provided with a control system of an approved type which shall be able to operate in case of fire and be in accordance with the Fire Test Procedures Code. This system shall satisfy the following requirements:

- *the control system shall be able to operate the door at the temperature of at least 200°C for at least 60 min, served by the power supply*
- *the power supply for all other doors not subject to fire shall not be impaired, and*
- *at temperatures exceeding 200°C, the control system shall be automatically isolated from the power supply and shall be capable of keeping the door closed up to at least 945°C.*

f) The requirements for A class integrity of the outer boundaries of a ship shall not apply to glass partitions, windows and sidescuttles, provided that there is no requirement for such boundaries to have A class integrity in item c) of [3.2.3]. The requirements for A class integrity of the outer boundaries of the ship shall not apply to exterior doors, except for those in superstructures and deckhouses facing life-saving appliances, embarkation and external assembly station areas, external stairs and open decks used for escape routes. Stairway enclosure doors need not meet this requirement.

g) Except for watertight doors, weathertight doors (semi-watertight doors), doors leading to the open deck and doors which need to be reasonably gas-tight, all A class doors located in stairways, public spaces and main vertical zone bulkheads in escape routes shall be equipped with a self-closing hose port. The material, construction and fire resistance of the hose port shall be equivalent to the door into which it is fitted, and shall be a 150 mm square clear opening with the door closed and shall be inset into the lower edge of the door, opposite the door hinges or, in the case of sliding doors, nearest the opening.

3.2.2 Openings in B class divisions

a) Doors and door frames in B class divisions and means of securing them shall provide a method of closure which shall have resistance to fire equivalent to that of the divisions, this being determined in accordance with the Fire Test Procedures Code, except that ventilation openings may be permitted in the lower portion of such doors. Where such opening is in or under a door, the total net area of any such opening or openings shall not exceed 0,05 m^2. Alternatively, a non-combustible air

balance duct routed between the cabin and the corridor, and located below the sanitary unit, is permitted where the cross-sectional area of the duct does not exceed 0,05 m². All ventilation openings shall be fitted with a grill made of non-combustible material. Doors shall be non-combustible.

Doors approved without the sill being part of the frame shall be installed such that the gap under the door does not exceed 25 mm.

b) Cabin doors in B class divisions shall be of a self-closing type. Hold-back hooks are not permitted.

c) The requirements for B class integrity of the outer boundaries of a ship shall not apply to glass partitions, windows and sidescuttles. Similarly, the requirements for B class integrity shall not apply to exterior doors in superstructures and deckhouses. For ships carrying not more than 36 passengers, the Society may permit the use of combustible materials in doors separating cabins from the individual interior sanitary spaces such as showers.

d) B15 doors for shops leading to corridors shall be self-closing and equipped with hold-back capable of remote release from the continuous manned central control station. Such remote release may be grouped with the release of the nearest remote controlled A class fire door. Individual release shall also be possible locally from a position in the corridor close to the door.

3.2.3 Windows and sidescuttles

a) Windows and sidescuttles in bulkheads within accommodation and service spaces and control stations other than those to which the provisions of item f) of [3.2.1] and item c) of [3.2.2] apply shall be so constructed as to preserve the integrity requirements of the type of bulkheads in which they are fitted, this being determined in accordance with the Fire Test Procedures Code.

b) Notwithstanding the requirements of Tab 1 to Tab 4, windows and sidescuttles in bulkheads separating accommodation and service spaces and control stations from weather shall be constructed with frames of steel or other suitable material. The glass shall be retained by a metal glazing bead or angle.

c) For ships carrying more than 36 passengers, windows facing survival craft, embarkation and assembly stations, external stairs and open decks used for escape routes, and windows situated below liferaft and escape slide embarkation areas shall have fire integrity as required in Tab 1. Where automatic dedicated sprinkler heads are provided for windows, A-0 windows may be accepted as equivalent. To be considered under this paragraph, the sprinkler heads must either be:

1) dedicated heads located above the windows, and installed in addition to the conventional ceiling sprinklers; or

2) conventional ceiling sprinkler heads arranged such that the window is protected by an average application rate of at least 5 l/min per square metre and the additional window area is included in the calculation of the area of coverage; or

3) approved water-mist nozzles; and

Windows located in the ship's side below the lifeboat embarkation area shall have fire integrity at least equal to A-0 class.

d) For ships carrying not more than 36 passengers, windows facing survival craft and escape slide, embarkation areas and windows situated below such areas shall have fire integrity at least equal to A-0 class.

3.3 Doors in fire-resisting divisions

3.3.1 *The fire resistance of doors shall be equivalent to that of the division in which they are fitted, this being determined in accordance with the Fire Test Procedures Code.*

Doors approved as A class without the sill being part of the frame shall be installed such that the gap under the door does not exceed 12 mm and a non-combustible sill shall be installed under the door such that floor coverings do not extend beneath the closed door. Doors approved as B class without the sill being part of the frame shall be installed such that the gap under the door does not exceed 25 mm.

Doors and door frames in A class divisions shall be constructed of steel. Doors in B class divisions shall be non-combustible. Doors fitted in boundary bulkheads of machinery spaces of category A shall be reasonably gas-tight and self-closing. In ships constructed according to method IC, the Society may permit the use of combustible materials in doors separating cabins from individual interior sanitary accommodation such as showers.

3.3.2 *Doors required to be self-closing shall not be fitted with hold-back hooks. However, hold-back arrangements fitted with remote release devices of the fail-safe type may be utilized.*

3.3.3 *In corridor bulkheads, ventilation openings may be permitted in and under the doors of cabins and public spaces. Ventilation openings are also permitted in B class doors leading to lavatories, offices, pantries, lockers and store-rooms. Except as permitted below, the openings shall be provided only in the lower half of a door. Where such an opening is in or under a door, the total net area of any such opening or openings shall not exceed 0,05 m². Alternatively, a non-combustible air balance duct routed between the cabin and the corridor, and located below the sanitary unit, is permitted where the cross-sectional area of the duct does not exceed 0,05 m². Ventilation openings, except those under the door, shall be fitted with a grill made of non-combustible material.*

3.3.4 *Watertight doors need not be insulated.*

4 Protection of openings in machinery space boundaries

4.1 Application

4.1.1 *The provisions of Article [4] shall apply to machinery spaces of category A and, where the Society considers it desirable, to other machinery spaces.*

The provisions of [4.2] apply to ships of all types, except those of [4.2.3] and [4.2.5] which apply to passenger ships.

4.2 Protection of openings in machinery space boundaries

4.2.1

a) The number of skylights, doors, ventilators, openings in funnels to permit exhaust ventilation and other openings to machinery spaces shall be reduced to a minimum consistent with the needs of ventilation and the proper and safe working of the ship.

b) Skylights shall be of steel and shall not contain glass panels.

4.2.2 *Means of control shall be provided for closing power-operated doors or actuating release mechanisms on doors other than power-operated watertight doors. The controls shall be located outside the space concerned, where they will not be cut off in the event of fire in the space they serve.*

4.2.3 *The means of control required in [4.2.2] shall be situated at one control position or grouped in as few positions as possible, to the satisfaction of the Society. Such positions shall have safe access from the open deck.*

4.2.4 *When access to any machinery space of category A is provided at a low level from an adjacent shaft tunnel, there shall be provided in the shaft tunnel, near the watertight door, a light steel fire-screen door operable from each side.*

4.2.5 *Doors, other than power-operated watertight doors, shall be so arranged that positive closure is assured in case of fire in the space by power-operated closing arrangements or by the provision of self-closing doors capable of closing against an inclination of 3,5° opposing closure, and having a fail-safe hold-back arrangement, provided with a remotely operated release device. Doors for emergency escape trunks need not be fitted with a fail-safe hold-back facility and a remotely operated release device.*

4.2.6 *Windows shall not be fitted in machinery space boundaries. However, this does not preclude the use of glass in control rooms within the machinery spaces.*

5 Protection of cargo space boundaries

5.1 Application

5.1.1 The provisions of [5.2] to [5.3] apply to passenger ships.

5.2 Passenger ships carrying more than 36 passengers

5.2.1 *The boundary bulkheads and decks of special category and ro-ro spaces shall be insulated to A-60 class standard. However, where a category (5), (9) or (10) space, as defined in [1.3.3], is on one side of the division, the standard may be reduced to A-0. Where fuel oil tanks are below a special category space, the integrity of the deck between such spaces may be reduced to A-0 standard.*

5.3 Indicators

5.3.1 *Indicators shall be provided on the navigation bridge which shall indicate when any fire door leading to or from the special category spaces is closed.*

6 Ventilation systems

6.1 Application

6.1.1 The provisions of [6.2]] to [6.4], [6.6], and [6.7] apply to ships of all types.

The provisions of [6.5] and [6.8] apply to passenger ships carrying more than 36 passengers.

6.2 General

6.2.1 *Ventilation ducts, including single and double wall ducts, shall be of steel or equivalent material except flexible bellows of short length not exceeding 600 mm used for connecting fans to the ducting in air-conditioning rooms. Unless expressly provided otherwise in [6.2.7], any other material used in the construction of ducts, including insulation, shall also be non-combustible.*

A ventilation duct made of material other than steel may be considered equivalent to a ventilation duct made of steel, provided the material is non-combustible and has passed a standard fire test in accordance with Annex 1: Part 3 of the Fire Test Procedures Code as non-load bearing structure for 30 minutes following the requirements for testing "B" class divisions.

6.2.2 *However, short ducts, not generally exceeding 2 m in length and with a free cross-sectional area not exceeding 0,02 m^2, need not be of steel or equivalent material, subject to the following conditions:*

a) the ducts shall be made of non-combustible material, which may be faced internally and externally with membranes having low flame-spread characteristics and, in each case, a calorific value not exceeding 45 MJ/m2 of their surface area for the thickness used;

b) the ducts are only used at the end of the ventilation device; and

c) the ducts are not situated less than 600 mm, measured along the duct, from an opening in an "A" or "B" class division, including continuous "B" class ceiling.

Note 1: The term free cross-sectional area means, even in the case of a pre-insulated duct, the area calculated on the basis of the inner dimensions of the duct itself and not the insulation.

6.2.3 *The following arrangements shall be tested in accordance with the Fire Test Procedures Code:*

a) fire dampers, including their relevant means of operation. However, the testing is not required for dampers located at the lower end of the duct in exhaust ducts for galley ranges, which must be of steel and capable of stopping the draught in the duct; and

b) duct penetrations through "A" class divisions. However, the test is not required where steel sleeves are directly joined to ventilation ducts by means of riveted or screwed connections or by welding.

6.2.4 *Fire dampers shall be easily accessible. Where they are placed behind ceilings or linings, these ceilings or linings shall be provided with an inspection hatch on which the identification number of the fire damper is marked. The fire damper identification number shall also be marked on any remote controls provided.*

6.2.5 *Ventilation ducts shall be provided with hatches for inspection and cleaning. The hatches shall be located near the fire dampers.*

6.2.6 *The main inlets and outlets of ventilation systems shall be capable of being closed from outside the spaces being ventilated. The means of closing shall be easily accessible as well as prominently and permanently marked and shall indicate the operating position of the closing device.*

6.2.7 *Combustible gaskets in flanged ventilation duct connections are not permitted within 600 mm of openings in "A" or "B" class divisions and in ducts required to be of "A" class construction.*

6.2.8 *Ventilation openings or air balance ducts between two enclosed spaces shall not be provided except as permitted by [3.2.2] and [3.3.3].*

6.3 Arrangement of ducts

6.3.1 *The ventilation systems for machinery spaces of category A, vehicle spaces, ro-ro spaces, galleys, special category spaces and cargo spaces shall, in general, be separated from each other and from the ventilation systems serving other spaces. However, the galley ventilation systems on cargo ships of less than 4,000 gross tonnage and in passenger ships carrying not more than 36 passengers need not be completely separated from other ventilation systems, but may be served by separate ducts from a ventilation unit serving other spaces. In such a case, an automatic fire damper shall be fitted in the galley ventilation duct near the ventilation unit.*

6.3.2 *Ducts provided for the ventilation of machinery spaces of category A, galleys, vehicle spaces, ro-ro spaces or special category spaces shall not pass through accommodation spaces, service spaces, or control stations unless they comply with [6.3.4].*

6.3.3 *Ducts provided for the ventilation of accommodation spaces, service spaces or control stations shall not pass through machinery spaces of category A, galleys, vehicle spaces, ro-ro spaces or special category spaces unless they comply with [6.3.4].*

6.3.4 *As permitted by [6.3.2] and [6.3.3] ducts shall be either:*

a)

1) *constructed of steel having a thickness of at least 3 mm for ducts with a free cross-sectional area of less than 0.075 m², at least 4 mm for ducts with a free cross-sectional area of between 0.075 m² and 0.45 m², and at least 5 mm for ducts with a free cross-sectional area of over 0.45 m²;*
2) *suitably supported and stiffened;*
3) *fitted with automatic fire dampers close to the boundaries penetrated; and*
4) *insulated to "A-60" class standard from the boundaries of the spaces they serve to a point at least 5 m beyond each fire damper; or*

b)

1) *constructed of steel in accordance with item a) 1) and item a) 2); and*
2) *insulated to "A-60" class standard throughout the spaces they pass through, except for ducts that pass through spaces of category (9) or (10) as defined in [1.3.3], item b).*

6.3.5 *For the purposes of [6.3.4], item a) 4) and [6.3.4], item b) 2), ducts shall be insulated over their entire cross-sectional external surface. Ducts that are outside but adjacent to the specified space, and share one or more surfaces with it, shall be considered to pass through the specified space, and shall be insulated over the surface they share with the space for a distance of 450 mm past the duct.*

6.3.6 *Where it is necessary that a ventilation duct passes through a main vertical zone division, an automatic fire damper shall be fitted adjacent to the division. The damper shall also be capable of being manually closed from each side of the division. The control location shall be readily accessible and be clearly and prominently marked. The duct between the division and the damper shall be constructed of steel in accordance with [6.3.4], item a) 1) and [6.3.4], item a) 2) and insulated to at least the same fire integrity as the division penetrated. The damper shall be fitted on at least one side of the division with a visible indicator showing the operating position of the damper.*

6.4 Details of fire dampers and duct penetrations

6.4.1 *Ducts passing through "A" class divisions shall meet the following requirements:*

a) *Where a thin plated duct with a free cross sectional area equal to, or less than, 0,02 m² passes through "A" class divisions, the opening shall be fitted with a steel sheet sleeve having a thickness of at least 3 mm and a length of at least 200 mm, divided preferably into 100 mm on each side of the bulkhead or, in the case of a deck, wholly laid on the lower side of the decks penetrated.*

b) *Where ventilation ducts with a free cross-sectional area exceeding 0,02 m², but not more than 0,075 m², pass through "A" class divisions, the openings shall be lined with steel sheet sleeves. The ducts and sleeves shall have a thickness of at least 3 mm and a length of at least 900 mm. When passing through bulkheads, this length shall be divided preferably into 450 mm on each side of the bulkhead. These ducts, or sleeves lining such ducts, shall be provided with fire insulation. The insulation shall have at least the same fire integrity as the division through which the duct passes.*

   The fire insulation required by the above paragraph is to be provided only to the part of the duct and/or sleeve that is on the same side of the division being fire insulated, and be extended for a minimum of 450 mm along the duct and/or sleeve.

   Equivalent penetration protection may be provided to the satisfaction of the Society, and

c) *Automatic fire dampers shall be fitted in all ducts with a free cross-sectional area exceeding 0,075 m² that pass through "A" class divisions. Each damper shall be fitted close to the division penetrated and the duct between the damper and the division penetrated shall be constructed of steel in accordance with* [6.3.4] *item a) 1) and* [6.3.4] *item a) 2). The fire damper shall operate automatically, but shall also be capable of being closed manually from both sides of the division. The damper shall be fitted with a visible indicator which shows the operating position of the damper. Fire dampers are not required, however, where ducts pass through spaces surrounded by "A" class divisions, without serving those spaces, provided those ducts have the same fire integrity as the divisions which they penetrate. A duct of cross-sectional area exceeding 0,075 m² shall not be divided into smaller ducts at the penetration of an "A" class division and then recombined into the original duct once through the division to avoid installing the damper required by this provision.*

d) Ducts or pipes with free sectional area of 0.075 m² or less need to be fitted with fire damper at their passage through Class "A" divisions in those cases indicated in [6.3.2] and [6.3.3]. The fire damper can be omitted if the duct is arranged in compliance with the requirements of [6.3.4], item b) 1) and item b) 2).

6.4.2 *Ventilation ducts with a free cross-sectional area exceeding 0,02 m² passing through "B" class bulkheads shall be lined with steel sheet sleeves of 900 mm in length, divided preferably into 450 mm on each side of the bulkheads unless the duct is of steel for this length.*

When a duct passing through a division is to be in accordance with [2.2.1] and the above paragraph, no clearance should be allowed between the duct and the division.

6.4.3 *All fire dampers shall be capable of manual operation. The dampers shall have a direct mechanical means of release or, alternatively, be closed by electrical, hydraulic, or pneumatic operation. All dampers shall be manually operable from both sides of the division. Automatic fire dampers, including those capable of remote operation, shall have a failsafe mechanism that will close the damper in a fire even upon loss of electrical power or hydraulic or pneumatic pressure loss. Remotely operated fire dampers shall be capable of being reopened manually at the damper.*

6.5 Ventilation systems for passenger ships carrying more than 36 passengers

6.5.1 *In addition to the requirements in [6.2], [6.3] and [6.4], the ventilation system of a passenger ship carrying more than 36 passengers shall also meet the following requirements.*

6.5.2 *In general, the ventilation fans shall be so arranged that the ducts reaching the various spaces remain within a main vertical zone.*

6.5.3 *Stairway enclosures shall be served by an independent ventilation fan and duct system (exhaust and supply) which shall not serve any other spaces in the ventilation systems.*

6.5.4 *A duct, irrespective of its cross-section, serving more than one 'tween-deck accommodation space, service space or control station, shall be fitted, near the penetration of each deck of such spaces, with an automatic smoke damper that shall also be capable of being closed manually from the protected deck above the damper. Where a fan serves more than one 'tween-deck space through separate ducts within a main vertical zone, each dedicated to a single 'tween-deck space, each duct shall be provided with a manually operated smoke damper fitted close to the fan.*

6.5.5 *Vertical ducts shall, if necessary, be insulated as required by Tab 1 and Tab 2. Ducts shall be insulated as required for decks between the space they serve and the space being considered, as applicable.*

6.6 Exhaust ducts from galley ranges

6.6.1 Requirements for passenger ships carrying more than 36 passengers

a) In addition to the requirements in [6.2], [6.3] and [6.4], exhaust ducts from galley ranges shall be constructed in accordance with [6.3.4], item b) 1) and [6.3.4], item b) 2). They shall also be fitted with:

1) a grease trap readily removable for cleaning unless an alternative approved grease removal system is fitted;

2) a fire damper located in the lower end of the duct at the junction between the duct and the galley range hood which is automatically and remotely operated and, in addition, a remotely operated fire damper located in the upper end of the duct close to the outlet of the duct;

3) a fixed means for extinguishing a fire within the duct;

4) remote-control arrangements for shutting off the exhaust fans and supply fans, for operating the fire dampers mentioned in item a) 2) and for operating the fire-extinguishing system, which shall be placed in a position outside the galley close to the entrance to the galley. Where a multi-branch system is installed, a remote means located with the above controls shall be provided to close all branches exhausting through the same main duct before an extinguishing medium is released into the system; and

5) suitably located hatches for inspection and cleaning, including one provided close to the exhaust fan and one fitted in the lower end where grease accumulates.

The requirements given in item a) 1) to item a) 5) apply to all exhaust ducts from galley ranges in which grease or fat is likely to accumulate from galley ranges.

b) Exhaust ducts from ranges for cooking equipment installed on open decks shall conform to item a), as applicable, when passing through accommodation spaces or spaces containing combustible materials.

6.6.2 Requirements for cargo ships and passenger ships carrying not more than 36 passengers

When passing through accommodation spaces or spaces containing combustible materials, the exhaust ducts from galley ranges shall be constructed in accordance with [6.3.4], item a) 1) and [6.3.4], item a) 2). Each exhaust duct shall be fitted with:

a) a grease trap readily removable for cleaning;

b) an automatically and remotely operated fire damper located in the lower end of the duct at the junction between the duct and the galley range hood and, in addition, a remotely operated fire damper in the upper end of the duct close to the outlet of the duct;

c) arrangements, operable from within the galley, for shutting off the exhaust and supply fans; and

d) fixed means for extinguishing a fire within the duct.

6.7 Ventilation rooms serving machinery spaces of category A containing internal combustion machinery

6.7.1 *Where a ventilation room serves only such an adjacent machinery space and there is no fire division between the ventilation room and the machinery space, the means for closing the ventilation duct or ducts serving the machinery space shall be located outside of the ventilation room and machinery space.*

6.7.2 *Where a ventilation room serves such a machinery space as well as other spaces and is separated from the machinery space by a "A-0" class division, including penetrations, the means for closing the ventilation duct or ducts for the machinery space can be located in the ventilation room.*

6.8 Ventilation systems for laundries in passenger ships carrying more than 36 passengers

6.8.1 *Exhaust ducts from laundries and drying rooms of category (13) spaces as defined in [1.3.3], item b) shall be fitted with:*

a) filters readily removable for cleaning purposes;

b) a fire damper located in the lower end of the duct which is automatically and remotely operated;

c) remote-control arrangements for shutting off the exhaust fans and supply fans from within the space and for operating the fire damper mentioned in item b); and

d) suitably located hatches for inspection and cleaning.

Section 6 Suppression of Fire: Fire Fighting

1 Water supply systems

1.1 General

1.1.1 *Ships shall be provided with fire pumps, fire mains, hydrants and hoses complying with the applicable requirements of this Section.*

1.2 Fire mains and hydrants

1.2.1 General

Materials readily rendered ineffective by heat shall not be used for fire mains and hydrants unless adequately protected. The pipes and hydrants shall be so placed that the fire hoses may be easily coupled to them. The arrangement of pipes and hydrants shall be such as to avoid the possibility of freezing. Suitable drainage provisions shall be provided for fire main piping. Isolation valves shall be installed for all open deck fire main branches used for purposes other than fire fighting. In ships where deck cargo may be carried, the positions of the hydrants shall be such that they are always readily accessible and the pipes shall be arranged as far as practicable to avoid risk of damage by such cargo.

1.2.2 Ready availability of water supply

The arrangements for the ready availability of water supply shall be:

a) in passenger ships:

1) of 1000 gross tonnage and upwards such that at least one effective jet of water is immediately available from any hydrant in an interior location and so as to ensure the continuation of the output of water by the automatic starting of one required fire pump,

2) of less than 1000 gross tonnage by automatic start of at least one fire pump or by remote starting from the navigation bridge of at least one fire pump. If the pump starts automatically or if the bottom valve cannot be opened from where the pump is remotely started, the bottom valve shall always be kept open, and

3) if fitted with periodically unattended machinery spaces, the Society shall determine provisions for fixed water fire-extinguishing arrangements for such spaces equivalent to those required for normally attended machinery spaces;

b) in cargo ships:

with a periodically unattended machinery space or when only one person is required on watch, there shall be immediate water delivery from the fire main system at a suitable pressure, either by remote starting of one of the main fire pumps with remote starting from the navigation bridge and fire control station, if any, or permanent pressurization of the fire main system by one of the main fire pumps, except that the Society may waive this requirement for cargo ships of less than 1600 gross tonnage if the fire pump starting arrangement in the machinery space is in an easily accessible position.

1.2.3 Diameter of fire mains

The diameter of the fire main and water service pipes shall be sufficient for the effective distribution of the maximum required discharge from two fire pumps operating simultaneously, except that in the case of cargo ships other than those included in [6.3], the diameter need only be sufficient for the discharge of 140 m^3/hour.

1.2.4 Isolating valves and relief valves

a) Isolating valves to separate the section of the fire main within the machinery space containing the main fire pump or pumps from the rest of the fire main shall be fitted in an easily accessible and tenable position outside the machinery spaces. The fire main shall be so arranged that when the isolating valves are shut all the hydrants on the ship, except those in the machinery space referred to above, can be supplied with water by another fire pump or an emergency fire pump. The emergency fire pump, its seawater inlet, and suction and delivery pipes and isolating valves shall be located outside the machinery space. If this arrangement cannot be made, the sea-chest may be fitted in the machinery space if the sea inlet *valve is remotely controlled from a position in the same compartment as the emergency fire pump and the suction pipe is as short as practicable. Short lengths of suction or discharge piping may penetrate the machinery space, provided they are enclosed in a substantial steel casing or are insulated to A-60 class standards. The pipes shall have substantial wall thickness, but in no case less than 11 mm, and shall be welded except for the flanged connection to the sea inlet valve.*

b) Any part of the fire main routed through a category A machinery space, except for short lengths of suction or discharge piping complying with item a), is to be fitted with isolating valves outside of the space. The arrangements of the fire mains are to allow for fire water from the fire pumps or emergency fire pump to reach all hydrants outside of the isolated space. Isolation requirements of item a) are not applicable to the piping from fire pumps located in spaces other than category A machinery spaces.

c) In cases where suction or discharge piping of emergency fire pumps penetrating machinery spaces are enclosed in a substantial steel casing, or are insulated to "A-60" class standards, it is not necessary to enclose or insulate "distance pieces", "sea inlet valves" and "sea-chests". The method for insulating pipes to "A-60" class standards is that they are to be covered/ protected in a practical manner by insulation material which is approved as a part of "A-60" class divisions in accordance with the IMO FTP Code. Where the sea inlet valve is in the machinery space, the valve is not to be a fail-close type. Where the sea inlet valve is in the machinery space and is not a fail-open type, measures are to be taken so that the valve can be opened in the event of fire, e.g. control piping, actuating devices and/or electric cables with fire resistant protection equivalent to "A- 60" class standards.

d) In cases where main fire pumps are provided in compartments outside machinery spaces and where the emergency fire pump suction or discharge piping penetrates such compartments, the above interpretation of item c) is to be applied to the piping.

e) *A valve shall be fitted to serve each fire hydrant so that any fire hose may be removed while the fire pumps are in operation.*

f) *Relief valves shall be provided in conjunction with fire pumps if the pumps are capable of developing a pressure exceeding the design pressure of the water service pipes, hydrants and hoses. These valves shall be so placed and adjusted as to prevent excessive pressure in any part of the fire main system.*

g) *In tankers, isolation valves shall be fitted in the fire main at the poop front in a protected position and on the tank deck at intervals of not more than 40 m to preserve the integrity of the fire main system in case of fire or explosion.*

1.2.5 Number and position of hydrants

a) *The number and position of hydrants shall be such that at least two jets of water not emanating from the same hydrant, one of which shall be from a single length of hose, may reach any part of the ship normally accessible to the passengers or crew while the ship is being navigated and any part of any cargo space when empty, any ro-ro space or any vehicle space, in which latter case the two jets shall reach any part of the space, each from a single length of hose. Furthermore, such hydrants shall be positioned near the accesses to the protected spaces.*

   At least two hydrants are to be provided in machinery spaces of category A.

b) *In addition to the requirements in item a) above, passenger ships shall comply with the following:*

   1) *in the accommodation, service and machinery spaces, the number and position of hydrants shall be such that the requirements of item a) above may be complied with when all watertight doors and all doors in main vertical zone bulkheads are closed, and*

   2) *where access is provided to a machinery space of category A at a low level from an adjacent shaft tunnel, two hydrants shall be provided external to, but near the entrance to, that machinery space. Where such access is provided from other spaces, in one of those spaces two hydrants shall be provided near the entrance to the machinery space of category A. Such provision need not be made where the tunnel or adjacent spaces are not part of the escape route.*

1.2.6 Pressure at hydrants

With the two pumps simultaneously delivering water through the nozzles specified in [1.4.3], with the quantity of water as specified in [1.2.3], through any adjacent hydrants, the following minimum pressures shall be maintained at all hydrants:

a) *for passenger ships:*

   - *4000 gross tonnage and upwards : 0,40 N/mm²*
   - *less than 4000 gross tonnage : 0,30 N/mm²*

b) *for cargo ships:*

   - *6000 gross tonnage and upwards : 0,27 N/mm²*
   - *less than 6000 gross tonnage : 0,25 N/mm²*

   and

c) *the maximum pressure at any hydrant shall not exceed that at which the effective control of a fire hose can be demonstrated.*

1.2.7 International shore connection

Ships of 500 gross tonnage and upwards shall be provided with at least one international shore connection complying with Ch 4, Sec 15. Facilities shall be available enabling such a connection to be used on either side of the ship.

1.3 Fire pumps

1.3.1 Pumps accepted as fire pumps

Sanitary, ballast, bilge or general service pumps may be accepted as fire pumps, provided that they are not normally used for pumping oil and that, if they are subject to occasional duty for the transfer or pumping of oil fuel, suitable change-over arrangements are fitted.

The emergency fire pump mentioned in [1.3.3] may also be used for other suitable purposes subject to approval by the Society in each case.

1.3.2 Number of fire pumps

Ships shall be provided with independently driven fire pumps as follows:

a) in passenger ships of:

- *4000 gross tonnage and upwards : at least 3*
- *less than 4000 gross tonnage : at least 2*

b) in cargo ships of:

- *1000 gross tonnage and upwards : at least 2*
- *less than 1000 gross tonnage : at least 2 power-driven pumps, one of which shall be independently driven.*

1.3.3 Arrangement of fire pumps and fire mains

a) Fire pumps

The arrangement of sea connections, fire pumps and their sources of power shall be as to ensure that:

1) in passenger ships of

- *1000 gross tonnage and upwards, in the event of a fire in any one compartment, all the fire pumps will not be put out of action*
- *less than 1000 gross tonnage, if a fire in any one compartment could put all the pumps out of action, there shall be an alternative means consisting of an emergency fire pump complying with Ch 4, Sec 15, [11.1.1] with its source of power and sea connection located outside the space where the main fire pumps or their sources of power are located.*

2) in cargo ships of 500 gross tonnage and upwards,

- unless the two main fire pumps and the fuel supply or source of power for each pump are situated within compartments separated at least by an A-0 class division, so that a fire in any one compartment will not render both fire pumps inoperable, a fixed independent power operated emergency fire pump complying with the following requirements and those of Ch 4, Sec 15, [11] is to be fitted (for cargo ships of less than 2000 gross tonnage only, Ch 4, Sec 15, [11.1.1] applies). An arrangement in which one main fire pump is located in a steel compartment having more than one bulkhead and/or deck adjacent to the compartment containing the other main fire pump will also require an emergency fire pump
- Where a power operated emergency fire pump is fitted, its fuel or power supply is to be so arranged that it will not readily be affected by a fire in the compartment containing the main fire pumps.

b) Requirements for the space containing the emergency fire pump in cargo ships

1) Location of the space

The space containing the fire pump shall not be contiguous to the boundaries of machinery spaces of category A or those spaces containing main fire pumps. Where this is not practicable, the common bulkhead between the two spaces shall be insulated to a standard of structural fire protection equivalent to that required for a control station in Ch 4, Sec 5, [1.4.3].

2) Access to the emergency fire pump

No direct access shall be permitted between the machinery space and the space containing the emergency fire pump and its source of power. When this is impracticable, the Society may accept an arrangement where the access is by means of an airlock with the door of the machinery space being of A-60 class standard and the other door being at least steel, both reasonably gastight, self-closing and without any hold-back arrangements. Alternatively, the access may be through a watertight door capable of being operated from a space remote from the machinery space and the space containing the emergency fire pump and unlikely to be cut off in the event of fire in those spaces. In such cases, a second means of access to the space containing the emergency fire pump and its source of power shall be provided.

When a single access to the emergency fire pump room is through another space adjoining a machinery space of category A or the spaces containing the main fire pumps, an A-60 class boundary is required between such other space and the machinery space of category A or the spaces containing the main fire pumps.

3) Ventilation of the emergency fire pump space

Ventilation arrangements to the space containing the independent source of power for the emergency fire pump shall be such as to preclude, as far as practicable, the possibility of smoke from a machinery space fire entering or being drawn into that space.

If the space is mechanically ventilated the power is to be supplied by the emergency source.

4) Illumination of the space

The room where the emergency fire pump prime mover is located is to be illuminated from the emergency source of supply and is to be well ventilated.

c) Additional pumps for cargo ships

In addition, in cargo ships where other pumps, such as general service, bilge and ballast, etc., are fitted in a machinery space, arrangements shall be made to ensure that at least one of these pumps, having the capacity and pressure required by [1.3.4] item b) and by [1.2.6] item b), is capable of providing water to the fire main.

1.3.4 Capacity of fire pumps

a) *Total capacity of required fire pumps*

The required fire pumps shall be capable of delivering for fire-fighting purposes a quantity of water, at the pressure specified in [1.2.6], as follows:

1) *pumps in passenger ships: the quantity of water is not less than two thirds of the quantity required to be dealt with by the bilge pumps when employed for bilge pumping, and*

2) *pumps in cargo ships, other than any emergency pump: the quantity of water is not less than four thirds of the quantity required in Ch 1, Sec 10 to be dealt with by each of the independent bilge pumps in a passenger ship of the same dimension when employed in bilge pumping, provided that in no cargo ship other than those included in [6.3], need the total required capacity of the fire pumps exceed 180 m³/hour.*

b) When the main water supply for other fixed fire-extinguishing systems is from the fire pumps, the total capacity of the fire pumps is to be sufficient for the simultaneous use of:

- the minimum required number of jets of water at the required pressure from the fire main, and
- other fixed fire-extinguishing systems primarily fed by the fire main at their required output, or likely combination thereof.

c) *Capacity of each fire pump*

Each of the required fire pumps (other than any emergency pump required in [1.3.3] a) for cargo ships) shall have a capacity not less than 80% of the total required capacity divided by the minimum number of required fire pumps, but in any case not less than 25 m³/hour, and each such pump shall in any event be capable of delivering at least the two required jets of water. These fire pumps shall be capable of supplying the fire main system under the required conditions. Where more pumps than the minimum of required pumps are installed, such additional pumps shall have a capacity of at least 25 m³/h and shall be capable of delivering at least the two jets of water required in [1.2.5] a).

d) Specific requirements for ships designed to carry five or more tiers of containers on or above the weather deck

- in cases where the mobile water monitors are supplied by separate pumps and piping system, the total capacity of the main fire pumps need not exceed 180 m³/h and the diameter of the fire main and water service pipes (hereinafter referred to "the pipework diameter") need only be sufficient for the discharge of 140 m³/h.
- in cases where the mobile water monitors are supplied by the main fire pumps; the total capacity of required main fire pumps and the pipework diameter shall be sufficient for simultaneously supplying both the required number of fire hoses and mobile water monitors. However, the total capacity shall not be less than the following, whichever is smaller:
  - four thirds of the capacity required under Ch 1, Sec 10, [6.7.4] for each bilge pump or group of bilge pump; or
  - 180m³/h
- in cases where the mobile water monitors and the "water-spray system" (fixed arrangement of spraying nozzles or flooding the cargo space with water) required by Ch 4, Sec 12, [2.2.3] are supplied by the main fire pumps, the total capacity of the main fire pumps and the pipework diameter need only be sufficient to supply whichever of the following is the greater:
  - the mobile water monitors and the four nozzles required by Ch 4, Sec 12, [2.2.2]; or
  - the four nozzles required by Ch 4, Sec 12, [2.2.2] and the water-spray system required by Ch 4, Sec 12, [2.2.3]

  The total capacity, however, is not to be less than specified in the above bullet point.

1.4 Fire hoses and nozzles

1.4.1 General specifications

a) *Fire hoses shall be of non-perishable material approved by the Society and shall be sufficient in length to project a jet of water to any of the spaces in which they may be required to be used. Each hose shall be provided with a nozzle and the necessary couplings. Hoses specified in this Chapter as "fire hoses" shall, together with any necessary fittings and tools, be kept ready for use in conspicuous positions near the water service hydrants or connections. Additionally, in interior locations in passenger ships carrying more than 36 passengers, fire hoses shall be connected to the hydrants at all times. Fire hoses shall have a length of at least 10 m, but not more than:*

- *15 m in machinery spaces*
- *20 m in other spaces and open decks, and*
- *25 m for open decks on ships with a maximum breadth in excess of 30 m.*

b) *Unless one hose and nozzle is provided for each hydrant in the ship, there shall be complete interchangeability of hose couplings and nozzles.*

1.4.2 Number and diameter of fire hoses

a) *Ships shall be provided with fire hoses, the number and diameter of which shall be to the satisfaction of the Society.*

b) *In passenger ships, there shall be at least one fire hose for each of the hydrants required by [1.2.5] and these hoses shall be used only for the purposes of extinguishing fires or testing the fire-extinguishing apparatus at fire drills and surveys.*

c) *In cargo ships:*

1) *of 1000 gross tonnage and upwards, the number of fire hoses to be provided shall be one for each 30 m length of the ship and one spare, but in no case less than five in all. This number does not include any hoses required in any engine-room or boiler room. The Society may increase the number of hoses required so as to ensure that hoses in sufficient number are available and accessible at all times, having regard to the type of ship and the nature of trade in which the ship is employed. Ships carrying dangerous goods in accordance with Ch 4, Sec 12 shall be provided with three hoses and nozzles, in addition to those required above.*

   Hydrants in machinery spaces of category A shall be provided with fire hoses*, and*

2) *of less than 1000 gross tonnage, the number of fire hoses to be provided shall be calculated in accordance with the provisions of item 1) above. However the number of hoses shall in no case be less than three.*

1.4.3 Size and type of nozzles

a) *For the purposes of this Chapter, standard nozzle sizes shall be 12 mm, 16 mm and 19 mm or as near thereto as possible. Larger diameter nozzles may be permitted at the discretion of the Society.*

b) *For accommodation and service spaces, a nozzle size greater than 12 mm need not be used.*

c) *For machinery spaces and exterior locations, the nozzle size shall be such as to obtain the maximum discharge possible from two jets at the pressure mentioned in [1.2.6] from the smallest pump, provided that a nozzle size greater than 19 mm need not be used.*

d) *Nozzles shall be of an approved dual-purpose type (i.e. spray/jet type) incorporating a shut-off.*

2 Portable fire extinguishers

2.1 Type and design

2.1.1 *Portable fire extinguishers shall comply with the requirements of Ch 4, Sec 15.*

2.2 Arrangement of fire extinguishers

2.2.1 *Accommodation spaces, service spaces and control stations shall be provided with portable fire extinguishers of appropriate types and in sufficient number to the satisfaction of the Society. Ships of 1000 gross tonnage and upwards shall carry at least five portable fire extinguishers.*

The number and the type of portable fire extinguishers required for the above-mentioned spaces are to be as follows:

- in accommodation and service spaces of passenger ships: one foam extinguisher or equivalent, for each group of adjacent spaces with easy access between them having total deck area not exceeding 200 m^2
- in accommodation spaces of cargo ships of 1000 gross tonnage and upwards: at least five foam extinguishers or equivalent, but not less than one for each 'tweendeck
- in accommodation spaces of cargo ships of less than 1000 gross tonnage: at least two foam extinguishers or equivalent, but not less than one for each 'tweendeck
- in the proximity of any electric switchboard or section board having a power of 20 kW and upwards: at least one CO_2 or powder extinguisher
- in any service space where deep fat cooking equipment is installed: at least one foam extinguisher or equivalent
- in the proximity of any paint or flammable product locker: at least one foam extinguisher or equivalent
- on the navigation bridge: one CO_2 extinguisher or equivalent.

2.2.2 *One of the portable fire extinguishers intended for use in any space shall be stowed near the entrance to that space.*

3 Fixed fire-extinguishing systems

3.1 Types of fixed fire-extinguishing systems

3.1.1 *A fixed fire extinguishing system required by article [4] may be any of the following systems:*

a) *a fixed gas fire-extinguishing system complying with the provisions of Ch 4, Sec 15*

b) *a fixed high-expansion foam fire-extinguishing system complying with the provisions of Ch 4, Sec 15, and*

c) *a fixed pressure water spraying fire-extinguishing system complying with the provisions of Ch 4, Sec 15.*

3.1.2 *Where a fixed fire-extinguishing system not required by this Chapter is installed, it shall meet* the relevant requirements of this Chapter.

3.1.3 *Fire-extinguishing systems using Halon 1211, 1301, and 2402 and perfluorocarbons shall be prohibited.*

3.1.4 *In general, the Society shall not permit the use of steam as a fire-extinguishing medium in fixed fire-extinguishing systems.*

3.2 Closing appliances for fixed gas fire-extinguishing systems

3.2.1 *Where a fixed gas fire-extinguishing system is used, openings which may admit air to, or allow gas to escape from, a protected space shall be capable of being closed from outside the protected space.*

3.3 Storage rooms of fire-extinguishing medium

3.3.1 *When the fire-extinguishing medium is stored outside a protected space, it shall be stored in a room which is located behind the forward collision bulkhead, and is used for no other purposes. Any entrance to such a storage room shall preferably be from the open deck and shall be independent of the protected space. If the storage space is located below deck, it shall be located no more than one deck below the open deck and shall be directly accessible by a stairway or ladder from the open deck. Spaces which are located below deck or spaces where access from the open deck is not provided shall be fitted with a mechanical ventilation system designed to take exhaust air from the bottom of the space and shall be sized to provide at least 6 air changes per hour. Access doors shall open outwards, and bulkheads and decks, including doors and other means of closing any opening therein, which form the boundaries between such rooms and adjacent enclosed spaces, shall be gastight. For the purpose of the application of Ch 4, Sec 5, Tab 1 to Ch 4, Sec 5, Tab 8, such storage rooms shall be treated as fire control stations.*

3.4 Water pumps for other fire-extinguishing systems

3.4.1 *Pumps, other than those serving the fire main, required for the provision of water for fire-extinguishing systems required by the present Chapter, their sources of power and their controls shall be installed outside the space or spaces protected by such systems and shall be so arranged that a fire in the space or spaces protected will not put any such system out of action.*

4 Fire-extinguishing arrangements in machinery spaces

4.1 Machinery spaces arrangement

4.1.1 General

a) The arrangement of machinery spaces is to be such that safe storage and handling of flammable liquids is ensured.

b) All spaces where oil-consuming installations, settling tanks or daily service fuel tanks are located are to be easily accessible and well ventilated.

c) Where leakage of flammable liquids may occur during normal service or routine maintenance work, special arrangement is to be made to prevent these fluids from reaching other parts of the machinery where danger of ignition may arise.

d) Materials used in machinery spaces are not normally to have properties increasing the fire potential of these rooms. Neither combustible nor oil-absorbing materials are to be used as flooring, bulkhead lining, ceiling or deck in the control room, machinery spaces, shaft tunnel or rooms where oil tanks are located. Where penetration of oil products is possible, the surface of the insulation is to be impervious to oil or oil vapours.

4.1.2 Fuel oil purifiers and other systems for preparing flammable liquids

a) The provisions of the present requirement apply to the following systems:
   - systems (such as purifiers) for preparing flammable liquids for use in boilers and machinery
   - separate oil systems with working pressure above 1,5 MPa and which are not part of the main engines, auxiliary engines or boilers, etc.

b) In general, the main components of the systems are to be placed in a separate room, enclosed by steel bulkheads extending from deck to deck, provided with self-closing steel doors, and complying with the provisions of item c). Alternative arrangements complying with the provisions of item d) may be accepted.

   Transfer pumps may be placed outside this room.

   Lubricating oil systems part of the main machinery may be located in the main engine room in a location ventilated by extraction.

c) Where provided, rooms in which flammable liquids are handled are to be provided with:
   - independent mechanical ventilation or ventilation arrangements which can be isolated from the machinery space ventilation
   - a fire detecting system
   - a fixed fire-extinguishing installation. The fire-extinguishing installation is to be capable of being activated from outside the room. The fire-extinguishing system is to be separated for the room, but may be a part of the main fire-extinguishing system for the machinery space. Closing of ventilation openings is to be effected from a position close to where the extinguishing system is activated.

d) As an alternative to placing the main components of the systems in a separate room, specific measures with regard to the location, containment of possible leakages and shielding of the components and to ventilation may be submitted to the Society, such as:
   - fitting of drip trays and shielding for leakage containment
   - exhaust ventilation ducts inlets located close to the system so as to avoid flammable gas accumulation in the vicinity
   - exhaust ducts covering the system separate from the rest of the machinery space, and which may be served by common ventilation exhaust fans.

   A local fixed fire-extinguishing system as required by [4.7] is to be provided, capable of being activated automatically or activated manually from the machinery control position or from another suitable location. If automatic release is provided, additional manual release is to be arranged.

4.2 Machinery spaces containing oil-fired boilers or oil fuel units

4.2.1 Fixed fire-extinguishing systems

Machinery spaces of category A containing oil fired boilers or oil fuel units shall be provided with any one of the fixed fire-extinguishing systems in [3.1].

In each case, if the engine-room and boiler room are not entirely separate, or if fuel oil can drain from the boiler room into the engine-room, the combined engine and boiler rooms shall be considered as one compartment.

4.2.2 Additional fire-extinguishing arrangements

a) There shall be in each boiler room or at an entrance outside of the boiler room at least one portable foam applicator unit complying with the provisions of Ch 4, Sec 15.

b) There shall be at least two portable foam extinguishers or equivalent in each firing space in each boiler room and in each space in which a part of the oil fuel installation is situated. There shall be not less than one approved foam-type extinguisher of at least 135 l capacity or equivalent in each boiler room. These extinguishers shall be provided with hoses on reels suitable for reaching any part of the boiler room. In the case of domestic boilers of less than 175 kW, or boilers protected by fixed water-based local application fire-extinguishing systems as required by [4.7], an approved foam-type extinguisher of at least 135 l capacity is not required.

   In the proximity of any electric switchboard or section board having a power of 20 kW and upwards at least one CO_2 or powder extinguisher is to be fitted.

c) In each firing space there shall be a receptacle containing at least 0,1 m³ sand, sawdust impregnated with soda, or other approved dry material, along with a suitable shovel for spreading the material. An approved portable extinguisher may be substituted as an alternative.

4.3 Machinery spaces of category A containing internal combustion machinery

4.3.1 Fixed fire-extinguishing systems

Machinery spaces of category A containing internal combustion machinery shall be provided with one of the fixed fire-extinguishing systems required in [3.1].

4.3.2 Additional fire-extinguishing arrangements

a) There shall be at least one portable foam applicator unit complying with the provisions of Ch 4, Sec 15.

b) There shall be in each such space approved foam-type fire extinguishers, each of at least 45 l capacity or equivalent, sufficient in number to enable foam or its equivalent to be directed onto any part of the fuel and lubricating oil pressure systems, gearing and other fire hazards. In addition, there shall be provided a sufficient number of portable foam extinguishers or equivalent which shall be so located that no point in the space is more than 10 m walking distance from an extinguisher and that there are at least two such extinguishers in each such space. For smaller spaces of cargo ships, the Society may consider relaxing this requirement.

c) In the case of machinery spaces containing both boilers and internal combustion engines, [4.2] and [4.3] apply, with the exception that one of the foam fire extinguishers of at least 45 l capacity or equivalent may be omitted provided that the 136 l extinguisher can efficiently and readily protect the area covered by the 45 l extinguishers.

d) There shall be at least one CO_2 or powder extinguisher in the proximity of any electric switchboard or section board having a power of 20 kW and upwards.

4.4 Machinery spaces containing steam turbines or enclosed steam engines

4.4.1 Fixed fire-extinguishing systems

In spaces containing steam turbines or enclosed steam engines used for main propulsion or other purposes having in the aggregate a total output of not less than 375 kW, one of the fire-extinguishing systems specified in [3.1] shall be provided if such spaces are periodically unattended.

4.4.2 Additional fire-extinguishing arrangements

a) *There shall be approved foam fire extinguishers, each of at least 45 l capacity or equivalent, sufficient in number to enable foam or its equivalent to be directed on to any part of the pressure lubrication system, on to any part of the casings enclosing pressure-lubricated parts of the turbines, engines or associated gearing, and any other fire hazards. However, such extinguishers shall not be required if protection, at least equivalent to that required by this item, is provided in such spaces by a fixed fire-extinguishing system fitted in compliance with [3.1].*

b) *There shall be a sufficient number of portable foam extinguishers or equivalent which shall be so located that no point in the space is more than 10 m walking distance from an extinguisher and that there are at least two such extinguishers in each such space, except that such extinguishers shall not be required in addition to any provided in compliance with item b) of [4.2.2].*

c) There shall be at least one CO_2 or powder extinguisher in the proximity of any electric switchboard or section board having a power of 20 kW and upwards.

4.5 Other machinery spaces

4.5.1 *Where, in the opinion of the Society, a fire hazard exists in any machinery space for which no specific provisions for fire-extinguishing appliances are prescribed in [4.2], [4.3] and [4.4], there shall be provided in, or adjacent to, that space such a number of approved portable fire extinguishers or other means of fire extinction as the Society may deem sufficient.*

4.5.2 Spaces intended for the storage or handling of solvent onboard ships fitted with an onboard carbon capture and storage system (OCC)

Spaces intended for the storage or handling of solvent (as defined in Ch 1, Sec 12, [1.3.6]) on board ships fitted with an OCC are to be provided with one of the following fixed fire-extinguishing system:

- a fixed high-expansion foam fire-extinguishing system complying with the provisions of Ch 4, Sec 15 and using a foam concentrate suitable for extinguishing amine-based solvent fires, or
- a fixed pressure water spraying fire-extinguishing system complying with the provisions of Ch 4, Sec 15.

4.6 Additional requirements for passenger ships

4.6.1 *In passenger ships carrying more than 36 passengers, each machinery space of category A shall be provided with at least two suitable water fog applicators*, complying with Ch 4, Sec 15.

4.7 Fixed local application fire-extinguishing systems

4.7.1 *The present sub-article shall apply to passenger ships of 500 gross tonnage and above and cargo ships of 2000 gross tonnage and above.*

4.7.2 *Machinery spaces of category A above 500 m³ in volume shall, in addition to the fixed fire-extinguishing system required in [4.2.1], be protected by* a fixed water-based or equivalent local application fire-extinguishing system complying with the provisions of Ch 4, Sec 15. *In the case of periodically unattended machinery spaces, the fire-extinguishing system shall have both automatic and manual release capabilities. In the case of continuously manned machinery spaces, the fire-extinguishing system is only required to have a manual release capability.*

4.7.3 *Fixed local application fire-extinguishing systems are to protect areas such as the following without the necessity of engine shutdown, personnel evacuation, or sealing of the spaces:*

a) *the fire hazard portions of internal combustion machinery*. In multi-engine installations, at least two sections are to be arranged.

b) *boiler fronts*

c) *the fire hazard portions of incinerators, and*

d) *purifiers for heated fuel oil.*

4.7.4 *Activation of any local application system shall give a visual and distinct audible alarm in the protected space and at continuously manned stations. The alarm shall indicate the specific system activated. The system alarm requirements described within this requirement are in addition to, and not a substitute for, the detection and fire alarm system required elsewhere in this Chapter.*

5 Fire-extinguishing arrangements in control stations, accommodation and service spaces

5.1 Sprinkler and water-spray systems in passenger ships

5.1.1 *Passenger ships carrying more than 36 passengers shall be equipped with an automatic sprinkler, fire detection and fire alarm system of an approved type complying with the requirements of Ch 4, Sec 15 in all control stations, accommodation and service spaces, including corridors and stairways. Alternatively, control stations, where water may cause damage to essential equipment, may be fitted with an approved fixed fire-extinguishing system of another type. Spaces having little or no fire risk such as voids, public toilets, carbon dioxide rooms and similar spaces need not be fitted with an automatic sprinkler system.*

5.1.2 *In passenger ships carrying not more than 36 passengers, when a fixed smoke detection and fire alarm system complying with the provisions of Ch 4, Sec 15 is provided only in corridors, stairways and escape routes within accommodation spaces, an automatic sprinkler system shall be installed in accordance with Ch 4, Sec 3, [4.4.1], item b).*

5.1.3 *A fixed pressure water spraying fire-extinguishing system complying with the provisions of Ch 4, Sec 15, [6.1.3] shall be installed on cabin balconies to which Ch 4, Sec 2, [2.2.4] applies, when furniture and furnishings on such balconies are not as defined in Ch 4, Sec 1, [2.39.1], items a), b), c), f) and g).*

5.2 Sprinkler systems for cargo ships

5.2.1 *In cargo ships in which method IIC specified in a)2) of Ch 4, Sec 5, [1.4.1] is adopted, an automatic sprinkler, fire detection and fire alarm system shall be fitted in accordance with the requirements of Ch 4, Sec 3, [4.7.1], item b).*

5.3 Spaces containing flammable liquid

5.3.1 *Paint lockers shall be protected by:*

a) a carbon dioxide system, designed to give a minimum volume of free gas equal to 40% of the gross volume of the protected space

b) a dry powder system, designed for at least 0,5 kg powder/m^3

c) a water spraying or sprinkler system, designed for 5 l/m^2 min. water spraying systems may be connected to the fire main of the ship, or

d) a system providing equivalent protection, as determined by the Society.

In all cases, the system shall be operable from outside the protected space.

5.3.2 *Flammable liquid lockers shall be protected by an appropriate fire-extinguishing arrangement approved by the Society.*

5.3.3 *For lockers of a deck area of less than 4 m^2, which do not give access to accommodation spaces, a portable carbon dioxide fire extinguisher sized to provide a minimum volume of free gas equal to 40% of the gross volume of the space may be accepted in lieu of a fixed system. A discharge port shall be arranged in the locker to allow the discharge of the extinguisher without having to enter into the protected space. The required portable fire extinguisher shall be stowed adjacent to the port. Alternatively, a port or hose connection may be provided to facilitate the use of fire main water.*

5.4 Deep-fat cooking equipment

5.4.1 *Deep-fat cooking equipment installed in enclosed spaces or on open decks shall be fitted with the following:*

a) an automatic or manual fire-extinguishing system tested to an international standard

b) a primary and backup thermostat with an alarm to alert the operator in the event of failure of either thermostat

c) arrangements for automatically shutting off the electrical power upon activation of the fire-extinguishing system

d) an alarm for indicating operation of the fire-extinguishing system in the galley where the equipment is installed, and

e) controls for manual operation of the fire-extinguishing system which are clearly labelled for ready use by the crew.

6 Fire-extinguishing arrangements in cargo spaces

6.1 Fixed gas fire-extinguishing systems for general cargo

6.1.1 *Except as provided for in [6.2], the cargo spaces of passenger ships of 1000 gross tonnage and upwards shall be protected by a fixed carbon dioxide or inert gas fire-extinguishing system complying with the provisions of Ch 4, Sec 15 or by a fixed high-expansion foam fire-extinguishing system which gives equivalent protection.*

6.1.2 *Where it is shown to the satisfaction of the Society that a passenger ship is engaged on voyages of such short duration that it would be unreasonable to apply the requirements of [6.1.1] and also in ships of less than 1000 gross tonnage, the arrangements in cargo spaces shall be to the satisfaction of the Society, provided that the ship is fitted with steel hatch covers and effective means of closing all ventilators and other openings leading to the cargo spaces.*

6.1.3 *Except for ro-ro and vehicle spaces* (see Ch 4, Sec 13)*, cargo spaces on cargo ships of 2000 gross tonnage and upwards shall be protected by a fixed carbon dioxide or inert gas fire-extinguishing system complying with the provisions of Ch 4, Sec 15, or by a fire-extinguishing system which gives equivalent protection.*

6.1.4 *The Society may exempt from the requirements of [6.1.3] and [6.2] cargo spaces of any cargo ship if constructed, and solely intended, for the carriage of ore, coal, grain, unseasoned timber, non-combustible cargoes or cargoes which, in the opinion of the Society, constitute a low fire risk. Such exemptions may be granted only if the ship is fitted with steel hatch covers and effective means of closing all ventilators and other openings leading to the cargo spaces. When such exemptions are granted*, this will be reported on the Certificate of Classification.

Note 1: The list of solid bulk cargoes for which a fixed gas fire-extinguishing system may be exempted is given in the IMO Circular MSC.Circ.1395, as amended.

6.2 Fixed gas fire-extinguishing systems for dangerous goods

6.2.1 *A ship engaged in the carriage of dangerous goods* on deck or *in any cargo spaces shall be provided with a fixed carbon dioxide or inert gas fire-extinguishing system complying with the provisions of Ch 4, Sec 15 or with a fire-extinguishing system which, in the opinion of the Society, gives equivalent protection for the cargoes carried.*

6.3 Firefighting for ships designed to carry containers on or above the weather deck

6.3.1 *Ships shall carry, in addition to the equipment and arrangements required by article [1], at least one water mist lance.*

The water mist lance shall consist of a tube with a piercing nozzle which is capable of penetrating a container wall and producing water mist inside a confined space (container, etc.) when connected to the fire main.

6.3.2 *Ships designed to carry five or more tiers of containers on or above the weather deck shall carry, in addition to the requirements of [6.3.1], mobile water monitors as follows, and comply with item a) to e):*

- *ships with breadth less than 30 m: at least two mobile water monitors; or*
- *ships with breadth of 30 m or more: at least four mobile water monitors.*

a) The mobile water monitors, all necessary hoses, fittings and required fixing hardware shall be kept ready for use in a location outside the cargo space area not likely to be cut-off in the event of a fire in the cargo spaces.

b) A sufficient number of fire hydrants shall be provided such that:

1) all provided mobile water monitors can be operated simultaneously for creating effective water barriers forward and aft of each container bay;

2) the two jets of water required by item a) of [1.2.5] can be supplied at the pressure required by [1.2.6]; and

3) each of the required mobile water monitors can be supplied by separate hydrants at the pressure necessary to reach the top tier of containers on deck.

c) The mobile water monitors may be supplied by the fire main, provided the capacity of fire pumps and fire main diameter are adequate to simultaneously operate the mobile water monitors and two jets of water from fire hoses at the required pressure values. If carrying dangerous goods, the capacity of fire pumps and fire main diameter shall also comply with Ch 4, Sec 12, [2.2.5], as far as applicable to on-deck cargo areas.

d) The operational performance of each mobile water monitor shall be tested during initial survey on board the ship to the satisfaction of the Society. The test shall verify that:

1) the mobile water monitor can be securely fixed to the ship structure ensuring safe and effective operation; and

2) the mobile water monitor jet reaches the top tier of containers with all required monitors and water jets from fire hoses operated simultaneously.

e) The mobile water monitors are to be of a type approved by the Society according to IMO Circular MSC.1/Circ.1472.

7 Fire-extinguishing arrangements for ballast water management rooms

7.1 Fixed fire-extinguishing system

7.1.1 Where fitted, fixed fire-extinguishing systems are to comply with the relevant provisions of Ch 4, Sec 15.

7.1.2 Ozone-based ballast water management systems

Ballast water management rooms containing equipment related to ozone-based ballast water management systems are to be provided with a fixed fire-extinguishing system suitable for category A machinery spaces and capable of manual release.

7.1.3 Where a fixed fire-extinguishing system is provided in the ballast water management room, it is to be compatible with the ballast water management system and the chemical products that are used, produced or stored in the ballast water management room. Specific attention is to be paid to potential chemical reactions between the fire-extinguishing medium and chemical products used for water treatment.

Especially, water-based fire-extinguishing systems are to be avoided in case of sulfuric acid storage.

7.1.4 Foam fixed fire-extinguishing system

For all kinds of ballast water management systems, in case a foam fire-extinguishing system is installed in the ballast water management room, its efficiency is not to be impaired by chemicals used by the ballast water management system where relevant.

7.1.5 Where a fixed fire-extinguishing system is installed in the ballast water management room, automatic shutdown of the ballast water management system upon release of the fixed fire-extinguishing system is to be arranged. Any need for cooldown necessary for safe shutdown is to be considered in the shutdown sequence.

7.1.6 Where a ballast water management system that includes air or O_2 storage is located in a room covered by a fixed gas fire-extinguishing system, air or O_2 storage is to be taken into account for the gas capacity calculation, unless the discharge pipe from safety valves for air or O_2 storage are led directly to outside the room.

7.2 Portable fire-fighting equipment

7.2.1 At least one portable fire extinguisher complying with the provisions of Ch 4, Sec 15, [3] and suitable for electrical fires is to be provided in the ballast water management room containing UV-type ballast water management system.

8 Fire-extinguishing arrangements for battery rooms

8.1 Li Ion-type batteries above 20kWh

8.1.1 A fixed fire-extinguishing system is to be installed according to [3.1]. This system is to be compatible with the technology of the battery employed, according to the battery manufacturer specification.

Section 7 Suppression of Fire: Structural Integrity

1 Application

1.1 General

1.1.1 The provisions of Articles [2] to [5] apply to ships of all types and those of Article [6] apply to tankers.

2 Material of hull, superstructures, structural bulkheads, decks and deckhouses

2.1 General

2.1.1 *The hull, superstructures, structural bulkheads, decks and deckhouses shall be constructed of steel or other equivalent material. For the purpose of applying the definition of steel or other equivalent material as given in Ch 4, Sec 1, [2.49.1], the "applicable fire exposure" shall be according to the integrity and insulation standards given in Ch 4, Sec 5, Tab 1 to Ch 4, Sec 5, Tab 4. For example, where divisions such as decks or sides and ends of deckhouses are permitted to have B-0 fire integrity, the "applicable fire exposure" shall be half an hour.*

3 Structure of aluminium alloy

3.1 General

3.1.1 *Unless otherwise specified in [2.1.1], in cases where any part of the structure is of aluminium alloy, the following shall apply:*

a) The insulation of aluminium alloy components of A or B class divisions, except structure which, in the opinion of the Society, is non-load-bearing, shall be such that the temperature of the structural core does not rise more than 200°C above the ambient temperature at any time during the applicable fire exposure to the standard fire test, and

b) Special attention shall be given to the insulation of aluminium alloy components of columns, stanchions and other structural members required to support lifeboat and liferaft stowage, launching and embarkation areas, and A and B class divisions to ensure:

1) that for such members supporting lifeboat and liferaft areas and A class divisions, the temperature rise limitation specified in the preceding item a) shall apply at the end of one hour, and

2) that for such members required to support B class divisions, the temperature rise limitation specified in the preceding item a) shall apply at the end of half an hour.

4 Machinery spaces of category A

4.1 Crowns and casings

4.1.1 *Crowns and casings of machinery spaces of category A shall be of steel construction and shall be insulated as required by Ch 4, Sec 5, Tab 5 and Ch 4, Sec 5, Tab 7, as appropriate.*

4.2 Floor plating

4.2.1 *The floor plating of normal passageways in machinery spaces of category A shall be made of steel.*

5 Materials of overboard fittings

5.1 General

5.1.1 *Materials readily rendered ineffective by heat shall not be used for overboard scuppers, sanitary discharges, and other outlets which are close to the waterline and where the failure of the material in the event of fire would give rise to danger of flooding.*

6 Protection of cargo tank structure against pressure or vacuum

6.1 Reference to Part D

6.1.1 The requirements relevant to the protection of cargo tank structure against pressure or vacuum are given in Pt D, Ch 7, Sec 4, [4.2] and Pt D, Ch 7, Sec 4, [4.5].

Section 8 Escape

1 Notification of crew and passengers

1.1 Application

1.1.1 The provisions of [1.2] apply to ships of all types and those of [1.3] and [1.4] apply to passenger ships.

1.2 General emergency alarm system

1.2.1 *A general emergency alarm system required in Ch 2, Sec 3, [3.14] shall be used for notifying crew and passengers of a fire.*

1.3 Special alarm to summon the crew

1.3.1 *A special alarm, operated from the navigation bridge or fire control station, shall be fitted to summon the crew. This alarm may be part of the ship's general alarm system but it shall be capable of being sounded independently of the alarm to the passenger spaces.*

1.4 Public address systems

1.4.1 *A public address system or other effective means of communication complying with the requirements of Ch 2, Sec 3, [3.15] shall be available throughout the accommodation and service spaces and control stations and open decks.*

2 Means of escape

2.1 General requirements

2.1.1 *Unless expressly provided otherwise in this Article, at least two widely separated and ready means of escape shall be provided from all spaces or groups of spaces.*

2.1.2 *Lifts shall not be considered as forming one of the means of escape as required by this Article.*

2.2 Means of escape from control stations, accommodation spaces and service spaces

2.2.1 Application

The provisions of [2.2.2] apply to ships of all types, those of [2.2.3] apply to passenger ships and those of [2.2.4] apply to cargo ships.

2.2.2 General requirements

a) Stairways and ladders shall be so arranged as to provide ready means of escape to the lifeboat and liferaft embarkation deck from passenger and crew accommodation spaces and from spaces in which the crew is normally employed, other than machinery spaces.

b) Unless expressly provided otherwise in this Article, a corridor, lobby, or part of a corridor from which there is only one route of escape shall be prohibited. Dead-end corridors used in service areas which are necessary for the practical utility of the ship, such as fuel oil stations and athwartship supply corridors, shall be permitted, provided such dead-end corridors are separated from crew accommodation areas and are inaccessible from passenger accommodation areas. Also, a part of a corridor that has a depth not exceeding its width is considered a recess or local extension and is permitted.

c) All stairways in accommodation and service spaces and control stations shall be of steel frame construction except where the Society sanctions the use of other equivalent material.

d) If a radiotelegraph station has no direct access to the open deck, two means of escape from, or access to, the station shall be provided, one of which may be a porthole or window of sufficient size or other means to the satisfaction of the Society.

e) Doors in escape routes shall, in general, open in way of the direction of escape, except that:

1) individual cabin doors may open into the cabins in order to avoid injury to persons in the corridor when the door is opened, and

2) doors in vertical emergency escape trunks may open out of the trunk in order to permit the trunk to be used both for escape and for access.

2.2.3 Means of escape in passenger ships

a) Escape from spaces below the bulkhead deck

1) Below the bulkhead deck, two means of escape, at least one of which shall be independent of watertight doors, shall be provided from each watertight compartment or similarly restricted space or group of spaces. Exceptionally, the Society may dispense with one of the means of escape for crew spaces that are entered only occasionally, if the required escape route is independent of watertight doors.

2) Where the Society has granted dispensation under the provisions of a) 1) above, this sole means of escape shall provide safe escape. However, stairways shall not be less than 800 mm in clear width with handrails on both sides.

b) Escape from spaces above the bulkhead deck

Above the bulkhead deck there shall be at least two means of escape from each main vertical zone or similarly restricted space or group of spaces, at least one of which shall give access to a stairway forming a vertical escape.

c) Direct access to stairway enclosures

Stairway enclosures in accommodation and service spaces shall have direct access from the corridors and be of a sufficient area to prevent congestion, having in view the number of persons likely to use them in an emergency. Within the perimeter of such stairway enclosures, only public toilets, lockers of non-combustible material providing storage for non-hazardous safety equipment and open information counters are permitted. Only corridors, lifts, public toilets, special category spaces and open ro-ro spaces to which any passengers carried can have access, other escape stairways required by the following item d) and external areas are permitted to have direct access to these stairway enclosures. Public spaces may also have direct access to stairway enclosures except for the backstage of a theatre. Small corridors or lobbies used to separate an enclosed stairway from galleys or main laundries may have direct access to the stairway provided they have a minimum deck area of 4,5 m^2, a width of no less than 900 mm and contain a fire hose station.

d) Details of means of escape

1) At least one of the means of escape required by the preceding items a) 1) and b) shall consist of a readily accessible enclosed stairway, which shall provide continuous fire shelter from the level of its origin to the appropriate lifeboat and liferaft embarkation decks, or to the uppermost weather deck if the embarkation deck does not extend to the main vertical zone being considered. In the latter case, direct access to the embarkation deck by way of external open stairways and passageways shall be provided and shall have emergency lighting in accordance with Ch 2, Sec 3 and slip-free surfaces underfoot. Boundaries facing external open stairways and passageways forming part of an escape route and boundaries in such a position that their failure during a fire would impede escape to the embarkation deck shall have fire integrity, including insulation values, in accordance with Ch 4, Sec 5, Tab 1 to Ch 4, Sec 5, Tab 4, as appropriate.

2) Protection of access from the stairway enclosures to the lifeboat and liferaft embarkation areas shall be provided either directly or through protected internal routes which have fire integrity and insulation values for stairway enclosures as determined by Ch 4, Sec 5, Tab 1 to Ch 4, Sec 5, Tab 4, as appropriate.

3) Stairways serving only a space and a balcony in that space shall not be considered as forming one of the required means of escape.

4) Each level within an atrium shall have two means of escape, one of which shall give direct access to an enclosed vertical means of escape meeting the requirements of d) 1) above.

The same requirement applies in general to public spaces spanning two decks.

5) The widths, number and continuity of escapes shall be in accordance with the requirements in Ch 4, Sec 15.

e) Marking of escape routes

1) In addition to the emergency lighting required by Pt D, Ch 11, Sec 5 and Ch 2, Sec 3, the means of escape, including stairways and exits, shall be marked by lighting or photoluminescent strip indicators placed not more than 300 mm above the deck at all points of the escape route, including angles and intersections. The marking must enable passengers to identify the routes of escape and readily identify the escape exits. If electric illumination is used, it shall be supplied by the emergency source of power and it shall be so arranged that the failure of any single light or cut in a lighting strip will not result in the marking being ineffective. Additionally, escape route signs and fire equipment location markings shall be of photoluminescent material or marked by lighting. The Society shall ensure that such lighting or photoluminescent equipment has been evaluated, tested and applied in accordance with Ch 4, Sec 15.

2) In passenger ships carrying more than 36 passengers, the requirements of item e) 1) above shall also apply to the crew accommodation areas.

3) In lieu of the escape route lighting system required by item e) 1) above, alternative evacuation guidance systems may be accepted if approved.

f) Normally locked doors that form part of an escape route

Cabin and stateroom doors shall not require keys to unlock them from inside the room. Neither shall there be any doors along any designated escape route which require keys to unlock them when moving in the direction of escape.

Escape doors from public spaces that are normally latched shall be fitted with a means of quick release. Such means shall consist of a door-latching mechanism incorporating a device that releases the latch upon the application of a force in the direction of escape flow. Quick release mechanisms shall be designed and installed to the satisfaction of the Society and, in particular:

1) consist of bars or panels, the actuating portion of which extends across at least one half of the width of the door leaf, at least 760 mm and not more than 1120 mm above the deck

2) cause the latch to release when a force not exceeding 67 N is applied, and

3) not be equipped with any locking device, set screw or other arrangement that prevents the release of the latch when pressure is applied to the releasing device.

g) Evacuation analysis for passenger ships

For passenger ships carrying more than 36 passengers and ro-ro passenger ships, escape routes shall be evaluated by an evacuation analysis early in the design process, in line with IMO Circular MSC.1/Circ.1533 "Revised Guidelines on evacuation analyses for new and existing passenger ships".

The analysis shall be used to identify and eliminate, as far as practicable, congestion which may develop during an abandonment, due to normal movement of passengers and crew along escape routes, including the possibility that crew may need to move along these routes in a direction opposite to the movement of passengers. In addition, the analysis shall be used to demonstrate that escape arrangements are sufficiently flexible to provide for the possibility that certain escape routes, assembly stations, embarkation stations or survival craft may not be available as a result of a casualty.

2.2.4 Means of escape in cargo ships

a) General

At all levels of accommodation there shall be provided at least two widely separated means of escape from each restricted space or group of spaces.

b) Escape from spaces below the lowest open deck

Below the lowest open deck the main means of escape shall be a stairway and the second escape may be a trunk or a stairway.

c) Escape from spaces above the lowest open deck

Above the lowest open deck the means of escape shall be stairways or doors to an open deck or a combination thereof.

d) Dead-end corridors

No dead-end corridors having a length of more than 7 m shall be accepted.

e) Width and continuity of escape routes

The width, number and continuity of escape routes shall be in accordance with the requirements in Ch 4, Sec 15.

f) Dispensation from two means of escape

Exceptionally the Society may dispense with one of the means of escape, for crew spaces that are entered only occasionally, if the required escape route is independent of watertight doors.

2.3 Means of escape from machinery spaces

2.3.1 Application

The provisions of [2.3.2] apply to passenger ships, those of [2.3.3] apply to cargo ships.

2.3.2 Means of escape on passenger ships

Means of escape from each machinery space in passenger ships shall comply with the following provisions:

a) Escape from spaces below the bulkhead deck

Where the space is below the bulkhead deck, the two means of escape shall consist of either:

1) two sets of steel ladders as widely separated as possible, leading to doors in the upper part of the space, similarly separated and from which access is provided to the appropriate lifeboat and liferaft embarkation decks. One of these ladders shall be located within a protected enclosure that satisfies Ch 4, Sec 5, [1.3.3], category (2), or Ch 4, Sec 5, [1.3.4], category (4), as appropriate, from the lower part of the space it serves to a safe position outside the space. Self-closing fire doors of the same fire integrity standards shall be fitted in the enclosure. The ladder shall be fixed in such a way that heat is not transferred into the enclosure through non-insulated fixing points. The protected enclosure shall have minimum internal dimensions of at least 800 mm × 800 mm, and shall have emergency lighting provisions, or

2) one steel ladder leading to a door in the upper part of the space from which access is provided to the embarkation deck and additionally, in the lower part of the space and in a position well separated from the ladder referred to, a steel door capable of being operated from each side and which provides access to a safe escape route from the lower part of the space to the embarkation deck.

b) Escape from spaces above the bulkhead deck

Where the space is above the bulkhead deck, the two means of escape shall be as widely separated as possible and the doors leading from such means of escape shall be in a position from which access is provided to the appropriate lifeboat and liferaft embarkation decks. Where such means of escape require the use of ladders, these shall be of steel.

c) Dispensation from two means of escape

In a ship of less than 1000 gross tonnage, the Society may dispense with one of the means of escape, due regard being paid to the width and disposition of the upper part of the space. In a ship of 1000 gross tonnage and above, the Society may dispense with one means of escape from any such space, including a normally unattended auxiliary machinery space, so long as either a door or a steel ladder provides a safe escape route to the embarkation deck, due regard being paid to the nature and location of the space and whether persons are normally employed in that space. In the steering gear space, a second means of escape shall be provided when the emergency steering position is located in that space unless there is direct access to the open deck.

d) Escape from machinery control rooms

Two means of escape shall be provided from a machinery control room located within a machinery space, at least one of which will provide continuous fire shelter to a safe position outside the machinery space.

e) Inclined ladders and stairways

All inclined ladders/stairways fitted to comply with a) with open treads in machinery spaces being part of or providing access to escape routes but not located within a protected enclosure shall be made of steel. Such ladders/stairways shall be fitted with steel shields attached to their undersides, such as to provide escaping personnel protection against heat and flame from beneath.

Inclined ladders/stairways in machinery spaces being part of, or providing access to, escape routes but not located within a protected enclosure shall not have an inclination greater than 60° and shall not be less than 600 mm in clear width. Such requirement need not be applied to ladders/stairways not forming part of an escape route, only provided for access to equipment or components, or similar areas, from one of the main platforms or deck levels within such spaces.

f) Escape from main workshops within machinery spaces

Two means of escape shall be provided from the main workshop within a machinery space. At least one of these escape routes shall provide a continuous fire shelter to a safe position outside the machinery space.

2.3.3 Means of escape on cargo ships

Means of escape from each machinery space in cargo ships shall comply with the following provisions:

a) Escape from machinery spaces of category A

Except as provided in the following item b), two means of escape shall be provided from each machinery space of category A. In particular, one of the following provisions shall be complied with:

1) two sets of steel ladders, as widely separated as possible, leading to doors in the upper part of the space, similarly separated and from which access is provided to the open deck. One of these ladders shall be located within a protected enclosure that satisfies Ch 4, Sec 5, [1.4.3], category (4), from the lower part of the space it serves to a safe position outside the space. Self-closing fire doors of the same fire integrity standards shall be fitted in the enclosure. The ladder shall be fixed in such a way that heat is not transferred into the enclosure through non-insulated fixing points. The enclosure shall have minimum internal dimensions of at least 800 mm × 800 mm, and shall have emergency lighting provisions, or

2) one steel ladder leading to a door in the upper part of the space from which access is provided to the open deck and, additionally, in the lower part of the space and in a position well separated from the ladder referred to, a steel door capable of being operated from each side and which provides access to a safe escape route from the lower part of the space to the open deck.

b) Dispensation from two means of escape

In a ship of less than 1000 gross tonnage, the Society may dispense with one of the means of escape required under item a), due regard being paid to the dimension and disposition of the upper part of the space.

In addition, the means of escape from machinery spaces of category A need not comply with the requirement for an enclosed fire shelter listed in item a) 1) above. In the steering gear space, a second means of escape shall be provided when the emergency steering position is located in that space unless there is direct access to the open deck.

c) Escape from machinery spaces other than those of category A

From machinery spaces other than those of category A, two escape routes shall be provided except that a single escape route may be accepted for spaces that are entered only occasionally and for spaces where the maximum travel distance to the door is 5 m or less.

Note 1: In machinery spaces other than those of category A, which are not entered only occasionally, the travel distance shall be measured from any point normally accessible to the crew, taking into account machinery and equipment within the space.

d) With regard to application of items b) and c), the following applies:

- Steering gear spaces which do not contain the emergency steering position need only have one means of escape.
- Steering gear spaces containing the emergency steering position can have one means of escape provided it leads directly onto the open deck. Otherwise, two means of escape are to be provided but they do not need to lead directly onto the open deck.
- Escape routes that pass only through stairways and/or corridors are considered as providing a "direct access to the open deck", provided that the escape routes from the steering gear spaces have fire integrity protection equivalent to steering gear spaces or stairways/corridors, whichever is more stringent.

e) Inclined ladders and stairways

All inclined ladders/stairways fitted to comply with a) with open treads in machinery spaces being part of or providing access to escape routes but not located within a protected enclosure shall be made of steel. Such ladders/stairways shall be fitted with steel shields attached to their undersides, such as to provide escaping personnel protection against heat and flame from beneath.

Inclined ladders/stairways in machinery spaces being part of, or providing access to, escape routes but not located within a protected enclosure shall not have an inclination greater than 60° and shall not be less than 600 mm in clear width. Such requirement need not be applied to ladders/stairways not forming part of an escape route, only provided for access to equipment or components, or similar areas, from one of the main platforms or deck levels within such spaces.

f) Escape from machinery control rooms in machinery spaces of category "A"

Two means of escape shall be provided from the machinery control room located within a machinery space. At least one of these escape routes shall provide a continuous fire shelter to a safe position outside the machinery space.

g) Escape from main workshops in machinery spaces of category "A"

Two means of escape shall be provided from the main workshop within a machinery space. At least one of these escape routes shall provide a continuous fire shelter to a safe position outside the machinery space.

2.4 Means of escape on passenger ships from special category and open ro-ro spaces to which any passengers carried can have access

2.4.1 *In special category and open ro-ro spaces to which any passengers carried can have access, the number and locations of the means of escape both below and above the bulkhead deck shall be to the satisfaction of the Society and, in general, the safety of access to the embarkation deck shall be at least equivalent to that provided for in items a) 1), b), d) 1) and d) 2) of [2.2.3].*

Such spaces shall be provided with designated walkways to the means of escape with a breadth of at least 600 mm. The parking arrangements for the vehicles shall maintain the walkways clear at all times.

2.4.2 Direct access to special category spaces

One of the escape routes from the machinery spaces where the crew is normally employed shall avoid direct access to any special category space.

2.5 Means of escape from ro-ro spaces

2.5.1 *At least two means of escape shall be provided in ro-ro spaces where the crew are normally employed. The escape routes shall provide a safe escape to the lifeboat and liferaft embarkation decks and shall be located at the fore and aft ends of the space.*

One of the means of escape should be a stairway, the second escape may be a trunk or a stairway.

The fore and aft ends of the ro-ro space are considered as the areas being within the distance equal to the breadth of the ro-ro space, measured at its widest point, from its forward most and aftmost point.

2.6 Additional requirements for ro-ro passenger ships

2.6.1 General

a) Escape routes shall be provided from every normally occupied space on the ship to an assembly station. These escape routes shall be arranged so as to provide the most direct route possible to the assembly station, and shall be marked with symbols in accordance with the recommendations of IMO Resolution A.1116 (30).

b) The escape route from cabins to stairway enclosures shall be as direct as possible, with a minimum number of changes in direction. It shall not be necessary to cross from one side of the ship to the other to reach an escape route. It shall not be necessary to climb more than two decks up or down in order to reach an assembly station or open deck from any passenger space.

c) External routes shall be provided from open decks, as referred to in item b), to the survival craft embarkation stations.

d) Where enclosed spaces adjoin an open deck, openings from the enclosed space to the open deck shall, where practicable, be capable of being used as an emergency exit.

e) Escape routes shall not be obstructed by furniture and other obstructions. With the exception of tables and chairs which may be cleared to provide open space, cabinets and other heavy furnishings in public spaces and along escape routes shall be secured in place to prevent shifting if the ship rolls or lists. Floor coverings shall also be secured in place. When the ship is under way, escape routes shall be kept clear of obstructions such as cleaning carts, bedding, luggage and boxes of goods.

2.6.2 Instruction for safe escape

a) Decks shall be sequentially numbered, starting with "1" at the tank top or lowest deck. The numbers shall be prominently displayed at stair landings and lift lobbies. Decks may also be named, but the deck number shall always be displayed with the name.

b) Simple "mimic" plans showing the "you are here" position and escape routes marked by arrows shall be prominently displayed on the inside of each cabin door and in public spaces. The plan shall show the directions of escape and shall be properly oriented in relation to its position on the ship.

2.6.3 Strength of handrails and corridors

a) Handrails or other handholds shall be provided in corridors along the entire escape route so that a firm handhold is available at every step of the way, where possible, to the assembly stations and embarkation stations. Such handrails shall be provided on both sides of longitudinal corridors more than 1,8 m in width and transverse corridors more than 1 m in width. Particular attention shall be paid to the need to be able to cross lobbies, atriums and other large open spaces along escape routes. Handrails and other handholds shall be of such strength as to withstand a distributed horizontal load of 750 N/m applied in the direction of the centre of the corridor or space, and a distributed vertical load of 750 N/m applied in the downward direction. The two loads need not be applied simultaneously.

b) The lowest 0,5 m of bulkheads and other partitions forming vertical divisions along escape routes shall be able to sustain a load of 750 N/m to allow them to be used as walking surfaces from the side of the escape route with the ship at large angles of heel.

Section 9 Fire Control Plans

1 Application

1.1 General

1.1.1 This Section applies to passenger ships and cargo ships.

2 Fire control plans

2.1 Compilation of the fire control plans

2.1.1 *General arrangement plans shall be permanently exhibited for the guidance of the ship's officers, showing clearly for each deck the control stations, the various fire sections enclosed by A class divisions, the sections enclosed by B class divisions together with particulars of the fire detection and fire alarm systems, the sprinkler installation, the fire-extinguishing appliances, means of access to different compartments, decks, etc. and the ventilating system, including particulars of the fan control positions, the position of dampers and identification numbers of the ventilating fans serving each section, and the position of fuel oil quick-closing valve remote control and fuel oil pump stops,* or, for ships assigned with the additional service feature **CNGfuel**, **LNGfuel**, **LPGfuel**, **methanolfuel**, **ammoniafuel**, **hydrogenfuel** or **LFPfuel**, position of the fuel supply closing valve and fuel supply pumps or compressor stops.

Alternatively, at the discretion of the Society, the aforementioned details may be set out in a booklet, a copy of which shall be supplied to each officer, and one copy shall at all times be available on board in an accessible position.

Plans and booklets shall be kept up to date; any alterations thereto shall be recorded as soon as practicable. Description in such plans and booklets shall be in the language or languages required by the Society. If the language is neither English nor French, a translation into one of those languages shall be included.

In addition, instructions concerning the maintenance and operation of all the equipment and installations on board for the fighting and containment of fire shall be kept under one cover, readily available in an accessible position.

The graphical symbols for the fire control plan are to be in accordance with IMO Resolution A.952(23) and table 3 of IMO Resolution A.1116(30) where the symbols for a specific item are differently expressed in IMO Resolutions A.952(23) and A.1116(30).

2.1.2 The number of portable equipment available at each location is to be specified.

2.1.3 *In ships carrying more than 36 passengers, plans and booklets required by [2.1.1] shall provide information regarding fire protection, fire detection and fire extinction* including*:*

- ship's keel laying date and application of the SOLAS Convention and amendments
- which additional fire safety measures, if any, were applied
- dates and description of any modifications to the ship which in any way alter its fire safety.

2.1.4 Special equipment provided for the carriage of dangerous goods, if fitted, is to be shown.

2.1.5 Where fitted in compliance with the requirements of Ch 4, Sec 11, [2], the controls for jettisoning fuel for auxiliary vehicles are to be shown.

2.1.6 For ships equipped with an exhaust gas pollution prevention system, in line with the requirements of Ch 1, Sec 11, [3.6] or Ch 1, Sec 11, [4.8] or in line with the requirements of risk analysis performed in line with Ch 1, Sec 11, [5.2], the following elements are to be shown:

- storage location of personal protective equipment (PPE)
- location of eyewash station.

2.1.7 For ships equipped with a Ballast Water Management System, in line with the requirements of Ch 1, Sec 13, [2.10], the following elements are to be shown:

- storage location of personal protective equipment (PPE)
- location of decontamination showers and eyewash;
- location of emergency breathing apparatus (EEBD), if any;
- storage location of the personal ozone detectors pursuant to Ch 1, Sec 13, [2.10.5]
- storage location of the two-way portable radiotelephone pursuant to Ch 1, Sec 13, [2.10.6].

2.1.8 In compliance with the requirements of NR547, Section 8, for ships assigned the additional service feature **fuelcell**, the emergency shutdown push buttons are to be shown.

2.1.9 In compliance with the requirements of NR529, for ships assigned the additional service feature **LNGfuel** or **CNGfuel** and provided with ESD-protected machinery space, the emergency shutdown push buttons are to be shown.

2.1.10 In compliance with the requirements of NR678, for ships assigned the additional service feature **hydrogenfuel**, storage location of personal protective equipment (PPE) is to be shown.

2.1.11 In compliance with the requirements of NR671, for ships assigned the additional service feature ammoniafuel, the following elements are to be shown:

- storage location of personal protective equipment (PPE)
- location of the emergency showers and eye rinsing equipment.

2.1.12 In compliance with the requirements of Pt F, Ch 10, Sec 3, for ships assigned the additional class notation **CBRN** or **CBRN-WASHDOWN**, the following elements are to be shown:

- citadel and/or shelter
- storage location of personal protective equipment (PPE)
- CBRN detection system
- pre-wetting and wash down system and associated control valves.

2.1.13 in compliance with the requirements of Pt F, Ch 13, Sec 2, for ships assigned the additional class notation **ECFP-1**, **ECFP-2** or **ECFP-3**, the following elements are to be shown, as applicable:

- Storage location of portable equipment (water mist lances, portable fire-fighting devices for stacked containers, fire fighter's outfits, portable thermal imaging camera)
- Compressed air system for breathing apparatus
- Fixed water monitors covering the on-deck cargo stowage area and associated controls
- Water-spray system below hatch cover and associated control valves
- Flooding system for the cargo hold and associated control valves
- Water-spray system for the protection of the superstructure block or equivalent system and associated control valves.

2.2 Location of the fire control plans

2.2.1 *A duplicate set of fire control plans or a booklet containing such plans shall be permanently stored in a prominently marked weathertight enclosure outside the deckhouse for the assistance of shore-side fire-fighting personnel.*

Section 10 Helicopter Facilities

1 General

1.1 Application

1.1.1 In addition to complying with the requirements of the other Sections of this Chapter, as appropriate, ships equipped with helicopter or airborne vehicle facilities are to comply with those of this Section. For the purpose of applying the requirements of this Section, airborne vehicles are to be considered as helicopters.

Items d) and e) of [3.1.1] and Articles [5] and [6] do not contain requirements applicable for the purpose of classification; they have been reproduced for reference purposes only.

2 Structure

2.1 Construction of steel or other equivalent materials

2.1.1 *In general, the construction of the helidecks shall be of steel or other equivalent materials. If the helideck forms the deckhead of a deckhouse or superstructure, it shall be insulated to A-60 class standard.*

2.2 Construction of aluminium or other low melting point metals

2.2.1 *If the Society permits aluminium or other low melting point metal construction that is not made equivalent to steel and if the platform is located above the ship's deckhouse or similar structure, the following conditions shall be satisfied:*

a) the deckhouse top and bulkheads under the platform shall have no opening

b) windows under the platform shall be provided with steel shutters.

2.3 Means of escape

2.3.1 *A helideck shall be provided with both a main and an emergency means of escape and access for fire-fighting and rescue personnel. These shall be located as far apart from each other as is practicable and preferably on opposite sides of the helideck.*

3 Fire-fighting appliances

3.1 General

3.1.1 *In close proximity to the helideck, the following fire-fighting appliances shall be provided and stored near the means of access to that helideck:*

a) at least two dry powder extinguishers having a total capacity of not less than 45 kg

b) carbon dioxide extinguishers of a total capacity of not less than 18 kg or equivalent

c) foam firefighting appliances complying with the provisions of Ch 4, Sec 15, [14]

d) two sets of fire-fighter's outfits, and

e) at least the following equipment, stored in a manner that provides for immediate use and protection from the elements:

- *adjustable wrench*
- *blanket, fire-resistant*
- *cutters, bolt 60 cm*
- *hook, grab or salving*
- *hacksaw, heavy duty complete with 6 spare blades*
- *ladder*
- *lift line 5 mm diameter and 15 m in length*
- *pliers, side-cutting*
- *set of assorted screwdrivers, and*
- *harness knife complete with sheath.*

3.2 Drainage facilities

3.2.1 *Drainage facilities in way of helidecks shall be constructed of steel and shall lead directly overboard independent of any other system and shall be designed so that drainage does not fall onto any part of the ship.*

4 Helicopter refuelling and hangar facilities (if fitted)

4.1 Helicopter fuel system and refuelling facilities

4.1.1 Fuels having a flashpoint below or equal to 43°C

Helicopter fuel systems and refuelling facilities for fuels having a flashpoint below or equal to 43°C are to comply with the requirements of Ch 4, Sec 11.

4.1.2 Fuels having a flashpoint above 43°C

Helicopter fuel systems and refuelling facilities for fuels having a flashpoint above 43°C are to comply with the following requirements:

- Ch 4, Sec 11, [1.4.1], Ch 4, Sec 11, [1.4.3]
- Ch 4, Sec 11, [2.2.1]
- Ch 4, Sec 11, [3.6.1], Ch 4, Sec 11, [3.6.2], Ch 4, Sec 11, [3.6.3] and Ch 4, Sec 11, [3.6.4]
- Ch 4, Sec 11, [4.1.1]

Tanks and associated equipment shall be protected against physical damage and from a fire in an adjacent space or area.

4.2 Arrangement of hangar facilities and spaces containing the refuelling installations

4.2.1 Application

Helicopter refuelling and hangar facilities are to comply with the requirements of [4.2.2] to [4.2.4] whatever the flashpoint of the helicopter fuel.

4.2.2 Suppression of fire

Hangar, refuelling and maintenance facilities and spaces where fuel handling is intended are to be treated as a category A machinery space with regards to fire protection, fixed fire extinguishing and detection system requirements.

Hangar facilities and spaces containing the refuelling installations are also to comply with the requirements of Ch 4, Sec 11, [4.4.2].

4.2.3 Helicopter refuelling and hangar facilities are to comply with the requirements of Ch 4, Sec 11, [4.2.2].

4.2.4 Electric equipment and wiring

Electric equipment and wiring in enclosed hangars or enclosed spaces containing refuelling installations shall comply with the requirements of Ch 4, Sec 13, [2.2], Ch 4, Sec 13, [2.3], and Ch 4, Sec 13, [2.4] or, for fuels having a flashpoint below or equal to 43°C, see Ch 4, Sec 11, [4.3.1]. These requirements are summarized below.

In order to facilitate the selection of appropriate electrical apparatus and the design of suitable electrical installations, hazardous areas are divided into zone 0, 1 and 2 according to Ch 2, Sec 1, [3.13.3]. The different spaces and areas are to be classified according to:

- Tab 1 for fuels having a flashpoint above 43°C
- Ch 4, Sec 11, Tab 1 for fuels having a flashpoint below or equal to 43°C.

Table 1 : Space descriptions and hazardous area zones for fuels having a flashpoint above 43°C

N°	Description of spaces or areas	Hazardous area
1	Enclosed hangar or enclosed spaces containing refuelling installations if the ventilation rate is less than 10 air changes per hour	Zone 1
2	Areas below a height of 450 mm from the deck in enclosed hangar or enclosed spaces containing refuelling installations, if the ventilation system is so designed and operated as to provide continuous ventilation of the space at the rate of at least 10 air changes per hour	Zone 1
3	Exhaust ventilation ducts serving enclosed hangar or enclosed spaces containing refuelling installations	Zone 1
4	Areas above a height of 450 mm from the deck in enclosed hangar or enclosed spaces containing refuelling installations, if the ventilation system is so designed and operated as to provide continuous ventilation of the space at the rate of at least 10 air changes per hour	Zone 2

5 Occasional and emergency helicopter operations

5.1 General

5.1.1 *Where helicopters land or conduct winching operations on an occasional or emergency basis on ships without helidecks, fire-fighting equipment fitted in accordance with the requirements of Ch 4, Sec 1 may be used. This equipment shall be made readily available in close proximity to the landing or winching areas during helicopter operations.*

5.1.2 Helicopter landing areas are to be provided with foam firefighting appliances in accordance with the requirements of Ch 4, Sec 15, [14.3.4].

6 Operations manual

6.1 General

6.1.1 *Each helicopter facility shall have an operations manual, including a description and a checklist of safety precautions, procedures and equipment requirements. This manual may be part of the ship's emergency response procedures.*

Section 11 Fuel for Auxiliary Vehicles

1 General

1.1 Application

1.1.1 This Section applies to filling, storage and refuelling arrangements for oil fuels dedicated to auxiliary vehicles used during normal ship operation such as zodiac, jet ski or helicopter.

1.1.2 This Section applies neither to the transportation of petroleum products as cargo nor to the ship fuel oil system.

1.1.3 Fuels covered by this section are typically jet A-1 aviation fuel, diesel or gasoline and may have a flashpoint below 60°C.

1.1.4 This Section does not cover installations for toxic fuels. In case an installation for toxic fuel is foreseen, a dedicated risk assessment covering this specific risk is to be performed and the installation is to be considered on a case-by-case basis by the Society.

1.1.5 The requirements of this Section may be disregarded for fuels having a flashpoint above 43°C provided:

- the fuel tanks are located outside of machinery spaces of category A
- provisions for the measurement of oil temperature are provided on the suction pipe of the fuel pumps
- stop valves and/or cocks are provided on the inlet side and outlet side of the fuel strainers
- pipe joints of welded construction or of circular cone type or spherical type union joint are applied as much as possible
- fuel pipes are routed out of high fire risk spaces such as machinery spaces of category A, galleys, stores, ro-ro spaces, cargo spaces
- the relevant provisions of Ch 1, Sec 10 are complied with.

Whatever their flashpoint, helicopter and airborne vehicle fuel systems are to comply with the requirements of Ch 4, Sec 10, [4].

1.1.6 Two types of installations are foreseen:

- Jettisonable fuel tanks, with manual refuelling of the auxiliary vehicles. In addition to the requirements of Article [1] and [4], the arrangement of jettisonable fuel tanks is to comply with the requirements of Article [2]
- Fixed installations including fuel tanks, filling station and refuelling station. In addition to the requirements of Article [1] and [4], fixed fuel installation are to comply with the requirements of Article [3].

Both kinds of installations may be installed on a ship, if dedicated to different fuels.

As a general principle, the aggregate quantity of fuel for auxiliary vehicles carried on board is to be kept to a minimum, considering fuel(s) carried in portable and fixed fuel tanks. It is to be demonstrated that the total quantity of fuel for auxiliary vehicles carried on board corresponds to, and does not exceed, the ship's operational needs, taking into account the intended use of the auxiliary vehicles, possible refilling frequency etc.

1.2 Definitions

1.2.1 Fuel

In this Section, “fuel” refers to fuel for auxiliary vehicles.

1.2.2 Jettisonable tank

A jettisonable tank is a tank capable of being jettisoned, i.e. thrown overboard, in case of an emergency.

1.2.3 Flame screen

A flame screen is a device utilizing wire mesh to prevent the passage of unconfined flames. Flame screens required in this section are to be approved in accordance with Pt D, Ch 7, App 1.

1.2.4 Fuel handling

Fuel handling includes fuel pumping as well as any operation on the fuel that could be needed between storage onboard and refuelling the auxiliary vehicle.

1.2.5 Filling station

The filling station refers to the area or space containing the connection between the shipboard fuel piping system and the shore piping system, for the purpose of filling the fuel tanks. The filling station is sometimes referred to as the “bunkering station”.

1.2.6 Refuelling station

In this Section, the refuelling station refers to the area or space where the auxiliary vehicles or portable tanks are refuelled.

1.2.7 Storage hold

In this Section, the storage hold refers the space where an independent tank containing fuel for auxiliary vehicles is located.

1.3 Segregation

1.3.1 Facilities for fuel for auxiliary vehicles are to be segregated from any other fuel system.

1.4 Storage arrangement

1.4.1 *A designated area is to be provided for the storage of fuel tanks, which is to be:*

- *as remote as practicable from accommodation spaces, escape routes and embarkation stations, and*
- *isolated from areas containing a source of vapour ignition.*

1.4.2 The fuel tank storage area is to be located outside of machinery spaces not dedicated to the storage or handling of this fuel, accommodation spaces, service spaces and control stations, and is to comply with the requirements of [2.1] or [3.2] as applicable.

1.4.3 *The fuel storage area is to be provided with arrangements whereby fuel spillage may be collected and drained to a safe location.*

1.5 Vapour detection

1.5.1 The ship is to be provided with at least two portable gas detectors capable of measuring flammable vapour concentrations in air and at least two portable oxygen analysers.

Note 1: The number of portable detection instruments required above is considered equivalent to one portable instrument for measuring flammable vapour concentration, one portable instrument for measuring oxygen and sufficient spares.

Note 2: Gas detectors are to be of a type approved by the Society.

1.6 Marking and instructions

1.6.1 All facilities for the storage and handling of fuel for auxiliary vehicles on board are to be grade identified.

1.6.2 The fuel storage and handling areas are to be permanently marked. Instructions for filling fuel and, if appropriate, emptying fuel, are to be posted in the vicinity of the filling area.

1.6.3 Installations for fuel for auxiliary vehicles are to be taken into consideration in the emergency procedures related to safety and pollution prevention.

2 Jettisonable fuel tanks

2.1 Storage arrangement

2.1.1 Jettisonable fuel tanks are in principle to be stored on the open deck at a location complying with the requirements of [2.1.2], [2.1.3] and [2.1.4].

As an alternative, jettisonable tanks may be installed in an enclosed space provided compliance with [2.1.2], [2.1.3] and with the requirements dedicated to independent tanks storage holds in [3.1.3] and [3.2], except [3.2.2], are complied with.

2.1.2 In case of an emergency, it is to be possible to:

- Either dispose quickly of the tanks through an overboard chute or equivalent arrangement; or
- Quickly drain the full content of the tank to the sea through a quick-draining mechanism.

The control for the disposal or quick-drainage of the tanks is to be available from a location:

- as remote as possible from the storage area but from which the proper activation of the system can be visually ascertained, and
- as remote as possible from any pre-designed evacuation route

This control position is to be reported on the fire control and safety plan and is to be provided with adequate signage.

2.1.3 The proper functioning of overboard chutes is to be demonstrated through a functioning test. The test is to be carried out under load after installation of the chute on board.

2.1.4 For jettisonable fuel tanks stored on the open deck:

a) The tanks are to be suitably secured and protected from physical damage due to e.g. dropped objects or severe weather conditions

b) The tanks are to be stored in a well-ventilated area

c) Suitable drip trays are to be provided in way of the fuel tanks, fitted with means to drain any fuel leakage to a dedicated tank complying with the requirements of [3.5.2]. Alternatively, drip trays without draining means may be accepted provided their capacity is sufficient to contain all the fuel stored in any one of the tanks, considering a 10% margin. The arrangement of the drip tray is to prevent splashing due to ship motion. Drip trays are also to comply with the relevant requirements of Ch 1, Sec 10, [5.10.4].

2.2 Tank design

2.2.1 *Where portable fuel tanks are used, special attention shall be given to:*

- *design of the tank for its intended purpose*
- *mounting and securing arrangements*
- *electric bonding; and*
- *inspection procedures.*

2.2.2 Portable tanks are to be constructed and approved according to IMO IMDG Code for the transported fuel.

2.2.3 Each portable tank is to be clearly marked to indicate its content.

2.2.4 Non portable fuel tanks are to comply with the requirements of [3.1].

3 Fixed fuel installations

3.1 Tank design

3.1.1 Fuel tanks are to comply with the requirements of Ch 1, Sec 10 for fuel oil tanks and flammable liquid tanks. The scantlings of fuel tanks are to be in compliance with the provisions of Pt B, Ch 5, Sec 6 and Part B, Chapter 7.

3.1.2 High and low level alarm arrangements are to be provided. High level alarm is to indicate when fuel tanks are close to being filled in excess of maximum operating levels.

3.1.3 Fuel tanks are to be part of the ship's structure.

Independent fuel tanks of limited capacity may however be permitted provided:

a) the scantlings of independent tanks are in compliance with the provisions of Pt B, Ch 5, Sec 6 and Part B, Chapter 7, except that the net thickness is not to be less than 5 mm.

b) the requirements of [3.2] are complied with.

c) suitable drip trays are provided in way of the tanks, in line with [3.4.7].

3.1.4 Fuel *tanks are to be fitted with a cock or valve directly on the tank capable of being closed from a safe position outside the space concerned in the event of a fire occurring in the space in which the tanks are situated.*

3.1.5 The venting outlet of the fuel tank is to be led to the atmosphere in a safe and well ventilated position and is to be provided with a flame screen.

3.1.6 Overflow pipes are to be fitted to tanks which can be filled by pumping and are designed for a hydrostatic pressure lower than that corresponding to the height of the air pipe. Where fitted, overflow systems are to be dedicated to this specific fuel and are to comply with the applicable requirements of Ch 1, Sec 10.

3.2 Tank location and protection

3.2.1 Application

Structural tanks are to comply with the requirements of [3.2.2] to [3.2.4].

Independent tanks are to comply with [3.2.2] to [3.2.4] and with:

- the requirements of [3.2.5] and [3.2.6]when located in an enclosed space
- the requirements of [3.2.7] and [3.2.8] when located on the open deck.

3.2.2 Protection against collision and grounding

Fuel tanks are to be located as follows, with respect to the rule length L defined in Pt B, Ch 1, Sec 3, [2.1.1] and ship's moulded breadth B defined in Pt B, Ch 1, Sec 3, [2.1.4]:

a) inboard from the ship's side:

B/5 or 11,5 m, whichever is less, measured inboard from the ship side at right angles to the centreline at the level of the summer load line draught. Alternatively, the calculation methodology given in Rule Note NR529, [5.3.4], as amended, may be used to determine the acceptable location of the fuel tanks.

b) inboard from the shell plating or from aft terminal of the ship:

- For passenger ships: B/10 but in no case less than 0,8 m. However, this distance need not be greater than B/15 or 2 m whichever is less where the shell plating is located inboard of B/5 or 11,5 m, whichever is less, as required above.
- For cargo ships:
  - for V_c = 1000 m³:
    0,8 m
  - for 1000 m³ < V_c < 5000 m³:
    0,75 + V_c · 0,2 / 4000 m
  - for 5000 m³ ≤ V_c < 30000 m³:
    0,8 + V_c / 25000 m
  - for V_c ≥ 30000 m³:
    2,0 m

  where:

  V_c : Corresponds to 100% of the gross design volume of the individual fuel tank at 20°C, including domes and appendages.

c) above the bottom shell plating:

B/15 or 2,0 m, whichever is less, measured from the moulded line of the bottom shell plating at the centreline.

d) abaft a transverse plane at 0,08L measured from the forward perpendicular for passenger ships and abaft the collision bulkhead for cargo ships.

Note 1: NR529 Gas fuelled ships

Note 2: These distances are to be measured considering the most restrictive between the outermost and the lowermost boundary of the fuel tank.

3.2.3 *Fuel tanks are to be located outside of category A machinery spaces.* Fuel tanks may however be located in the storage hold or fuel handling room dedicated to this fuel.

3.2.4 Segregation from other spaces

Fuel tanks are to be segregated from machinery spaces, propeller shaft tunnels, dry cargo spaces, accommodation, service spaces and control stations and from drinking water and stores for human consumption, by means of a cofferdam, void space, pump-room, empty tank, ship oil fuel tank, or other similar space complying with the requirements of [3.3]. In the case of independent tanks, a cofferdam need not be required provided:

- the hold space complies with the requirements of [3.3]; or
- the fuel tank is located on the open deck and the distance between the tank boundaries and the boundaries of the spaces from which the tank is to be segregated complies with the requirements of [3.3.3].

3.2.5 Storage holds are to be treated as a category A machinery spaces for structural fire protection, fire extinction and detection purposes.

The boundaries between storage holds and other category A machinery spaces are to have A-60 fire integrity and the boundaries between storage holds for different fuels are to have A-30 fire integrity.

3.2.6 Storage holds are to be dedicated to the storage of one specific fuel. Fuel pumps and other equipment intended for handling this fuel may however be located in the storage hold.

3.2.7 Fuel tanks located on the open deck are to be protected by a manually activated water-spray system with a capacity of at least 5L/min/m² of protected area. The water-spray system is to provide coverage for exposed parts of the fuel tank and for the boundaries of normally manned superstructures facing the fuel tanks and located within 10 m of their boundaries.

Note 1: Both horizontal and vertical surfaces to be protected are to be considered when determining the capacity of the water-spray system.

3.2.8 Decks and superstructure boundaries located within 10 m of the boundaries of the fuel tanks are to be provided with fire integrity equivalent to the fire integrity required with respect to a category A machinery space. Navigation bridge windows however are not required to have such fire integrity.

In addition, fuel tanks are to be segregated from cargo in accordance with the requirements of the International Maritime Dangerous Goods (IMDG) Code where the fuel tanks are regarded as a class 2.1 bulk package.

3.3 Cofferdams

3.3.1 Cofferdams surrounding structural fuel tanks and required by [3.2.4] are to comply with the requirement of this sub-article.

3.3.2 Direct access from the open deck

Access to the cofferdams is to be direct from the open deck. Alternatively, access to the cofferdams may be provided through void spaces or spaces dedicated to fuel handling or storage or machinery spaces, subject to consideration of ventilation aspects.

3.3.3 Access to the cofferdams is to be provided through gas-tight openings, with the following minimum clear width:

- 600 x 600 mm for horizontal openings
- 600 x 800 mm for vertical openings.

3.3.4 Drainage from the cofferdams surrounding fuel tanks is to comply with the requirements of [3.5.1].

3.4 Piping

3.4.1 Fuel piping is to comply with the requirements of Ch 1, Sec 10 for fuel oil piping and flammable liquid piping.

3.4.2 The connections between the various pipe sections are to be carried out by means of butt welding. Other types of connections including threaded connections and flange connections are not permitted.

3.4.3 Fuel piping is to be located at a distance from the ship's side of at least 800 mm measured inboard from the ship's side at right angles to the centerline at the level of the summer load line draught.

3.4.4 Fuel piping is not to be led directly through accommodation spaces, service spaces, electrical equipment rooms, control stations or category A machinery spaces not related to the handling of this specific fuel.

3.4.5 Fuel piping led through ro-ro spaces, special category spaces and on open decks is to be protected against mechanical damage.

3.4.6 Fuel piping in non-hazardous enclosed spaces is to be completely enclosed by a steel gastight double pipe or duct which is to be:

- at an inclination such that the fuel naturally returns towards a safe draining location in the case of leakage or failure in delivery pressure
- fitted with inspection openings with gastight doors in way of connections of pipes within it, with an automatic closing drain-trap leading to a safe location, set in such a way as to discharge leakage of fuel into a safe location
- fitted with a vent pipe at the highest part of the duct. This vent pipe is to be led to the atmosphere in a safe position. The outlet is to be fitted with a flame screen
- of a thickness not less than the minimum thickness given in Ch 1, Sec 10, Tab 6 for pipes in general.

3.4.7 Containment and detection of a leakage

Suitable drip trays are to be provided at locations where fuel leakage could occur, i.e. in way of independent tanks, pumps, tank connections, piping connections, filling manifold etc. The drip trays are to be fitted with means to drain any fuel leakage to a dedicated drainage tank complying with [3.5.2].

An alarm is to be provided in case of fuel leakage in the drip tray.

Note 1: Double walled independent tanks need not be provided with an additional drip tray. It should however be possible to detect, and dispose of, any fuel leakage in the interbarrier space.

3.4.8 Means are to be provided to drain fuel piping after filling and refuelling operations. Means of drainage may however be omitted for fuel piping located in the storage hold.

3.5 Drainage

3.5.1 Drainage and/or bilge pumping of cofferdams and of spaces intended for fuel storage or fuel handling is to be separated from the ship bilge system, and is not to be led to machinery spaces or to other spaces where ignition sources may be present. Drainage directly to the sea is to be avoided as far as possible.

3.5.2 Drainage tank

The tank intended to gather drainage from for spaces intended for fuel storage or fuel handling is to be:

- closed
- dedicated to these spaces
- located outside of the machinery spaces
- provided with a vent pipe to a safe location on the open deck
- fitted with level position indicators with relevant alarms, in order to detect leakages.
- provided with a capacity sufficient to manage the whole content of any one fuel tank.

3.5.3 The space containing the bilge pumps is to be provided with mechanical ventilation complying with [4.4]. If the space has access from another enclosed space, the door is to be self-closing.

3.6 Fuel handling

3.6.1 *Storage tank fuel pumps are to be provided with means which permit shutdown from a safe remote location in the event of a fire. Where a gravity fuelling system is installed, equivalent closing arrangements are to be provided to isolate the fuel source.*

3.6.2 *The fuel pumping unit is to be connected to one tank at a time. The piping between the tank and the pumping unit are to be of steel or equivalent material, as short as possible, and protected against damage.*

3.6.3 *Electrical fuel pumping units and associated control equipment are to be of a type suitable for the location and potential hazards.*

3.6.4 *Fuel pumping units are to incorporate a device which will prevent over-pressurization of the delivery or filling hose.*

3.6.5 Spaces containing fuel handling equipment are to be treated as category A machinery spaces for structural fire protection, fire extinction and detection purposes.

3.7 Filling station

3.7.1 For structural fire protection purposes, enclosed or semi-enclosed filling stations are to be handled as:

- auxiliary machinery spaces of moderate fire risk i.e. cat(11) on passenger ships carrying more than 36 passengers
- other machinery spaces i.e. cat(7) on other ships

In addition, the safety measures detailed in [3.7.2] to [3.7.4] are to be applied.

3.7.2 The boundaries between enclosed or semi-enclosed filling stations and other enclosed spaces are to be A-60 class divisions and reasonably gastight.

3.7.3 Fixed fire-extinguishing system

Enclosed filling stations are to be provided with a fixed fire-extinguishing system suitable for category A machinery spaces. Depending on the quantity of fuel, duration of the filling operation and filling procedure, alternative arrangements based on portable fire extinguishing equipment may be accepted on a case-by-case basis.

Open or semi enclosed filling stations are to be covered by a manually activated water-spray system with a capacity of at least 5L/min/m^2 of protected area (horizontally projected surfaces).

3.7.4 Fixed fire detection and fire alarm system

Enclosed and semi-enclosed filling stations are to be covered by a fixed fire detection and fire alarm system complying with the requirements of Ch 4, Sec 15, [8]. The fixed fire detection system is to combine smoke detection and another way of detecting fire which may be by means of fusible elements designed to melt at temperatures between 98°C and 104°C, or by area fire detection methods.

In the case of an open filling station, a fixed fire detection and alarm system is to cover the filling manifold.

3.8 Refuelling station

3.8.1 Refuelling stations are to be treated as a category A machinery space with regards to fire protection, fixed fire extinguishing and detection system requirements.

3.8.2 Open or semi-enclosed refuelling stations are to be covered by a manually activated water-spray system with a capacity of at least 5L/min/m^2 of protected area (horizontally projected surfaces).

3.8.3 Refuelling equipment

Refuelling hoses are to be designed and constructed according to a recognized standard, made of one continuous length, smooth bore, synthetic rubber construction, and semi-conducting.

Recognized standards for refuelling hoses include, but are not limited to, ISO 1825:2017 type C and EI 1529:2015.

3.8.4 It is to be possible to shut down the refuelling pump from the refuelling station. This control is to be located at an easily accessible position close to the escape from this space or area.

4 Prevention of explosion

4.1 Electrical bonding

4.1.1 Fuel tanks, piping and *equipment used in refuelling or filling operations are to be electrically bonded.*

4.2 Source of ignition

4.2.1 Access to areas intended for or affected by filling, storage, and refuelling of fuel for auxiliary vehicles is to be limited to crew members on duty.

4.2.2 *"NO SMOKING" signs are to be displayed at appropriate locations* in areas intended for the filling, storage, and refuelling of fuel for auxiliary vehicles, as well as in helicopter hangar facilities.

4.2.3 Any equipment which may constitute a source of ignition of flammable vapours is not to be installed in hazardous spaces or areas.

4.2.4 As a general rule, electrical equipment and wiring is not to be fitted in hazardous spaces or areas, unless it is essential for operational purposes or enhancing safety. If electrical equipment is fitted in such spaces, it is to be suitable for use in dangerous environment as per Ch 2, Sec 3, [10].

Portable equipment that need to be used in hazardous spaces or areas is to be of a suitable certified safe type.

Note 1: On a case-by-case basis, the Society might however allow electrical equipment not suitable for use in dangerous environment to be installed in hazardous spaces or areas related to refilling or refuelling operations, provided:

- suitable interlocks and operational procedures are provided to ensure that non-certified safe equipment will be disconnected in all scenarios that may lead to the presence of an explosive atmosphere
- such equipment need not be used during refuelling or refilling operations
- suitable justification of the above is provided

4.2.5 Exhausts of internal combustion machinery are to be led outside of hazardous areas.

4.3 Hazardous areas

4.3.1 In order to facilitate the selection of appropriate electrical apparatus and the design of suitable electrical installations, hazardous areas are divided into zone 0, 1 and 2 according to Ch 2, Sec 1, [3.13.3]. The different spaces and areas are to be classified according to Tab 1.

Note 1: As an alternative to Table 1, more refined hazardous spaces and areas may be defined in line with the requirements of IEC 60079-10 and based on relevant analysis to the satisfaction of the Society.

4.3.2 Protection by overpressure

Where a space has an opening into an adjacent hazardous space or area, it may be made into a non-hazardous space in accordance with the following requirements:

a) A minimum overpressure of 25 Pa (0,25 mbar) with respect to the adjacent, hazardous space or area is to be maintained at all points inside the space and its associated ducts at which leaks are liable to occur, all doors and windows being closed.

b) During initial start-up or after shut-down, it is necessary, before energizing any electrical apparatus within the space which is not suitably protected for the classification of the space in the absence of pressurization, to either ensure that the internal atmosphere is non-hazardous, or proceed with prior purging of sufficient duration that the internal atmosphere may be considered as non-hazardous, and pressurize the space.

   The atmosphere is considered non-hazardous when, at all points in the space, the equipment enclosures and any associated ducts, the concentration of explosive gases or vapours is below 30% of the lower explosive limit. The place of measurement should be judiciously chosen to determine the highest concentration of gas.

c) Monitoring is to be provided to ensure the satisfactory functioning of pressurization of spaces having an opening into a more hazardous zone.

d) Where a flow monitoring device is used to indicate failure of pressurization, it should be verified that either the pressurization level required by item a) is maintained with any door or other opening open, or an alarm is given if any door or opening is not closed.

e) In the event of the loss of overpressure, the following protective measures are to apply to electrical equipment not protected for use in hazardous areas:

   - suitable alarm (visible and audible)
   - immediate action to restore pressurization
   - programmed disconnection of power supply if the pressurization cannot be restored for an extended period or if the concentration of flammable gas is rising to a dangerous level.

4.3.3 Airlock

Access between a hazardous area Zone 1 and a non-hazardous area may be provided through an airlock, consisting of two self-closing, substantially gastight, steel doors without holding back arrangements and capable of maintaining the overpressure. The airlock space is to be mechanically ventilated from a non-hazardous area and maintained at an overpressure with respect to the hazardous area Zone 1, in accordance with [4.3.2].

Table 1 : Space descriptions and hazardous area zones

No.	Description of spaces	Hazardous area
1	The interior of fuel tanks, any pipework or pressure-relief or other venting system for fuel, pipes and equipment containing the fuel or developing flammable gases and vapours. • Drainage tanks as defined in [3.5.2] are covered by this item. • Scuppers and discharges as defined in [3.5.1] are covered by this item • Overflow tanks are covered by this item	Zone 0
2	Enclosed or semi-enclosed filling stations, refuelling stations and installations, enclosed helicopter hangars (for fuels having a flashpoint below or equal to 43°C), storage holds and fuel handling spaces	Zone 1
3	Ventilation ducts serving the spaces identified in item 2 and item 8	Zone 1
4	Areas on open deck, or semi-enclosed spaces on open deck: • within 1,5 m of any exhaust ventilation outlet of a hazardous area zone 1 • within 1,5 m of entrances to, or openings in, filling station or fuel pump room entrances • Within 0.5 m of ventilation inlets of filling stations or fuel pump rooms • Within 0.5 m of any opening into zone 1 spaces	Zone 1
5	Areas on open deck, or semi-enclosed spaces on open deck, within 3m of any venting outlet from the spaces defined in item 1	Zone 1
6	Areas on open deck within filling manifold drip trays and 1,5 m around these	Zone 1
7	Enclosed or semi-enclosed spaces having a direct opening into any of the spaces as identified in item 2 or item 3, unless appropriate measures are taken to prevent flammable gas from entering such spaces (protection by overpressure as per [4.3.2], airlock as per [4.3.3] or gastight door as detailed in item 11). This item does not cover areas adjacent to ventilation inlets and outlets which are covered by item 4.	Zone 1
8	Air space between the fuel piping and the wall of the outer pipe or duct of double walled fuel piping as per [3.4.6]	Zone 1
9	Spaces adjacent to fuel tanks including cofferdams required in [3.2.4]	Zone 1
10	Areas on open deck within 1,5 m of fuel tank surfaces exposed to the weather **(2)**	Zone 1
11	Enclosed or semi-enclosed spaces having a direct opening into any of the spaces as identified in item 2 or item 3, which are separated from such space by a self-closing, substantially gastight, steel door without holding back arrangement. This item does not cover areas adjacent to ventilation inlets and outlets which are covered by item 4.	Zone 2
12	Spaces forming an airlock as defined in [4.3.3]	Zone 2
13	Areas of 1,5 m surrounding open or semi-enclosed spaces of zone 1	Zone 2
(1)	Drainage tanks as defined in [3.5.2], scuppers and discharges as defined in [3.5.1] and overflow tanks are covered by this item.	
(2)	In the case of double wall tanks, this hazardous area may be omitted provided the secondary barrier of the tank is able to contain any leakage from the tank and remain gastight.	

4.4 Ventilation of hazardous spaces

4.4.1 Hazardous spaces are to be fitted with extraction-type mechanical ventilation capable of providing at least 6 air changes per hour.

4.4.2 Ventilation

Enclosed hangar facilities or enclosed spaces containing refuelling installations are to be provided with mechanical ventilation as required by Ch 4, Sec 13, [2] for closed ro-ro spaces of cargo ships. Ventilation fans are to be of a non-sparking type (see Ch 4, Sec 1, [2.33]).

4.4.3 Filling stations, refuelling stations, fuel pump rooms and storage holds are to be fitted with mechanical ventilation of the extraction type, capable of providing at least 15 air changes per hour. A reduced rate of mechanical ventilation capacity may be considered for such spaces when they are of a semi-enclosed type.

4.4.4 Any loss of the ventilating capacity required in [4.4.1] or [4.4.3] is to trigger a visual alarm at the entrance door of the considered space, an audible alarm inside the space and at the navigation bridge.

4.4.5 Arrangements are to be provided to permit rapid shutdown and effective closure of the ventilation system from outside of the space in case of fire, taking into account the weather and sea conditions. It is to be possible to shut-off the ventilation of each compartment separately.

4.4.6 The fans are to be non-sparking.

4.4.7 Electrical equipment and wiring, if installed in an exhaust ventilation duct, are to be of a type approved for use in explosive petrol and air mixtures.

4.4.8 *Electric motors driving fans of the ventilation systems of hazardous spaces are to be located outside of the ventilation ducting unless they are of a certified safe type.*

4.4.9 Ducting used for the ventilation of hazardous spaces is to be separate from that used for the ventilation of non-hazardous spaces

4.4.10 Air inlets for hazardous enclosed spaces are to be taken from areas which, in the absence of the considered inlet, would be non-hazardous.

4.4.11 Air outlets for hazardous enclosed spaces are to be located in an open area which, in the absence of the considered outlet, would be of the same or lesser hazard than the ventilated space.

4.5 Ventilation and door openings of non-hazardous spaces

4.5.1 Air inlets and door openings for non-hazardous enclosed spaces are to be taken from non-hazardous areas at least 1.5m from the limits of any hazardous area. Where the inlet duct passes through a hazardous area, the inlet duct is to have over-pressure in relation to this area unless the mechanical integrity and gas-tightness of the duct is considered by the Society to be such that no pressure differential is required to ensure that gases will not leak into the duct.

4.5.2 Air outlets from non-hazardous enclosed spaces are to be located in a non-hazardous open area.

4.5.3 Air outlets from high fire risk spaces are to be located at least 3 m away from fuel tanks, filling stations or refuelling stations located on the open deck or in semi-enclosed spaces.

Note 1: "High fire risk spaces" means machinery spaces of category A, ro-ro spaces, cargo holds where fixed fire-fighting systems are required (See Ch 4, Sec 6, [6.1]),galleys, pantries containing cooking appliances, laundry with drying equipment, spaces where oxygen is stored or produced, spaces in which flammable liquids or gases are stored, battery rooms and workshops.

Section 12 Carriage of Dangerous Goods

1 General requirements

1.1 Application

1.1.1 *In addition to complying with the requirements of the other Sections of this Chapter, as appropriate, ship types and cargo spaces, referred to in [1.1.2], intended for the carriage of dangerous goods shall comply with the requirements of this Section, as appropriate, except when carrying dangerous goods in limited quantities and excepted quantities unless such requirements have already been met by compliance with the requirements elsewhere in this Chapter. The types of ships and modes of carriage of dangerous goods are referred to in [1.1.2] and in Tab 1, where the items of the list in [1.1.2] are referred to in the head of table. Cargo ships of less than 500 gross tonnage shall comply with this Section, but the Society may reduce the requirements and such reduced requirements shall be recorded in the document of compliance referred to in IMO Circular MSC.1/Circ.1266.*

Note 1: "limited quantities" as per the IMO "International Maritime Dangerous Goods Code" (IMDG Code).

1.1.2 *The following ship types and cargo spaces shall govern the application of Tab 1 and Tab 2:*

a) *Ships and cargo spaces not specifically designed for the carriage of freight containers, but intended for the carriage of dangerous goods in packaged form, including goods in freight containers and portable tanks*

b) *Purpose-built container ships and cargo spaces intended for the carriage of dangerous goods in freight containers and portable tanks* (see Note 1)

c) *Ro-ro ships and ro-ro spaces intended for the carriage of dangerous goods* (see Note 2)

d) *Ships and cargo spaces intended for the carriage of solid dangerous goods in bulk, and*

e) *Ships and cargo spaces intended for carriage of dangerous goods other than liquids and gases in bulk in shipborne barges.*

Note 1: A purpose-built container space is a cargo space fitted with cell guides for stowage and securing of containers.

Note 2: Ro-ro spaces include special category spaces and vehicle spaces.

2 Special requirements

2.1 General

2.1.1 *Unless otherwise specified, the following requirements shall govern the application of Tab 1, Tab 2 and Tab 3 to both "on-deck" and "under-deck" stowage of dangerous goods where the numbers of following subarticles [2.2] to [2.11] are indicated in the first column of the tables.*

2.2 Water supplies

2.2.1 *Arrangements shall be made to ensure immediate availability of a supply of water from the fire main at the required pressure either by permanent pressurisation or by suitably placed remote arrangements for the fire pumps.*

2.2.2 *The quantity of water delivered shall be capable of supplying four nozzles of a size and at pressures as specified in Ch 4, Sec 6, [1.2.6], capable of being trained on any part of the cargo space when empty. This amount of water may be applied by equivalent means to the satisfaction of the Society.*

Note 1: The number and position of hydrants should be such that at least two of the required four jets of water, when supplied by single lengths of hose, may reach any part of the cargo space when empty; and all four jets of water, each supplied by single lengths of hose may reach any part of ro-ro cargo spaces.

2.2.3 *Means shall be provided for effectively cooling the designated under-deck cargo space by at least 5 l/min per square metre of the horizontal area of cargo spaces, either by a fixed arrangement of spraying nozzles or by flooding the cargo space with water. Hoses may be used for this purpose in small cargo spaces and in small areas of larger cargo spaces at the discretion of the Society. However, the drainage and pumping arrangements shall be such as to prevent the build-up of free surfaces. The drainage system shall be sized to remove no less than 125% of the combined capacity of both the water spraying system pumps and the required number of fire hose nozzles. The drainage system valves shall be operable from outside the protected space at a position in the vicinity of the extinguishing system controls. Bilge wells shall be of sufficient holding capacity and shall be arranged at the side shell of the ship at a distance from each other of not more than 40 m in each watertight compartment. If this is not possible, the adverse effect upon stability of the added weight and free surface of water shall be taken into account to the extent deemed necessary by the Society in its approval of the stability information.*

Table 1 : Application of the requirements to different modes of carriage of dangerous goods in ships and cargo spaces

Requirements of Article [2]	Requirement [1.1.2]						
	Weather decks a) to e) inclusive	a)	b)	c)		d)	e)
		Not specifically designed	Container cargo spaces	Closed ro-ro spaces **(5)**	Open ro-ro spaces	Solid dangerous goods in bulk	Shipborne barges
[2.2.1]	x	x	x	x	x	For application of requirements of Ch 4, Sec 12 to different classes of dangerous goods, see Tab 2	x
[2.2.2]	x	x	x	x	x		–
[2.2.3]	–	x	x	x	x		x
[2.2.4]	–	x	x	x	x		x
[2.3]	–	x	x	x	x		x **(4)**
[2.4]	–	x	x	x	–		x **(4)**
[2.5.1]	–	x	x **(1)**	x	–		x **(4)**
[2.5.2]	–	x	x **(1)**	x	–		x **(4)**
[2.6]	–	x	x **(1)**	x	–		–
[2.7.1]	x	x	x	x	x		–
[2.7.3]	x	x	x	x	x		–
[2.8]	x	x	–	–	x		–
[2.9]	x	x	x **(2)**	x	x		–
[2.10]	–	–	–	x **(3)**	x		–
[2.11.1]	–	–	–	x	–		–
[2.11.2]	–	–	–	x	–		–

x : Where "x" appears in the Table, it means that this requirement is applicable to all classes of dangerous goods as given in the appropriate line of Tab 3, except as indicated by the following notes.

(1) For classes 4 and 5.1 solids, not applicable to closed freight containers. For classes 2, 3, 6.1 and 8 when carried in closed freight containers, the ventilation rate may be reduced to not less than two air changes per hour. For classes 4 and 5.1 liquids when carried in closed freight containers, the ventilation rate may be reduced to not less than two air changes per hour.
For the purpose of this requirement, a portable tank is a closed freight container.

(2) Applicable to decks only.

(3) Applies only to closed ro-ro spaces, not capable of being sealed.

(4) In the special case where the barges are capable of containing flammable vapours or, alternatively, if they are capable of discharging flammable vapours to a safe space outside the barge carrier compartment by means of ventilation ducts connected to the barges, these requirements may be reduced or waived to the satisfaction of the Society.

(5) Special category spaces shall be treated as closed ro-ro spaces when dangerous goods are carried.

Table 2 : Application of the requirements to different classes of dangerous goods for ships and cargo spaces carrying solid dangerous goods in bulk

Requirements of Article [2]	Class						
	4.1	4.2	4.3 **(1)**	5.1	6.1	8	9
[2.2.1]	x	x	–	x	–	–	x
[2.2.2]	x	x	–	x	–	–	x
[2.3]	x	x **(2)**	x	x **(3)**	–	–	x **(3)**
[2.5.1]	–	x **(2)**	x	–	–	–	–
[2.5.2]	x **(4)**	x **(2)**	x	x **(2) (4)**	–	–	x **(2) (4)**
[2.5.3]	x	x	x	x	x	x	x
[2.7]	x	x	x	x	x	x	x
[2.9]	x	x	x	x **(2)**	–	–	x **(5)**

(1) The hazards of substances in this class which may be carried in bulk are such that special consideration shall be given by the Society to the construction and equipment of the ship involved in addition to meeting the requirements enumerated in this Table.

(2) Only applicable to Seedcake containing solvent extractions, to Ammonium nitrate and to Ammonium nitrate fertilizers.

(3) Only applicable to Ammonium nitrate and to Ammonium nitrate fertilizers. However, a degree of protection in accordance with standards contained in the "International Electrotechnical Commission, publication 60079 - Electrical Apparatus for Explosive Gas Atmospheres" is sufficient.

(4) Only suitable wire mesh guards are required.

(5) The requirements of the "International Maritime Solid Bulk Cargoes (IMSBC) Code", as amended, are sufficient.

Table 3 : Application of the requirements to different classes of dangerous goods except solid dangerous goods in bulk

Requirements of Article [2]	Class																						
	1	2	3	4	5	6	7	8	9	10	11	12	13	14	15	16	17	18	19	20	21	22	23
	1.1 to 1.6	1.4S	2.1	2.2	2.3 flammable **(10)**	2.3 non-flammable	3 FP **(5)** < 23°C	3 23°C ≤ FP **(5)** ≤ 60°C	4.1	4.2	4.3 liquids **(11)**	4.3 solids	5.1	5.2 **(6)**	6.1 liquids	6.1 liquids FP **(5)** < 23°C	6.1 liquids 23°C ≤ FP **(5)** ≤ 60°C	6.1 solids	8 liquids	8 liquids FP **(5)** < 23°C	8 liquids 23°C ≤ FP **(5)** ≤ 60°C	8 solids	9
[2.2.1]	x	x	x	x	x	x	x	x	x	x	x	x	x	x	x	x	x	x	x	x	x	x	x
[2.2.2]	x	x	x	x	x	x	x	x	x	x	x	x	x	x	x	x	x	x	x	x	x	x	–
[2.2.3]	x	–	–	–	–	–	–	–	–	–	–	–	–	–	–	–	–	–	–	–	–	–	–
[2.2.4]	x	–	–	–	–	–	–	–	–	–	–	–	–	–	–	–	–	–	–	–	–	–	–
[2.3]	x	–	x	–	x	–	x	–	–	–	x **(8)**	–	–	–	–	x	–	–	–	x	–	–	x **(7)**
[2.4]	x	x	x	x	–	x	x	x	x	x	x	x	x	–	x	x	x	x	x	x	x	x	–
[2.5.1]	–	–	x	–	–	x	x	–	x **(1)**	x **(1)**	x	x	x **(1)**	–	–	x	x	x **(1)**	–	x	x	–	x **(1)**
[2.5.2]	–	–	x	–	–	–	x	–	–	–	–	–	–	–	–	x	–	–	–	x	–	–	x **(7)**
[2.6]	–	–	–	–	–	–	x	–	–	–	–	–	–	–	x	x	x	–	x **(9)**	x	x **(9)**	–	–
[2.7]	–	–	x	x	x	x	x	x	x	x	x	x	x	x	x	x	x	x	x	x	x	x	x **(4)**
[2.8]	–	–	–	–	–	–	x	x	x	x	x	x	x	–	–	x	x	–	–	x	x	–	–
[2.9]	x **(2)**	–	x	x	x	x	x	x	x	x	x	x	x **(3)**	x	–	x	x	–	–	x	x	–	–
[2.10]	x	x	x	x	x	x	x	x	x	x	x	x	x	x	x	x	x	x	x	x	x	x	x
[2.11.1]	x	x	x	x	x	x	x	x	x	x	x	x	x	x	x	x	x	x	x	x	x	x	x
[2.11.2]	x	x	x	x	x	x	x	x	x	x	x	x	x	x	x	x	x	x	x	x	x	x	x

(1) When "mechanically-ventilated spaces" are required by the IMDG Code.
(2) Stow 3 m horizontally away from the machinery space boundaries in all cases.
(3) Refer to the IMDG Code.
(4) As appropriate for the goods to be carried.
(5) FP means flashpoint.
(6) Under the provisions of the IMDG Code, stowage of class 5.2 dangerous goods under deck or in enclosed ro-ro spaces is prohibited.
(7) Only applicable to dangerous goods evolving flammable vapour listed in the IMDG Code.
(8) Only applicable to dangerous goods having a flashpoint < 23ºC listed in the IMDG Code.
(9) Only applicable to dangerous goods having a subsidiary risk class 6.1.
(10) Under the provisions of the IMDG Code, stowage of class 2.3 having subsidiary risk class 2.1 under deck or in enclosed ro-ro spaces is prohibited.
(11) Under the provisions of the IMDG Code, stowage of class 4.3 liquids having a flashpoint < 23ºC under deck or in enclosed ro-ro spaces is prohibited.

2.2.4 *Provision to flood a designated under-deck cargo space with suitable specified media may be substituted for the requirements in [2.2.3].*

A high expansion foam system complying with Ch 4, Sec 15 is acceptable unless cargoes react dangerously with water (see the IMO "International Maritime Dangerous Goods Code").

2.2.5 *The total required capacity of the water supply shall satisfy the requirements of [2.2.2] and [2.2.3], if applicable, simultaneously calculated for the largest designed cargo space. The capacity requirements of [2.2.2] shall be met by the total capacity of the main fire pump(s), not including the capacity of the emergency fire pump, if fitted. If a drencher system is used to satisfy the requirements of [2.2.3], the drencher pump shall also be taken into account in this total capacity calculation.*

2.3 Sources of ignition

2.3.1 *Electrical equipment and wiring shall not be fitted in enclosed cargo spaces or vehicle spaces unless it is essential for operational purposes in the opinion of the Society. However, if electrical equipment is fitted in such spaces, it shall be of a certified safe type for use in the dangerous environments to which it may be exposed unless it is possible to completely isolate the electrical system (e.g. by removal of links in the system, other than fuses). Cable penetrations of the decks and bulkheads shall be sealed against the passage of gas or vapour. Through runs of cables and cables within the cargo spaces shall be protected against damage from impact. Any other equipment which may constitute a source of ignition of flammable vapour shall not be permitted.*

2.3.2 The hazardous areas are to be defined in accordance with IEC 60092-506 standard, Special features - Ships carrying specific dangerous goods and materials hazardous only in bulk.

2.3.3 In addition, when carrying flammable liquids having flashpoints less than 23°C as Class 3, 6.1 or 8 in cargo spaces, the bilge pipes with flanges, valves, pumps, etc. constitute a source of release and the enclosing spaces (e.g. pipe tunnels, bilge pump rooms, etc.) are to be classified as an extended hazardous area (comparable with Zone 2) unless these spaces are continuously mechanically ventilated with a capacity for at least six air changes per hour.

Except where the space is protected with redundant mechanical ventilation capable of starting automatically, equipment not certified for Zone 2 are to be automatically disconnected following loss of ventilation while essential systems such as bilge and ballast systems are to be certified for Zone 2.

Where redundant mechanical ventilation is employed, equipment and essential systems not certified for Zone 2 shall be interlocked so as to prevent inadvertent operation if the ventilation is not operational. Audible and visible alarms shall be provided at a manned station if failure occurs.

2.3.4 For pipes having open ends (e.g. ventilation and bilge pipes, etc.) in a hazardous area, the pipe itself is to be classified as hazardous area.

2.4 Detection system

2.4.1 *Ro-ro spaces shall be fitted with a fixed fire detection and fire alarm system complying with the requirements of Ch 4, Sec 15. All other types of cargo spaces shall be fitted with either a fixed fire detection and fire alarm system or a sample extraction smoke detection system complying with the requirements of Ch 4, Sec 15. If a sample extraction smoke detection system is fitted, particular attention shall be given to item c) of Ch 4, Sec 15, [9.1.1] in order to prevent the leakage of toxic fumes into occupied areas.*

2.5 Ventilation arrangement

2.5.1 *Adequate power ventilation shall be provided in enclosed cargo spaces. The arrangement shall be such as to provide for at least six air changes per hour in the cargo space, based on an empty cargo space, and for removal of vapours from the upper or lower parts of the cargo space, as appropriate.*

2.5.2 *The fans shall be such as to avoid the possibility of ignition of flammable gas/air mixtures. Suitable wire mesh guards shall be fitted over inlet and outlet ventilation openings.*

Exhaust fans are to be of non-sparking type.

Note 1: The purpose of "suitable wire mesh guards" is to prevent foreign objects from entering into the fan casing. The standard wire mesh guards should have a size of 13 mm x 13 mm.

2.5.3 *Natural ventilation shall be provided in enclosed cargo spaces intended for the carriage of solid dangerous goods in bulk, where there is no provision for mechanical ventilation.*

2.5.4 If adjacent spaces are not separated from cargo spaces by gastight bulkheads or decks, then they should be considered as part of the enclosed cargo space and the ventilation requirements should apply to the adjacent space as for the enclosed cargo space itself.

For open-top container ships, power ventilation should be required only for the lower part of the cargo hold for which purpose ducting is required. The ventilation capacity should be at least two air changes per hour, based on the empty hold volume below weather deck.

Note 1: Additional requirements are given in the IMO Circular MSC.1/Circ.1120, for cargoes liable to give off vapours or gases which can form an explosive mixture with air and for cargoes liable to spontaneous combustion.

2.6 Bilge pumping

2.6.1 *Where it is intended to carry flammable or toxic liquids in enclosed cargo spaces, the bilge pumping system shall be designed to protect against inadvertent pumping of such liquids through machinery space piping or pumps. Where large quantities of such liquids are carried, consideration shall be given to the provision of additional means of draining those cargo spaces.* These means shall be to the satisfaction of the Society.

2.6.2 Cargo spaces intended for carriage of flammable liquids with flashpoint less than 23°C or toxic liquids are to be fitted with a fixed bilge drainage system independent of or separated from the bilge system in the machinery space and located outside such space.

If a single bilge drainage system completely independent of the machinery space is provided, the system is to comply with the requirements of Ch 1, Sec 10.

For open top container holds, bilge systems for cargo holds should be independent of the machinery space bilge system and be located outside of the machinery space.

2.6.3 *If the bilge drainage system is additional to the system served by pumps in the machinery space, the capacity of the system shall be not less than 10 m^3/h per cargo space served. If the additional system is common, the capacity need not exceed 25 m^3/h. The additional bilge system need not be arranged with redundancy.*

2.6.4 *Whenever flammable* liquids with flashpoint less than 23°C *or toxic liquids are carried, the bilge line into the machinery space shall be isolated either by fitting a blank flange or by a closed lockable valve.*

2.6.5 *Enclosed spaces outside machinery spaces containing bilge pumps serving cargo spaces intended for carriage of flammable or toxic liquids shall be fitted with separate mechanical ventilation giving at least 6 air changes per hour.* Electrical equipment in the space is to be in accordance with Part C, Chapter 2. *If the space has access from another enclosed space, the door shall be self-closing.*

The reduced air changes per hour as per Note 1 of Tab 1 also apply when the bilge pump is located directly inside a container cargo space. In case several container cargo spaces are served by the same bilge pump, the bilge pump is to be installed in the container cargo hold with the highest ventilation rate, compared to the other container cargo spaces.

2.6.6 Bilge drainage pipes are not to pass through the engine room unless they are made of steel with reinforced thickness as per Ch 1, Sec 10, Tab 6 and are joined only by welding.

2.6.7 *If bilge drainage of cargo spaces is arranged by gravity drainage, the drainage shall be either led directly overboard or to a closed drain tank located outside the machinery spaces. The tank shall be provided with a vent pipe to a safe location on the open deck. Drainage from a cargo space into bilge wells in a lower space is only permitted if that space satisfies the same requirements as the cargo space above.*

2.7 Personnel protection

2.7.1 *Four sets of full protective clothing, resistant to chemical attack, shall be provided in addition to the fire-fighter's outfits required by* SOLAS, chapter II-2, *regulation 10.10 and shall be selected taking into account the hazards associated with the chemicals being transported and the standards developed by IMO according to the class and physical state. The protective clothing shall cover all skin, so that no part of the body is unprotected.*

2.7.2 The required protective clothing, required in [2.7.1], is for emergency purposes.

For solid bulk cargoes the protective clothing is to satisfy the equipment requirements specified in Appendix 1 of the IMSBC Code for the individual substances. For packaged goods the protective clothing is to satisfy the equipment requirements specified in emergency procedures (EmS) of the Supplement to IMDG Code for the individual substances.

2.7.3 *At least two self-contained breathing apparatuses additional to those required by* SOLAS, chapter II-2, *regulation 10 shall be provided. Two spare charges suitable for use with the breathing apparatus shall be provided for each required apparatus. Passenger ships carrying not more than 36 passengers and cargo ships that are equipped with suitably located means for fully recharging the air cylinders free from contamination need carry only one spare charge for each required apparatus.*

2.7.4 For each of the breathing apparatuses required in [2.7.3], two complete sets of air bottles are required. These spare bottles are to be in addition to the spare bottles required for fire-fighter's outfit.

2.8 Portable fire extinguishers

2.8.1 *Portable fire extinguishers with a total capacity of at least 12 kg of dry powder or equivalent shall be provided for the cargo spaces. These extinguishers shall be in addition to any portable fire extinguishers required elsewhere in this Chapter.*

2.9 Insulation of machinery space boundaries

2.9.1 *Bulkheads forming boundaries between cargo spaces and machinery spaces of category A shall be insulated to A-60 class standard, unless the dangerous goods are stowed at least 3 m horizontally away from such bulkheads. Other boundaries between such spaces shall be insulated to A-60 class standard.*

2.9.2 In the case that a closed or semi-closed cargo space is located partly above a machinery space and the deck above the machinery space is not insulated, dangerous goods are prohibited in the whole of that cargo space. If the uninsulated deck above the machinery space is a weather deck, dangerous goods are prohibited only for the portion of the deck located above the machinery space.

2.10 Water-spray system

2.10.1 *Each open ro-ro space having a deck above it and each space deemed to be a closed ro-ro space not capable of being sealed shall be fitted with an approved fixed pressure water-spraying system for manual operation which shall protect all parts of any deck and vehicle platform in the space, except that the Society may permit the use of any other fixed fire-extinguishing system that has been shown by full-scale test to be no less effective. However, the drainage and pumping arrangements shall be such as to prevent the build-up of free surfaces. The drainage system shall be sized to remove no less than 125% of the combined capacity of both the water-spraying system pumps and the required number of fire hose nozzles. The drainage system valves shall be operable from outside the protected space at a position in the vicinity of the extinguishing system controls. Bilge wells shall be of sufficient holding capacity and shall be arranged at the side shell of the ship at a distance from each other of not more than 40 m in each watertight compartment. If this is not possible, the adverse effect upon stability of the added weight and free surface of water shall be taken into account to the extent deemed necessary by the Society in its approval of the stability information.*

2.11 Separation of ro-ro spaces

2.11.1 *In ships having ro-ro spaces, a separation shall be provided between a closed ro-ro space and an adjacent open ro-ro space. The separation shall be such as to minimise the passage of dangerous vapours and liquids between such spaces. Alternatively, such separation need not be provided if the ro-ro space is considered to be a closed cargo space over its entire length and fully complies with the relevant special requirements of this Section.*

2.11.2 *In ships having ro-ro spaces, a separation shall be provided between a closed ro-ro space and the adjacent weather deck. The separation shall be such as to minimise the passage of dangerous vapours and liquids between such spaces. Alternatively, a separation need not be provided if the arrangements of the closed ro-ro spaces are in accordance with those required for the dangerous goods carried on adjacent weather decks.*

Section 13 Protection of Vehicle, Special Category and Ro-ro Spaces

1 General requirements

1.1 Application

1.1.1 *In addition to complying with the requirements of the other Sections of this Chapter, as appropriate, vehicle, special category and ro-ro spaces shall comply with the requirements of the present Section.*

1.1.2 *On all ships, vehicles with fuel in their tanks for their own propulsion may be carried in cargo spaces other than vehicle, special category or ro-ro spaces, provided that all the following conditions are met:*

- *the vehicles do not use their own propulsion within the cargo spaces;*
- *the cargo spaces are in compliance with the appropriate requirements of Ch 4, Sec 12; and*
- *the vehicles are carried in accordance with the IMO IMDG Code.*

1.2 Basic principles for passenger ships

1.2.1 *The basic principle underlying the provisions of this Section is that the main vertical zoning required by Ch 4, Sec 5, [1] may not be practicable in vehicle spaces of passenger ships and, therefore, equivalent protection must be obtained in such spaces on the basis of a horizontal zone concept and by the provision of an efficient fixed fire-extinguishing system. Based on this concept, a horizontal zone for the purpose of this Section may include special category spaces on more than one deck provided that the total overall clear height for vehicles does not exceed 10 m.*

1.2.2 *The basic principle underlying the provisions of [1.2.1] is also applicable to ro-ro spaces.*

1.2.3 *The requirements of ventilation systems, openings in A class divisions and penetrations in A class divisions for maintaining the integrity of vertical zones in this Chapter shall be applied equally to decks and bulkheads forming the boundaries separating horizontal zones from each other and from the remainder of the ship.*

2 Precaution against ignition of flammable vapours in closed vehicle spaces, closed ro-ro spaces and special category spaces

2.1 Ventilation systems

2.1.1 Capacity of ventilation systems

There shall be provided an effective power ventilation system sufficient to give at least the following air changes:

a) Passenger ships:
- *Special category spaces: 10 air changes per hour*
- *Closed ro-ro and vehicle spaces other than special category spaces for ships carrying more than 36 passengers: 10 air changes per hour*
- *Closed ro-ro and vehicle spaces other than special category spaces for ships carrying not more than 36 passengers: 6 air changes per hour*

b) Cargo ships: 6 air changes per hour.

The Society may require an increased number of air changes when vehicles are being loaded and unloaded.

2.1.2 Performance of ventilation systems

a) In passenger ships, the power ventilation system shall be separate from other ventilation systems. The power ventilation system shall be operated to give at least the number of air changes required in [2.1.1] at all times when vehicles are in such spaces, except where an air quality control system in accordance with d) is provided. Ventilation ducts serving such cargo spaces capable of being effectively sealed shall be separated for each such space. The system shall be capable of being controlled from a position outside such spaces.

b) In cargo ships, the ventilation fans shall normally be run continuously and give at least the number of air changes required in [2.1.1] whenever vehicles are on board, except where an air quality control system in accordance with item d) is provided. Where this is impracticable, they shall be operated for a limited period daily as weather permits and in any case for a reasonable period prior to discharge, after which period the ro-ro or vehicle space shall be proved gas-free. One or more

portable combustible gas detecting instruments shall be carried for this purpose. The system shall be entirely separate from other ventilation systems. Ventilation ducts serving ro-ro or vehicle spaces shall be capable of being effectively sealed for each cargo space. The system shall be capable of being controlled from a position outside such spaces.

c) In passenger and cargo ships, *the ventilation system shall be such as to prevent air stratification and the formation of air pockets.*

d) For all ships, where an air quality control system is provided based on the guidelines developed by IMO, the ventilation system may be operated at a decreased number of air changes and/or a decreased amount of ventilation. This relaxation does not apply to spaces to which at least ten air changes per hour is required by [2.2.2] and spaces subject to the requirements of [6] and Sec 11, [2.5.1].

Note 1: Refer to the Revised design guidelines and operational recommendations for ventilation systems in ro-ro cargo spaces (MSC/Circ.1515)

e) Fans are to be of non-sparking type.

2.1.3 Indication of ventilation systems

Means shall be provided on the navigation bridge to indicate any loss of the required ventilating capacity.

2.1.4 Closing appliances and ducts

a) Arrangements shall be provided to permit a rapid shut-down and effective closure of the ventilation system from outside of the space in case of fire, taking into account the weather and sea conditions.

For this purpose, the requirements of either 1) or 2) below are to be complied with:

1) The access routes to the controls for closure of the ventilation system are to be:

- clearly marked and at least 600 mm clear width, and
- provided with a single handrail or wire rope lifeline not less than 10 mm in diameter, supported by stanchions not more than 10 m apart in way of any route which involves traversing a deck exposed to weather, and
- fitted with appropriate means of access (such as ladders or steps) to the closing devices of ventilators located in high positions (i.e. 1,8 m and above).

2) Alternatively, remote closing and position indicator arrangements from the bridge or a fire control station for those ventilator closures is acceptable.

b) Ventilation ducts, including dampers, within a common horizontal zone shall be made of steel. In passenger ships, ventilation ducts that pass through other horizontal zones or machinery spaces shall be A-60 class steel ducts constructed in accordance with Ch 4, Sec 5, [6.3.4], items a) and b).

2.1.5 Permanent openings

Permanent openings in the side plating, the ends or deckhead of the space shall be so situated that a fire in the cargo space does not endanger stowage areas and embarkation stations for survival craft and accommodation spaces, service spaces and control stations in superstructures and deckhouses above the cargo spaces.

2.2 Electrical equipment and wiring

2.2.1 *Except as provided in [2.2.2], electrical equipment and wiring shall be of a type suitable for use in an explosive petrol and air mixture.*

Electrical installations in vehicle, special category and ro-ro spaces are to comply with the requirements of Pt D, Ch 1, Sec 4 or Pt D, Ch 12, Sec 4 as applicable.

2.2.2 *In case of other than special category spaces below the bulkhead deck, notwithstanding the provisions in [2.2.1], above a height of 450 mm from the deck and from each platform of vehicles, if fitted, except platforms with openings of sufficient size permitting penetration of petrol gases downwards, electrical equipment of a type so enclosed and protected as to prevent the escape of sparks shall be permitted as an alternative, on condition that the ventilation system is so designed and operated as to provide continuous ventilation of the cargo spaces at the rate of at least ten air changes per hour whenever vehicles are on board.*

2.3 Electrical equipment and wiring in exhaust ventilation ducts

2.3.1 *Electrical equipment and wiring, if installed in an exhaust ventilation duct, shall be of a type approved for use in explosive petrol and air mixtures and the outlet from any exhaust duct shall be sited in a safe position, having regard to other possible sources of ignition.*

2.4 Other ignition sources

2.4.1 *Other equipment which may constitute a source of ignition of flammable vapours shall not be permitted.*

2.5 Scuppers and discharges

2.5.1 *Scuppers shall not be led to machinery or other spaces where sources of ignition may be present.*

3 Detection and alarm

3.1 Fixed fire detection and fire alarm systems

3.1.1 *There shall be provided a fixed fire detection and fire alarm system complying with the requirements of Ch 4, Sec 15. The fixed fire detection system shall be capable of rapidly detecting the onset of fire. The type of detectors and their spacing and location shall be to the satisfaction of the Society, taking into account the effects of ventilation and other relevant factors. After being installed, the system shall be tested under normal ventilation conditions and shall give an overall response time to the satisfaction of the Society.*

Fire detectors are to be smoke detectors.

3.2 Sample extraction smoke detection systems

3.2.1 *Except open ro-ro spaces, open vehicle spaces and special category spaces, a sample extraction smoke detection system complying with the requirements of Ch 4, Sec 15 may be used as an alternative for the fixed fire detection and fire alarm system required in [3.1].*

3.3 Special category spaces

3.3.1 *Manually operated call points shall be spaced so that no part of the space is more than 20 m from a manually operated call point, and one shall be placed close to each exit from such spaces.*

4 Structural protection

4.1 General

4.1.1 *Notwithstanding the provisions of Ch 4, Sec 5, [1.3], in passenger ships carrying more than 36 passengers, the boundary bulkheads and decks of special category spaces and ro-ro spaces shall be insulated to A-60 class standard. However, where a category (5), (9) or (10) space, as defined in Ch 4, Sec 5, [1.3.3] is on one side of the division, the standard may be reduced to A-0. Where fuel oil tanks are below a special category space or a ro-ro space, the integrity of the deck between such spaces may be reduced to A-0 standard.*

5 Fire extinction

5.1 Fixed fire-extinguishing systems

5.1.1 *Vehicle spaces and ro-ro spaces, which are not special category spaces and are capable of being sealed from a location outside of the cargo spaces, shall be fitted with one of the following fixed fire-extinguishing systems:*

a) a fixed gas fire-extinguishing system complying with the provisions of Ch 4, Sec 15

b) a fixed high-expansion foam fire-extinguishing system complying with the provisions of Ch 4, Sec 15; or

c) a fixed water-based fire fighting system for ro-ro spaces and special category spaces complying with the provisions of Ch 4, Sec 15.

5.1.2 *Vehicle spaces and ro-ro spaces not capable of being sealed and special category spaces shall be fitted with a fixed water-based fire-fighting system for ro-ro spaces and special category spaces complying with the provisions of Ch 4, Sec 15, which shall protect all parts of any deck and vehicle platform in such spaces.*

Such a water-based fire-fighting system shall have:

- *a pressure gauge on the valve manifold*
- *clear marking on each manifold valve indicating the spaces served*
- *instructions for maintenance and operation located in the valve room; and*
- *a sufficient number of drainage valves to ensure complete drainage of the system.*

5.1.3 *The Society may permit the use of any other fixed fire-extinguishing system that has been shown, by a full-scale test in conditions simulating a flowing petrol fire in a vehicle space or a ro-ro space, to be not less effective in controlling fires likely to occur in such a space.*

5.2 Portable fire extinguishers

5.2.1 *Portable fire extinguishers shall be provided at each deck level in each hold or compartment where vehicles are carried, spaced not more than 20 m apart on both sides of the space. At least one portable fire extinguisher shall be located at each access to such a cargo space.*

5.2.2 *In addition to the provision of [5.2.1], the following fire-extinguishing appliances shall be provided in vehicle, ro-ro and special category spaces intended for the carriage of motor vehicles with fuel in their tanks for their own propulsion:*

a) at least three water-fog applicators, and

b) one portable foam applicator unit complying with the provisions of Ch 4, Sec 15, provided that at least two such units are available in the ship for use in such spaces.

6 Vehicle carriers carrying motor vehicles with compressed hydrogen or natural gas in their tanks for their own propulsion

6.1 Spaces intended for carriage of motor vehicles with compressed natural gas in their tanks

6.1.1 Electrical equipment and wiring

All electrical equipment and wiring shall be of a certified safe type for use in an explosive methane and air mixture

Note 1: Refer to the recommendations of the International Electrotechnical Commission, in particular, publication IEC 60079.

6.1.2 Ventilation arrangement

a) Electrical equipment and wiring, if installed in any ventilation duct, shall be of a certified safe type for use in explosive methane and air mixtures.

b) The fans shall be such as to avoid the possibility of ignition of methane and air mixtures. Suitable wire mesh guards shall be fitted over inlet and outlet ventilation openings.

6.1.3 Other ignition sources

Other equipment which may constitute a source of ignition of methane and air mixtures shall not be permitted.

6.2 Spaces intended for carriage of motor vehicles with compressed hydrogen in their tanks

6.2.1 Electrical equipment and wiring

All electrical equipment and wiring shall be of a certified safe type for use in an explosive hydrogen and air mixture

Note 1: Refer to the recommendations of the International Electrotechnical Commission, in particular, publication IEC 60079.

6.2.2 Ventilation arrangement

a) Electrical equipment and wiring, if installed in any ventilation duct, shall be of a certified safe type for use in explosive hydrogen and air mixtures and the outlet from any exhaust duct shall be sited in a safe position, having regard to other possible sources of ignition.

b) The fans shall be designed such as to avoid the possibility of ignition of hydrogen and air mixtures. Suitable wire mesh guards shall be fitted over inlet and outlet ventilation openings.

6.2.3 Other ignition sources

Other equipment which may constitute a source of ignition of hydrogen and air mixtures shall not be permitted.

6.3 Detection

6.3.1 *When a vehicle carrier carries as cargo one or more motor vehicles with either compressed hydrogen or compressed natural gas in their tanks for their own propulsion, at least two portable gas detectors shall be provided. Such detectors shall be suitable for the detection of the gas fuel and be of a certified safe type for use in the explosive gas and air mixture.*

Section 14 Safety Centre on Passenger Ships

1 General

1.1 Application

1.1.1 *Passenger ships shall have on board a safety centre complying with the requirements of this Section.*

1.2 Location and arrangement

1.2.1 *The safety centre shall either be a part of the navigation bridge or be located in a separate space adjacent to and having direct access to the navigation bridge, so that the management of emergencies can be performed without distracting watch officers from their navigational duties.*

2 Layout and ergonomic design

2.1

2.1.1 *The layout and ergonomic design of the safety centre shall take into account the guidelines* laid down in MSC.1/Circ.1368.

3 Communications

3.1

3.1.1 *Means of communication between the safety centre, the central control station, the navigation bridge, the engine control room, the storage room(s) for fire extinguishing system(s) and fire equipment lockers shall be provided.*

4 Control and monitoring of safety systems

4.1

4.1.1 *Notwithstanding the requirements set out elsewhere in the* Rules*, the full functionality (operation, control, monitoring or any combination thereof, as required) of the safety systems listed below shall be available from the safety centre:*

a) all powered ventilation systems

b) fire doors

c) general emergency alarm system

d) public address system

e) electrically powered evacuation guidance systems

f) watertight and semi-watertight doors

g) indicators for shell doors, loading doors and other closing appliances

h) water leakage of inner/outer bow doors, stern doors and any other shell door

i) television surveillance system

j) fire detection and alarm system

k) fixed fire-fighting local application system(s)

l) sprinkler and equivalent systems

m) water-based systems for machinery spaces

n) alarm to summon the crew

o) atrium smoke extraction system

p) flooding detection systems; and

q) fire pumps and emergency fire pumps.

Section 15 Fire Safety Systems

1 General

1.1 Application

1.1.1 This Section applies to fire safety systems as referred to in the Rules

1.1.2 Piping systems included in fire safety systems covered by this Section are to comply with the requirements of Ch 1, Sec 10, unless otherwise specified in the present Section.

1.1.3 Pressure vessels included in fire safety systems covered by this Section are to comply with the requirements of Ch 1, Sec 3, unless otherwise specified in the present Section.

1.2 Use of toxic extinguishing media

1.2.1 *The use of a fire-extinguishing medium which, in the opinion of the Society, either by itself or under expected conditions of use gives off toxic gases, liquids and other substances in such quantities as to endanger persons shall not be permitted.*

2 International shore connections

2.1 Engineering specifications

2.1.1 Standard dimensions

Standard dimensions of flanges for the international shore connection shall be in accordance with Tab 1.

Table 1 : Standard dimensions of flanges for the international shore connection

Description	Dimension
Outside diameter	178 mm
Inside diameter	64 mm
Bolt circle diameter	132 mm
Slots in flange	4 holes, 19 mm in diameter spaced equidistantly on a bolt circle of the above diameter, slotted to the flange periphery
Flange thickness	14,5 mm minimum
Bolts and nuts	4, each of 16 mm diameter, 50 mm in length

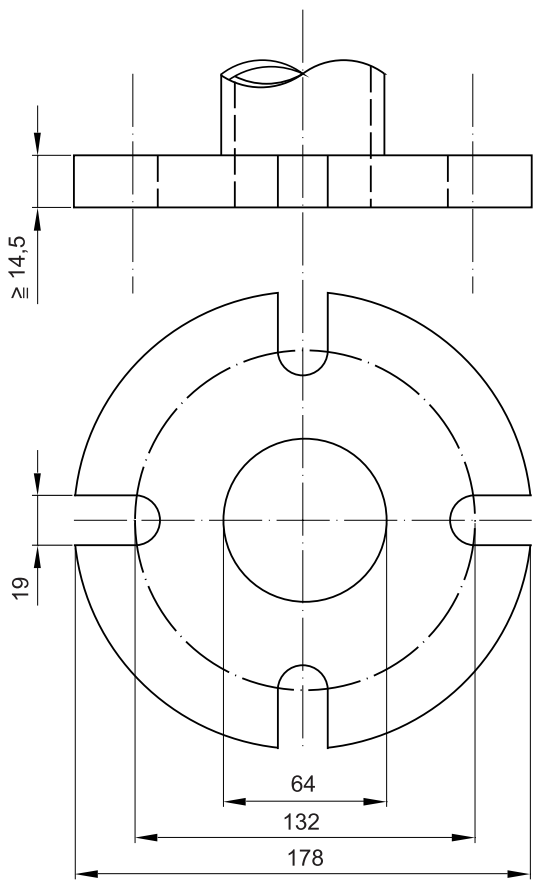

2.1.2 Materials and accessories

International shore connections shall be of steel or other equivalent material and shall be designed for 1,0 N/mm² services. The flange shall have a flat face on one side and, on the other side, it shall be permanently attached to a coupling that will fit the ship's hydrant and hose. The connection shall be kept aboard the ship together with a gasket of any material suitable for 1,0 N/mm² services, together with four bolts of 16 mm diameter and 50 mm in length, four 16 mm nuts and eight washers.

3 Fire extinguishers

3.1 Type approval

3.1.1 *All fire extinguishers shall be of approved types and designs.*

3.2 Engineering specifications

3.2.1 Fire extinguisher

a) Safety requirements

Fire extinguishers containing an extinguishing medium which, in the opinion of the Society, either by itself or under the expected conditions of use gives off toxic gases in such quantities as to endanger persons or which is an ozone depleting substance shall not be permitted.

b) Quantity of medium

1) Each powder or carbon dioxide extinguisher shall have a capacity of at least 5 kg and each foam extinguisher shall have a capacity of at least 9 l. The mass of all portable fire extinguishers shall not exceed 23 kg and they shall have a fire-extinguishing capability at least equivalent to that of a 9 l fluid extinguisher.

2) The Society shall determine the equivalents of fire extinguishers.

3.2.2 Portable foam applicators

a) A portable foam applicator unit shall consist of a foam nozzle/branch pipe, either of a self-inducing type or in combination with a separate inductor, capable of being connected to the fire main by a fire hose, together with a portable tank containing at least 20 l of foam concentrate and at least one spare tank of foam concentrate of the same capacity.

b) System performance

1) The nozzle/branch pipe and inductor shall be capable of producing effective foam suitable for extinguishing an oil fire, at a foam solution flow rate of at least 200 l/min at the nominal pressure in the fire main.

2) The foam concentrate shall be approved.

3) The values of the foam expansion and drainage time of the foam produced by the portable foam applicator unit shall not differ more than ± 10% of that determined in item 2).

4) The portable foam applicator unit shall be designed to withstand clogging, ambient temperature changes, vibration, humidity, shock, impact and corrosion normally encountered on ships.

3.2.3 Waterfog applicators

A waterfog applicator might consist of a metal L-shaped pipe, the long limb being about 2 m in length capable of being fitted to a fire hose and the short limb being about 250 mm in length fitted with a fixed water fog nozzle or capable of being fitted with a water-spray nozzle.

4 Fixed gas fire-extinguishing systems

4.1 Engineering specifications

4.1.1 General

a) Fire-extinguishing medium

1) Where the quantity of the fire-extinguishing medium is required to protect more than one space, the quantity of medium available need not be more than the largest quantity required for any one space so protected. The system shall be fitted with normally closed control valves arranged to direct the agent into the appropriate space. Adjacent spaces with independent ventilation systems not separated by at least A-0 class divisions should be considered as the same space.

2) The volume of starting air receivers, converted to free air volume, shall be added to the gross volume of the machinery space when calculating the necessary quantity of the fire-extinguishing medium. Alternatively, a discharge pipe from the safety valves may be fitted and led directly to the open air.

3) Means shall be provided for the crew to safely check the quantity of the fire-extinguishing medium in the containers. It shall not be necessary to move the containers completely from their fixing position for this purpose. For carbon dioxide systems, hanging bars for a weighing device above each bottle row, or other means shall be provided. For other types of extinguishing media, suitable surface indicators may be used.

4) *Containers for the storage of fire-extinguishing medium, piping and associated pressure components shall be designed to pressure codes of practice to the satisfaction of the Society having regard to their locations and maximum ambient temperatures expected in service.*

b) *Installation requirements*

1) *The piping for the distribution of fire-extinguishing medium shall be arranged and discharge nozzles so positioned that a uniform distribution of the medium is obtained. System flow calculations shall be performed using a calculation technique acceptable to the Society.*

In large cargo spaces, at least two distribution pipes are to be provided, one on the fore part, the second at the aft part.

In machinery spaces, the discharge nozzles are to be positioned in the upper and lower parts of these spaces.

2) *Except as otherwise permitted by the Society, pressure containers required for the storage of the fire-extinguishing medium, other than steam, shall be located outside the protected spaces in accordance with Ch 4, Sec 6, [3.3].*

3) The storage of the fire extinguishing medium is not permitted within spaces which may contain air/flammable gas mixtures.

4) *In piping sections where valve arrangements introduce sections of closed piping, such sections shall be fitted with a pressure relief valve and the outlet of the valve shall be led to open deck.*

5) *All discharge piping, fittings and nozzles in the protected spaces shall be constructed of materials having a melting temperature which exceeds 925°C. The piping and associated equipment shall be adequately supported.*

6) *A fitting shall be installed in the discharge piping to permit the air testing as required in [4.1.3], item g)4).*

c) *System control requirements*

1) *The necessary pipes for conveying fire-extinguishing medium into the protected spaces shall be provided with control valves so marked as to indicate clearly the space to which the pipes are led. Suitable provision shall be made to prevent inadvertent release of the medium into the space. Where a cargo space fitted with a gas fire-extinguishing system is used as a passenger space, the gas connection shall be blanked during such use. The pipes may pass through accommodation areas provided that they are of substantial thickness and that their tightness is verified with a pressure test, after their installation, at a pressure head not less than 5 N/mm^2. In addition, pipes passing through accommodation areas shall be joined only by welding and shall not be fitted with drains or other openings within such spaces. The pipes shall not pass through refrigerated spaces.*

Control valves are to be capable of local operation.

The open or closed position of control valves is to be indicated.

Means are to be provided in order to permit the blowing through each branch line of the piping system downstream of the master (control) valves.

2) *Means shall be provided for automatically giving audible and visual warning of the release of fire-extinguishing medium into any ro-ro spaces, container holds equipped with integral reefer containers, spaces accessible by doors or hatches, and other spaces in which personnel normally work or to which they have access. The audible alarms shall be located so as to be audible throughout the protected space with all machinery operating, and the alarms should be distinguished from other audible alarms by adjustment of sound pressure or sound patterns. The pre-discharge alarm shall be automatically activated (e.g. by opening of the release cabinet door). The alarm shall operate for the length of time needed to evacuate the space, but in no case less than 20 seconds before the medium is released.*

Conventional cargo spaces and small spaces (such as compressor rooms, paint lockers, etc.) with only a local release need not be provided with such an alarm. However, ro-ro cargo spaces, holds in container ships equipped for integrated reefer containers and other spaces where personnel can be expected to enter and where the access is therefore facilitated by doors or manway hatches are to be provided with such an alarm.

Where audible alarms are fitted to warn of the release of fire-extinguishing medium into pump rooms, they may be of the pneumatic or electrical type:

- pneumatically operated alarms

  Air operated alarms may be used provided the air supply is clean and dry.

- electrically operated alarms

  When electrically operated alarms are used, the arrangements are to be such that the electrical actuating mechanism is located outside the pump room except where the alarms are certified intrinsically safe.

Electrically operated alarms are to be supplied with power from the main and an emergency source of power. They are to differ from other signals transmitted to the protected space.

3) *The means of control of any fixed gas fire-extinguishing system shall be readily accessible, simple to operate and shall be grouped together in as few locations as possible at positions not likely to be cut off by a fire in a protected space. At each location there shall be clear instructions relating to the operation of the system having regard to the safety of personnel.*

4) *Automatic release of fire-extinguishing medium shall not be permitted, except as permitted by the Society.*

4.1.2 Carbon dioxide systems - General

a) *Quantity of fire-extinguishing medium*

1) *For cargo spaces the quantity of carbon dioxide available shall, unless otherwise provided, be sufficient to give a minimum volume of free gas equal to 30% of the gross volume of the largest cargo space to be protected in the ship.*

2) *For vehicle spaces and ro-ro spaces which are not special category spaces, the quantity of carbon dioxide available shall be at least sufficient to give a minimum volume of free gas equal to 45% of the gross volume of the largest such cargo space which is capable of being sealed, and the arrangements shall be such as to ensure that at least two thirds of the gas required for the relevant space shall be introduced within 10 min. Carbon dioxide systems shall not be used for the protection of special category spaces.*

3) *For machinery spaces the quantity of carbon dioxide carried shall be sufficient to give a minimum volume of free gas equal to the larger of the following volumes, either:*

- *40% of the gross volume of the largest machinery space so protected, the volume to exclude that part of the casing above the level at which the horizontal area of the casing is 40% or less of the horizontal area of the space concerned taken midway between the tank top and the lowest part of the casing, or*
- *35% of the gross volume of the largest machinery space protected, including the casing.*

  In the calculation of 35% of the above-mentioned volume, the net volume of the funnel shall be considered up to a height equal to the whole casing height if the funnel space is in open connection with the machinery space without inter-position of closing means.

4) The percentages specified in item 3) above may be reduced to 35% and 30%, respectively, for cargo ships of less than 2000 gross tonnage.

   In this case, where two or more machinery spaces are not entirely separate, they are to be considered as forming one space.

5) *For the purpose of this item the volume of free carbon dioxide shall be calculated at 0,56 m^3/kg.*

6) *For machinery spaces, the fixed piping system shall be such that 85% of the gas can be discharged into the space within 2 minutes.*

7) *For container and general cargo spaces (primarily intended to carry a variety of cargoes separately secured or packed) the fixed piping system shall be such that at least two thirds of the gas can be discharged into the space within 10 min. For solid bulk cargo spaces the fixed piping system shall be such that at least two thirds of the gas can be discharged into the space within 20 min. The system controls shall be arranged to allow one third, two thirds or the entire quantity of gas to be discharged based on the loading condition of the hold.*

b) *Controls*

1) *Carbon dioxide systems for the protection of ro-ro spaces, container holds equipped with integral reefer containers, spaces accessible by doors or hatches, and other spaces in which personnel normally work or to which they have access shall comply with the following requirements:*

- *two separate controls shall be provided for releasing carbon dioxide into a protected space and to ensure the activation of the alarm. One control shall be used for opening the valve of the piping which conveys the gas into the protected space and a second control shall be used to discharge the gas from its storage containers. Positive means (see Note 1) shall be provided so they can only be operated in that order; and*
- *the two controls shall be located inside a release box clearly identified for the particular space. If the box containing the controls is to be locked, a key to the box shall be in a break-glass-type enclosure conspicuously located adjacent to the box.*

2) The pre-discharge alarm may be activated before the two separate system release controls are operated (e.g. by a micro-switch that activates the pre-discharge alarm upon opening the release cabinet door as per [4.1.1], item c) 2). Therefore, the two separate controls for releasing carbon dioxide into the protected space (i.e. one control to open the valve of the piping which conveys the gas into the protected space and a second control used to discharge the gas from its storage containers) as per item b) 1) above can be independent of the control for activating the alarm.

   A single control for activation of the alarm is sufficient.

Note 1: The "positive means", referred to for the correct sequential operation of the controls, is to be achieved by a mechanical and/or electrical interlock that does not depend on any operational procedure to achieve the correct sequence of operation.

Note 2: The controls requirements detailed in item b) apply to the spaces identified in [4.1.1], item c) 2) to be provided with a pre-discharge alarm.

4.1.3 High-pressure carbon dioxide systems

a) The system is to be designed for an ambient temperature range of 0°C/55°C, as a rule.

b) Containers for the storage of the fire-extinguishing medium are to be designed and tested in accordance with the relevant requirements of Part C, Chapter 1.

c) The filling ratio of carbon dioxide bottles is to be normally 0,67 kg/l, or less, of the total internal volume; however, for bottles to be fitted in ships which are to operate solely outside the tropical zone, the filling ratio may be 0,75 kg/l.

d) Piping and accessories are to generally satisfy the relevant requirements of Part C, Chapter 1.

e) For systems where carbon dioxide is stored at ambient temperature, the thickness of steel pipes is not to be less than the values given in Tab 2.

Slightly smaller thicknesses may be accepted provided they comply with national standards.

The thickness of threaded pipes is to be measured at the bottom of the thread.

f) Pipes are to be appropriately protected against corrosion. Steel pipes are to be, at least, zinc or paint coated, except those fitted in machinery spaces, with the reservation of the Society's acceptance.

g) After mounting onboard, and in complement to tests and inspections at the Manufacturer's workshop, as per requirements of Part C, Chapter 1, carbon dioxide pipes and their accessories are to undergo the following tests:

1) pipe lengths between bottles and master valves:

a hydraulic test, at the workshop or on board, at 128 bar. When the hydraulic test is carried out at the workshop, at least test with inert gas or air, at 7 bar, is to be carried out on board

2) pipe lengths between master valves and nozzles:

a test on board with inert gas or air, at 7 bar

3) master valves:

a hydraulic test at 128 bar

4) a test of the free air flow in all pipes and nozzles; and

5) a functional test of the alarm equipment.

Table 2 : Minimum wall thickness for steel pipes for CO_2 fire-extinguishing systems

External diameter (mm)	Minimum wall thickness (mm)	
	between bottles and master valves	between master valves and nozzles
21,3 - 26,9	3,2	2,6
30,0 - 48,3	4,0	3,2
51,0 - 60,3	4,5	3,6
63,5 - 76,1	5,0	3,6
82,5 - 88,9	5,6	4,0
101,6	6,3	4,0
108,0 - 114,3	7,1	4,5
127,0	8,0	4,5
133,0 - 139,7	8,0	5,0
152,4 - 168,3	8,8	5,6

4.1.4 Low-pressure carbon dioxide systems

When carbon dioxide, instead of being contained in non-refrigerated high pressure bottles, is contained in refrigerated low pressure vessels, in addition to the requirements in [4.1.2] the following are to be complied with.

a) General

Except where different requirements are given in this item, the requirements of [4.1.3] for systems with carbon dioxide contained in high pressure bottles are generally to be complied with.

b) Vessels and associated devices

1) The system control devices and the refrigerating plants are to be located within the same room where the pressure vessels are stored.

2) The rated amount of liquid carbon dioxide is to be stored in vessels under the working pressure in the range of 1,8 MPa to 2,2 MPa. The normal liquid charge in the container is to be limited to provide sufficient vapour space to allow for expansion of the liquid under the maximum storage temperatures that can be obtained corresponding to the setting of the pressure relief valves, but is not to exceed 95% of the volumetric capacity of the container.

3) The vessels are to be designed, constructed and tested in accordance with the requirements of Ch 1, Sec 3. For this purpose the design pressure is to be taken not less than the relief valve setting. In addition, for each vessel, *provision is to be made for:*

- *a pressure gauge*
- *a high pressure alarm: not more than the setting of the relief valve*
- *a low pressure alarm: not less than 1,8 MPa*
- *branch pipes with stop valves for filling the vessel*
- *discharge pipes*
- *a liquid CO_2 level indicator, fitted on the vessel*
- *two safety relief valves arranged so that either valve can be shut off while the other is connected to the vessel. The setting of the relief valves is to be not less than 1,1 times the working pressure. The capacity of each valve is to be such that the vapours generated due to fire can be discharged with a pressure rise not more than 20% above the setting pressure. The discharge from the safety valves is to be led to the open.*

4) *The vessels and outgoing pipes permanently filled with carbon dioxide are to have thermal insulation preventing the operation of the safety valve for 24 hours after de-energising the plant, at ambient temperature of 45°C and an initial pressure equal to the starting pressure of the refrigeration unit.* The insulating materials and their liners are to be to the satisfaction of the Society, bearing in mind, in particular, their fire resistance and mechanical properties, as well as protection against penetration of water vapours.

c) Refrigerating plant

1) *The vessels are to be serviced by two automated completely independent refrigerating units solely intended for this purpose, each comprising a compressor and the associated prime mover, evaporator and condenser.*

2) The refrigerating plant is to comply with the relevant requirements of Ch 1, Sec 16. *The refrigerating capacity and the automatic control of each unit are to be such as to maintain the required temperature under conditions of continuous operation for 24 hours at a sea temperature up to 32°C and ambient air temperature up to 45°C.*

3) In the event of failure of either one of the refrigerating units, the other is to be actuated automatically. Provision is to be made for local manual control of the refrigerating plant.

4) *Each electrical refrigerating unit is to be supplied from the main switchboard busbars by a separate feeder.*

5) *The cooling water supply to the refrigerating plant (where required) is to be provided from at least two circulating pumps, one of which being used as a standby. The standby pump may be a pump used for other services so long as its use for cooling would not interfere with any other essential service of the ship. Cooling water is to be taken from not less than two sea connections, preferably one port and one starboard.*

d) Pipes, valves and associated fittings

1) The pipes, valves and fittings are to be in accordance with the requirements of Ch 1, Sec 10 for a design pressure not less than the design pressure of the CO_2 vessels.

2) *Safety relief devices are to be provided in each section of pipe that may be isolated by block valves and in which there could be a build up of pressure in excess of the design pressure of any of the components.*

3) The piping system is to be designed in such a way that the CO_2 pressure at the nozzles should not be less than 1 Mpa.

e) Control of fire-extinguishing system operation

The machinery alarm system is to be equipped with audible and visual alarms activated when:

1) *the pressure in the vessels reaches the low and the high values according to item b) 2) above*

2) *any one of the refrigerating units fails to operate*

3) *the lowest permissible level of the liquid in the vessels is reached.*

f) Release control

1) The release of CO_2 is to be initiated manually.

2) *If a device is provided which automatically regulates the discharge of the rated quantity of carbon dioxide into the protected spaces, it is also to be possible to regulate the discharge manually.*

3) *If the system serves more than one space, means for control of discharge quantities of CO_2 are to be provided, e.g. automatic timer or accurate level indicators located at the control positions or positions.*

g) Testing

1) The pipes, valves and fittings and assembled system are to be tested to the satisfaction of the Society.

2) The pipes from the vessels to the release valves on the distribution manifold are to be subjected to a pressure test to not less than 1,5 times the set pressure of the safety relief valves.

3) The pipes from the release valves on the distribution manifold to the nozzles are to be tested for tightness and free flow of CO_2, after having been assembled on board.

4) After having been fitted on board, the refrigerating plant is to be checked for its proper operation.

5) If deemed necessary by the Society, a discharge test may be required to check the fulfilment of the requirements of item d) 3) above.

4.2 Equivalent fixed gas fire-extinguishing systems

4.2.1 Fixed gas fire-extinguishing systems equivalent to those specified in [4.1] are to be specially considered by the Society.

4.3 Requirements of steam systems

4.3.1 *The boiler or boilers available for supplying steam are to have an evaporation of at least 1 kg of steam per hour for each 0,75 m³ of the gross volume of the largest space so protected. In addition to complying with the foregoing requirements, the systems in all respects are to be as determined by, and to the satisfaction of, the Society.*

5 Fixed foam fire-extinguishing systems

5.1 General

5.1.1 Application

The Article [5] details the specifications for fixed foam fire-extinguishing systems for:

- the protection of machinery spaces in accordance with Ch 4, Sec 6, [3.1.1], item b)
- cargo spaces in accordance with Ch 4, Sec 6, [6.1.1]
- cargo pump-rooms in accordance with Pt D, Ch 7, Sec 6, [4.2.2], item a) 2) and
- vehicle, special category and ro-ro spaces in accordance with Ch 4, Sec 13, [5.1.1].

This Article does not apply to cargo pump-rooms of chemical tankers carrying liquid cargoes, unless the Society specifically accepts the use of these systems based on additional tests with alcohol-based fuel and alcohol resistant foam.

5.1.2 Definitions

a) Design filling rate *is at least the minimum nominal filling rate used during the approval tests.*

b) Foam *is the extinguishing medium produced when foam solution passes through a foam generator and is mixed with air.*

c) Foam solution *is a solution of foam concentrate and water.*

d) Foam concentrate *is a liquid which, when mixed with water in the appropriate concentration forms a foam solution.*

e) Foam delivery ducts *are supply ducts for introducing high-expansion foam into the protected space from foam generators located outside the protected space.*

f) Foam mixing ratio *is the percentage of foam concentrate mixed with water forming the foam solution.*

g) Foam generators *are discharge devices or assemblies through which high-expansion foam solution is aerated to form foam that is discharged into the protected space. Foam generators using inside air typically consist of a nozzle or set of nozzles and a casing. The casing is typically made of perforated steel/stainless steel plates shaped into a box that enclose the nozzle(s). Foam generators using outside air typically consist of nozzles enclosed within a casing that spray onto a screen. An electric, hydraulic or pneumatically driven fan is provided to aerate the solution.*

h) High-expansion foam fire-extinguishing systems *are fixed total flooding extinguishing systems that use either inside air or outside air for aeration of the foam solution. A high-expansion foam system consists of both the foam generators and the dedicated foam concentrate approved during the fire testing specified in [5.2.1], item c).*

i) Inside air foam system *is a fixed high-expansion foam fire-extinguishing system with foam generators located inside the protected space and drawing air from that space.*

j) Nominal flow rate *is the foam solution flow rate expressed in l/min.*

k) Nominal application rate *is the nominal flow rate per area expressed in l/min/m².*

l) Nominal foam expansion ratio *is the ratio of the volume of foam to the volume of foam solution from which it was made, under non-fire conditions, and at an ambient temperature of e.g. around 20ºC.*

m) Nominal foam production *is the volume of foam produced per time unit, i.e. nominal flow rate times nominal foam expansion ratio, expressed in m^3/min.*

n) Nominal filling rate *is the ratio of nominal foam production to the area, i.e. expressed in m/min.*

o) Nominal filling time *is the ratio of the height of the protected space to the nominal filling rate, i.e. expressed in minutes.*

p) Outside air foam system *is a fixed high-expansion foam system with foam generators installed outside the protected space that are directly supplied with fresh air.*

5.2 Fixed high-expansion foam fire-extinguishing systems

5.2.1 Principal performance

a) The system shall be capable of manual release, and shall be designed to produce foam at the required application rate within 1 minute of release. Automatic release of the system shall not be permitted unless appropriate operational measures or interlocks are provided to prevent any local application systems required by Ch 4, Sec 6, [4.7], from interfering with the effectiveness of the system.

b) The foam concentrates shall be approved by the Society based on IMO Circular MSC/Circ.670. Different foam concentrate types shall not be mixed in a high-expansion foam system.

c) The system shall be capable of fire extinction and manufactured and tested to the satisfaction of the Society based on IMO Circular MSC.1/Circ.1384.

d) The system and its components shall be suitably designed to withstand ambient temperature changes, vibration, humidity, shock, clogging and corrosion normally encountered on ships. Piping, fittings and related components inside the protected spaces (except gaskets) shall be designed to withstand 925°C.

e) System piping, foam concentrate storage tanks, components and pipe fittings in contact with the foam concentrate shall be compatible with the foam concentrate and be constructed of corrosion resistant materials such as stainless steel, or equivalent. Other system piping and foam generators shall be full galvanized steel or equivalent. Distribution pipework shall have self-draining capability.

f) Means for testing the operation of the system and assuring the required pressure and flow shall be provided by pressure gauges at both inlets (water and foam concentrate supply) and at the outlet of the foam proportioner. A test valve shall be installed on the distribution piping downstream of the foam proportioner, along with orifices which reflect the calculated pressure drop of the system. All sections of piping shall be provided with connections for flushing, draining and purging with air. All nozzles shall be able to be removed for inspection in order to prove clear of debris.

g) Means shall be provided for the crew to safely check the quantity of foam concentrate and take periodic control samples for foam quality.

h) Operating instructions for the system shall be displayed at each operating position.

i) Spare parts shall be provided based on the manufacturer's instruction.

j) If an internal combustion engine is used as a prime mover for the seawater pump for the system, the fuel oil tank to the prime mover shall contain sufficient fuel to enable the pump to run on full load for at least 3 h and sufficient reserves of fuel shall be available outside the machinery space of category A to enable the pump to be run on full load for an additional 15 h. If the fuel tank serves other internal combustion engines simultaneously, the total fuel tank capacity shall be adequate for all connected engines.

k) The arrangement of foam generators and piping in the protected space shall not interfere with access to the installed machinery for routine maintenance activities.

l) The system source of power supply, foam concentrate supply and means of controlling the system shall be readily accessible and simple to operate, and shall be arranged at positions outside the protected space not likely to be cut off by a fire in the protected space. All electrical components directly connected to the foam generators shall have at least an IP 54 rating.

m) The piping system shall be sized in accordance with a hydraulic calculation technique to ensure availability of flows and pressures required for correct performance of the system.

Note 1: Where the Hazen-Williams method is used, the values of the friction factor C given in Tab 3 for different pipe types which may be considered should apply:

n) The arrangement of the protected spaces shall be such that they may be ventilated as the space is being filled with foam. Procedures shall be provided to ensure that upper level dampers, doors and other suitable openings are kept open in case of a fire. For inside air foam systems, spaces below 500 m^3 need not comply with this requirement.

o) Onboard procedures shall be established to require personnel re-entering the protected space after a system discharge to wear breathing apparatus to protect them from oxygen deficient air and products of combustion entrained in the foam blanket.

p) Installation plans and operating manuals shall be supplied to the ship and be readily available on board. A list or plan shall be displayed showing spaces covered and the location of the zone in respect of each section. Instructions for testing and maintenance shall be available on board.

q) *All installation, operation and maintenance instructions/plans for the system shall be in the working language of the ship. If the working language of the ship is not English, French, nor Spanish, a translation into one of these languages shall be included.*

r) *The foam generator room shall be ventilated to protect against overpressure, and shall be heated to avoid the possibility of freezing.*

s) *The quantity of foam concentrate available shall be sufficient to produce a volume of foam equal to at least five times the volume of the largest protected space enclosed by steel bulkheads, at the nominal expansion ratio, or enough for 30 min of full operation for the largest protected space, whichever is greater.*

t) *Machinery spaces, cargo pump-rooms, vehicle spaces, ro-ro spaces and special category spaces shall be provided with audible and visual alarms within the protected space warning of the release of the system. The alarms shall operate for the length of time needed to evacuate the space, but in no case less than 20 s.*

Table 3 : Friction factor C

Pipe type	C
Black or galvanized mild steel	100
Copper or copper alloys	150
Stainless steel	150

5.2.2 Inside air foam systems

a) *Systems for the protection of machinery spaces and cargo pump-rooms*

1) *The system shall be supplied by both main and emergency sources of power. The emergency power supply shall be provided from outside the protected space.*

2) *Sufficient foam-generating capacity shall be provided to ensure the minimum design filling rate for the system is met and in addition shall be adequate to completely fill the largest protected space within 10 min.*

Where such a machinery space includes a casing (e.g. an engine casing in a machinery space of category A containing internal combustion machinery, and/or a boiler), the volume of such casing, above the level up to which foam shall be filled to protect the highest position of the fire risk objects within the machinery space, need not be included in the volume of the protected space.

The level up to which foam shall be filled to protect the highest positioned fire risk objects within the machinery space shall not be less than whichever is higher between 1 m above the highest point of any such object; and the lowest part of the casing.

Where such a machinery space does not include a casing, the volume of the largest protected space shall be that of the space in its entirety, irrespective of the location of any fire risk object therein.

Fire risk objects include, but may not be limited to, those listed in Ch 4, Sec 1, [2.30.1], and those defined in Ch 4, Sec 1, [2.34.1], although not referred to in those requirements, they may also include items having a similar fire risk such as exhaust gas boilers or oil fuel tanks.

3) *The arrangement of foam generators shall in general be designed based on the approval test results. A minimum of two generators shall be installed in every space containing combustion engines, boilers, purifiers, and similar equipment. Small workshops and similar spaces may be covered with only one foam generator.*

4) *Foam generators shall be uniformly distributed under the uppermost ceiling in the protected spaces including the engine casing. The number and location of foam generators shall be adequate to ensure all high risk areas are protected in all parts and at all levels of the spaces. Extra foam generators may be required in obstructed locations. The foam generators shall be arranged with at least 1 m free space in front of the foam outlets, unless tested with less clearance. The generators shall be located behind main structures, and above and away from engines and boilers in positions where damage from an explosion is unlikely.*

b) *Systems for the protection of vehicle, ro-ro, special category and cargo spaces*

1) *The system shall be supplied by the ship's main power source. An emergency power supply is not required.*

2) *Sufficient foam-generating capacity shall be provided to ensure the minimum design filling rate for the system is met and in addition shall be adequate to completely fill the largest protected space within 10 min. However, for systems protecting vehicle and ro-ro spaces and special category spaces, with decks that are reasonably gas-tight and that have a deck height of 3 m or less, the filling rate shall be not less than two thirds of the design filling rate and in addition sufficient to fill the largest protected space within 10 min.*

3) *The system may be divided into sections, however, the capacity and design of the system shall be based on the protected space demanding the greatest volume of foam. Adjacent protected spaces need not be served simultaneously if the boundaries between the spaces are "A" class divisions.*

4) *The arrangement of foam generators shall in general be designed based on the approval test results. The number of generators may be different, but the minimum design filling rate determined during approval testing shall be provided by the system. A minimum of two generators shall be installed in every space. The foam generators shall be arranged to uniformly distribute foam in the protected spaces, and the layout shall take into consideration obstructions that can be expected when cargo is loaded on board. As a minimum, generators shall be located on every second deck, including movable decks. The horizontal spacing of the generators shall ensure rapid supply of foam to all parts of the protected space. This shall be established on the basis of full scale tests.*

5) *The foam generators shall be arranged with at least 1 m free space in front of the foam outlets, unless tested with less clearance.*

5.2.3 Outside air foam systems

a) *Systems for the protection of machinery spaces and cargo pump-rooms*

1) *The system shall be supplied by both main and emergency sources of power. The emergency power supply shall be provided from outside the protected machinery space.*

2) *Sufficient foam-generating capacity shall be provided to ensure the minimum design filling rate for the system is met and in addition shall be adequate to completely fill the largest protected space within 10 min.*

3) *The arrangement of foam delivery ducts shall in general be designed based on the approval test results. The number of ducts may be different, but the minimum design filling rate determined during approval testing shall be provided by the system. A minimum of two ducts shall be installed in every space containing combustion engines, boilers, purifiers, and similar equipment. Small workshops and similar spaces may be covered with only one duct.*

4) *Foam delivery ducts shall be uniformly distributed under the uppermost ceiling in the protected spaces including the engine casing. The number and location of ducts shall be adequate to ensure all high risk areas are protected in all parts and at all levels of the spaces. Extra ducts may be required in obstructed locations. The ducts shall be arranged with at least 1 m free space in front of the foam delivery ducts, unless tested with less clearance. The ducts shall be located behind main structures, and above and away from engines and boilers in positions where damage from an explosion is unlikely.*

5) *The arrangement of the foam delivery ducts shall be such that a fire in the protected space will not affect the foam-generating equipment. If the foam generators are located adjacent to the protected space, foam delivery ducts shall be installed to allow at least 450 mm of separation between the generators and the protected space, and the separating divisions shall be class "A-60" rated. Foam delivery ducts shall be constructed of steel having a thickness of not less than 5 mm. In addition, stainless steel dampers (single or multi-bladed) with a thickness of not less than 3 mm shall be installed at the openings in the boundary bulkheads or decks between the foam generators and the protected space. The dampers shall be automatically operated (electrically, pneumatically or hydraulically) by means of remote control of the foam generator related to them, and arranged to remain closed until the foam generators begin operating.*

6) *The foam generators shall be located where an adequate fresh air supply can be arranged.*

b) *Systems for the protection of vehicle and ro-ro spaces and special category and cargo spaces*

1) *The system shall be supplied by the ship's main power source. An emergency power supply is not required.*

2) *Sufficient foam-generating capacity shall be provided to ensure the minimum design filling rate for the system is met and in addition shall be adequate to completely fill the largest protected space within 10 min. However, for systems protecting vehicle and ro-ro spaces and special category spaces, with decks that are reasonably gas-tight and that have a deck height of 3 m or less, the filling rate shall be not less than two thirds of the design filling rate and in addition sufficient to fill the largest protected space within 10 min.*

3) *The system may be divided into sections, however, the capacity and design of the system shall be based on the protected space demanding the greatest volume of foam. Adjacent protected spaces need not be served simultaneously if the boundaries between the spaces are "A" class divisions.*

4) *The arrangement of foam delivery ducts shall in general be designed based on the approval test results. The number of ducts may be different, but the minimum design filling rate determined during approval testing shall be provided by the system. A minimum of two ducts shall be installed in every space. The foam generators shall be arranged to uniformly distribute foam in the protected spaces, and the layout shall take into consideration obstructions that can be expected when cargo is loaded on board. As a minimum, ducts shall be led to every second deck, including movable decks. The horizontal spacing of the ducts shall ensure rapid supply of foam to all parts of the protected space. This shall be established on the basis of full scale tests.*

5) *The system shall be arranged with at least 1 m free space in front of the foam outlets, unless tested with less clearance.*

6) *The arrangement of the foam delivery ducts shall be such that a fire in the protected space will not affect the foam-generating equipment. If the foam generators are located adjacent to the protected space, foam delivery ducts shall be installed to allow at least 450 mm of separation between the generators and the protected space, and the separating divisions shall be class "A-60" rated. Foam delivery ducts shall be constructed of steel having a thickness of not less than 5 mm. In addition, stainless steel dampers (single or multi-bladed) with a thickness of not less than 3 mm shall be installed at the openings in the boundary bulkheads or decks between the foam generators and the protected space. The dampers shall be automatically operated (electrically, pneumatically or hydraulically) by means of remote control of the foam generator related to them, and arranged to remain closed until the foam generators begin operating.*

7) *The foam generators shall be located where an adequate fresh air supply can be arranged.*

5.2.4 Installation testing requirements

a) *After installation, the pipes, valves, fittings and assembled systems shall be tested to the satisfaction of the Society, including functional testing of the power and control systems, water pumps, foam pumps, valves, remote and local release stations and alarms. Flow at the required pressure shall be verified for the system using orifices fitted to the test line. In addition, all distribution piping shall be flushed with freshwater and blown through with air to ensure that the piping is free of obstructions.*

b) *Functional tests of all foam proportioners or other foam mixing devices shall be carried out to confirm that the mixing ratio tolerance is within +30 to –0% of the nominal mixing ratio defined by the system approval. For foam proportioners using foam concentrates of Newtonian type with kinematic viscosity equal to or less than 100 cSt at 0°C and density equal to or less than 1,100 kg/m^3, this test can be performed with water instead of foam concentrate. Other arrangements shall be tested with the actual foam concentrate.*

5.2.5 Systems using outside air with generators installed inside the protected space

Systems using outside air but with generators located inside the protected space and supplied by fresh air ducts may be accepted by the Society provided that these systems have been shown to have performance and reliability equivalent to systems defined in [5.2.3]. For acceptance, the Society should consider the following minimum design features:

- *lower and upper acceptable air pressure and flow rate in supply ducts;*
- *function and reliability of damper arrangements;*
- *arrangements and distribution of air delivery ducts including foam outlets; and*
- *separation of air delivery ducts from the protected space.*

5.3 Fixed low-expansion foam fire-extinguishing systems

5.3.1 Quantity and foam concentrates

a) *The foam concentrates of low-expansion foam fire-extinguishing systems shall be approved by the Society based on IMO Circular MSC.1/Circ.1312. Different foam concentrate types shall not be mixed in a low-expansion foam system. Foam concentrates of the same type from different manufacturers shall not be mixed unless they are approved for compatibility.*

b) *The system shall be capable of discharging through fixed discharge outlets, in no more than 5 min, a quantity of foam sufficient to produce an effective foam blanket over the largest single area over which oil fuel is liable to spread.*

5.3.2 Installation requirements

a) *Means shall be provided for effective distribution of the foam through a permanent system of piping and control valves or cocks to suitable discharge outlets, and for the foam to be effectively directed by fixed sprayers onto other main fire hazards in the protected space. The means for effective distribution of the foam shall be proven acceptable to the Society through calculation or by testing.*

b) *The means of control of any such systems shall be readily accessible and simple to operate and shall be grouped together in as few locations as possible at positions not likely to be cut off by a fire in the protected space.*

6 Fixed pressure water spraying and water-mist fire-extinguishing systems

6.1 Engineering specifications

6.1.1 Fixed pressure water spraying fire-extinguishing systems

Fixed-pressure water spraying fire-extinguishing systems for machinery spaces and cargo pump-rooms shall be approved by the Society based on IMO Circular MSC.1/Circ.1165, as amended.

6.1.2 Equivalent water-mist fire-extinguishing systems

Water-mist fire-extinguishing systems for machinery spaces and cargo pump rooms shall be approved by the Society based on IMO Circular MSC.1/Circ.1165, as amended.

6.1.3 Fixed pressure water spraying fire-extinguishing systems for cabin balconies

Fixed pressure water spraying fire-extinguishing systems for cabin balconies shall be approved by the Society based on IMO Circular MSC.1/Circ.1268.

6.1.4 Fixed water-based fire-fighting systems for ro-ro spaces, vehicle spaces and special category spaces

Fixed water-based fire-fighting systems for ro-ro spaces, vehicle spaces and special category spaces shall be approved by the Society based on IMO Circular MSC.1/Circ.1430, as amended.

6.1.5 Fixed water-based local application fire-fighting systems

Fixed water-based local application fire-fighting systems are to be approved by the Society based on IMO Circular MSC.1/Circ.1387 as corrected by MSC.1/Circ.1387/Corr.1.

7 Automatic sprinkler, fire detection and fire alarm systems

7.1 Engineering specifications

7.1.1 General

a) *Type of sprinkler systems*

The automatic sprinkler systems shall be of the wet pipe type, but small exposed sections may be of the dry pipe type where, in the opinion of the Society, this is a necessary precaution. Control stations, where water may cause damage to essential equipment, may be fitted with a dry pipe system or a pre-action system as permitted by regulation Pt C, Ch 4, Sec 6, [5.1.1]. Saunas shall be fitted with a dry pipe system, with sprinkler heads having an operating temperature up to 140°C.

b) *Automatic sprinkler systems equivalent to those specified in [7.1.2] to [7.1.4] shall be approved by the Society,* according to IMO Resolution A.800(19), as amended by MSC.265(84) and MSC.284(86).

7.1.2 Sources of power supply

a) *Passenger ships*

There shall be not less than two sources of power supply for the sea water pump and automatic alarm and detection system. Where the sources of power for the pump are electrical, these shall be a main generator and an emergency source of power. One supply for the pump shall be taken from the main switchboard, and one from the emergency switchboard by separate feeders reserved solely for that purpose. The feeders shall be so arranged as to avoid galleys, machinery spaces and other enclosed spaces of high fire risk except in so far as it is necessary to reach the appropriate switchboards, and shall be run to an automatic change-over switch situated near the sprinkler pump. This switch shall permit the supply of power from the main switchboard so long as a supply is available therefrom, and be so designed that upon failure of that supply it will automatically change-over to the supply from the emergency switchboard. The switches on the main switchboard and the emergency switchboard shall be clearly labelled and normally kept closed. No other switch shall be permitted in the feeders concerned. One of the sources of power supply for the alarm and detection system shall be an emergency source. Where one of the sources of power for the pump is an internal combustion engine it shall, in addition to complying with the provisions of [7.1.4], item c), be so situated that a fire in any protected space will not affect the air supply to the machinery.

b) *Cargo ships*

There shall be not less than two sources of power supply for the sea water pump and automatic alarm and detection system. If the pump is electrically driven, it shall be connected to the main source of electrical power, which shall be capable of being supplied by at least two generators. The feeders shall be so arranged as to avoid galleys, machinery spaces and other enclosed spaces of high fire risk except in so far as it is necessary to reach the appropriate switchboards. One of the sources of power supply for the alarm and detection system shall be an emergency source. Where one of the sources of power for the pump is an internal combustion engine, it shall, in addition to complying with the provisions of [7.1.4], item c), be so situated that a fire in any protected space will not affect the air supply to the machinery.

7.1.3 Component requirements

a) *Sprinklers*

The sprinklers shall be resistant to corrosion by the marine atmosphere. In accommodation and service spaces the sprinklers shall come into operation within the temperature range from 68°C to 79°C, except that in locations such as drying rooms, where high ambient temperatures might be expected, the operating temperature may be increased by not more than 30°C above the maximum deckhead temperature.

b) *Pressure tanks*

1) *A pressure tank having a volume equal to at least twice that of the charge of water specified in this item shall be provided. The tank shall contain a standing charge of fresh water, equivalent to the amount of water which would be discharged in one minute by the pump referred to in item c) 2) below, and the arrangements shall be provided for maintaining an air pressure in the tank such as to ensure that where the standing charge of fresh water in the tank has been used the pressure will be not less than the working pressure of the sprinkler, plus the pressure exerted by a head of water measured from the bottom of the tank to the highest sprinkler in the system. Suitable means of replenishing the air under pressure and of replenishing the fresh water charge in the tank shall be provided. A glass gauge shall be provided to indicate the correct level of the water in the tank.*

   The tank is to be designed and built in compliance with the requirements for pressure vessels given in Ch 1, Sec 3.

2) *Means shall be provided to prevent the passage of sea water into the tank.*

c) *Sprinkler pumps*

1) *An independent power pump shall be provided solely for the purpose of continuing automatically the discharge of water from the sprinklers. The pump shall be brought into action automatically by the pressure drop in the system before the standing fresh water charge in the pressure tank is completely exhausted.*

2) *The pump and the piping system shall be capable of maintaining the necessary pressure at the level of the highest sprinkler to ensure a continuous output of water sufficient for the simultaneous coverage of a minimum area of 280 m^2 at the application rate specified in [7.1.5], item b) 3). The hydraulic capability of the system shall be confirmed by the review of hydraulic calculations, followed by a test of the system, if deemed necessary by the Society.*

3) *The pump shall have fitted on the delivery side a test valve with a short open-ended discharge pipe. The effective area through the valve and pipe shall be adequate to permit the release of the required pump output while maintaining the pressure in the system specified in item b) 1) above.*

7.1.4 Installation requirements

a) *General*

1) *Any parts of the system which may be subjected to freezing temperatures in service shall be suitably protected against freezing.*

2) *Special attention shall be paid to the specification of water quality provided by the system manufacturer to prevent internal corrosion of sprinklers and clogging or blockage arising from products of corrosion or scale-forming minerals.*

b) *Piping arrangements*

1) *Sprinklers shall be grouped into separate sections, each of which shall contain not more than 200 sprinklers. In passenger ships, any section of sprinklers shall not serve more than two decks and shall not be situated in more than one main vertical zone. However, the Society may permit such a section of sprinklers to serve more than two decks or be situated in more than one main vertical zone, if it is satisfied that the protection of the ship against fire will not thereby be reduced.*

   Sprinkler heads installed to fulfil the provisions of Ch 4, Sec 5, [3.2.3] are not required to be solely dedicated to the windows and sidescuttles they are to protect, provided that the sprinkler heads protecting the room and having a spraying density of 5 l/(m^2 min) are arranged such that the window or sidescuttle is covered with the same spraying density and the relevant area is considered in the calculation as per [7.1.5].

2) *Each section of sprinklers shall be capable of being isolated by one stop-valve only. The stop-valve in each section shall be readily accessible in a location outside of the associated section or in cabinets within stairway enclosures. The valve's location shall be clearly and permanently indicated. Means shall be provided to prevent the operation of the stop-valves by any unauthorized person.*

3) *A test valve shall be provided for testing the automatic alarm for each section of sprinklers by a discharge of water equivalent to the operation of one sprinkler. The test valve for each section shall be situated near the stop-valve for that section.*

4) *The sprinkler system shall have a connection from the ship's fire main by way of a lockable screw-down non-return valve at the connection which will prevent a backflow from the sprinkler system to the fire main.*

   The automatic sprinkler fire detection and fire alarm system shall be an independent unit and therefore no other piping system shall be connected to it, except for the following:

   - *connections for feeding the system from shoreside sources, fitted with adjacent stop valves and non-return valves*
   - *connection from the fire main as required above.*

   The valves on the shore filling connection and on the fire main connection shall be fitted with clear and permanent labels indicating their service. These valves shall be capable of being locked in the "closed" position.

5) *A gauge indicating the pressure in the system shall be provided at each section stop-valve and at a central station.*

6) *The sea inlet to the pump shall, wherever possible, be in the space containing the pump and shall be so arranged that when the ship is afloat it will not be necessary to shut off the supply of sea water to the pump for any purpose other than the inspection or repair of the pump.*

c) *Location of systems*

   The sprinkler pump and tank shall be situated in a position reasonably remote from any machinery space of category A and shall not be situated in any space required to be protected by the sprinkler system.

7.1.5 System control requirements

a) *Ready availability*

1) *Any required automatic sprinkler, fire detection and fire alarm system shall be capable of immediate operation at all times and no action by the crew shall be necessary to set it in operation.*

2) *The automatic sprinkler system shall be kept charged at the necessary pressure and shall have provision for a continuous supply of water as required in this Section.*

b) *Alarm and indication*

1) *Each section of sprinklers shall include means for giving a visual and audible alarm signal automatically at one or more indicating units whenever any sprinkler comes into operation. Such alarm systems shall be such as to indicate if any fault occurs in the system. Such units shall indicate in which section served by the system a fire has occurred and shall be centralized on the navigation bridge or in the continuously-manned central control station and, in addition, visible and audible alarms from the unit shall also be placed in a position other than on the aforementioned spaces to ensure that the indication of fire is immediately received by the crew.*

2) *Switches shall be provided at one of the indicating positions referred to in the previous item 1) which will enable the alarm and the indicators for each section of sprinklers to be tested.*

3) *Sprinklers shall be placed in an overhead position and spaced in a suitable pattern to maintain an average application rate of not less than 5 l/m²/minute over the nominal area covered by the sprinklers. For this purpose, nominal area shall be taken as the gross horizontal projection of the area to be covered. However, the Society may permit the use of sprinklers providing such an alternative amount of water suitably distributed as has been shown, to the satisfaction of the Society, to be not less effective.*

4) *A list or plan shall be displayed at each indicating unit showing the spaces covered and the location of the zone in respect of each section. Suitable instructions for testing and maintenance shall be available.*

c) *Testing*

Means shall be provided for testing the automatic operation of the pump on reduction of pressure in the system.

8 Fixed fire detection and fire alarm systems

8.1 Definitions

8.1.1 Section *means a group of fire detectors and manually operated call points as reported in the indicating unit(s).*

8.1.2 Section identification capability *means a system with the capability of identifying the section in which a detector or manually operated call point has activated.*

8.1.3 Individually identifiable *means a system with the capability to identify the exact location and type of detector or manually activated call point which has activated, and which can differentiate the signal of that device from all others.*

8.2 Engineering specifications

8.2.1 General requirements

a) *Any required fixed fire detection and fire alarm system with manually operated call points shall be capable of immediate operation at all times (this does not require a backup control panel). Notwithstanding this, particular spaces may be disconnected, for example, workshops during hot work and ro-ro spaces during on and off-loading. The means for disconnecting the detectors shall be designed to automatically restore the system to normal surveillance after a predetermined time that is appropriate for the operation in question. The space shall be manned or provided with a fire patrol when detectors required by regulation are disconnected. Detectors in all other spaces shall remain operational.*

b) *The fire detection system shall be designed to:*

1) *control and monitor input signals from all connected fire and smoke detectors and manual call points;*

2) *provide output signals to the navigation bridge, continuously manned central control station or onboard safety centre to notify the crew of fire and fault conditions;*

3) *monitor power supplies and circuits necessary for the operation of the system for loss of power and fault conditions; and*

4) *the system may be arranged with output signals to other fire safety systems including:*

- *paging systems, fire alarm or public address systems*
- *fan stops* (See Note 1)
- *fire doors*
- *fire dampers* (See Note 1)
- *sprinkler systems*
- *smoke extraction systems*
- *low-location lighting systems*
- *fixed local application fire-extinguishing systems*
- *closed circuit television (CCTV) systems, and*
- *other fire safety systems.*

Note 1: The ventilation fans and the fire dampers serving a machinery room equipped with internal combustion engines taking their combustion air directly inside the room are not to be automatically stopped or closed in case of fire detection, in order to prevent depressurization of the room.

c) *The fire detection system may be connected to a decision management system provided that:*

1) *the decision management system is proven to be compatible with the fire detection system;*

2) *the decision management system can be disconnected without losing any of the functions required by this chapter for the fire detection system; and*

3) *any malfunction of the interfaced and connected equipment should not propagate under any circumstance to the fire detection system.*

d) *Detectors and manual call points shall be connected to dedicated sections of the fire detection system. Other fire safety functions, such as alarm signals from the sprinkler valves, may be permitted if in separate sections.*

e) The system and equipment shall be suitably designed to withstand supply voltage variation and transients, ambient temperature changes, vibration, humidity, shock, impact and corrosion normally encountered in ships. All electrical and electronic equipment on the bridge or in the vicinity of the bridge shall be tested for electromagnetic compatibility, taking into account IMO Resolution A.813(19).

f) Fixed fire detection and fire alarm systems with individually identifiable fire detectors shall be so arranged that:

1) means are provided to ensure that any fault (e.g. power break, short circuit, earth, etc.) occurring in the section will not prevent the continued individual identification of the remainder of the connected detectors in the section;

2) all arrangements are made to enable the initial configuration of the system to be restored in the event of failure (e.g. electrical, electronic, informatics, etc.);

3) the first initiated fire alarm will not prevent any other detector from initiating further fire alarms; and

4) no section will pass through a space twice. When this is not practical (e.g. for large public spaces), the part of the section which by necessity passes through the space for a second time shall be installed at the maximum possible distance from the other parts of the section.

g) In passenger ships, the fixed fire detection and fire alarm system shall be capable of remotely and individually identifying each detector and manually operated call point. Fire detectors fitted in passenger ship cabins, when activated, shall also be capable of emitting, or cause to be emitted, an audible alarm within the space where they are located. In cargo ships and on passenger ship cabin balconies the fixed fire detection and fire alarm system shall, as a minimum, have section identification capability.

h) In cargo ships and on passenger ship cabin balconies, where an individually identifiable system is fitted, notwithstanding the provisions in item f)1), isolator modules need not be provided at each fire detector if the system is arranged in such a way that the number and location of individually identifiable fire detectors rendered ineffective due to a fault would not be larger than an equivalent section in a section identifiable system, arranged in accordance with [8.2.4], item a).

8.2.2 Sources of power supply

a) There shall be not less than two sources of power supply for the electrical equipment used in the operation of the fixed fire detection and fire alarm system, one of which shall be an emergency source of power. The supply shall be provided by separate feeders reserved solely for that purpose. Such feeders shall run to an automatic change-over switch situated in, or adjacent to, the control panel for the fire detection system. The change-over switch shall be arranged such that a fault will not result in the loss of both power supplies. The main (respective emergency) feeder shall run from the main (respective emergency) switchboard to the change-over switch without passing through any other distributing switchboard.

b) The operation of the automatic changeover switch or a failure of one of the power supplies shall not result in loss of fire detection capability. Where a momentary loss of power would cause degradation of the system, a battery of adequate capacity shall be provided to ensure continuous operation during change-over.

c) There shall be sufficient power to permit the continued operation of the system with all detectors activated, but not more than 100 if the total exceeds this figure.

d) The emergency source of power specified in item a) above may be supplied by accumulator batteries or from the emergency switchboard. The power source shall be sufficient to maintain the operation of the fire detection and fire alarm system for the periods required under Ch 2, Sec 3 for cargo ships and Pt D, Ch 11, Sec 5 for passenger ships and, at the end of that period, shall be capable of operating all connected visual and audible fire alarm signals for a period of at least 30 min.

e) Where the system is supplied from accumulator batteries, they shall be located in or adjacent to the control panel for the fire detection system, or in another location suitable for use in an emergency. The rating of the battery charge unit shall be sufficient to maintain the normal output power supply to the fire detection system while recharging the batteries from a fully discharged condition.

8.2.3 Component requirements

a) Detectors

1) Detectors shall be operated by heat, smoke or other products of combustion, flame, or any combination of these factors. Detectors operated by other factors indicative of incipient fires may be considered by the Society provided that they are no less sensitive than such detectors.

2) Smoke detectors required in all stairways, corridors and escape routes within accommodation spaces shall be certified to operate before the smoke density exceeds 12,5% obscuration per metre, but not until the smoke density exceeds 2% obscuration per metre, when tested according to standards EN 54:2001 and IEC 60092-504. Alternative testing standards may be used as determined by the Society. Smoke detectors to be installed in other spaces shall operate within sensitivity limits to the satisfaction of the Society having regard to the avoidance of detector insensitivity or oversensitivity.

3) Heat detectors shall be certified to operate before the temperature exceeds 78°C but not until the temperature exceeds 54°C, when the temperature is raised to those limits at a rate less than 1°C per minute, when tested according to standards EN 54:2001 and IEC 60092-504. Alternative testing standards may be used as determined by the Society. At higher rates of temperature rise, the heat detector shall operate within temperature limits to the satisfaction of the Society having regard to the avoidance of detector insensitivity or oversensitivity.

4) *The operation temperature of heat detectors in drying rooms and similar spaces of a normal high ambient temperature may be up to 130°C, and up to 140°C in saunas.*

5) *Flame detectors shall be tested according to standards EN 54-10:2001 and IEC 60092-504. Alternative testing standards may be used as determined by the Society.*

6) *All detectors shall be of a type such that they can be tested for correct operation and restored to normal surveillance without the renewal of any component.*

7) *Fixed fire detection and fire alarm systems for cabin balconies shall be approved by the Society, based on IMO Circular MSC.1/Circ.1242.*

8) *Detectors fitted in hazardous areas shall be tested and approved for such service. Detectors required by Ch 4, Sec 13, [3] and installed in spaces that comply with Ch 4, Sec 13, [2.2.2] need not be suitable for hazardous areas. Detectors fitted in spaces carrying dangerous goods, required in Ch 4, Sec 12, Tab 3 to comply with Ch 4, Sec 12, [2.3], shall be suitable for hazardous areas.*

b) *Control panel*

The control panel for the fire detection system shall be tested according to standards EN 54-2:1997, EN 54-4:1997 and IEC 60092-504:2001. Alternative standards may be used as determined by the Society.

c) *Cables*

Cables used in the electrical circuits shall be flame retardant according to standard IEC 60332-1. On passenger ships, cables routed through other main vertical zones that they serve, and cables to control panels in an unattended fire control station shall be fire resisting according to standard IEC 60331, unless duplicated and well separated.

8.2.4 Installation requirements

a) *Sections*

1) *Detectors and manually operated call points shall be grouped into sections.*

2) *A section of fire detectors which covers a control station, a service space or an accommodation space shall not include a machinery space of category A,* a ballast water management room containing equipment related to ozone based ballast water management system *or a ro-ro space. A section of fire detectors which covers a ro-ro space shall not include a machinery space of category A. For fixed fire detection systems with remotely and individually identifiable fire detectors, a section covering fire detectors in accommodation, service spaces and control stations shall not include fire detectors in machinery spaces of category A or ro-ro spaces.*

3) *Where the fixed fire detection and fire alarm system does not include means of remotely identifying each detector individually, no section covering more than one deck within accommodation spaces, service spaces and control stations shall normally be permitted except a section which covers an enclosed stairway. In order to avoid delay in identifying the source of fire, the number of enclosed spaces included in each section shall be limited as determined by the Society. If the detection system is fitted with remotely and individually identifiable fire detectors, the sections may cover several decks and serve any number of enclosed spaces.*

4) *In passenger ships, a section of detectors and manually operated call points shall not be situated in more than one main vertical zone, except on cabin balconies.*

b) *Positioning of detectors*

1) *Detectors shall be located for optimum performance. Positions near beams and ventilation ducts, or other positions where patterns of air flow could adversely affect performance, and positions where impact or physical damage is likely, shall be avoided. Detectors shall be located on the overhead at a minimum distance of 0,5 m away from bulkheads, except in corridors, lockers and stairways.*

2) *The maximum spacing of detectors shall be in accordance with Tab 4. The Society may require or permit other spacing based upon test data which demonstrate the characteristics of the detectors. Detectors located below moveable ro-ro decks shall be in accordance with Tab 4.*

3) *Detectors in stairways shall be located at least at the top level of the stair and at every second level beneath.*

4) *When fire detectors are installed in freezers, drying rooms, saunas, parts of galleys used to heat food, laundries and other spaces where steam and fumes are produced, heat detectors may be used.*

5) *Where a fixed fire detection and fire alarm system is required by regulation Ch 4, Sec 3, [4], spaces having little or no fire risk need not be fitted with detectors. Such spaces include void spaces with no storage of combustibles, private bathrooms, public toilets, fire-extinguishing medium storage rooms, cleaning gear lockers (in which flammable liquids are not stowed), open deck spaces and enclosed promenades having little or no fire risk and that are naturally ventilated by permanent openings.*

c) *Arrangement of cables*

1) *Cables which form part of the system shall be so arranged as to avoid galleys, machinery spaces of category A and other enclosed spaces of high fire risk except where it is necessary to provide for fire detection or fire alarms in such spaces or to connect to the appropriate power supply.*

2) *A section with individually identifiable capability shall be arranged so that it cannot be damaged at more than one point by a fire.*

Table 4 : Spacing of detectors

Type of detector	Maximum floor area per detector	Maximum distance apart between centres	Maximum distance away from bulkheads
Heat	37 m^2	9 m	4,5 m
Smoke	74 m^2	11 m	5,5 m

8.2.5 System control requirements

a) Visual and audible fire signals

1) The activation of any detector or manually operated call point shall initiate a visual and audible fire detection alarm signal at the control panel and indicating units. If the signals have not been acknowledged within 2 minutes, an audible fire alarm shall be automatically sounded throughout the crew accommodation and service spaces, control stations and machinery spaces of category A. This alarm sounder system need not be an integral part of the detection system.

The alarm sounder system utilized by the fixed fire detection and fire alarm system should be powered from no less than two sources of power, one of which should be an emergency source of power.

For ships provided with a transitional source of emergency electrical power, as required by:

- Pt D, Ch 11, Sec 5, [2],
- Ch 2, Sec 3, [2], and
- Ch 2, Sec 3, [3],

the alarm sounder system should also be powered from this power source.

2) In passenger ships, the control panel shall be located in the onboard safety centre. In cargo ships, the control panel shall be located on the navigation bridge or in the fire control station.

3) In passenger ships, an indicating unit that is capable of individually identifying each detector that has been activated or manually operated call point that has operated shall be located on the navigation bridge. In cargo ships, an indicating unit shall be located on the navigation bridge if the control panel is located in the fire control station. In ships with a cargo control room, an additional indicating unit shall be located in the cargo control room. In cargo ships and on passenger cabin balconies, indicating units shall, as a minimum, denote the section in which a detector has activated or manually operated call point has been operated.

A space in which a cargo control console is installed, but does not serve as a dedicated cargo control room (e.g. ship's office, machinery control room), should be regarded as a cargo control room for the purposes of this requirement and therefore be provided with an additional indicating unit.

4) Clear information shall be displayed on or adjacent to each indicating unit about the spaces covered and the location of the sections.

5) Power supplies and electric circuits necessary for the operation of the system shall be monitored for loss of power and fault conditions, as appropriate, including:

- *a single open or power break fault caused by a broken wire;*
- *a single ground fault caused by the contact of a wiring conductor to a metal component; and*
- *a single wire to wire fault caused by the contact of two or more wiring conductors.*

Occurrence of a fault condition shall initiate a visual and audible fault signal at the control panel which shall be distinct from a fire signal.

6) Means to manually acknowledge all alarm and fault signals shall be provided at the control panel. The audible alarm sounders on the control panel and indicating units may be manually silenced. The control panel shall clearly distinguish between normal, alarm, acknowledged alarm, fault and silenced conditions.

7) The system shall be arranged to automatically reset to the normal operating condition after alarm and fault conditions are cleared.

8) When the system is required to sound a local audible alarm within the cabins where the detectors are located, a means to silence the local audible alarms from the control panel shall not be permitted.

9) In general, audible alarm sound pressure levels at the sleeping positions in the cabins and 1 m from the source shall be at least 75 dB(A) and at least 10 dB(A) above ambient noise levels existing during normal equipment operation with the ship under way in moderate weather. The sound pressure level should be in the 1/3 octave band about the fundamental frequency. Audible alarm signals shall not exceed 120 dB(A).

b) Testing

Suitable instructions and component spares for testing and maintenance shall be provided. Detectors shall be periodically tested using equipment suitable for the types of fires to which the detector is designed to respond. Detectors installed within cold spaces such as refrigerated compartments shall be tested using procedures having due regard for such locations. Ships with self-diagnostic systems that have in place a cleaning regime for areas where heads may be prone to contamination may carry out testing in accordance with the requirements of the Society.

9 Sample extraction smoke detection systems

9.1 Engineering specifications

9.1.1 General requirements

a) *Wherever in the text of Article [9] the word "system" appears, it shall mean "sample extraction smoke detection system".*

A sample extraction smoke detection system consists of the following main components:

1) *smoke accumulators: air collection devices installed at the open ends of the sampling pipes in each cargo hold that perform the physical function of collecting air samples for transmission to the control panel through the sampling pipes, and may also act as discharge nozzles for the fixed-gas fire-extinguishing system, if installed;*

2) *sampling pipes: a piping network that connects the smoke accumulators to the control panel, arranged in sections to allow the location of the fire to be readily identified;*

3) *three-way valves: if the system is interconnected to a fixed-gas fire-extinguishing system, three-way valves are used to normally align the sampling pipes to the control panel and, if a fire is detected, the three-way valves are re-aligned to connect the sampling pipes to the fire-extinguishing system discharge manifold and isolate the control panel; and*

4) *control panel: the main element of the system which provides continuous monitoring of the protected spaces for indication of smoke. It typically may include a viewing chamber or smoke sensing units. Extracted air from the protected spaces is drawn through the smoke accumulators and sampling pipes to the viewing chamber, and then to the smoke sensing chamber where the airstream is monitored by electrical smoke detectors. If smoke is sensed, the repeater panel (normally on the bridge) automatically sounds an alarm (not localized). The crew can then determine at the smoke sensing unit which cargo hold is on fire and operate the pertinent three-way valve for discharge of the extinguishing agent.*

b) *Any required system shall be capable of continuous operation at all times except that systems operating on a sequential scanning principle may be accepted, provided that the interval between scanning the same position twice gives a maximum allowable interval determined as follows:*

The interval (I) should depend on the number of scanning points (N) and the response time of the fans (T), with a 20% allowance:

$I = 1,2\ T\ N$

However, the maximum allowable interval should not exceed 120 s (Imax = 120 s).

c) *The system shall be designed, constructed and installed so as to prevent the leakage of any toxic or flammable substances or fire-extinguishing media into any accommodation and service space, control station or machinery space.*

d) *The system and equipment shall be suitably designed to withstand supply voltage variations and transients, ambient temperature changes, vibration, humidity, shock, impact and corrosion normally encountered in ships and to avoid the possibility of ignition of a flammable gas-air mixture.*

e) *The system shall be of a type that can be tested for correct operation and restored to normal surveillance without the renewal of any component.*

f) *An alternative power supply for the electrical equipment used in the operation of the system shall be provided.*

9.1.2 Component requirements

a) *The sensing unit shall be certified to operate before the smoke density within the sensing chamber exceeds 6,65% obscuration per metre.*

b) *Duplicate sample extraction fans shall be provided. The fans shall be of sufficient capacity to operate with the normal conditions or ventilation in the protected area and the connected pipe size shall be determined with consideration of fan suction capacity and piping arrangement to satisfy the conditions of [9.1.4], item b) 2). Sampling pipes shall be a minimum of 12 mm internal diameter. The fan suction capacity should be adequate to ensure the response of the most remote area within the time criteria required in [9.1.4], item b) 2). Means to monitor airflow shall be provided in each sampling line.*

c) *The control panel shall permit observation of smoke in the individual sampling pipes.*

d) *The sampling pipes shall be so designed as to ensure that, as far as practicable, equal quantities of airflow are extracted from each interconnected accumulator.*

e) *Sampling pipes shall be provided with an arrangement for periodically purging with compressed air.*

f) *The control panel for the smoke detection system shall be tested according to standards EN 54-2 (1997), EN 54-4 (1997) and IEC 60092-504 (2001). Alternative standards may be used as determined by the Society.*

9.1.3 Installation requirements

a) *Smoke accumulators*

1) *At least one smoke accumulator shall be located in every enclosed space for which smoke detection is required. However, where a space is designed to carry oil or refrigerated cargo alternatively with cargoes for which a smoke sampling system is required, means may be provided to isolate the smoke accumulators in such compartments for the system. Such means shall be to the satisfaction of the Society.*

2) *Smoke accumulators shall be located on the overhead or as high as possible in the protected space and shall be spaced so that no part of the overhead deck area is more than 12 m measured horizontally from an accumulator. Where systems are used in spaces which may be mechanically ventilated, the position of the smoke accumulators shall be considered having regard to the effects of ventilation. At least one additional smoke accumulator is to be provided in the upper part of each exhaust ventilation duct. An adequate filtering system shall be fitted at the additional accumulator to avoid dust contamination.*
3) *Smoke accumulators shall be positioned where impact or physical damage is unlikely to occur.*
4) *Sampling pipe networks shall be balanced to ensure compliance with [9.1.2], item d). The number of accumulators connected to each sampling pipe shall ensure compliance with [9.1.4], item b) 2).*
5) *Smoke accumulators from more than one enclosed space shall not be connected to the same sampling pipe.*
6) *In cargo holds where non-gastight "'tween deck panels" (movable stowage platforms) are provided, smoke accumulators shall be located in both the upper and lower parts of the holds.*

b) *Sampling pipes*
1) *The sampling pipe arrangements shall be such that the location of the fire can be readily identified.*
2) *Sampling pipes shall be self-draining and suitably protected from impact or damage from cargo working.*

9.1.4 System control requirements

a) *Visual and audible fire signals*
1) *The detection of smoke or other products of combustion shall initiate a visual and audible signal at the control panel and indicating units.*
2) *The control panel shall be located on the navigation bridge or in the fire control station. An indicating unit shall be located on the navigation bridge if the control panel is located in the fire control station.*

   the control panel can be located in the CO_2 room provided that an indicating unit is located on the navigation bridge. Indicating unit has the same meaning as repeater panel and observation of smoke should be made either by electrical means or by visual on repeater panel.
3) *Clear information shall be displayed on, or adjacent to, the control panel and indicating units designating the spaces covered.*
4) *Power supplies necessary for the operation of the system shall be monitored for loss of power. Any loss of power shall initiate a visual and audible signal at the control panel and the navigation bridge which shall be distinct from a signal indicating smoke detection.*
5) *Means to manually acknowledge all alarm and fault signals shall be provided at the control panel. The audible alarm sounders on the control panel and indicating units may be manually silenced. The control panel shall clearly distinguish between normal, alarm, acknowledged alarm, fault and silenced conditions.*
6) *The system shall be arranged to automatically reset to the normal operating condition after alarm and fault conditions are cleared.*

b) *Testing*
1) *Suitable instructions and component spares shall be provided for the testing and maintenance of the system.*
2) *After installation, the system shall be functionally tested using smoke generating machines or equivalent as a smoke source. An alarm shall be received at the control unit in not more than 180 s for vehicle decks, and not more than 300 s for container and general cargo holds, after smoke is introduced at the most remote accumulator.*

10 Low-location lighting systems

10.1 Application

10.1.1 *This Article details the specifications for low-location lighting systems as required by Ch 4, Sec 8.*

10.2 Engineering specification

10.2.1 General requirements

Any required low-location lighting systems shall be approved by the Society based on IMO resolution A.752(18) and on the Recommendations by the International Organization for Standardization, in particular, publication ISO 15370 on Low-location lighting on passenger ships.

11 Fixed emergency fire pumps

11.1 Engineering specifications

11.1.1 Type of emergency fire pumps

The emergency fire pump shall be a fixed independently driven power-operated pump.

11.1.2 Component requirements

a) Emergency fire pumps

1) Capacity of the pump

The capacity of the pump shall not be less than 40% of the total capacity of the fire pumps required by Ch 4, Sec 6, [1.3.4] and in any case not less than the following:

- *for passenger ships of less than 1000 gross tonnage and for cargo ships of 2000 gross tonnage and upwards: 25 m^3/h, and*
- *for cargo ships of less than 2000 gross tonnage: 15 m^3/h.*

The emergency pump is to be capable of supplying two jets of water to the satisfaction of the Society and the amount of water needed for any fixed fire-extinguishing system provided to protect the space where the main fire pumps are located.

On board cargo ships designed to carry five or more tiers of containers on or above the weather deck, the total capacity of the emergency fire pump need not exceed 72 m^3/h.

2) Pressure at hydrants

When the pump is delivering the quantity of water required by item 1) above, the pressure at any hydrants shall be not less than the minimum pressure required in Ch 4, Sec 6, [1.2.6].

3) Suction heads

The total suction head and the net positive suction head of the pump shall be determined having due regard to the requirements of Ch 4, Sec 6 and the present Article on the pump capacity and on the hydrant pressure under all conditions of list, trim, roll and pitch likely to be encountered in service. The ballast condition of a ship on entering or leaving a dry dock need not be considered a service condition.

4) Arrangement of the sea suction of the emergency fire pump

- The sea suction for the pump is to be fitted at a safe depth below the waterline at any draught under all trim and heeling conditions; the ballast condition of a ship on entering or leaving a dry dock need not be considered a service condition. The emergency fire pump is to be of the self-priming type. The location of the pump is to be such that it is capable of pumping at any draught under all trim and heeling conditions. The sea valve is to be capable of being operated from a position near the pump.
- Where it is found necessary to locate the emergency fire pump sea suction in the space containing the main fire pumps, the sea valve is to be operable from a readily accessible position not likely to be affected by a fire in the space containing the main fire pumps.

b) Diesel engines and fuel tank

1) Starting of diesel engine

Any diesel-driven power source for the pump shall be capable of being readily started in its cold condition down to the temperature of 0°C by hand (manual) cranking. Where ready starting cannot be assured, if this is impracticable, or if lower temperatures are likely to be encountered, and if the room for the diesel driven power source is not heated, electric heating of the diesel engine cooling water or lubricating oil system shall be fitted, to the satisfaction of the Society. If hand (manual) starting is impracticable, the Society may permit compressed air, electricity, or other sources of stored energy, including hydraulic power or starting cartridges to be used as a means of starting. These means shall be such as to enable the diesel-driven power source to be started at least six times within a period of 30 minutes and at least twice within the first 10 minutes.

2) Fuel tank capacity

Any service fuel tank shall contain sufficient fuel to enable the pump to run on full load for at least 3 hours and sufficient reserves of fuel shall be available outside the machinery space of category A to enable the pump to be run on full load for an additional 15 hours.

c) Prime mover and source of power of the emergency fire pump

1) The emergency fire pump and its prime mover are to be to the satisfaction of the Society.

2) The emergency fire pump prime mover is to be so arranged that an immediate start is possible under all prevailing temperature conditions. Diesel engines exceeding 15 kW are to be equipped with an approved auxiliary starting device, e.g. starting battery, independent hydraulic system or independent starting air system, having a capacity sufficient for at least six starts of the fire emergency pump. For diesel engines of 15 kW and smaller, manual means of starting are sufficient.

3) For the operation of the emergency fire pump, fuel is to be available from outside the main machinery space for at least 18h operation.

4) When the emergency fire pump is electrically driven, the power is to be supplied by a source other than that supplying the main fire pumps and to be located outside the engine room, and separated from it by an A class division, and the relevant electrical cables are not to pass through the compartment containing the main fire pump.

d) Testing of the emergency fire pump and its prime mover

1) Upon completion of the installation of the emergency fire pump, a running test is to be carried out to the satisfaction of the Society.

2) The emergency generator and its prime mover and any emergency accumulator battery are to be so arranged as to ensure that they will function at full rated power when the ship is upright and when inclined at any angle of list up to and including 22,5° either way or up to and including 10° inclination either way in the fore and aft direction. The above angles of list and trim are to be considered to occur simultaneously in their most unfavourable combination (see also Ch 1, Sec 1, [2.4]).

12 Arrangement of means of escape

12.1 Passenger ships

12.1.1 Width of stairways

a) *Basic requirements for stairway widths*

Stairways shall not be less than 900 mm in clear width. The minimum clear width of stairways shall be increased by 10 mm for every one person provided for in excess of 90 persons. The total number of persons to be evacuated by such stairways shall be assumed to be two thirds of the crew and the total number of passengers in the areas served by such stairways. The width of the stairways shall not be inferior to those determined by item b) hereafter.

b) *Calculation method of stairway widths*

1) *Basic principles of the calculation*

- *This calculation method determines the minimum stairway width at each deck level, taking into account the consecutive stairways leading into the stairway under consideration.*
- *It is the intention that the calculation method shall consider evacuation from enclosed spaces within each main vertical zone individually and take into account all of the persons using the stairway enclosures in each zone, even if they enter that stairway from another vertical zone.*
- *For each main vertical zone the calculation shall be completed for the night-time (case 1) and daytime (case 2) and the largest dimension from either case used for determining the stairway width for each deck under consideration.*
- *The calculation of stairway widths shall be based upon the crew and passenger load on each deck. Occupant loads shall be rated by the designer for passenger and crew accommodation spaces, service spaces, control spaces and machinery spaces. For the purpose of the calculation the maximum capacity of a public space shall be defined by either of the following two values: the number of seats or similar arrangements, or the number obtained by assigning 2 m^2 of gross deck surface area to each person.*

2) *Calculation method for minimum value*

- *Basic formulae*

In considering the design of stairway widths for each individual case which allow for the timely flow of persons evacuating to the assembly stations from adjacent decks above and below, the following calculation methods shall be used (see Fig 2 and Fig 1):

- *when joining two decks:*

  $W = (N1 + N2) \times 10$ mm

- *when joining three decks:*

  $W = (N1 + N2 + 0,5\ N3) \times 10$ mm

- *when joining four decks:*

  $W = (N1 + N2 + 0,5\ N3 + 0,25\ N4) \times 10$ mm

- *when joining five decks or more decks, the width of the stairways shall be determined by applying the above formula for four decks to the deck under consideration and to the consecutive deck,*

where:

W : The required tread width between handrails of the stairway.

The calculated value of W may be reduced where available landing area S is provided in stairways at the deck level defined by subtracting P from Z, such that:

$P = S \times 3,0$ persons/m^2; and $P_{max} = 0,25\ Z$

where:

Z : The total number of persons expected to be evacuated on the deck being considered

P : The number of persons taking temporary refuge on the stairway landing, which may be subtracted from Z to a maximum value of P = 0,25 Z (to be rounded down to the nearest whole number)

S : The surface area (m^2) of the landing, minus the surface area necessary for the opening of doors and minus the surface area necessary for accessing the flow on stairs (see Fig 2)

N : *The total number of persons expected to use the stairway from each consecutive deck under consideration; N1 is for the deck with the largest number of persons using that stairway; N2 is taken for the deck with the next highest number of persons directly entering the stairway flow such that when sizing the stairway width at each deck level:*

N1 > N2 > N3 > N4 (see Fig 1). These decks are assumed to be on or up-stream (i.e. away from the embarkation deck) of the deck being considered.

- *Distribution of persons*

  The dimensions of the means of escape shall be calculated on the basis of the total number of persons expected to escape by the stairway and through doorways, corridors and landings (see Fig 3). Calculations shall be made separately for the two cases of occupancy of the spaces specified below. For each component part of the escape route, the dimension taken shall not be less than the largest dimension determined for each case:

  Case 1:

  - *passengers in cabins with maximum berthing capacity fully occupied*
  - *members of the crew in cabins occupied to 2/3 of maximum berthing capacity, and*
  - *service spaces occupied by 1/3 of the crew.*

  Case 2:

  - *passengers in public spaces occupied to 3/4 of maximum capacity,*
  - *1/3 of the crew distributed in public spaces*
  - *service spaces occupied by 1/3 of the crew, and*
  - *crew accommodation occupied by 1/3 of the crew.*

  The maximum number of persons contained in a main vertical zone, including persons entering stairways from another main vertical zone, shall not be assumed to be higher than the maximum number of persons authorized to be carried on board for the calculation of stairway widths only.

c) *Prohibition of decrease in width in the direction to the assembly station*

The stairway shall not decrease in width in the direction of evacuation to the assembly station. Where several assembly stations are in one main vertical zone, the stairway width shall not decrease in the direction of the evacuation to the most distant assembly station.

Figure 1 : Minimum stairway width (W) calculation example

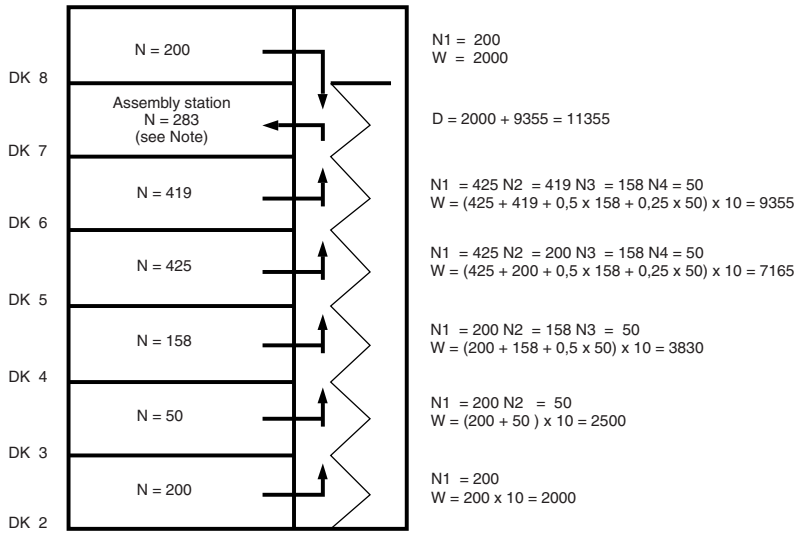

Z (pers) = number of persons expected to evacuate through the stairway

N (pers) = number of persons directly entering the stairway flow from a given deck

W (mm) = (N1 + N2 + 0,5 N3 + 0,25 N4) x 10 = calculated width of stairway

D (mm) = width of exit doors

N1 > N2 > N3 > N4 where:

N1 (pers) = the deck with the largest number of persons N entering directly the stairway

N2 (pers) = the deck with the next largest number of persons N entering directly the stairway, etc.

Note: The doors to the assembly station shall have aggregate widths of 11355 mm.

12.1.2 Details of stairways

a) *Handrails*

Stairways shall be fitted with handrails on each side. The maximum clear width between handrails shall be 1800 mm.

b) *Alignment of stairways*

All stairways sized for more than 90 persons shall be aligned fore and aft.

c) *Vertical rise and inclination*

Stairways shall not exceed 3,5 m in vertical rise without the provision of a landing and shall not have an angle of inclination greater than 45°.

d) *Landings*

With the exception of intermediate landings, landings at each deck level shall be not less than 2 m² in area and shall increase by 1 m² for every 10 persons provided for in excess of 20 persons, but need not exceed 16 m², except for those landings servicing public spaces having direct access onto the stairway enclosure. Intermediate landings shall be sized in accordance with [12.1.3], item a).

12.1.3 Doorways and corridors

a) *Doorways and corridors and intermediate landings included in means of escape shall be sized in the same manner as stairways.*

b) *The aggregate width of stairway exit doors to the assembly station shall not be less than the aggregate width of stairways serving this deck.*

Figure 2 : Landing calculation for stairway width reduction

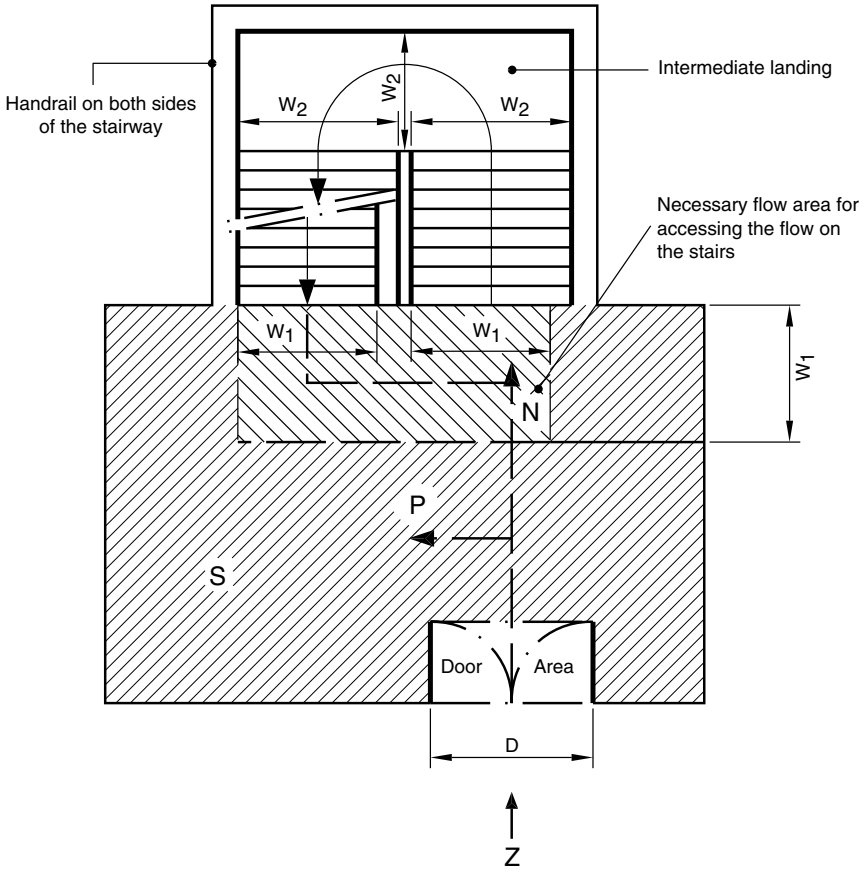

P = S x 3 persons/m² = the number of persons taking refuge on the landing to a maximum of P = 0,25 Z

N = Z – P = the number of persons directly entering the stairway flow from a given deck

Z = number of persons to be evacuated from the deck considered

S = available landing area (m²) after subtracting the surface area necessary for movement and subtracting the space taken by the door swing area. Landing area is a sum of flow area, credit area and door area

D = width of exit doors to the stairway landing area (mm).

Figure 3 : Occupant loading calculation example

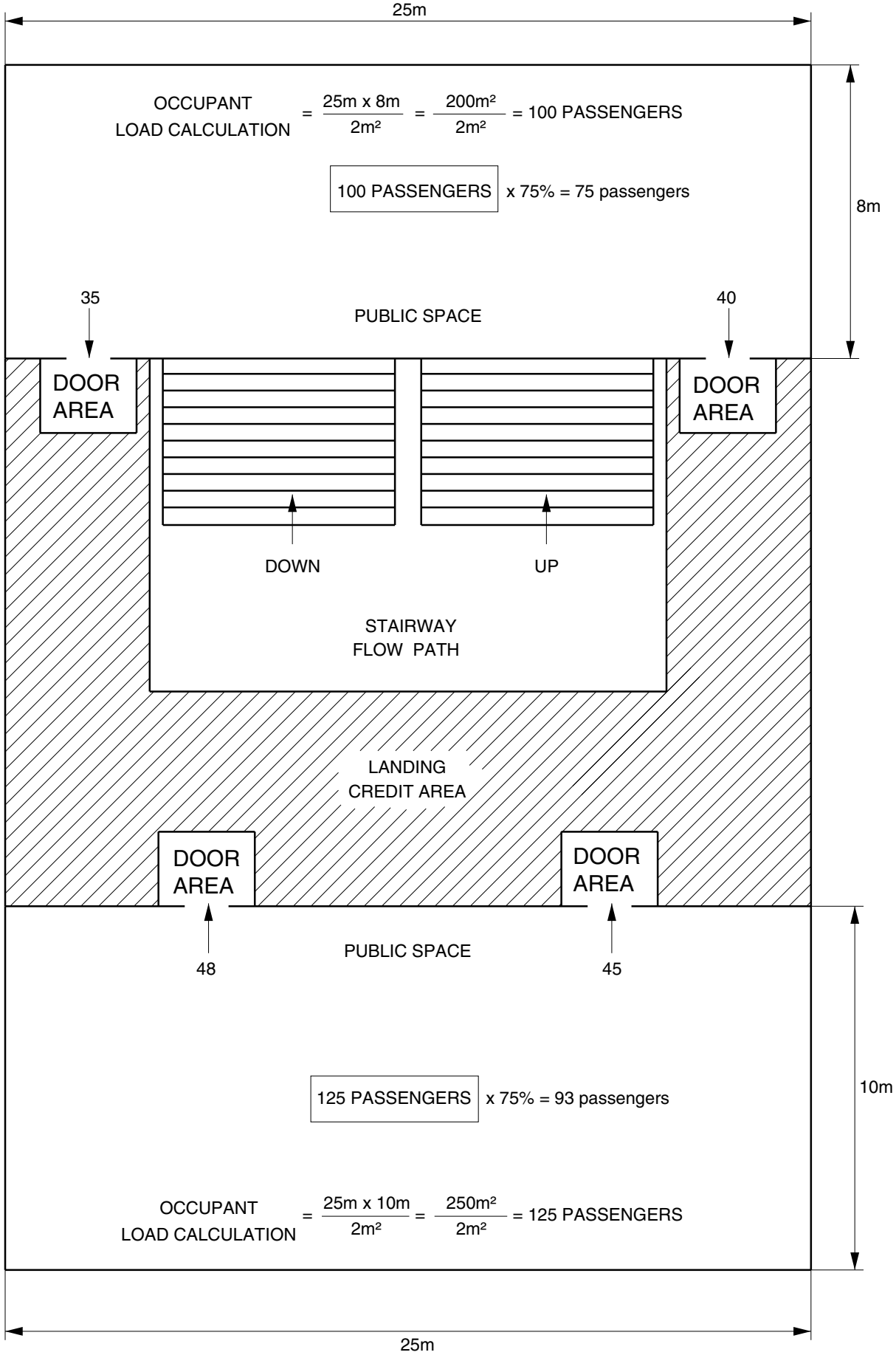

12.1.4 Evacuation routes to the embarkation deck

a) Assembly station

It shall be recognized that the evacuation routes to the embarkation deck may include an assembly station. In this case, consideration shall be given to the fire protection requirements and sizing of corridors and doors from the stairway enclosure to the assembly station and from the assembly station to the embarkation deck, noting that evacuation of persons from assembly stations to embarkation positions will be carried out in small controlled groups.

b) Routes from the assembly station to the survival craft embarkation position

Where the passengers and crew are held at an assembly station which is not at the survival craft embarkation position, the dimension of stairway width and doors from the assembly station to this position shall be based on the number of persons in the controlled group. The width of these stairways and doors need not exceed 1500 mm unless larger dimensions are required for evacuation of these spaces under normal conditions.

12.1.5 Means of escape plans

Means of escape plans shall be provided indicating the following:

a) the number of crew and passengers in all normally occupied spaces

b) the number of crew and passengers expected to escape by stairway and through doorways, corridors and landings

c) assembly stations and survival craft embarkation positions

d) primary and secondary means of escape, and

e) width of stairways, doors, corridors and landing areas.

Means of escape plans shall be accompanied by detailed calculations for determining the width of escape stairways, doors, corridors and landing areas (see also Ch 4, Sec 8, [2.2.3], item g)).

12.2 Cargo ships

12.2.1 *Stairways and corridors used as means of escape shall be not less than 700 mm in clear width and shall have a handrail on one side. Stairways and corridors with a clear width of 1800 mm and over shall have handrails on both sides. Clear width is considered the distance between the handrail and the bulkhead on the other side or between the handrails. The angle of inclination of stairways should be, in general, 45°, but not greater than 50°, and in machinery spaces and small spaces not more than 60°. Doorways which give access to a stairway shall be of the same size as the stairway.*

13 Inert gas systems

13.1 Definitions

13.1.1 *For the purposes of this Article:*

a) Cargo tanks means those cargo tanks, including slop tanks, which carry cargoes, or cargo residues, having a flashpoint not exceeding 60ºC.

b) Inert gas system includes inert gas systems using flue gas, inert gas generators, and nitrogen generators and means the inert gas plant and inert gas distribution together with means for preventing backflow of cargo gases to machinery spaces, fixed and portable measuring instruments and control devices.

c) Gas-safe space is a space in which the entry of gases would produce hazards with regard to flammability or toxicity.

d) Gas-free is a condition in a tank where the content of hydrocarbon or other flammable vapour is less than 1% of the lower flammable limit (LFL), the oxygen content is at least 21%, and no toxic gases are present.

Note 1: Refer to the Revised recommendations for entering enclosed spaces aboard ships (IMO resolution A.1050(27)).

13.2 Requirements for all systems

13.2.1 General

a) The inert gas systems shall be designed, constructed and tested to the satisfaction of the Society. It shall be designed to be capable of rendering and maintaining the atmosphere of the relevant cargo tanks non-flammable.

Note 1: Refer to the Revised standards for the design, testing and locating of devices to prevent the passage of flame into cargo tanks in tankers (MSC/Circ.677, as amended by MSC/Circ.1009 and MSC.1/Circ.1324) and the Revised factors to be taken into consideration when designing cargo tank venting and gas-freeing arrangements (MSC/Circ.731).

b) The system shall be capable of:

1) inerting empty cargo tanks and maintaining the atmosphere in any part of the tank with an oxygen content not exceeding 8% by volume and at a positive pressure in port and at sea except when it is necessary for such a tank to be gas-free;

2) eliminating the need for air to enter a tank during normal operations except when it is necessary for such a tank to be gas-free;

3) purging empty cargo tanks of hydrocarbon or other flammable vapours, so that subsequent gas-freeing operations will at no time create a flammable atmosphere within the tank;

4) delivering inert gas to the cargo tanks at a rate of at least 125% of the maximum rate of discharge capacity of the ship expressed as a volume. For chemical tankers and chemical/product tankers, the Society may accept inert gas systems having a lower delivery capacity provided that the maximum rate of discharge of cargoes from cargo tanks being protected by the system is restricted to not more than 80% of the inert gas capacity; and

5) delivering inert gas with an oxygen content of not more than 5% by volume to the cargo tanks at any required rate of flow.

c) Materials used in inert gas systems shall be suitable for their intended purpose. In particular, those components which may be subjected to corrosive action of the gases and/or liquids are to be either constructed of corrosion-resistant material or lined with rubber, glass fibre epoxy resin or other equivalent coating material.

d) The inert gas supply may be:

1) treated flue gas from main or auxiliary boilers, or

2) gas from an oil or gas-fired gas generator, or

3) gas from nitrogen generators.

The Society may accept systems using inert gases from one or more separate gas generators or other sources or any combination thereof, provided that an equivalent level of safety is achieved. Such systems shall, as far as practicable, comply with the requirements of this article. Systems using stored carbon dioxide shall not be permitted unless the Administration is satisfied that the risk of ignition from generation of static electricity by the system itself is minimized.

13.2.2 Safety measures

a) The inert gas system shall be so designed that the maximum pressure which it can exert on any cargo tank will not exceed the test pressure of any cargo tank.

b) Automatic shutdown of the inert gas system and its components parts shall be arranged on predetermined limits being reached, taking into account the provisions of [13.2.4], [13.3.3] and [13.4.3].

The automatic shutdown of the inert gas system and its components should involve the following:

- shutdown of fans and closing of regulating valve for the following:
  - high water level in scrubber (not applicable for N2);
  - low pressure/flow to scrubber (not applicable for N2); or
  - high-high temperature of inert gas supply.
- closing of regulating valve in the event of:
  - high oxygen content (in excess of 5% by volume); or
  - failure of blowers/fans or N2 compressors.
- activation of double-block and bleed arrangement upon:
  - loss of inert gas supply (for ships with double block and bleed replacing water seal); or
  - loss of power.

c) Suitable shutoff arrangements shall be provided on the discharge outlet of each generator plant.

d) The system shall be designed to ensure that if the oxygen content exceeds 5% by volume, the inert gas shall be automatically vented to atmosphere.

e) Arrangements shall be provided to enable the functioning of the inert gas plant to be stabilized before commencing cargo discharge. If blowers are to be used for gas-freeing, their air inlets shall be provided with blanking arrangements.

f) Where a double block and bleed valve is installed, the system shall ensure upon of loss of power, the block valves are automatically closed and the bleed valve is automatically open.

13.2.3 System components

a) Non-return devices

1) At least two non-return devices shall be fitted in order to prevent the return of vapour and liquid to the inert gas plant, or to any gas-safe spaces.

2) *The first non-return device shall be a deck seal of the wet, semi-wet, or dry type or a double-block and bleed arrangement. Two shut-off valves in series with a venting valve in between, may be accepted provided:*
   - *the operation of the valve is automatically executed. Signal(s) for opening/closing is (are) to be taken from the process directly, e.g. inert gas flow or differential pressure; and*
   - *alarm for faulty operation of the valves is provided, e.g. the operation status of "blower stop" and "supply valve(s) open" is an alarm condition.*
3) *The second non-return device shall be a non-return valve or equivalent capable of preventing the return of vapours and liquids and fitted between the deck water seal (or equivalent device) and the first connection from the inert gas main to a cargo tank. It shall be provided with positive means of closure. As an alternative to positive means of closure, an additional valve having such means of closure may be provided between the non-return valve and the first connection to the cargo tanks to isolate the deck water seal, or equivalent device, from the inert gas main to the cargo tanks.*
4) *A water seal, if fitted, shall be capable of being supplied by two separate pumps, each of which shall be capable of maintaining an adequate supply at all times. The audible and visual alarm on the low level of water in the water seal shall operate at all times.*
5) *The arrangement of the water seal, or equivalent devices, and its associated fittings shall be such that it will prevent backflow of vapours and liquids and will ensure the proper functioning of the seal under operating conditions.*
6) *Provision shall be made to ensure that the water seal is protected against freezing, in such a way that the integrity of seal is not impaired by overheating.*
7) *A water loop or other approved arrangement shall also be fitted to each associated water supply and drain pipe and each venting or pressure-sensing pipe leading to gas-safe spaces. Means shall be provided to prevent such loops from being emptied by vacuum.*
8) *Any water seal, or equivalent device, and loop arrangements shall be capable of preventing return of vapours and liquids to an inert gas plant at a pressure equal to the test pressure of the cargo tanks.*
9) *The non-return devices shall be located in the cargo area on deck.*

b) *Inert gas lines*

1) *The inert gas main may be divided into two or more branches* downstream *of the non-return devices required by [13.2.3], item a).*
2) *The inert gas main shall be fitted with branch piping leading to the cargo tank. Branch piping for inert gas shall be fitted with either stop valves or equivalent means of control for isolating each tank. Where stop valves are fitted, they shall be provided with locking arrangements. The control system shall provide unambiguous information of the operational status of such valves to at least the control panel required in [13.2.4].*

   Unambiguous information of the operational status of stop valves in branch piping leading from the inert gas main to cargo tanks means position indicators providing open/intermediate/closed status information in the control panel required in [13.2.4]. Limit switches should be used to positively indicate both open and closed positions. Intermediate position status should be indicated when the valve is in neither open nor closed position.
3) *Each cargo tank not being inerted shall be capable of being separated from the inert gas main by:*
   - *removing spool-pieces, valves or other pipe sections, and blanking the pipe ends; or*
   - *arrangement of two spectacle flanges in series with provisions for detecting leakage into the pipe between the two spectacle flanges; or*
   - *equivalent arrangements to the satisfaction of the Society, providing at least the same level of protection.*
4) *Means shall be provided to protect cargo tanks against the effect of overpressure or vacuum caused by thermal variations and/or cargo operations when the cargo tanks are isolated from the inert gas mains.*
5) *Piping systems shall be so designed as to prevent the accumulation of cargo or water in the pipelines under all normal conditions.*
6) *Arrangements shall be provided to enable the inert gas main to be connected to an external supply of inert gas. The arrangements shall consist of a 250 mm nominal pipe size bolted flange, isolated from the inert gas main by a valve and located* downstream *of the non-return valve. The design of the flange should conform to the appropriate class in the standards adopted for the design of other external connections in the ship's cargo piping system.*
7) *If a connection is fitted between the inert gas main and the cargo piping system, arrangements shall be made to ensure an effective isolation having regard to the large pressure difference which may exist between the systems. This shall consist of two shutoff valves with an arrangement to vent the space between the valves in a safe manner or an arrangement consisting of a spool-piece with associated blanks.*
8) *The valve separating the inert gas main from the cargo main and which is on the cargo main side shall be a non-return valve with a positive means of closure.*
9) *Inert gas piping systems shall not pass through accommodation, service and control station spaces.*
10) *In combination carriers, the arrangement to isolate the slop tanks containing oil or oil residues from other tanks shall consist of blank flanges which will remain in position at all times when cargoes other than oil are being carried except as provided for in the relevant section of IMO Circular MSC/Circ.353, as amended by IMO Circular MSC/Circ.387.*

13.2.4 Indicators and alarms

a) *The operation status of the inert gas system shall be indicated in a control panel.*

The operational status of the inert gas system is to be based on indication that inert gas is being supplied downstream of the gas regulating valve and on the pressure or flow of the inert gas mains downstream of the non-return devices. However, the operational status of the inert gas system is not to be considered to require additional indicators and alarms other than those specified in this requirement and [13.3.3] or [13.4.3], as appropriate.

b) *Instrumentation shall be fitted for continuously indicating and permanently recording, when inert gas is being supplied:*

1) *the pressure of the inert gas mains* downstream *of the non-return devices; and*

2) *the oxygen content of the inert gas.*

c) *The indicating and recording devices shall be placed in the cargo control room where provided. But where no cargo control room is provided, they shall be placed in a position easily accessible to the officer in charge of cargo operations.*

d) *In addition, meters shall be fitted:*

1) *in the navigation bridge to indicate at all times the pressure referred to in item b) 1) and the pressure in the slop tanks of combination carriers, whenever those tanks are isolated from the inert gas main; and*

2) *in the machinery control room or in the machinery space to indicate the oxygen content referred to in item b) 2).*

e) *Audible and visual alarms*

1) *Audible and visual alarms shall be provided, based on the system designed, to indicate:*

- *oxygen content in excess of 5% by volume (see also item e) 2));*
- *failure of the power supply to the indicating devices as referred to in item b);*
- *gas pressure less than 100 mm water gauge. The alarm arrangement shall be such as to ensure that the pressure in slop tanks in combination carriers can be monitored at all times (see also item e) 2));*
- *high-gas pressure; and*
- *failure of the power supply to the automatic control system (see also item e) 2)).*

2) *The alarms required in item e) 1) for:*

- *oxygen content*
- *gas pressure less than 100 mm water gauge, and*
- *failure of the power supply to the automatic control system,*

shall be fitted in the machinery space and cargo control room, where provided, but in each case in such a position that they are immediately received by responsible members of the crew.

3) *An audible alarm system independent of that required in item e) 1) for gas pressure less than 100 mm water gauge, or automatic shutdown of cargo pumps shall be provided to operate on predetermined limits of low pressure in the inert gas main being reached.*

The term "alarm system independent" means that a second pressure sensor, independent of the sensor serving the alarms for low pressure, high pressure and pressure indicator/recorder should be provided. Notwithstanding the above, a common programmable logic controller (PLC) should, however, be accepted for the alarms in the control system. The independent sensor should not be required if the system is arranged for the shutdown of cargo pumps. If a system for shutdown of cargo pumps is arranged, an automatic system shutting down all cargo pumps should be provided. The shutdown should be alarmed at the control station. The shutdown should not prevent the operation of ballast pumps or pumps used for bilge drainage of a cargo pump room.

4) *Two oxygen sensors shall be positioned at appropriate locations in the space or spaces containing the inert gas system. If the oxygen level falls below 19%, these sensors shall trigger alarms, which shall be both visible and audible inside and outside the space or spaces and shall be placed in such a position that they are immediately received by responsible members of the crew.*

13.2.5 Instruction manuals

Detailed instruction manuals shall be provided on board, covering the operations, safety and maintenance requirements and occupational health hazards relevant to the inert gas system and its application to the cargo tank system.

Note 1: Refer to the Revised Guidelines for inert gas systems (MSC/Circ.353), as amended by MSC/Circ.387.

The manuals shall include guidance on procedures to be followed in the event of a fault or failure of the inert gas system.

13.3 Requirements for flue gas and inert gas generator systems

13.3.1 Application

In addition to the provisions in [13.2], for inert gas systems using flue gas or inert gas generators, the provisions of this sub-article shall apply.

13.3.2 System requirements

a) Inert gas generators

1) Two fuel oil pumps shall be fitted to the inert gas generator. Suitable fuel in sufficient quantity shall be provided for the inert gas generators.

2) The inert gas generators shall be located outside the cargo tank area. Spaces containing inert gas generators shall have no direct access to accommodation service or control station spaces, but may be located in machinery spaces. If they are not located in machinery spaces, such a compartment shall be separated by a gastight steel bulkhead and/or deck from accommodation, service and control station spaces. Adequate positive-pressure-type mechanical ventilation shall be provided for such a compartment.

b) Gas regulating valves

1) A gas regulating valve shall be fitted in the inert gas main. This valve shall be automatically controlled to close, as required in [13.2.2], item b). It shall also be capable of automatically regulating the flow of inert gas to the cargo tanks unless means are provided to automatically control the inert gas flow rate.

2) The gas regulating valve shall be located at the forward bulkhead of the forward most gas-safe space through which the inert gas main passes.

c) Cooling and scrubbing arrangement

1) Means shall be fitted which will effectively cool the volume of gas specified in [13.2.1], item b) and remove solids and sulphur combustion products. The cooling water arrangements shall be such that an adequate supply of water will always be available without interfering with any essential services on the ship. Provision shall also be made for an alternative supply of cooling water.

2) Filters or equivalent devices shall be fitted to minimize the amount of water carried over to the inert gas blowers.

d) Blowers

1) At least two inert gas blowers shall be fitted and be capable of delivering to the cargo tanks at least the volume of gas required by [13.2.1], item b). For systems fitted with inert gas generators the Society may permit only one blower if that system is capable of delivering the total volume of gas required by [13.2.1], item b) to the cargo tanks, provided that sufficient spares for the blower and its prime mover are carried on board to enable any failure of the blower and its prime mover to be rectified by the ship's crew.

2) Where inert gas generators are served by positive displacement blowers, a pressure relief device shall be provided to prevent excess pressure being developed on the discharge side of the blower.

3) When two blowers are provided, the total required capacity of the inert gas system shall be divided evenly between the two and in no case is one blower to have a capacity less than 1/3 of the total required.

e) Inert gas isolating valves

For systems using flue gas, flue gas isolating valves shall be fitted in the inert gas mains between the boiler uptakes and the flue gas scrubber. These valves shall be provided with indicators to show whether they are open or shut, and precautions shall be taken to maintain them gastight and keep the seatings clear of soot. Arrangements shall be made to ensure that boiler soot blowers cannot be operated when the corresponding flue gas valve is open.

f) Prevention of flue gas leakage

1) Special consideration shall be given to the design and location of scrubber and blowers with relevant piping and fittings in order to prevent flue gas leakages into enclosed spaces.

2) To permit safe maintenance, an additional water seal or other effective means of preventing flue gas leakage shall be fitted between the flue gas isolating valves and scrubber or incorporated in the gas entry to the scrubber.

13.3.3 Indicators and alarms

a) In addition to the requirements in [13.2.4], item b), means shall be provided for continuously indicating the temperature of the inert gas at the discharge side of the system, whenever it is operating.

b) In addition to the requirements [13.2.4], item e), audible and visual alarms shall be provided to indicate:

- *insufficient fuel oil supply to the oil-fired inert gas generator;*
- *failure of the power supply to the generator;*
- *low water pressure or low water flow rate to the cooling and scrubbing arrangement;*
- *high water level in the cooling and scrubbing arrangement;*
- *high gas temperature;*
- *failure of the inert gas blowers; and*
- *low water level in the water seal.*

13.4 Requirements for nitrogen generator systems

13.4.1 Application

In addition to the provisions in [13.2], for inert gas systems using nitrogen generators, the provisions of [13.4.2] and [13.4.3] shall apply.

13.4.2 System requirements

a) *The system shall be provided with one or more compressors to generate enough positive pressure to be capable of delivering the total volume of gas required by [13.2.1], item b).*

b) *A feed air treatment system shall be fitted to remove free water, particles and traces of oil from the compressed air.*

c) *The air compressor and nitrogen generator may be installed in the engine-room or in a separate compartment. A separate compartment and any installed equipment shall be treated as an "Other machinery space" with respect to fire protection. Where a separate compartment is provided for the nitrogen generator, the compartment shall be fitted with an independent mechanical extraction ventilation system providing six air changes per hour. The compartment is to have no direct access to accommodation spaces, service spaces and control stations.*

d) *Where a nitrogen receiver or a buffer tank is installed, it may be installed in a dedicated compartment, in a separate compartment containing the air compressor and the generator, in the engine room, or in the cargo area. Where the nitrogen receiver or a buffer tank is installed in an enclosed space, the access shall be arranged only from the open deck and the access door shall open outwards. Adequate, independent mechanical ventilation, of the extraction type, shall be provided for such a compartment.*

13.4.3 Indicators and alarms

a) *In addition to the requirements in [13.2.4], item b), instrumentation is to be provided for continuously indicating the temperature and pressure of air at the suction side of the nitrogen generator.*

b) *In addition to the requirements in [13.2.4], item e), audible and visual alarms shall be provided to include:*
   - *failure of the electric heater, if fitted;*
   - *low feed-air pressure or flow from the compressor;*
   - *high-air temperature; and*
   - *high condensate level at automatic drain of water separator.*

14 Helicopter facility foam firefighting appliances

14.1 Application

14.1.1 *This Article details the specifications for foam firefighting appliances for the protection of helidecks and helicopter landing areas as required by Ch 4, Sec 10.*

14.2 Definitions

14.2.1 *D-value means the largest dimension of the helicopter used for assessment of the helideck when its rotors are turning. It establishes the required area of foam application.*

14.2.2 *Deck integrated foam nozzles are foam nozzles recessed into or edge mounted on the helideck.*

14.2.3 *Foam-making branch pipes are air-aspirating nozzles in tube shape for producing and discharging foam, usually in straight stream only.*

14.2.4 *Hose reel foam station is a hose reel fitted with a foam-making branch pipe and non-collapsible hose, together with fixed foam proportioner and fixed foam concentrate tank, mounted on a common frame.*

14.2.5 *Monitor foam station is a foam monitor, either self-inducing or together with separate fixed foam proportioner, and fixed foam concentrate tank, mounted on a common frame.*

14.2.6 *Obstacle free sector is the take-off and approach sector which totally encompasses the safe landing area and extends over a sector of at least 210°, within which only specified obstacles are permitted.*

14.2.7 *Limited obstacle sector is a 150° sector outside the take-off and approach sector that extends outward from a helideck where objects of limited height are permitted.*

14.3 Engineering specifications for helidecks and helicopter landing areas

14.3.1 *The system shall be capable of manual release, and may be arranged for automatic release.*

14.3.2 *For helidecks the foam system shall contain at least two fixed foam monitors or deck integrated foam nozzles. In addition, at least two hose reels fitted with a foam-making branch pipe and non-collapsible hose sufficient to reach any part of the helideck shall be provided. The minimum foam system discharge rate shall be determined by multiplying the D-value area by 6 l/min/m^2. The minimum foam system discharge rate for deck integrated foam nozzle systems shall be determined by multiplying the overall helideck area by 6 l/min/m^2. Each monitor shall be capable of supplying at least 50% of the minimum foam system discharge rate, but not less than 500 l/min. The minimum discharge rate of each hose reel shall be at least 400 l/min.*

The quantity of foam concentrate shall be adequate to allow operation of all connected discharge devices for at least 5 min.

14.3.3 *Where foam monitors are installed, the distance from the monitor to the farthest extremity of the protected area shall be not more than 75% of the monitor throw in still air conditions.*

14.3.4 *For helicopter landing areas, at least two portable foam applicators or two hose reel foam stations shall be provided, each capable of discharging a minimum foam solution discharge rate, in accordance with Tab 5.*

The quantity of foam concentrate shall be adequate to allow operation of all connected discharge devices for at least 10 min. For tankers fitted with a deck foam system, the Society may consider an alternative arrangement, taking into account the type of foam concentrate to be used.

Table 5 : Foam discharge rates

Cat.	Helicopter overall length (D-value)	Minimum foam solution discharge rate, in l/min
H1	up to but not including 15 m	250
H2	from 15 m up to but not including 24 m	500
H3	from 24 m up to but not including 35 m	800

14.3.5 *Manual release stations capable of starting necessary pumps and opening required valves, including the fire main system, if used for water supply, shall be located at each monitor and hose reel. In addition, a central manual release station shall be provided at a protected location. The foam system shall be designed to discharge foam with nominal flow and at design pressure from any connected discharge devices within 30 s of activation.*

14.3.6 *Activation of any manual release station shall initiate the flow of foam solution to all connected hose reels, monitors, and deck integrated foam nozzles.*

14.3.7 *The system and its components shall be designed to withstand ambient temperature changes, vibration, humidity, shock impact and corrosion normally encountered on the open deck, and shall be manufactured and tested to the satisfaction of the Society.*

14.3.8 *A minimum nozzle throw of at least 15 m shall be provided with all hose reels and monitors discharging foam simultaneously. The discharge pressure, flow rate and discharge pattern of deck integrated foam nozzles shall be to the satisfaction of the Society, based on tests that demonstrate the nozzle's capability to extinguish fires involving the largest size helicopter for which the helideck is designed.*

14.3.9 *Monitors, foam-making branch pipes, deck integrated foam nozzles and couplings shall be constructed of brass, bronze or stainless steel. Piping, fittings and related components, except gaskets, shall be designed to withstand exposure to temperatures up to 925°C.*

14.3.10 *The foam concentrate shall be demonstrated effective for extinguishing aviation fuel spill fires and* is to be approved based on IMO Circular MSC.1/Circ.1312 or International Civil Aviation Organization - Airport Services Manual, Part 1 - Rescue and Firefighting, Chapter 8 - Extinguishing Agent Characteristics, Paragraph 8.1.5 - Foam Specifications Table 8-1, Level "B" foam. *Where the foam storage tank is on the exposed deck, freeze protected foam concentrates shall be used, if appropriate, for the area of operation.*

14.3.11 *Any foam system equipment installed within the take-off and approach obstacle-free sector shall not exceed a height of 0.25 m. Any foam system equipment installed in the limited obstacle sector shall not exceed the height permitted for objects in this area.*

14.3.12 *All manual release stations, monitor foam stations, hose reel foam stations, hose reels and monitors shall be provided with a means of access that does not require travel across the helideck or helicopter landing area.*

14.3.13 *Oscillating monitors, if used, shall be pre-set to discharge foam in a spray pattern and have a means of disengaging the oscillating mechanism to allow rapid conversion to manual operation.*

14.3.14 *If a foam monitor with flow rate up to 1000 l/min is installed, it shall be equipped with an air-aspirating nozzle. If a deck integrated nozzle system is installed, then the additionally installed hose reel shall be equipped with an air-aspirating handline nozzle (foam branch pipes). Use of non-air-aspirating foam nozzles (on both monitors and the additional hose reel) is permitted only where foam monitors with a flow rate above 1000 l/min are installed. If only portable foam applicators or hose reel stations are provided, these shall be equipped with an air-aspirating handline nozzle (foam branch pipes).*

BUREAU VERITAS MARINE & OFFSHORE

Tour Alto
4 place des Saisons
92400 Courbevoie - France
+33 (0)1 55 24 70 00

marine-offshore.bureauveritas.com/rules-guidelines

© **2025 BUREAU VERITAS** - All rights reserved

BUREAU VERITAS

Shaping a World of Trust