Project Title: Smart Cart: A Smart Semi-Automated Low Cost and Green Energy Based Cart for Selling Goods

Session: 2020 – 2024

Submitted by:

Muhammad Abdullah 2020-CE-02

Umer Irshad 2020-CE-03

Ahmad Zafar 2020-CE-12

Muhammad Hussnain 2020-CE-51

Supervised by:

Muhammad Asim Rehmat, PhD

Department of Computer Engineering

University of Engineering and Technology

Lahore Pakistan

Project Title: Smart Cart: A Smart Semi-Automated Low Cost and Green Energy Based Cart for Selling Goods

(Session 2020 Computer Engineering)

The thesis is to be submitted to the Department of Computer Engineering, University of Engineering and Technology, Lahore for the partial fulfillment of the requirement for the Bachelors degree in Computer Engineering.

Internal Examiner
Signature:

Name:

Designation:

External Examiner
Signature:

Name:

Designation:

Chairman
Signature:

Prof. Ali Hammad

Dean
Signature:

Name:

Department of Computer Engineering

University of Engineering and Technology

Lahore Pakistan

Declaration

I declare that the work contained in this thesis is my own, except where explicitly stated otherwise. In addition this work has not been submitted to obtain another degree or professional qualification.

Signed: _____

Date: _____

Acknowledgments

First of all, we wish to thank the Almighty Allah for giving us strength in fulfilling this work. It gives us great pleasure to express our deep sense of gratitude and respect to our supervisor, Dr. Asim Rehmat who has been a true inspiration and a mentor for us in completing this project. Last but not least we would like to thank our parents for their unconditional love, kind cooperation, encouragement and support that has helped us since the beginning of this project ...

To our parents and all citizens of Pakistan...

Contents

Acknowledgments iii

List of Figures viii

Abbreviations x

Abstract xi

1 Introduction 1
- 1.1 Overview . . . 1
- 1.2 Background . . . 1
- 1.3 Motivation . . . 2
  - 1.3.1 Survey . . . 2
  - 1.3.2 Solutions . . . 2
  - 1.3.3 Conclusion . . . 3
- 1.4 Objectives . . . 3
  - 1.4.1 Affordable Transportation . . . 3
  - 1.4.2 Promotion of Green Energy . . . 3
  - 1.4.3 Service Based App . . . 3
  - 1.4.4 Business Transformation . . . 4
  - 1.4.5 Increased Mobility . . . 4
- 1.5 Feasibility . . . 4
  - 1.5.1 Technical . . . 4
  - 1.5.2 Financial . . . 4
  - 1.5.3 Market Feasibility . . . 4
  - 1.5.4 Operational . . . 4
  - 1.5.5 Legal . . . 5
  - 1.5.6 Conclusion . . . 5
- 1.6 Problem Statement . . . 5
  - 1.6.1 Operational Inefficiencies . . . 5
  - 1.6.2 High Operating Costs . . . 5
- 1.7 Scope . . . 5
  - 1.7.1 Cost-Effective Electric Vehicle . . . 6
  - 1.7.2 Road Sign Detection for Semi-Autonomous . . . 6
  - 1.7.3 Service Based App . . . 6

1.8 Challenges . . . 6
1.8.1 Technical . . . 6
1.8.2 Non-Technical . . . 8

2 Literature Review **10**
2.1 Cost Effective Electric Vehicle . . . 10
2.1.1 Types of Electric Motors . . . 10
2.1.2 Control Algorithms . . . 12
2.1.3 Sine Wave Generation . . . 16
2.1.4 Sensored Control . . . 17
2.1.5 Trapezoidal Control . . . 19
2.2 Road Sign Detection . . . 20
2.2.1 YOLO . . . 20
2.2.2 Image Processing Techniques . . . 23
2.2.3 SIFT . . . 25
2.2.4 ORB . . . 27
2.3 Literature Survey . . . 29
2.3.1 Cost Effective Electric Vehicle . . . 29
2.3.2 Road Sign Detection . . . 32

3 Implementation **34**
3.1 Cost-Effective Electric Vehicle . . . 34
3.1.1 Motor . . . 35
3.1.2 Motor Controller . . . 37
3.1.2.1 Circuit Design . . . 37
3.1.2.2 Firmware . . . 47
3.1.2.3 Use Cases . . . 52
3.1.3 Chassis . . . 52
3.1.4 Charging System . . . 53
3.1.5 System Integration . . . 54
3.2 Road Sign Detection and Classification . . . 54
3.2.1 Detection . . . 54
3.2.2 Classification . . . 57
3.3 Service Based App . . . 61
3.3.1 Tools and Technologies . . . 61
3.3.1.1 React Native . . . 61
3.3.1.2 Expo Server . . . 62
3.3.2 Functionalities of the App . . . 62
3.3.2.1 SignIn/SignUp . . . 62
3.3.2.2 Map and Seller Tracking . . . 63
3.3.2.3 Order Placement and Cart . . . 64
3.3.2.4 Profile . . . 65
3.3.2.5 Order and Delivery Tracking . . . 66
3.3.2.6 Inventory Management . . . 67

3.3.3 User Flow Diagram 68

4 Conclusion **69**
4.1 Thesis Statement 69
4.2 Key Findings 69
4.2.1 Efficiency of the System 69
4.2.1.1 Type of the Motor 69
4.2.1.2 Sensors 69
4.2.1.3 Control Algorithm 70
4.2.1.4 Mosfet Selection 70
4.2.2 Battery System 70
4.2.3 Service Based App 71
4.2.3.1 Connectivity 71
4.2.3.2 Integral Part of the System 71
4.3 Limitations 71
4.3.1 Lack of Efficient Components 71
4.3.2 Government Policies 71
4.3.3 Lack of Knowledge 71

5 Future Work **72**
5.1 Electrical Design 72
5.1.1 Enhancing Inverter Efficiency 72
5.1.1.1 Improving Firmware 72
5.1.1.2 Improved Mosfets 72
5.1.1.3 Efficient PCB Layout 72
5.1.2 Enhanced Power and Battery Backup 72
5.1.3 Improvement of Parametrization of Inverter 73
5.2 Computer Vision 73
5.2.1 Enhancing Road Sign Detection 73
5.2.2 Utilizing Computer Vision for Lane Change Indication . . . 73
5.2.3 Detecting Obstacles and Potholes 74
5.2.4 Providing Feedback to the Controller 74
5.3 Service Based Application 74
5.3.1 Enhancing Buyer Side Features 74
5.3.2 Improving Live Location Accuracy 74
5.3.3 UI/UX Design Optimization 75

References **76**

List of Figures

2.1 PMSM 11
2.2 Induction Motor 11
2.3 BLDC Motor 12
2.4 Field Oriented Control 12
2.5 DIrect Torque Control 13
2.6 SVM 13
2.7 PID Control 14
2.8 V/F Control 15
2.9 Enter Caption 17
2.10 Enter Caption 18
2.11 Trapezoidal Control 20
2.12 YOLO Workflow 21
2.13 RCNN 23
2.14 Color Threshold 23
2.15 Edge Detection 24
2.16 Enter Caption 24
2.17 Corner Detection 25
2.18 Interest Points 26
2.19 Enter Caption 27
2.20 Fast Algorithm 28
2.21 BRIEF Algorithm 28

3.1 Electrical System 34
3.2 120 Degree Phase Shift 35
3.3 40 Degrees Phase Shift 35
3.4 Y-Configuration of Coils 36
3.5 Pole Pairs of Motor 36
3.6 3-Phase Bridge 37
3.7 3-Phase Output Waves 38
3.8 Working of a Mosfet 38
3.9 Parallel Mosfets 40
3.10 75n75 Mosfet 40
3.11 IRF4110 Mosfet 40
3.12 Gate Resistance with a Mosfet 41
3.13 Turning On and Off of a Mosfet 42

3.14 $3_{phaseBridgeInverter}$ 42
3.15 Bootstrap Circuit 43
3.16 IR2110 Features 44
3.17 IR2110 Functional Block Diagram 44
3.18 Voltage Drop Across Pin Vs 44
3.19 Protection Circuit for IR2110 45
3.20 Gate Driver Circuit 45
3.21 ESP32 Pinout 46
3.22 LM35 Pinout 46
3.23 LM35 Features 47
3.24 ACS 758 47
3.25 Enter Caption 48
3.26 Sine Wave with PWM 49
3.27 Input RPM Formula 49
3.28 vf Curve 51
3.29 PID Control of motor 51
3.30 Firmware Flowchart 52
3.31 Usecase Diagram 53
3.32 System Diagram for Electric Vehicle 54
3.33 Difference Between HSV and RGB 55
3.34 RGB Frame 55
3.35 HSV Image 56
3.36 Red Masking 56
3.37 Bounding Box on Road Sign 57
3.38 Cropped Image 58
3.39 Inside Black and White Part 58
3.40 Black and White portion 59
3.41 ORB Matches 60
3.42 ORB Matches 60
3.43 Misclassified 61
3.44 Correct Classification 61
3.45 SignIn/SignUp 62
3.46 Map 63
3.47 Order Screen 64
3.48 Profile Screen 65
3.49 Order History 66
3.50 Inventory 67
3.51 User Flow Diagram 68

Abbreviations

DC	**Direct Current**
AC	**Alternating Current**
BLDC	**Brushless DC Motor**
PMSM	**Permanent Magnet Synchronous Machine**
MOSFET	**Metal Oxide Field Effect Transistor**
PWM	**Pulse Width Modulation**
SVM	**Space Vector Modulation**
FOC	**Field Oriented Control**
VFD	**Variable Frequency Drive**
V/F	**Voltage / Frequency**
RPM	**Rotations Per Minute**
ORB	**Oriented Fast and Rotated Brief**
SIFT	**Scale Invariant Feature Transform**

Abstract

SmartCart is a solution based project meant for the street vendors. It is an innovative and eco-friendly approach to solve the problem of low income of street vendors. Using the unique and smart combination of Electric Vehicles and a mobile app for the vendors to sell goods online, this system provides a seamless and cost effective solution which nobody has seen before. This abstract discusses the technologies used to develop such a system and its impact on the vendor's business.

Chapter 1

Introduction

1.1 Overview

In Pakistan, a significant number of people earn their livelihood by selling various items from carts. These carts serve as mobile shops and offer a diverse range of products, including food items and beverages, fresh fruits and vegetables, clothing and accessories, toys, and utensils and cookware.

Unfortunately, the living conditions for these cart vendors can be extremely challenging. Many of them rely on carts that lack any means of self-propulsion. As a result, these vendors have to physically move their carts throughout the day. This manual labor not only puts a strain on their bodies but also limits their ability to effectively sell their products. The constant need to push or pull the cart consumes their time and energy, leaving them with fewer opportunities to engage with potential customers and promote their merchandise.

For those vendors who have carts with hydrocarbon fuel engines, a significant portion of their earnings is spent on purchasing fuel. Rising fuel prices add to their financial burden, reducing their profit margins. The cost of running the cart becomes a substantial expense that affects their overall income.

1.2 Background

The difficult circumstances experienced by cart vendors not only impact them physically but also take a toll on their mental well-being. The strenuous physical labor, combined with financial hardships and limited growth opportunities, can lead to feelings of exhaustion, frustration, and hopelessness.

Moreover, vendors often face difficulties in determining the demand and interest for their products in specific areas. As a result, they may transport their goods

to locations where there is a lack of potential customers. This situation leads to a waste of valuable time and resources as their efforts go unnoticed due to a lack of awareness about people's preferences and interests in different areas.

Another significant concern related to cart vending in Pakistan is the high dependency on carts or vehicles that burn hydrocarbon fuels for propulsion. The widespread use of such vehicles significantly contributes to carbon emissions, posing a threat to the climate and environment. The negative environmental impact of this practice necessitates the exploration of sustainable alternatives to minimize pollution and promote a greener approach to cart vending.

Overall, the culture of selling goods on carts involves a large number of people in Pakistan. However, numerous issues persist within this system. These include the lack of safety and monitoring mechanisms, particularly for female vendors, difficulties in identifying market demand in different areas, and the environmental impact of using hydrocarbon-fueled carts. Addressing these challenges and finding solutions is crucial to ensure the well-being, safety, and sustainability of the cart vending community in Pakistan.

1.3 Motivation

1.3.1 Survey

The total number of street vendors operating on streets or roads across Pakistan is 753,690 (around 1.22 percent of the total employed labour force) who are either stall and salespersons, street food salespersons, or street vendors (excluding food). Given the challenges faced by cart vendors, it is imperative to find a low-cost solution that allows them to transport their goods without the need for manual effort in driving the vehicle or cart.

1.3.2 Solutions

- **The Operating Costs** of the carts or vehicles used by vendors should be kept at a minimum to reduce commuting expenses and increase profit margins. By implementing such solutions, we can uplift the living standards of vendors who sell household items and other goods, ultimately contributing to their prosperity, as well as their physical and mental well-being.

- In addition to data analytics, it is crucial to explore **green energy alternatives** for the conventional means of commuting used by cart vendors. By adopting sustainable transportation solutions powered by renewable energy sources, such as solar or electric power, we can eliminate carbon emissions

and minimize the environmental impact. This transition to green energy would not only contribute to reversing the effects of climate change but also foster a cleaner and healthier environment for the vendors and the communities they serve.

- Moreover, the implementation of a data analytics system can greatly benefit the vendors. This system would provide insights into the demand for specific items in different areas. By analyzing this data, vendors can make **informed decisions** about which goods to carry in their carts for a particular location. This would help them optimize their resources, saving time and reducing wastage of efforts on items that have limited demand in a specific area. Ultimately, the data-driven approach would enhance the efficiency and profitability of the vendors' businesses.

1.3.3 Conclusion

By addressing these key aspects and implementing the proposed solutions, we can create a more conducive and supportive environment for cart vendors in Pakistan. This would not only uplift their livelihoods but also promote their overall well-being, ensuring their safety, financial stability, and ecological sustainability.

1.4 Objectives

1.4.1 Affordable Transportation

The most important and emphasized objective of this project is to provide people with affordable means of transportation by making the operating cost of the **SmartCart** low.

1.4.2 Promotion of Green Energy

Promotion of green energy and environment sustainability is an objective of this project which will be using green energy to power the **SmartCart**. This will also reduce reliance on traditional gasoline or diesel powered transportation option which is currently widely used for different kinds of transportation purposes. The usage of renewable source of energy will immensely contribute in decreasing carbon footprint in the environment.

1.4.3 Service Based App

In this project a Service based app will be developed which will allow SmartCart users to provide their services to people in a much better and manageable way.

1.4.4 Business Transformation

A key objective of this project is to transform the business of the vendors by providing them data insights and through these insights they will make informed decisions about their business. This will enable them to effectively choose which item to carry to a specific area and which to leave behind.

1.4.5 Increased Mobility

The proposed project will be providing means for increased mobility of several kinds of vendors resulting in better business outreach.

1.5 Feasibility

1.5.1 Technical

The technical feasibility of the project is high. It uses solar energy, making it an eco-friendly solution. The solar panel system installed in the SmartCart generates electricity to power the vehicle's motor and battery. The Universal Cart is designed to accommodate various types of goods and materials, making it suitable for different types of vendors. The service-based app is easy to use and can be downloaded on a mobile phone, making it accessible to all.

1.5.2 Financial

The project is economically feasible. The cost of the system is lower than traditional transport vehicles. The use of solar energy reduces fuel costs, making it more affordable to operate. The service-based app offers vendors access to a wider customer base, increasing their earnings and improving their financial condition.

1.5.3 Market Feasibility

The project has a high market feasibility. It caters to a large market of poor vendors who are in need of affordable and eco-friendly transportation solutions. The Universal Cart offers a versatile solution to carry different types of goods, which can be appealing to a variety of vendors. The service-based app can help vendors expand their customer base and offer a convenient way for customers to purchase goods.

1.5.4 Operational

The operational feasibility of the project is high. It is easy to operate, and the service-based app is user-friendly. The solar panel system requires little maintenance and has a long lifespan, making it a reliable and cost-effective solution.

1.5.5 Legal

The project is legally feasible. The SmartCart complies with all relevant laws and regulations, including those relating to the use of solar energy and transportation of goods.

1.5.6 Conclusion

The SmartCart is a feasible and innovative solution that can improve the financial condition of poor vendors while also promoting sustainability. The technical, economic, market, operational, and legal feasibility analyses all demonstrate that the project is viable and has the potential to make a positive impact on the lives of vendors and the environment.

1.6 Problem Statement

The cart vending industry in Pakistan faces numerous challenges that hinder the well-being and prosperity of cart vendors. These challenges include operational inefficiencies and high operating costs. The absence of a comprehensive solution exacerbates these issues, making it difficult for vendors to earn a sustainable income and improve their living standards.

1.6.1 Operational Inefficiencies

Cart vendors often face challenges in determining the demand for their products in specific areas. This leads to inefficiencies as they transport goods to locations with limited or no potential customers, resulting in wasted time, effort, and resources. The absence of data insights and analytics makes it difficult for vendors to make informed decisions regarding their inventory and optimize their operations.

1.6.2 High Operating Costs

A significant portion of vendors' earnings is spent on fuel for their carts, contributing to their high operating costs. The reliance on hydrocarbon-fueled carts not only drains their financial resources but also contributes to carbon emissions, posing a threat to the environment. The lack of low-cost alternatives hinders vendors' ability to increase their profit margins and invest in their businesses.

1.7 Scope

Our project, **SmartCart**, aims to revolutionize the cart vending industry by developing a low-cost smart cart powered by green energy sources. This innovative

solution will not only minimize operational costs but also provide a range of benefits for vendors, such as valuable data insights about their sales in specific areas, semi autonomous features and business expansion capability.

Following are the main parts of the project:

1.7.1 Cost-Effective Electric Vehicle

This involves the design and development of an electric vehicle optimized for cost-effectiveness and universal application in transporting goods. The vehicle will be equipped with charging capabilities compatible with standard chargers and supplemented by a solar panel for additional energy generation. Its design will prioritize versatility to accommodate various types of goods efficiently.

1.7.2 Road Sign Detection for Semi-Autonomous

This component focuses on integrating semi-autonomous features into the electric vehicle, specifically targeting road sign detection and classification. Through advanced computer vision and machine learning algorithms, the vehicle will be able to recognize and interpret road signs, enhancing safety and navigation capabilities for the driver.

1.7.3 Service Based App

The project includes the development of a service-based application tailored for vendors to facilitate sales from the electric cart. This app will enable vendors to receive orders from different buyers, manage inventory, track sales, and provide a seamless purchasing experience. It will serve as a digital platform connecting vendors with potential customers, optimizing sales opportunities and enhancing operational efficiency.

1.8 Challenges

1.8.1 Technical

Electric Vehicle Design and Development: Designing an electric vehicle optimized for cost-effectiveness while ensuring it can efficiently transport goods is a complex task. It involves considerations such as battery capacity, motor efficiency, durability, and weight distribution. Additionally, integrating a solar panel for supplementary energy generation requires careful engineering to maximize energy output while maintaining the vehicle's functionality and aesthetics.

Charging Infrastructure: Implementing a charging infrastructure compatible with standard chargers is crucial for the widespread adoption of electric carts. This involves establishing charging stations in strategic locations accessible to vendors. Ensuring the reliability and accessibility of these charging stations, especially in areas with limited infrastructure, poses a significant challenge.

Charging Infrastructure: Implementing a charging infrastructure compatible with standard chargers is crucial for the widespread adoption of electric carts. This involves establishing charging stations in strategic locations accessible to vendors. Ensuring the reliability and accessibility of these charging stations, especially in areas with limited infrastructure, poses a significant challenge.

Road Sign Detection and Classification: Integrating semi-autonomous features for road sign detection and classification requires advanced computer vision and machine learning algorithms. Developing robust algorithms capable of accurately detecting and interpreting various road signs in real-time, considering factors such as weather conditions, lighting, and occlusions, presents a considerable technical challenge.

Service-Based App Development: Developing a service-based application tailored for vendors involves various technical challenges, including user interface design, backend infrastructure setup, data management, and security considerations. Ensuring the app is intuitive, responsive, and scalable to accommodate a growing user base while maintaining data privacy and security standards requires meticulous planning and execution.

Integration and Compatibility: Ensuring seamless integration and compatibility among the different components of the project, including the electric vehicle, semi-autonomous features, and the service-based app, is essential for the overall success of the solution. Coordinating the development efforts, testing for interoperability, and resolving compatibility issues require effective project management and collaboration among multidisciplinary teams.

Environmental Impact and Sustainability: While the project aims to address environmental concerns by introducing green energy sources and reducing carbon emissions, ensuring the overall sustainability of the solution

requires careful lifecycle analysis. Evaluating the environmental impact of production, usage, and disposal of components, as well as considering factors such as materials sourcing and end-of-life recycling, is essential for minimizing environmental footprint and promoting long-term sustainability.

1.8.2 Non-Technical

- **Regulatory and Legal Hurdles**: Implementing new technologies and business models often requires navigating complex regulatory frameworks and obtaining necessary permits and approvals. In the case of the SmartCart project, ensuring compliance with transportation regulations, safety standards, and environmental regulations may pose challenges. Additionally, addressing potential legal issues related to intellectual property rights, liability, and data privacy requires careful consideration and legal expertise.

- **Cultural and Social Acceptance:** Introducing innovative solutions like electric carts and mobile apps may face resistance or skepticism from traditional stakeholders in the cart vending industry. Convincing vendors, consumers, and other stakeholders of the benefits and feasibility of the SmartCart solution requires effective communication, community engagement, and possibly cultural adaptation of the technology and business model to align with local norms and preferences.

- **Financial Viability and Funding**: Developing and deploying the SmartCart solution requires significant financial investment for research and development, infrastructure setup, manufacturing, and market rollout. Securing funding from investors, government grants, or other sources may be challenging, especially in regions with limited access to capital or where investors are cautious about investing in emerging technologies or unfamiliar markets. Developing a sustainable business model that generates revenue and attracts investment is essential for the long-term viability of the project.

- **Market Adoption and User Behavior:** Encouraging adoption of the SmartCart solution among cart vendors and consumers requires addressing barriers such as inertia, skepticism, and lack of awareness. Convincing vendors to transition from conventional carts to electric carts and adopt new digital tools like mobile apps may require incentives, training, and ongoing support. Understanding and influencing user behavior, preferences, and purchasing decisions through targeted marketing, education, and user experience design are critical for achieving widespread adoption and success.

- **Infrastructure and Connectivity:** Access to reliable infrastructure, including electricity, internet connectivity, and transportation networks, is essential for the effective deployment and operation of the SmartCart solution. In regions with inadequate infrastructure or uneven connectivity, ensuring reliable access to charging stations, data networks, and logistical support may be challenging. Addressing infrastructure gaps and collaborating with local authorities and service providers to improve infrastructure can facilitate the successful implementation of the project.

- **Stakeholder Engagement and Collaboration:** Engaging and collaborating with various stakeholders, including government agencies, local authorities, community organizations, vendors associations, and technology partners, is crucial for overcoming barriers and gaining support for the SmartCart project. Building trust, fostering partnerships, and aligning interests among diverse stakeholders require effective communication, negotiation, and relationship management skills.

Chapter 2

Literature Review

2.1 Cost Effective Electric Vehicle

An electric vehicle is mainly divided into following parts:

- Chassis
- Electric Motor
- Motor Controller
- Batteries
- Charging System

  There are only two main components which we have worked on in our scope. The motor controller and prototype charging system. For the development of a motor controller, the type of the motor should be selected first. Following are the main type of motors currently used in the EV industry:

2.1.1 Types of Electric Motors

- **PMSM**
  - PMSMs use permanent magnets embedded in the rotor to create a magnetic field. They offer high efficiency, good power density, and precise control.
  - These motors are widely used in electric vehicles due to their high efficiency over a wide range of operating speeds and torque.
  -

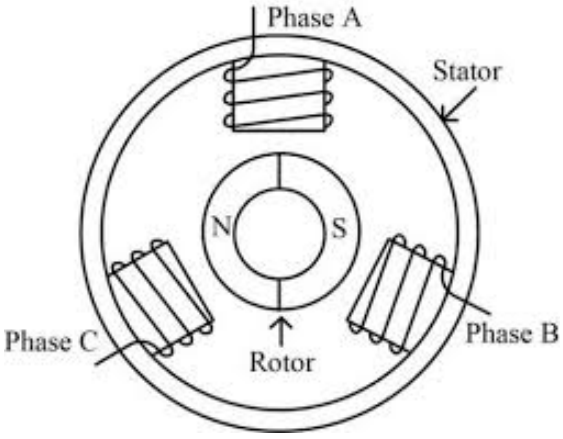

FIGURE 2.1: PMSM

- **Induction Motor**
  - Induction motors operate using electromagnetic induction to generate a rotating magnetic field. They do not require permanent magnets in the rotor.
  - While less efficient than PMSMs, induction motors are simpler in design and typically more cost-effective. They are often used in electric vehicles where cost is a significant factor.

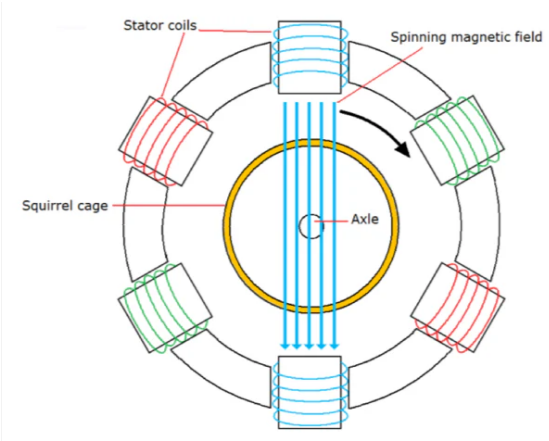

FIGURE 2.2: Induction Motor

  -

- **BLDC**
  - BLDC motors use electronic commutation to control the stator windings and generate torque. They feature high efficiency, reliability, and low maintenance due to the absence of brushes.

– BLDC motors are commonly used in electric vehicles, particularly in applications where high power density and smooth operation are required, such as electric motorcycles and scooters.

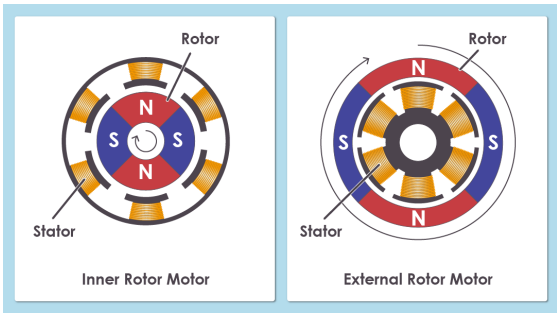

FIGURE 2.3: BLDC Motor

–

2.1.2 Control Algorithms

- **FOC**
  - FOC, also known as vector control, is a sophisticated control algorithm widely used in Permanent Magnet Synchronous Motors (PMSM) and Brushless DC Motors (BLDC).
  - It involves transforming the three-phase stator currents and voltages into a two-coordinate rotating reference frame, known as the dq-frame, aligned with the rotor flux vector.
  - By controlling the components of current in this reference frame, FOC enables precise control of torque and flux, allowing for high efficiency and dynamic performance over a wide speed range.

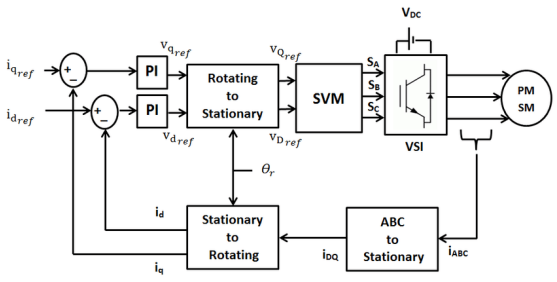

FIGURE 2.4: Field Oriented Control

–

- **Direct Torque Control**

- DTC is another control strategy used primarily in induction motors and Permanent Magnet Synchronous Motors (PMSM).
- Unlike FOC, DTC directly controls torque and flux without the need for coordinate transformations. It achieves this by selecting the optimal voltage vector from a predefined set based on the error between the desired and estimated torque and flux.
- DTC offers fast dynamic response and simplicity in implementation, making it suitable for applications where rapid torque control is essential.

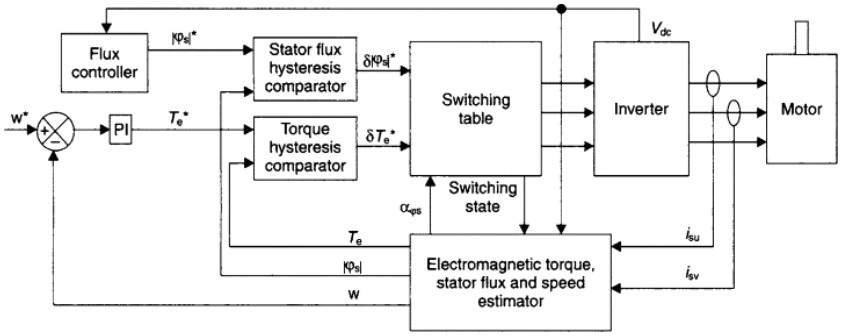

FIGURE 2.5: DIrect Torque Control

-

- **Space Vector Modulation**
  - SVM is a modulation technique used to control the switching of power electronic devices, such as inverters, in electric motor drives.
  - It involves generating reference voltage vectors in a two-dimensional space and selecting the closest switching states to approximate these vectors.
  - SVM is commonly used in conjunction with FOC or DTC to achieve precise control of motor currents and voltages while minimizing harmonics and torque ripple.

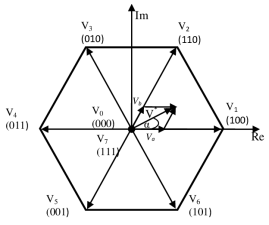

FIGURE 2.6: SVM

-

- **Sensorless Control**
  - Sensorless control algorithms eliminate the need for position and speed sensors by estimating rotor position and speed based on measurements of motor currents and voltages.
  - Various techniques, such as observer-based methods (e.g., Extended Kalman Filter), back EMF estimation, and model-based algorithms, are used to estimate rotor position and speed accurately.
  - Sensorless control reduces system cost and complexity while maintaining adequate control performance, making it particularly attractive for cost-sensitive applications like electric vehicles.
- **PID Control**
  - PID control is a classical control technique widely used for motor speed and position control.
  - In PID control, the control action is based on the proportional, integral, and derivative terms of the error signal between the desired and actual motor speed or position.
  - While not as sophisticated as FOC or DTC, PID control is simple to implement and can provide satisfactory performance for certain motor control applications, particularly in systems where accurate speed or position control is not critical.

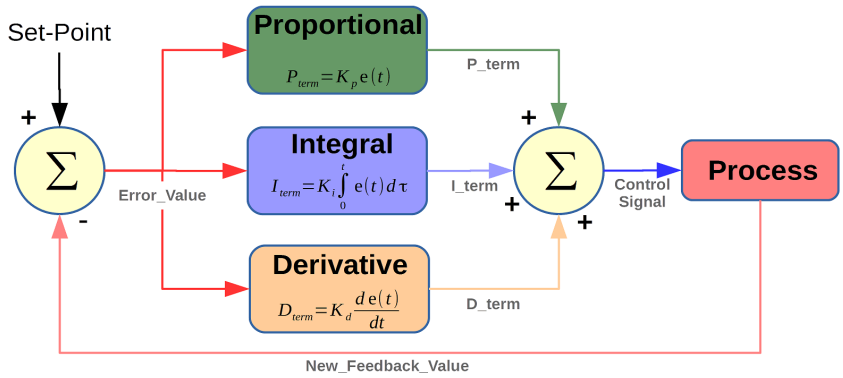

FIGURE 2.7: PID Control

  -

- **V/F Control**
  - Voltage/frequency (V/f) control is a simple and widely used method for controlling the speed of Permanent Magnet Synchronous Motors

(PMSM). In V/f control, the amplitude of the voltage supplied to the motor is varied proportionally to the desired frequency of the input voltage, hence the name V/f control. This method is based on the principle that the electromagnetic torque produced by the motor is proportional to the square of the voltage and inversely proportional to the frequency.

Here's how V/f control works for a PMSM:

- **Start-Up**: When starting the motor, a fixed voltage-to-frequency ratio is applied to the motor terminals. This ensures that the motor starts smoothly and accelerates gradually.
- **Speed Control**: To control the speed of the motor, the frequency of the input voltage is adjusted while maintaining a constant voltage-to-frequency ratio. As the frequency increases, the motor speed also increases proportionally.
- **Torque Control**: V/f control inherently provides a means of controlling the torque of the motor. By adjusting the voltage magnitude, the torque produced by the motor can be controlled without directly measuring the current or implementing complex control algorithms.
- **Stability**: V/f control provides stable operation over a wide speed range. However, at low speeds, the voltage supplied to the motor must be increased to compensate for the decrease in back electromotive force (EMF) due to the slower rotor speed. This requires careful tuning to ensure stable operation and prevent overheating of the motor at low speeds.

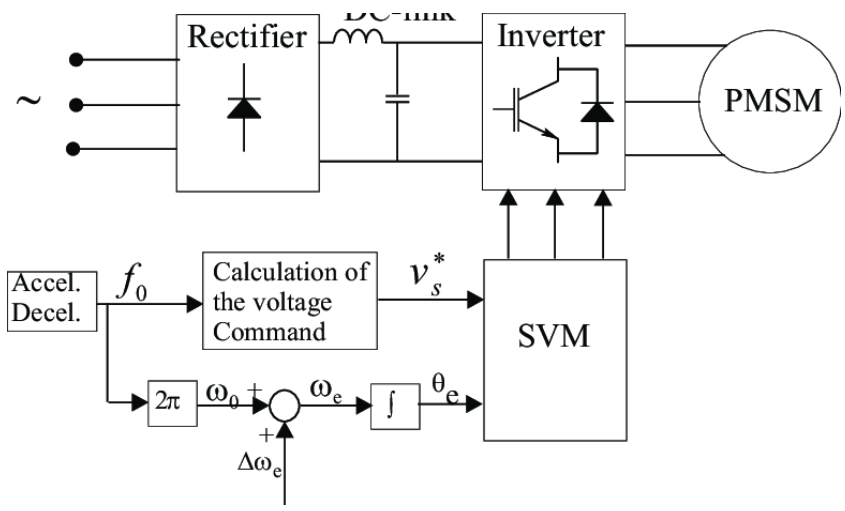

FIGURE 2.8: V/F Control

–

2.1.3 Sine Wave Generation

To generate a sine wave using a microcontroller's PWM (Pulse Width Modulation) feature, you can use a technique called Pulse Width Modulation (PWM) with a lookup table. Here's a basic overview of the process:

1. **Create a Sine Wave Lookup Table**: First, you need to create a lookup table that contains the values of a sine wave. This table will consist of discrete amplitude values representing the sine wave at different points in its cycle. The table should cover a full cycle (360 degrees or 2 radians) with enough resolution to produce a smooth sine wave. Typically, the table is stored in the microcontroller's memory.

2. **PWM Generation:** Configure one of the microcontroller's PWM channels to output a square wave. The frequency of this square wave will determine the frequency of the generated sine wave, while the duty cycle will control the amplitude.

3. **Lookup Table Indexing**: Set up a timer interrupt to trigger at regular intervals corresponding to the desired frequency of the sine wave. In the interrupt service routine (ISR), increment a phase accumulator variable by a fixed increment. This variable represents the phase of the sine wave and will be used to index into the lookup table.

4. **Output Generation:** Use the value of the phase accumulator to index into the sine wave lookup table. The value obtained from the table represents the instantaneous amplitude of the sine wave at that phase angle. Scale this value appropriately to match the desired amplitude range for the PWM output.

5. **Output to PWM:** Write the scaled amplitude value to the PWM duty cycle register. This will modulate the width of the PWM pulse, effectively generating a PWM signal that approximates a sine wave.

6. **Repeat**: Continuously repeat steps 3 to 5 to generate a continuous sine wave output.

By varying the frequency of the PWM signal and adjusting the lookup table values, you can generate sine waves of different frequencies and amplitudes. However, it's

worth noting that this method provides an approximation of a sine wave and may introduce some distortion, especially at higher frequencies or when using a limited resolution lookup table. For more precise sine wave generation, you may consider using dedicated hardware or specialized algorithms.

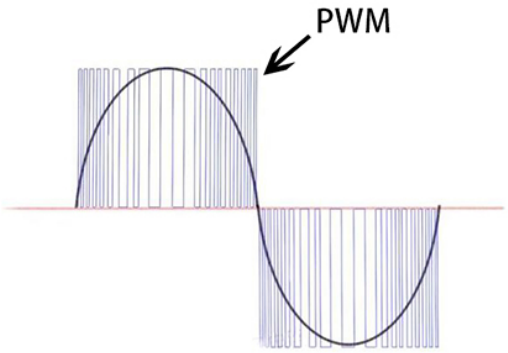

FIGURE 2.9: Enter Caption

2.1.4 Sensored Control

Sensored control is a method used to control Brushless DC Motors (BLDC) and Permanent Magnet Synchronous Motors (PMSM) by utilizing sensors to measure the rotor position. By accurately determining the rotor position, sensored control allows for precise control of motor commutation, resulting in smoother operation, higher efficiency, and improved performance. Here's an explanation of sensored control for both BLDC and PMSM:

1. **Hall Effect Sensors**: BLDC motors typically use Hall Effect sensors mounted on the motor stator to detect the rotor position. These sensors provide feedback signals indicating the magnetic pole positions of the rotor as it rotates.

2. **Sensor Placement:** Hall Effect sensors are usually placed at equally spaced intervals (e.g., 120 degrees apart) around the stator to detect the position of the rotor's magnetic poles accurately. The number of sensors depends on the motor's pole pairs and the desired resolution of the rotor position detection.

3. **Commutation Sequence**: Based on the signals from the Hall Effect sensors, the controller determines the rotor position and commutates the motor windings accordingly. The controller switches the current flow through the motor windings in a specific sequence to generate a rotating magnetic field that drives the rotor.

4. **Advantages**: Sensored control offers precise rotor position detection, enabling smoother startup, better low-speed performance, and improved torque control for BLDC motors. It also allows for sensor-based fault detection and diagnostics, enhancing motor reliability and safety.

Sensored Control for PMSM (Permanent Magnet Synchronous) Motors:

1. **Resolver or Encoder**: PMSM motors often use more sophisticated sensors such as resolvers or encoders to provide accurate feedback on the rotor position. Resolvers and encoders offer higher resolution and accuracy compared to Hall Effect sensors, making them suitable for applications that require precise control and positioning.

2. **High-Resolution Feedback**: Resolvers and encoders provide continuous feedback signals indicating the rotor's angular position with high resolution. This information is used by the controller to accurately control the motor's phase currents and optimize its performance.

3. **Vector Control:** Sensored control combined with advanced control algorithms such as Field-Oriented Control (FOC) or Direct Torque Control (DTC) allows for precise torque and speed control of PMSM motors. These algorithms use the feedback from the sensors to accurately regulate the motor's electromagnetic field and torque output.

4. **Advantages:** Sensored control provides superior performance and efficiency for PMSM motors compared to sensorless control methods. It enables precise control of motor parameters such as speed, torque, and position, making PMSM motors suitable for a wide range of applications, including robotics, industrial automation, and electric vehicles.

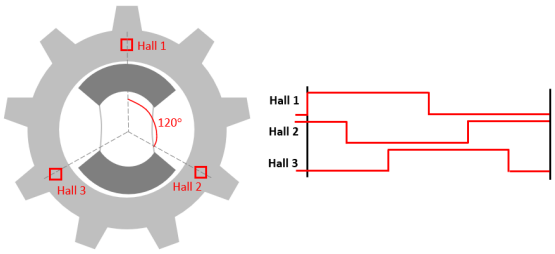

FIGURE 2.10: Enter Caption

2.1.5 Trapezoidal Control

Trapezoidal control, also known as six-step commutation, is a method used to control Brushless DC (BLDC) motors by applying voltage to the motor windings in a sequence that generates a trapezoidal back electromotive force (EMF) waveform. This method is widely used in BLDC motor control applications, especially in situations where precise speed and torque control are not critical, such as fan motors, pumps, and certain industrial applications. Here's how trapezoidal control of a BLDC motor works:

1. **Motor Phases**: BLDC motors have three phases (A, B, and C) and are equipped with three sets of windings distributed around the stator. The rotor contains permanent magnets, which generate a magnetic field that interacts with the stator windings.

2. **Commutation Sequence**: Trapezoidal control relies on a six-step commutation sequence to energize the motor windings. In each step, two of the three motor phases are energized, while the third phase is left floating (unenergized). The commutation sequence determines the direction of the magnetic field generated by the stator windings, which in turn determines the direction of rotation of the motor.

3. **Back EMF Sensing**: Trapezoidal control typically does not require position sensors to determine the rotor position. Instead, it relies on back EMF sensing to detect the rotor position indirectly. When a phase is left floating, the back EMF generated by the rotating rotor induces a voltage in the unenergized winding. By measuring the amplitude and polarity of this back EMF voltage, the controller can determine the position of the rotor relative to the stator windings.

4. **Voltage Commutation**: The controller generates PWM (Pulse Width Modulation) signals to control the switching of power transistors (or MOSFETs) connected to each phase of the motor. By varying the duty cycle of the PWM signals, the controller adjusts the voltage applied to the motor windings, controlling the speed and torque of the motor.

5. **Advantages and Limitations**: Trapezoidal control is relatively simple and cost-effective, making it suitable for many BLDC motor applications. It provides good efficiency and performance in applications where precise speed and torque control are not critical. However, trapezoidal control may

exhibit limitations in applications requiring high dynamic performance or smooth operation at low speeds, as it does not provide as precise control as more advanced methods like Field-Oriented Control (FOC).

Overall, trapezoidal control is a widely used method for controlling BLDC motors in various applications due to its simplicity, reliability, and cost-effectiveness. It provides sufficient performance for many applications while offering a straightforward implementation and operation.

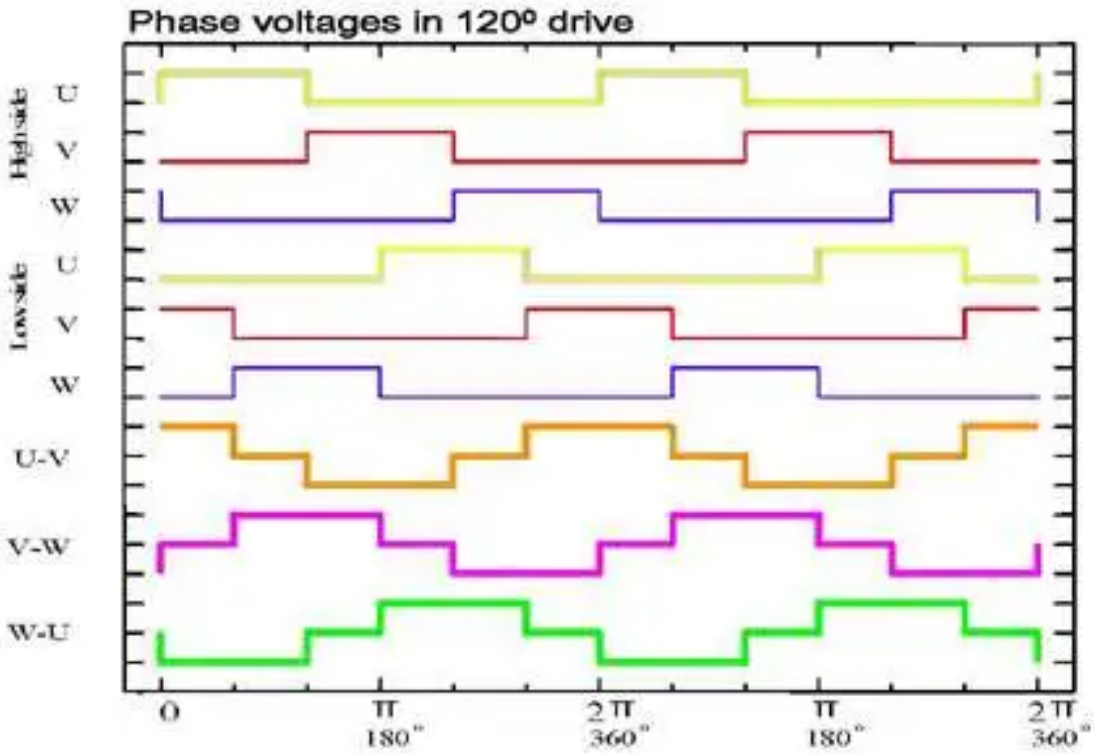

FIGURE 2.11: Trapezoidal Control

2.2 Road Sign Detection

2.2.1 YOLO

YOLO (You Only Look Once) is a state-of-the-art object detection algorithm that revolutionized real-time object detection tasks. It was introduced by Joseph Redmon, Santosh Divvala, Ross Girshick, and Ali Farhadi in 2016.

Here's a breakdown of how YOLO works:

1. **Single Neural Network**: Unlike traditional object detection algorithms that perform region proposal and classification separately, YOLO performs

both tasks in a single neural network. This end-to-end approach enables YOLO to achieve real-time object detection by directly predicting bounding boxes and class probabilities from input images.

2. **Grid-Based Prediction**: YOLO divides the input image into a grid of cells. Each cell is responsible for predicting bounding boxes and class probabilities for objects whose center falls within that cell. This grid-based approach allows YOLO to efficiently localize and classify multiple objects in a single pass through the neural network.

3. **Bounding Box Prediction**: For each grid cell, YOLO predicts multiple bounding boxes along with confidence scores that indicate the likelihood of containing an object and class probabilities for the objects. Each bounding box is represented by a set of coordinates (x, y) for the center of the box, width (w), and height (h). The confidence score reflects the accuracy of the bounding box prediction.

4. **Class Prediction**: In addition to bounding boxes, YOLO predicts class probabilities for each bounding box, indicating the likelihood of each detected object belonging to a specific class. YOLO uses softmax activation to output class probabilities for predefined classes.

5. **Training**: YOLO is trained on large datasets of labeled images using back-propagation and gradient descent to minimize the detection error. The loss function combines localization loss (measuring the accuracy of bounding box predictions) and classification loss (measuring the accuracy of class predictions).

6. **Non-Maximum Suppression (NMS)**: After predicting bounding boxes and class probabilities, YOLO applies non-maximum suppression to remove duplicate detections and retain only the most confident ones. This prevents multiple overlapping bounding boxes from being detected for the same object.

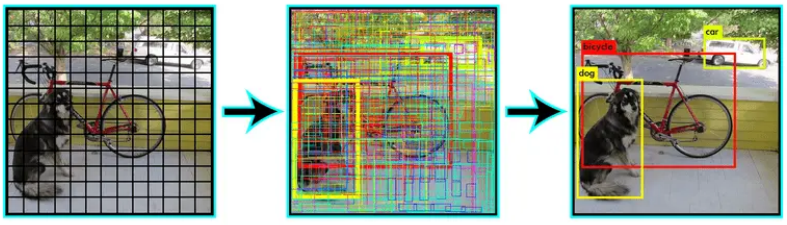

Figure 2.12: YOLO Workflow

subsectionR-CNN

Region-based Convolutional Neural Networks (R-CNN) is an object detection algorithm that marked a significant advancement in the field of computer vision. It was proposed by Ross Girshick, Jeff Donahue, Trevor Darrell, and Jitendra Malik in 2014. R-CNN and its variants are widely used for accurate and reliable object detection in images.

Here's how R-CNN works:

1. **Region Proposal**: R-CNN begins by generating region proposals to identify potential object locations in the input image. It uses selective search or a similar algorithm to generate a set of candidate regions, also known as region proposals, that are likely to contain objects.

2. **Feature Extraction**: For each region proposal, R-CNN extracts a fixed-size feature vector using a pre-trained convolutional neural network (CNN), such as AlexNet or VGG-16. The CNN is typically pre-trained on a large dataset, such as ImageNet, for image classification tasks. The features extracted from the CNN capture high-level representations of the objects within each region proposal.

3. **Object Classification**: The extracted features are then fed into a set of class-specific linear support vector machines (SVMs) to classify the objects contained within each region proposal into predefined classes (e.g., person, car, dog). Each SVM is trained to distinguish between a specific class and background.

4. **Bounding Box Regression**: In addition to object classification, R-CNN also performs bounding box regression to refine the coordinates of the region proposals. A separate regression model is trained to predict adjustments to the coordinates of the bounding boxes generated by the region proposal algorithm, improving the localization accuracy of the detected objects.

5. **Training**: R-CNN is trained in a multi-stage process. First, the CNN is pre-trained on a large dataset for image classification. Then, the SVMs and bounding box regression models are trained using the features extracted from the CNN and ground-truth annotations of object classes and bounding boxes.

6. **Evaluation**: After training, R-CNN is evaluated on a separate validation or test dataset to assess its performance in terms of object detection accuracy, precision, recall, and mean average precision (mAP).

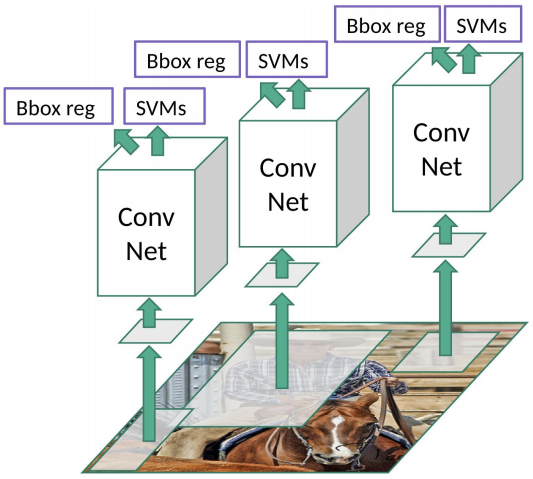

FIGURE 2.13: RCNN

2.2.2 Image Processing Techniques

Simple image processing techniques can be used for basic object detection tasks. While these methods are not as sophisticated as deep learning-based approaches like YOLO or R-CNN, they can still be effective for detecting objects in certain scenarios. Here are some common techniques:

1. **Thresholding**: Thresholding is a simple technique used to segment objects from the background in an image. It involves setting a threshold value and classifying pixels as foreground (object) or background based on whether their intensity values are above or below the threshold. This technique is useful for detecting objects with distinct intensity differences from the background, such as binary images with clear boundaries.

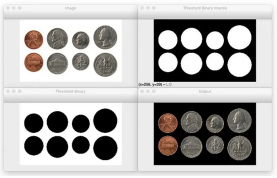

FIGURE 2.14: Color Threshold

2. **Edge Detection**: Edge detection algorithms, such as the Canny edge detector, identify edges or boundaries between objects in an image. By detecting

sudden changes in intensity, these algorithms highlight the edges of objects, making them easier to distinguish from the background. Edge detection is particularly useful for detecting objects with well-defined boundaries, such as geometric shapes or objects with high contrast edges.

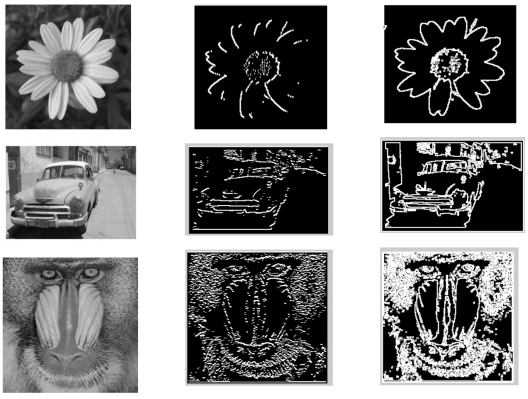

FIGURE 2.15: Edge Detection

3. **Blob Detection**: Blob detection algorithms identify regions of interest in an image based on their size, shape, and intensity. These algorithms analyze the connectivity and spatial distribution of pixels to identify clusters or blobs that correspond to objects in the image. Blob detection is commonly used for detecting objects with uniform intensity and well-defined shapes, such as circular objects or regions of interest in medical imaging.

4. **Template Matching**: Template matching involves comparing a template or reference image with subregions of the input image to find occurrences of the template within the image. By computing similarity measures, such as cross-correlation or normalized cross-correlation, template matching can identify regions in the input image that closely resemble the template. This technique is useful for detecting objects with known templates or patterns, such as logos, symbols, or landmarks.

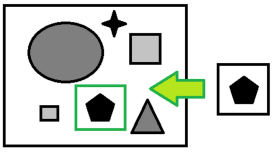

FIGURE 2.16: Enter Caption

5. **Corner Detection:** Corner detection algorithms identify key points or interest points in an image based on local variations in intensity or texture.

These algorithms detect corners, junctions, or keypoints where there is a significant change in the gradient or curvature of the image. Corner detection is useful for detecting distinctive features or landmarks in an image, which can be used for object recognition and localization.

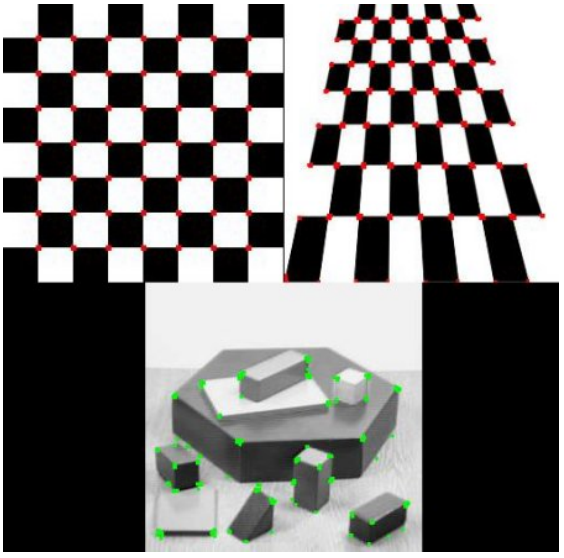

FIGURE 2.17: Corner Detection

2.2.3 SIFT

The Scale-Invariant Feature Transform (SIFT) algorithm is a powerful method for extracting distinctive features from images, which can be used for tasks like object recognition, image registration, and matching. SIFT was introduced by David Lowe in 1999 and has since become a widely used technique in computer vision.

Here's an overview of how the SIFT algorithm works:

1. **Scale-space Extrema Detection**: SIFT begins by identifying key points or interest points in the image that are invariant to scale and rotation. It does this by constructing a scale-space representation of the image using Gaussian blurring at multiple scales. At each scale level, the algorithm looks for local extrema in the difference-of-Gaussian (DoG) pyramid, which highlights regions with significant intensity changes across scales.

2. **Keypoint Localization**: Once the scale-space extrema are identified, SIFT performs keypoint localization to accurately determine the location and scale of each keypoint. It fits a 3D quadratic function to the nearby pixels in the scale-space pyramid to refine the keypoint coordinates and eliminate poorly localized keypoints, such as those on edges or low-contrast regions.

3. **Orientation Assignment**: After localizing keypoints, SIFT assigns an orientation to each keypoint based on the local image gradient directions. It computes gradient magnitude and orientation for the pixels in the keypoint's neighborhood and constructs a histogram of gradient orientations. The dominant orientation in the histogram is selected as the keypoint's orientation, making the descriptor rotationally invariant.

4. **Descriptor Generation**: Finally, SIFT generates a descriptor for each keypoint to represent its appearance and local image context. The descriptor is a vector containing gradient magnitude and orientation information for the pixels in a local neighborhood around the keypoint. This descriptor is robust to changes in illumination, viewpoint, and partial occlusion, making it highly distinctive and suitable for matching.

5. **Descriptor Matching**: Once descriptors are computed for keypoints in two images, SIFT performs descriptor matching to find corresponding keypoints between the images. It compares the descriptors using a distance metric such as Euclidean distance or cosine similarity and selects the best matches based on a threshold or nearest-neighbor criteria.

SIFT has several advantages, including robustness to changes in scale, rotation, and illumination, as well as its ability to handle partial occlusion and cluttered backgrounds. However, SIFT also has limitations, such as computational complexity, memory requirements, and sensitivity to parameter settings. Additionally, SIFT is patented, which may restrict its use in some applications. Despite these limitations, SIFT remains a widely used and effective method for feature extraction and matching in computer vision tasks.

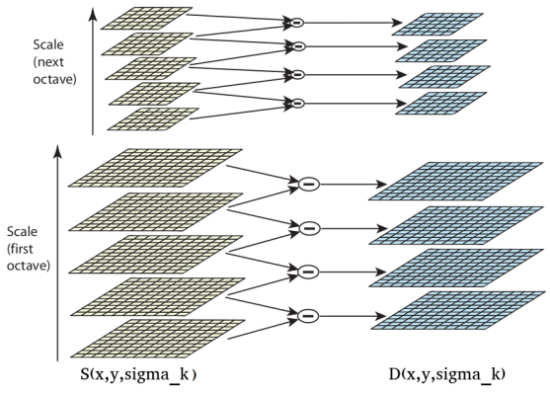

FIGURE 2.18: Interest Points

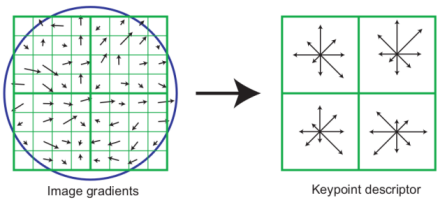

FIGURE 2.19: Enter Caption

2.2.4 ORB

ORB stands for Oriented FAST and Rotated BRIEF. Two Algorithms are combined together.

a) FAST

Select a pixel p in the image which is to be identified as an interest point or not. Let its intensity be Ip.

Select appropriate threshold value t.

- Consider a circle of 16 pixels around the pixel under test. (This is a Bresenham circle of radius 3.)
- Now the pixel p is a corner if there exists a set of n contiguous pixels in the circle (of 16 pixels) which are all brighter than Ip + t, or all darker than Ip - t. (The authors have used n= 12 in the first version of the algorithm)
- To make the algorithm fast, first compare the intensity of pixels 1, 5, 9 and 13 of the circle with Ip. As evident from the figure above, at least three of these four pixels should satisfy the threshold criterion so that the interest point will exist.
- If at least three of the four-pixel values — I1, I5, I9, I13 are not above or below Ip + t, then p is not an interest point (corner). In this case reject the pixel p as a possible interest point. Else if at least three of the pixels are above or below Ip + t, then check for all 16 pixels and check if 12 contiguous pixels fall in the criterion.
- Repeat the procedure for all the pixels in the image.

b) BRIEF

- **Feature Detection**: BRIEF starts with detecting key points or features in an image. These features are locations in the image that are distinctive and can be reliably matched between different images.

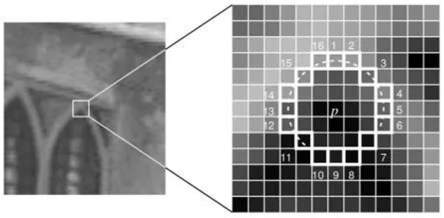

FIGURE 2.20: Fast Algorithm

- **Patch Description**: Once key points are detected, BRIEF defines small patches around each key point. These patches are regions of the image centered at the key points.

- **Binary Descriptor**: BRIEF then computes a binary descriptor for each patch. This descriptor is a binary string that encodes information about the intensity comparisons between pairs of pixels within the patch.

- **Intensity Comparison**: The binary descriptor is created by comparing the intensities of pixel pairs within the patch. For each pair of pixels, a simple intensity comparison is performed (e.g., greater than or less than). If the intensity of one pixel is greater than the intensity of the other, the corresponding bit in the binary descriptor is set to 1; otherwise, it's set to 0.

- **Descriptor Matching**: Finally, in the matching stage, BRIEF compares the binary descriptors of key points between different images to find correspondences. It uses techniques such as Hamming distance to measure the similarity between binary descriptors.

$$\text{Where } \tau(p;x,y) \text{ is defined as:}$$
$$\tau(p;x,y) = \begin{cases} 1 & : p(x) < p(y) \\ 0 & : p(x) \geq p(y) \end{cases}$$
$$p(x) \text{ is the intensity value at pixel } x.$$

FIGURE 2.21: BRIEF Algorithm

BRIEF is known for its computational efficiency due to its binary descriptor and simple intensity comparison operations. However, it may not be as robust to image transformations and changes in viewpoint compared to some other feature detection algorithms. Therefore, it's often used in conjunction with techniques like RANSAC (Random Sample Consensus) for robust matching in real-world applications.

2.3 Literature Survey

2.3.1 Cost Effective Electric Vehicle

[1] The paper discusses the implementation and study of a BLDC motor drive system, focusing on sensored speed control techniques using Pulse Width Modulation (PWM). It outlines the advantages and limitations of sensorless techniques and introduces sensored speed control techniques with detailed hardware design, implementation, and experimental results. The authors highlight the importance of Hall sensors in detecting rotor position and propose a method using a PIC microcontroller for BLDC motor control. Overall, the paper provides valuable insights into improving the performance and efficiency of BLDC motor drives through sensored control methods.

[13] it mentions the use of Microchip PICmicro Microcontroller in conjunction with the In-Circuit Debugger for code development. The document also explains the anatomy of a brushless DC motor, emphasizing the importance of commutation for rotor position sensing and torque optimization. Additionally, it discusses sensored commutation using Hall effect sensors and provides code segments for commutation control. Furthermore, it explains the electrical model of a DC motor and discusses the Back Electromotive Force (BEMF) and motor torque constants.

[2] The project described in the document focuses on designing a printed circuit board (PCB) for a sensorless three-phase brushless DC motor control system. The goal is to develop a compact and efficient controller that can drive a three-phase BLDC motor without the need for external sensors to detect rotor position. This sensorless approach simplifies the motor control system and reduces cost and complexity.

[3] The document is an article titled "Development of 5 kVA Inductive Heating System," authored by Nwosu E.U, Ewetumo T., Arogunjo A.M, and Adeyemi B., affiliated with the Federal University of Technology, Akure, Nigeria. It discusses the design and performance evaluation of a 5 kVA inductive heating system (IHS) for heating and melting materials below 900°C. The system includes components like a three-phase rectifier, microcontroller-based frequency generator, MOSFET driver (IR2110), and inductive-capacitor resonant tank. Testing results indicate successful heating of an iron rod to 856°C in 12 minutes and melting 1.5 kg of cast aluminum after 42 minutes. The article provides insights into the historical development of induction heating technology and the design specifics of the system's components, including the resonant tank, rectification, and driver circuitry.

[9]The document is a reference manual for designing a high-voltage BLDC drive system for domestic appliances using the MC68HC908MR8 microcontroller by Motorola. It introduces the application outline, emphasizing its use in low-cost compressor drives for various appliances. The benefits of variable-speed compressor drives over conventional solutions, particularly in terms of energy efficiency, are highlighted. The manual provides detailed figures and tables illustrating system concepts, motor control theory, hardware design, and software flowcharts. It is organized into sections covering system description, motor control, hardware design, software design, and a user guide. Overall, it serves as a comprehensive guide for engineers designing BLDC drive systems for appliances, focusing on efficient motor control and system integration.

[6] The excerpt delves into the development of a low-cost sensorless controller for brushless DC (BLDC) motors, underscoring the advantages of BLDC motors over conventional DC counterparts, such as higher efficiency and operational flexibility. It outlines the preference for sensorless control methods due to their cost-effectiveness and improved reliability compared to sensor-based systems. Within sensorless methods, the back-electromotive force (back-EMF) technique stands out, with variations in detection methods. Challenges like low-speed performance and noise interference are acknowledged, prompting the exploration of various strategies to mitigate these issues. The article's objective is to offer practical guidance in developing low-cost controllers, supported by theoretical insights into BLDC motor operation. Key to sensorless control is the zero-crossing point detection technique, necessitating careful consideration of noise reduction methods like filters and pulse-width modulation (PWM) configuration. Overall, the excerpt presents a comprehensive overview of the challenges and strategies involved in implementing a cost-effective sensorless controller for BLDC motors.

[7] In the Sensorless Field Oriented Control (FOC) implementation for Permanent Magnet Synchronous Motors (PMSM), accurate estimation of rotor speed and position is crucial. This involves the use of observers and filters within the control algorithm to predict the motor's behavior without relying on position sensors. Various techniques are employed for speed and position estimation, ensuring precise control and performance optimization. Rotor position estimation is especially vital for FOC, as it dictates the alignment of the stator's magnetic field with the rotor's, maximizing torque production. Through sophisticated algorithms, the system continuously adjusts and predicts the rotor's position, enabling seamless operation across a wide range of speeds and loads. This seminar section delves into these techniques, elucidating the methodologies and algorithms employed for

robust sensorless control of PMSM motors.

[8] Working with the subject of sensorless motor control requires an understanding of several topical areas; this report presents an understanding that was gained during this research work. The fundamentals of electric motors (particularly brushless motors) are developed from first principles and the basic models are discussed. The theory of sinusoidal synchronous motors is reviewed (phasor analysis of the single phase equivalent circuit). The concept of a complex space vector is introduced and developed using a working knowledge of the sinusoidal synchronous motor. This leads to the presentation of the space vector model of the permanent magnet synchronous motor, in both the stationary and rotor reference frames. An overview of the operation of three-phase voltage source inverters is given, followed by an explanation of space vector modulation and its relationship to regular sinusoidal pulse width modulation. Torque control of the permanent magnet synchronous machine is reviewed in several reference frames and then rotor-flux-field-oriented-control is explained. Finally, some schemes for sensorless operation are discussed.

[4] This application note presents a solution to control a permanent magnet synchronous motor (PMSM) using the TMS320F2803x microcontrollers along with the DRV830x-HC-EVMs. The two EVMs that are targeted are the DRV8301-HC-EVM and the DRV8302-HC-EVM which showcase the DRV8301 and DRV8302 Three Phase Pre-Drivers with Dual Current Shunt amplifiers and Buck Converter. TMS320F2803x devices are part of the family of C2000 microcontrollers which enable cost-effective design of intelligent controllers for three phase motors by reducing the system components and increasing efficiency. With these devices it is possible to realize far more precise digital vector control algorithms like Field Orientated Control (FOC). This algorithm's implementation is discussed in this document. The FOC algorithm maintains efficiency in a wide range of speeds and takes into consideration torque changes with transient phases by processing a dynamic model of the motor. Among the solutions proposed are ways to eliminate the phase current sensors and use an observer for speed sensorless control. The DMC Library uses TI's IQ math library, which supports both fixed and floating point maths. This makes migrating from floating to fixed point devices easy

[5]The TIDA-00472 is a discrete IGBT-based three-phase inverter for driving brushless DC (BLDC) motors rated up to 250 W, for example, used in cooker hoods, using a sensor-less, trapezoidal control method. The design provides software implementation for DC bus voltage ripple compensation resulting in 30% reduction in the DC bus capacitor requirement and reduced overall BOM cost. The cycle-by-cycle overcurrent protection feature protects the power stage from

large current spikes and the board can work up to 65°C ambient. This design has also been tested to pass EN55014 standards for conducted emissions, Surge and EFT.

[10] The STEVAL-TTM001V1 evaluation kit is designed to demonstrate the highly efficient ST automotive-grade 100 V STripFET F7 series Power MOSFETs and BLDC motor driver IC operating in typical automotive low voltage (car battery up to 48 V), high current motor control applications. The kit includes a board to sense and condition currents, and a driver board with a programmable L9907 FET driver with full diagnostics to manage all 36 STH315N10F7 Power MOSFETs on a power board also included in the kit. The driver board also includes an ST motor control connector to interface with any compatible ST motor control board (not included in the kit), and various other connectors and jumpers for monitoring and protection, motor position feedback information, and auxiliary power

2.3.2 Road Sign Detection

[11] The Scale-Invariant Feature Transform (SIFT) algorithm, introduced by D.Lowe in 2004, revolutionized feature detection by providing robustness to scaling, rotation, and illumination changes. It extracts keypoints and computes descriptors in four main steps. First, it detects scale-space extrema using Difference of Gaussians to identify potential keypoints across different scales. Then, keypoints are localized and refined to ensure accuracy, with low-contrast and edge keypoints eliminated. Next, orientations are assigned to keypoints to achieve rotation invariance, contributing to matching stability. Finally, descriptors are generated by dividing the keypoint neighborhood into sub-blocks and computing orientation histograms, resulting in a robust representation. Keypoint matching between images is achieved by identifying nearest neighbors, with a ratio test to discard false matches. SIFT's comprehensive approach makes it a cornerstone in computer vision applications for object recognition, image stitching, and more.

[12] ORB (Oriented FAST and Rotated BRIEF) is a feature detection and description algorithm developed by Ethan Rublee, Vincent Rabaud, Kurt Konolige, and Gary R. Bradski in 2011. It serves as an efficient alternative to patented algorithms like SIFT and SURF, offering comparable performance without the need for licensing fees. ORB combines the FAST keypoint detector with the BRIEF descriptor, incorporating modifications to enhance its effectiveness. It addresses rotation invariance by computing the orientation of keypoints using intensity-weighted centroids and steering the BRIEF descriptors accordingly. By discretizing angles and

performing a greedy search for uncorrelated binary tests, ORB optimizes descriptor generation. With features like multi-probe LSH for matching and customizable parameters for keypoint retention and descriptor computation, ORB is well-suited for various computer vision tasks, including low-power device applications like panorama stitching.

[14]Local feature point detection and description are the basis for Computer Vision. SIFT is one of the most efficient local image descriptors and have been well studied in recent years. In this paper, we introduce B-SIFT, a novel binary local image descriptor which is based with SIFT. The method is compared with SIFT, and is shown that B-SIFT is better both in accuracy and efficiency.

Chapter 3

Implementation

3.1 Cost-Effective Electric Vehicle

The whole electric design of the electric vehicle can be divided into following parts:

1. Motor
2. Motor Controller
   (a) 3-Phase Bridge
   (b) Gate Driving Circuit
   (c) Micro-controller
3. Feedback Unit
4. Charging System
   (a) Charger
   (b) Solar Panels

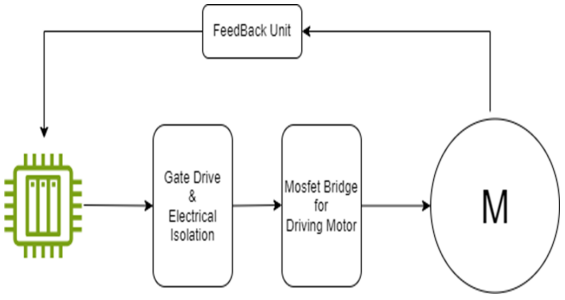

FIGURE 3.1: Electrical System

3.1.1 Motor

Motor being used in this project is a 6 Phase Synchronous Motor with two pair of coils. Each pair has 3 coils connected in Y-Configuration which means that they have a phase shift of 120 degrees. The other pair of coils is the same but has a phase shift of 40 degrees with the other pair. This configuration is helpful in increasing the torque of the motor. The phase shift will induce extra pull and push on the rotor due to this amount of phase shift.

- **120 Degrees Phase Shift:** The coils in the 3-Phase coils are at a phase shift of 120 degrees. This phase shift is seen clearly in the figure given below:

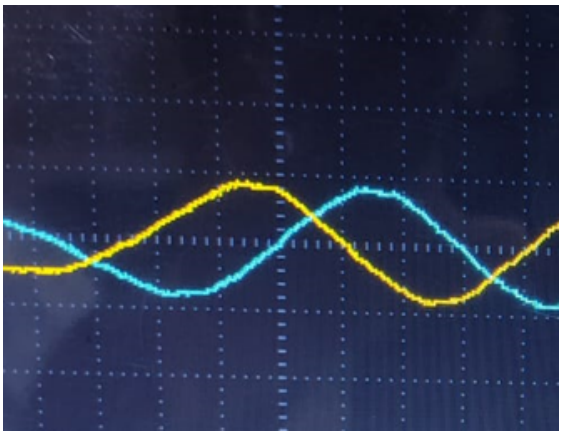

FIGURE 3.2: 120 Degree Phase Shift

- **40 Degrees Phase Shift:** The phase shift between the two 3-phase coils is almost 40 degrees. It is beneficial to increase the torque of the motor. It can be seen in the following figure:

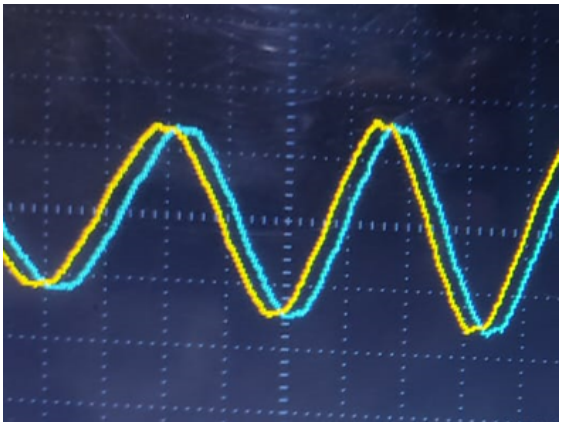

FIGURE 3.3: 40 Degrees Phase Shift

-

- **Y-Configuration Coils:** The "Y" configuration of motor coils refers to a specific arrangement of coils in a three-phase electric motor. In this configuration, the motor's coils are arranged in a manner resembling the letter "Y". Each coil represents one phase of the motor's operation. In a Y-configured motor, one end of each coil is connected to a common point, typically called the neutral point, while the other ends are connected to the respective phases of the power supply. This configuration offers several advantages, including simplicity of wiring and balanced operation. The common neutral point allows for effective distribution of current among the three phases, ensuring balanced load and reducing the risk of phase imbalances.

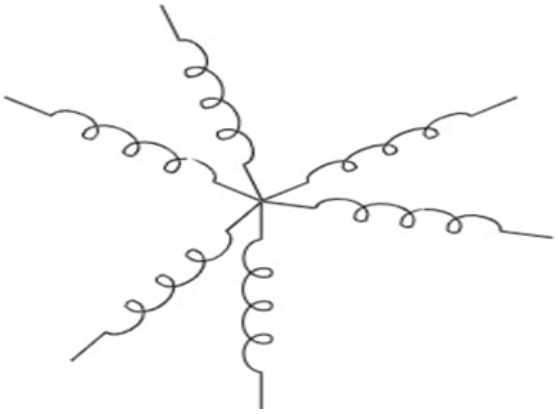

FIGURE 3.4: Y-Configuration of Coils

- **Pole Pairs:**Motor has 16 Poles and 8 Pole Pairs meaning that the motor becomes an 8 pole paired magnet when it is energized using the 3-Phase sine waves of voltages. The number of pole pairs and poles of the rotor and stator of a synchronous motor is the same. Following Diagram shows the configuration of the pole pairs:

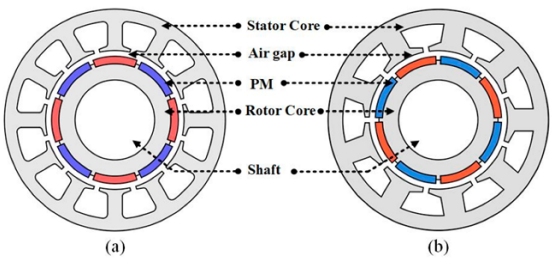

FIGURE 3.5: Pole Pairs of Motor

- **Current Rating:**The motor is rated at 100A. 50A for each set of coils.

3.1.2 Motor Controller

3.1.2.1 Circuit Design

- **3-Phase Bridge**

1. **Explanation:**A three-phase bridge inverter is a type of power electronic device used to convert DC (direct current) power into AC (alternating current) power, typically for applications such as motor drives, renewable energy systems, and grid-tied inverters. The term "bridge" refers to the arrangement of semiconductor switches in a bridge configuration to control the flow of current.

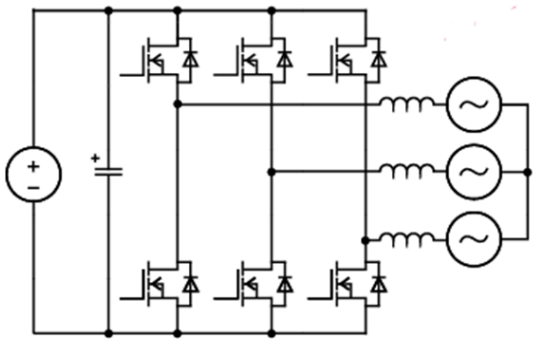

FIGURE 3.6: 3-Phase Bridge

A three-phase bridge inverter operates by utilizing six semiconductor switches arranged in a bridge configuration across three phases (A, B, and C) to convert DC power into AC power. Through pulse width modulation (PWM) control, the switches are rapidly switched on and off in a specific sequence, generating three overlapping output voltages with a phase difference of 120 degrees. This sequence creates a three-phase AC output waveform with precise regulation of voltage magnitude and frequency. Output filtering is employed to remove harmonics, resulting from PWM, to produce a clean sinusoidal waveform. Widely used in industrial motor drives and grid-tied renewable energy systems, three-phase bridge inverters provide efficient and controllable conversion of DC power into high-quality three-phase AC power for a variety of applications.

2. **Mosfet Selection:** Mosfet acts as an electronic switch in the 3-phase bridge. A Metal-Oxide-Semiconductor Field-Effect Transistor (MOSFET) is a type of semiconductor device used for amplifying or switching

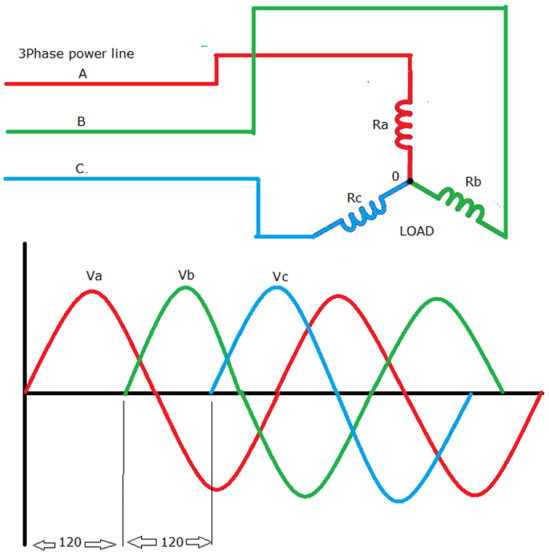

FIGURE 3.7: 3-Phase Output Waves

electronic signals. In its simplest form, a MOSFET consists of a channel between the source and drain terminals, controlled by the voltage applied to the gate terminal. When a voltage is applied to the gate, it creates an electric field that either allows or blocks the flow of current through the channel, depending on the MOSFET's type (N-channel or P-channel). In an N-channel MOSFET, a positive voltage applied to the gate allows current to flow from the source to the drain, while in a P-channel MOSFET, a negative voltage is required. MOSFETs operate in either an "on" state (conducting) or an "off" state (non-conducting), making them ideal for applications such as amplifiers, switches, and voltage regulators due to their high switching speeds, low power consumption, and minimal heat generation.

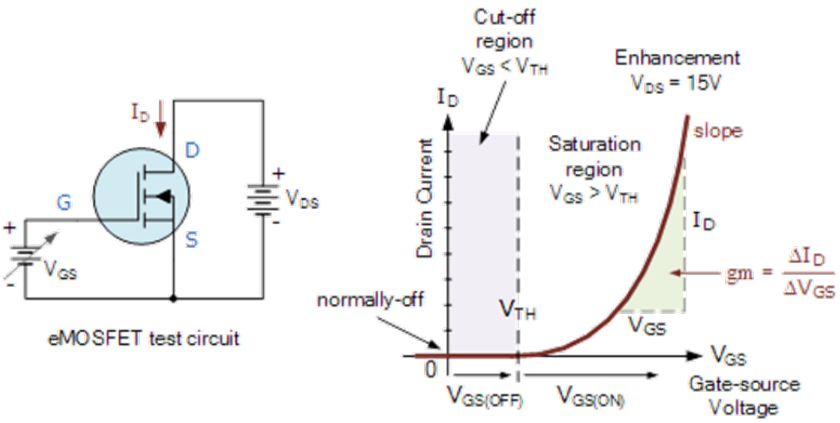

FIGURE 3.8: Working of a Mosfet

Vds (Breakdown Voltages)

Voltage Range of a mosfet is called the Vds (Breakdown). It is the maximum voltages which can be applied across the dran and source of a mosfet before it breakdowns. Due to high spikes generated by the backemf of the motor, we should consider using a mosfet which has Vds = 3*(Input Voltages). As the input voltages of the motor controller 24V, the safe limit of the mosfet should be around 100V.
Drain Current: Id is called the drain current. It is the maximum amount of current that can flow through the drain before the mosfet burns. Due to high current spikes generated by the inductor coils, the selected value of Id = 4*(Input Current). Due to heat loss in the mosfet, it can burn when a lot of current flows through it. It has to be cooled down very effectively in order to justify the maximum current range which is almost impossible. That is why we always draw $1/4^{th}$ current of the maximum limit from the mosfet in order to use is effectively.
Rds (ON): Rds (ON) is the resistance between the drain and source of the mosfet when the mosfet is fully turned on. It determines the heat loss during the current condution according to the $\mathbf{I^2R}$.Lower Rds(on) should be preferred for less heat loss.

Parallel Mosfets: In order to drain large amount of currents, a single mosfet is not suitable because of heat dissipation**.** For this purpose, mosfets are used in parallel. The total amount of current then divides among the parallel paths and then high amount of currents can be controlled using multiple mosfets in parallel. Following diagram shows the parallel mosfets in action: Mosfet selelcted in the first phase of protyping the inverter was 75n75. Which has following parameters: Due to less current carrying capability, we had to use another mosfet called IRF4110.

Features of **IRF4110** are given below:

Heat Dissipation in IRF4110: Number of parallel mosfets being used at the moment are 3. Which means that the maximum current limit of 100A is actullay divided among the 3 mosfets. But, this is only for one stage. The other stage which is being operated at a 40 degrees phase shift is also drawing current in parallel. So, it means that the current is actually divided into 6 mosfets. 3 for one set of coil and 3 for the other set of coil. A total of 16.6A must be flowing through each mosfet.

$$Rds(on) = 4.5m\Omega$$

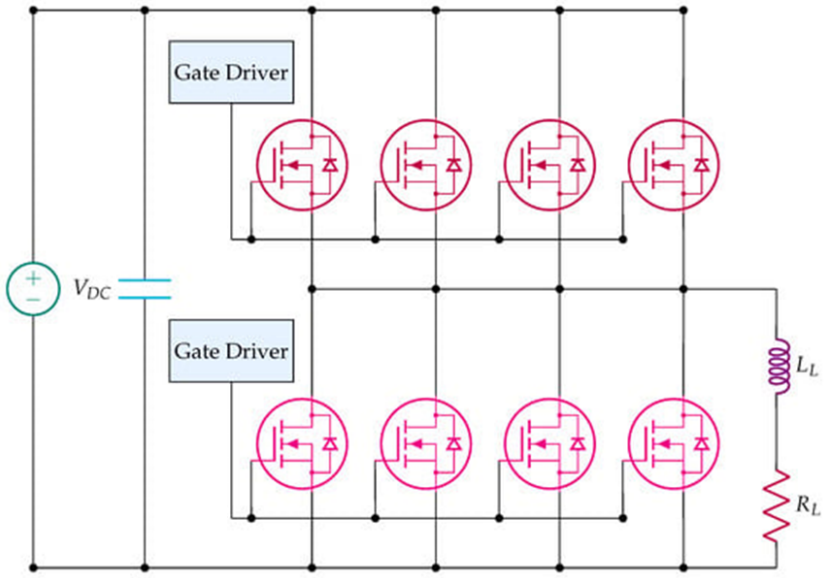

FIGURE 3.9: Parallel Mosfets

■ **FEATURES**

* $R_{DS(ON)}$ = 12.5mΩ @V_{GS} = 10 V
* Ultra low gate charge (typical 90 nC)
* Fast switching capability
* Avalanche energy Specified
* Improved dv/dt capability, high ruggedness

FIGURE 3.10: 75n75 Mosfet

V_{DSS}		100V
$R_{DS(on)}$	typ.	3.7mΩ
	max.	4.5mΩ
I_D (Silicon Limited)		180A ①
I_D (Package Limited)		120A

FIGURE 3.11: IRF4110 Mosfet

$$P = I^2 R$$

$$P = (16.6)^2 * 4.5m = 12.25W$$

Hence, the amount of heat being dissipated is 12.25 W from one mosfet. The total amount of heat being dissipated is 3 times this amount. To successfully dissipate this amount of heat using a heat sink, the area of the heat sink must be **4.4in^2.**

3. **Gate Resistance:** The purpose of gate resistance in a MOSFET is

primarily to control the rate at which the gate voltage changes during switching transitions. MOSFETs are highly sensitive to the rate of change of the gate voltage dv/dt. Excessive dv/dt can lead to parasitic oscillations, ringing, or other undesirable effects, especially in high-frequency switching applications. Gate resistance helps dampen these effects by limiting the rate of rise and fall of the gate voltage, effectively smoothing out the transitions. Additionally, gate resistance can also help reduce the possibility of gate ringing caused by parasitic inductances in the circuit.

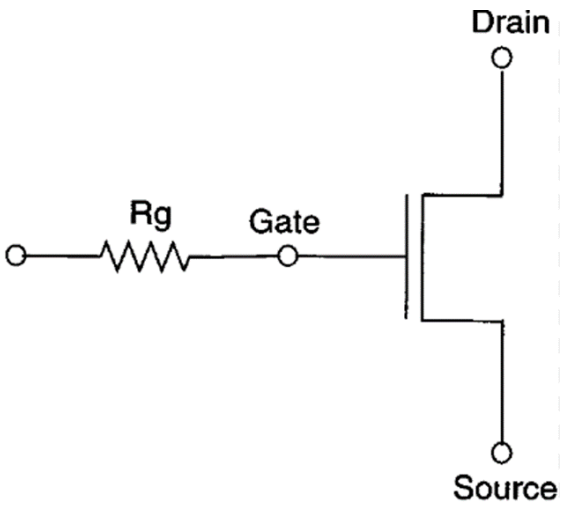

FIGURE 3.12: Gate Resistance with a Mosfet

The gate resistance in a MOSFET circuit impacts both its turn-on and turn-off processes. During turn-on, a higher gate resistance slows the rise of the gate voltage resulting in a longer turn-on time and reducing the risk of overshoot and ringing. This ensures a smoother transition, enhancing circuit stability. Conversely, during turn-off, a higher gate resistance slows the fall of the gate voltage, prolonging the turn-off time and mitigating the effects of parasitic capacitances and inductances, thus reducing voltage spikes and ringing. In both cases, the gate resistance provides controlled transitions, optimizing MOSFET switching performance and improving circuit reliability. Adjusting the gate resistance allows designers to tailor MOSFET behavior to specific application requirements, balancing speed and stability effectively.

A higher gate resistance has an effect on the the current spikes as well. A higher gate resistance means higher time to turn on the mosfet which will eventually lead to low dI/dt. So, in the case of high current applications, a high value of this resistance must be used. The value of gate

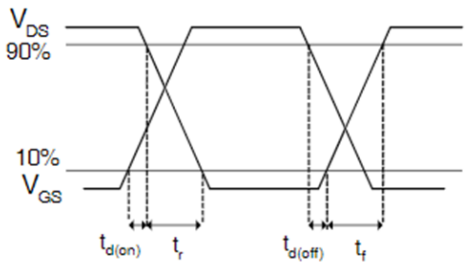

FIGURE 3.13: Turning On and Off of a Mosfet

resistance that we have chosen for each mosfet is 150Ω. Qg, Vgs, and Rg represents total gate charge, input voltage at gate and gate resistance.

$$Qg = 210nC$$

$$Vgs = 12V$$

$$Rg = 150\Omega$$

$$t = Q/I$$

$$I = Vgs/Rg = 80mA$$

$$T(on) = T(off) = 210n/80m = 2.6ms$$

4. **Complete Circuit**

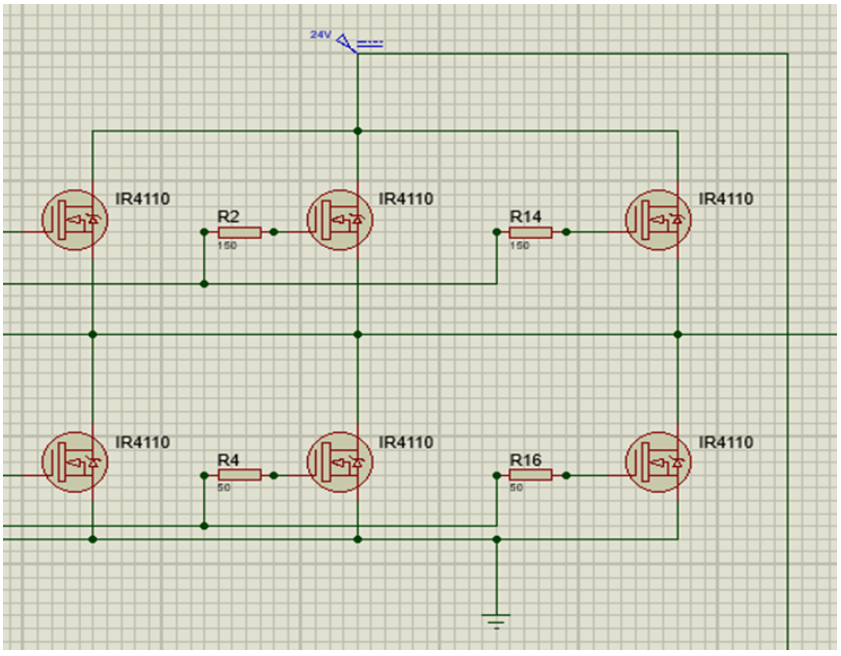

FIGURE 3.14: $3_{PhaseBridgeInverter}$

- **Gate Driver Circuit:**

  A gate driver circuit is essential for effectively driving a MOSFET because it ensures precise control of the MOSFET's gate voltage, optimizing its performance and reliability. MOSFETs have a high input impedance, which makes them sensitive to voltage fluctuations and susceptible to gate capacitance effects. A gate driver circuit overcomes these challenges by providing the necessary voltage and current levels to rapidly charge and discharge the MOSFET's gate capacitance during switching transitions. By delivering sufficient drive strength, the gate driver ensures fast switching speeds, reducing switching losses and improving efficiency. Moreover, it protects the MOSFET from voltage spikes and ringing by controlling the rise and fall times of the gate voltage. Additionally, gate drivers can incorporate features like shoot-through protection, under-voltage lockout, and temperature monitoring, enhancing MOSFET reliability and ensuring safe operation in various applications, including motor drives, power supplies, and inverters.

  1. **Bootstrap Circuit:** A bootstrap circuit in a gate driver is utilized to enhance the efficiency and performance of driving MOSFETs or IGBTs by ensuring a sufficient gate drive voltage even in high-side applications where the gate voltage must exceed the supply voltage. The bootstrap circuit utilizes a capacitor to temporarily store charge from the supply voltage during the low side's on-time, and then transfers this charge to the high side's gate, effectively boosting the gate voltage above the supply voltage. This allows for efficient and reliable switching of high-side MOSFETs or IGBTs without the need for a separate isolated power supply. By generating a voltage higher than the supply voltage, the bootstrap circuit enables fast switching and minimizes power losses, making it particularly useful in applications such as motor drives, power converters, and inverters, where high-side switching is necessary.

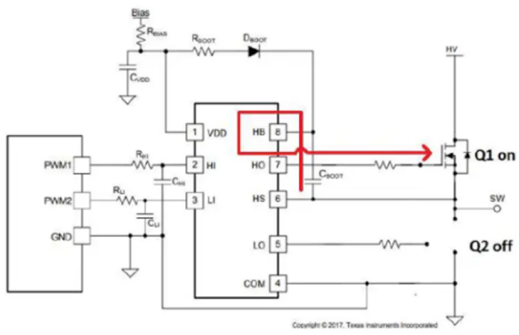

FIGURE 3.15: Bootstrap Circuit

2. **IR2110:**

Product Summary

V_{OFFSET}	(IR2110)	500V max.
	(IR2113)	600V max.
I_O+/-		2A / 2A
V_{OUT}		10 - 20V
$t_{on/off}$ (typ.)		120 & 94 ns
Delay Matching	(IR2110)	10 ns max.
	(IR2113)	20ns max.

FIGURE 3.16: IR2110 Features

Functional Block Diagram

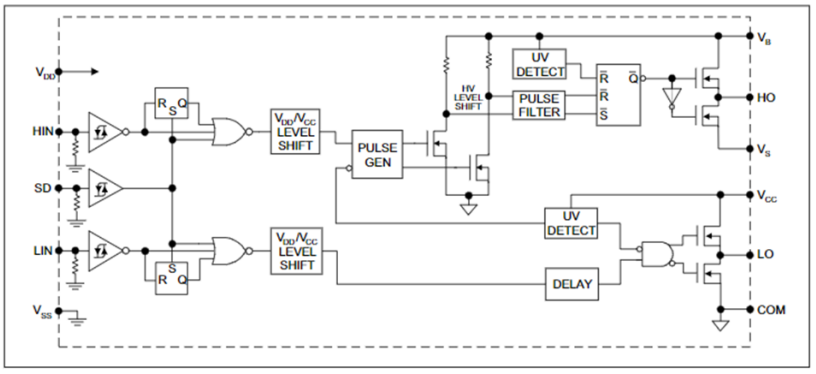

FIGURE 3.17: IR2110 Functional Block Diagram

3. **Protection Circuit:** High backemf voltages can cause the voltage on the Vs pin of the gate driver to drop below the ground. In order to maintain the voltage level at the safe limit, we need to add some extra resistances at the driver side of the circuit as well which will not allow the voltages on the Vs pin of IR2110 to drop below the ground or COM. This will enable us to drive the circuit at high current at high voltages. not doing so, will burn the mosfets after some tries. Following diagram shows the unusual behavior of the circuit:

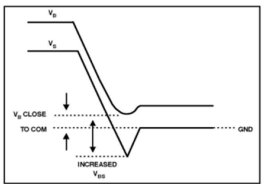

FIGURE 3.18: Voltage Drop Across Pin Vs

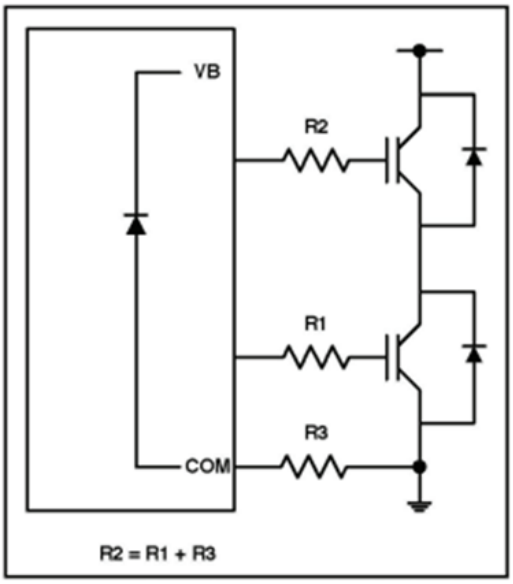

FIGURE 3.19: Protection Circuit for IR2110

4. **Full Circuit:**

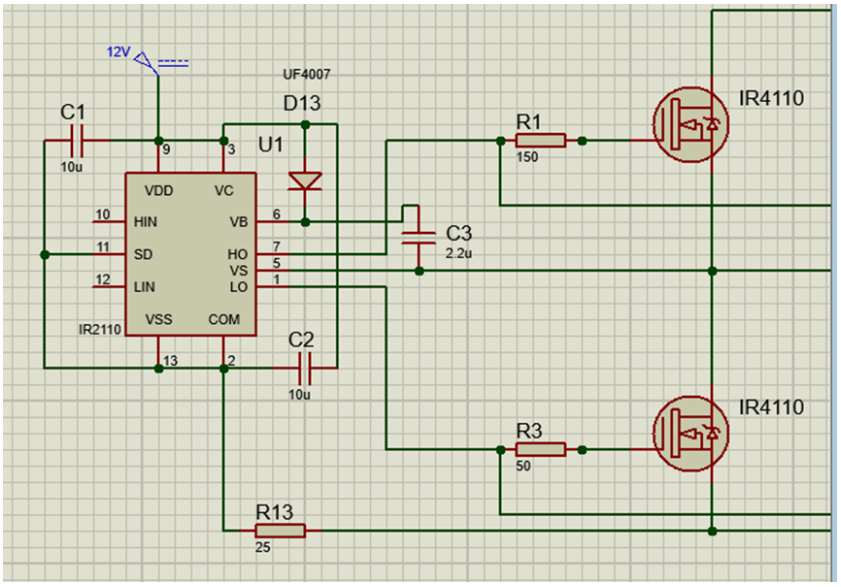

FIGURE 3.20: Gate Driver Circuit

- **Micro-controller:** The choice of the microcontroller is based on following parameter: 1. Cost 2. No. of PWM Channels 3. Availability in Pakistan Keeping the above parameters in mind, **ESP32** is the only microcontroller providing all of the above features. Following is the complete pinout of esp32 showcasing its features as well.

  Esp32 has 28 pins which can be configured as a PWM output. The requirement in our case is 12 pwm channels. 6 for high side and 6 for low side

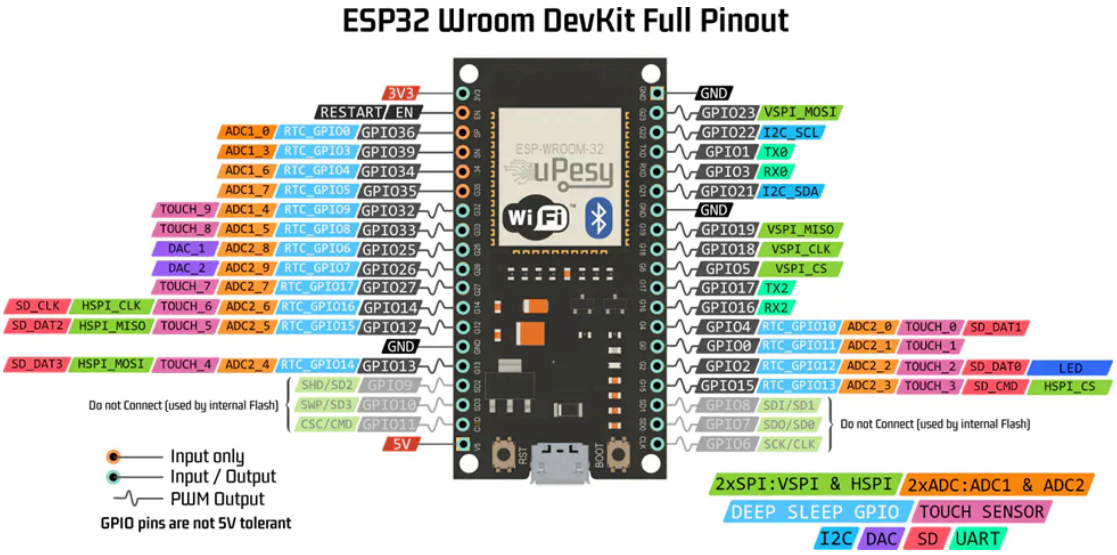

FIGURE 3.21: ESP32 Pinout

mosfets. No other microcontroller provides these much pwm channels in a single package and at a cost tha esp32 is.

- **Feedback Unit** The feedback unit is used in the sensored control of the motor which include

  1. Temperature measurement
  2. Current Sensing
  3. RPM Sensor

  1. **Temperature** For measuring the temparute of the mosfets, we are using LM35 which is temperature sensor that provides an analog output based on the temperature. ADC of the esp32 is used for this purpose. Following are the characteristics of the output of LM35 10mV will in-

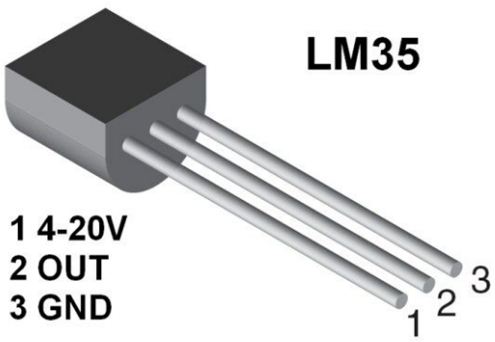

FIGURE 3.22: LM35 Pinout

crease on the output if 1°C temperature is increased.

- Analog Output
  - 0.5°C Accuracy at 25°C
  - Easily read by Arduino
  - Highly Linear Transfer Function
  - 10 ($^{mV}/_{°C}$) Slope

FIGURE 3.23: LM35 Features

2. **Current Sensor:** ACS758 current sensor is used to measure the current going into the coils. Its maximum limit is 50A. Only one sensor is required assuming that the current will be divided among both stages equally. The controller will not operate over or near 100A. The sen-

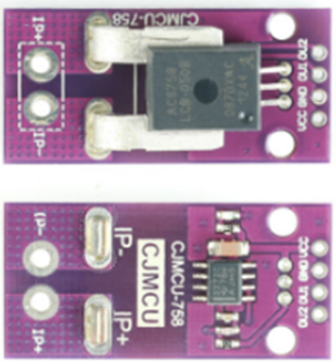

FIGURE 3.24: ACS 758

sitivity for this sensor is 60mV/A. Which means that output voltages will increase by 60mV if 1A increase is detected.

3. **RPM Sensor:** In order to measure the rpm, the configuration of the rotor of the magnet is used. Since there are 8 pole pairs in the rotor, alternating pole can be colored white. An IR sensor will then be used to detect the occurences of white regions in a second and then it will be converted into rotation per minute of the rotor according the formula used in the firmware. IR sensor simply outputs a high signal as soon as it detects something white and a low signal when it detects something not white.

3.1.2.2 Firmware

- **3-Phase Sine Wave Generation** Generating a three-phase sine wave in firmware using PWM signals involves precise timing control to synthesize the

FIGURE 3.25: Enter Caption

desired sinusoidal output. The process typically utilizes a technique known as space vector modulation (SVM) or similar algorithms. In this method, the PWM signals for each phase are modulated based on the desired amplitude and phase angle of the sine wave at a given instant. By dynamically adjusting the duty cycles of the PWM signals in accordance with the sine wave reference, the microcontroller or DSP effectively controls the output voltage of each phase. This requires accurate calculation of the PWM duty cycles and phase shifts to maintain the desired waveform shape and frequency. By iteratively updating the PWM outputs with appropriate timing, the firmware generates a smooth three-phase sine wave suitable for driving motors, inverters, and other AC applications.

Since the sine wave is controlled by changing the duty cycle of the pwm signal, we only need pwm for generating this sine wave. When these pwm signals are fed to capacitive or an inductive load, they come out to be exactly sine waves of voltages and currents.

Since motors are inductive load, this method is suitable to feed sine waves of voltages across the coils and also a method used in the industry for commercial applications.

Following diagram showcases the generation of sine waves using pwm signals:

1. **Phase Shift:** We are using a method of array shifting or rolling in order to add phase shift in the firmware. If we divide 360 degress into 36 parts, and make an array of sin(), it will contain the value if sine from angle 0 to 360. Whenever we want to output some duty cycle, we will iterate through this array of sines and multiply the maximum amount of duty cycle with the value of sine. In this way a sine wave mimicking pwm signal can be generated. And in order to introduce phase shift, we can roll the array or shift the array by that specific amount. For example if we want to introduce a phase shift of 120 degrees, we will

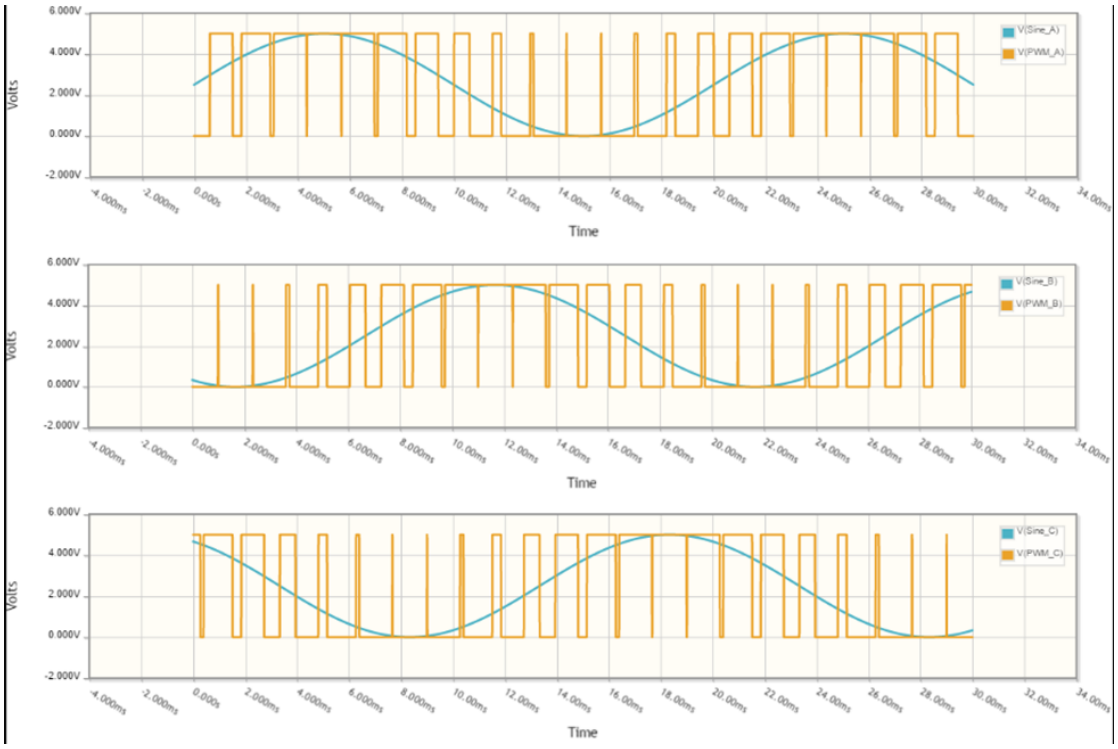

FIGURE 3.26: Sine Wave with PWM

roll the array by 12 elements. And if we want to add a phase shift of 40 degrees, we will roll the original array by 4 elements. In this way phase shift can be easily added to the firmware.

2. **PWM Characteristics:** ESP32 provides various features for generating the pwm signal. Following are the charactaristics of the pwm being used:

   1. Frequency = 20khz 2. Resolution = 10bit (0-1024)

3. **Input RPM:** In order to provide exact rpm to the motor, we need to have the right number of pole pairs of the motor. The input and output rpm of a synchronous motor are represented by the following formula: The synchronous motor in our use has 8 pole pairs meaning that it has

$$Ns = \frac{120f}{P}$$

Where,
Ns = Syncronous speed (RPM)
f = Frequency (c/s or Hz)
P = Number of poles

FIGURE 3.27: Input RPM Formula

16 poles. The above formula is reduced to

$$Ns = 120f/16 = 7.5f$$

This above formula will be used in the firmware to calculate the actual speed and from the input rpm. So we need to find f because user will input Ns which will the synchronous speed of the motor.

$$f = 0.13Ns$$

4. **Feedback RPM:** Feedback rpm are calculated using an ir sensor. The number of white regions it detects In a second will determine the actual rpm of the motor. We can maintain a counter and that couner will decide the final value. The rotor is divided into 4 white and 4 black regions. It means that when a complete roation is done, the counter will have a value of 4. Thus a simple equation in the firmware will decide the actual rpm. This counter is incremented whenever a white region is encountered (output of the ir sensor is high).

$$rpm = count * 60/4$$

5. **Temperature:** Temperature is measured using the adc of the esp32 which is of 10 bit resolution which means that the microcontroller can read 0-3.3V in the form of 0-1023 which will be 10 bit numbered. A simple equation according to the sensitivity of the sensor can be maintained which is:

$$temp = analogueInput * 330/1023$$

6. **Current:** Current is measured using the ACS758 sensor which has a sensitivity of 40mV/A. According to this logic we can maintain an equation that will calculate the current flowing:

$$current = analogInput * 330/(1023 * 4)$$

7. **VF Curve:** A synchronous motor works on the principle of v/f curve. It states that the amount of voltages provided to the motor must be directly proportional to the rpm. Reason for this is the high amount of backemf generated at high speed. So, in order to provide the desired amount of current to the motor, the voltages should be able to overcome the generated back emf. This principle is the fundamental principle to

drive the motor. We have used a linear relation showing the v/f curve working by the following equation:

50 rpm -¿ 50% Duty Cycle (12V)

5000 rpm -¿ 100% Duty Cycle (24V)

$$volts = (rpm + 6000)/500$$

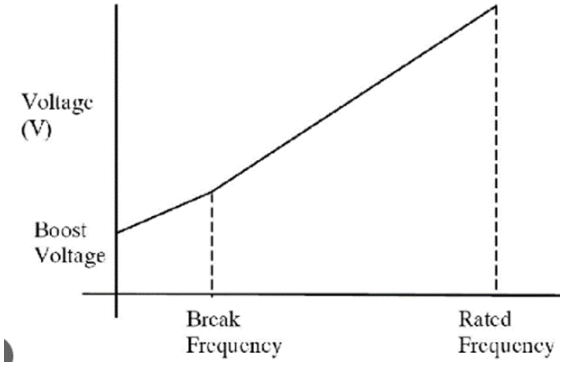

FIGURE 3.28: vf Curve

8. **PI Control:** PI (Proportional integral) control has also been developed on the V/F control. It will allow the rpm to remain exactly as input by the user. RPM will be the controlled variable and error will be calculated. Thus, base voltages will be provided by the v/f curve and any additional voltages required to maintain rpm will be provided by the PI control of the system. Proportional Constant = 0.001 Integral Constant = 0.001

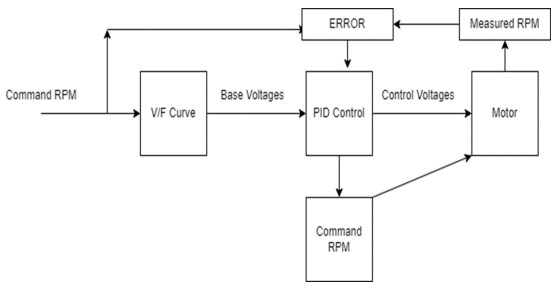

FIGURE 3.29: PID Control of motor

9. **Flowchart:**

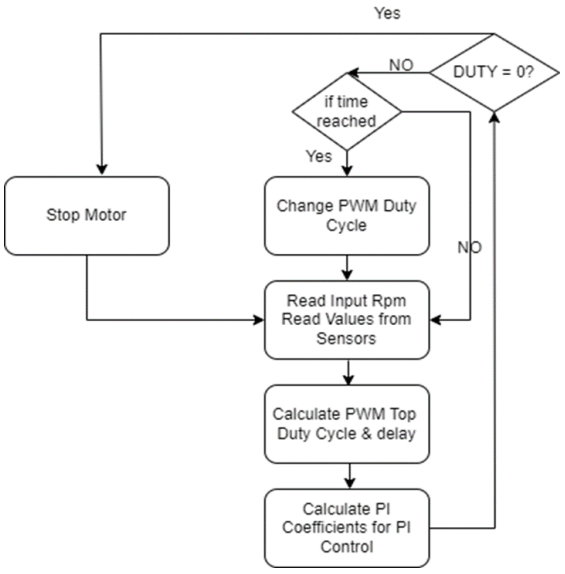

FIGURE 3.30: Firmware Flowchart

3.1.2.3 Use Cases

A user can:

- Input
  - RPM
- Adjust
  - MAX RPM
  - MAX TEMP
  - MAX CURRENT
  - MAX VOLTS
- See
  - TEMP
  - RPM
  - VOLTS
  - CURRENT

3.1.3 Chassis

1. 400 kg gross weight chassis for carrying goods
2. 10Nm Torque to move it.

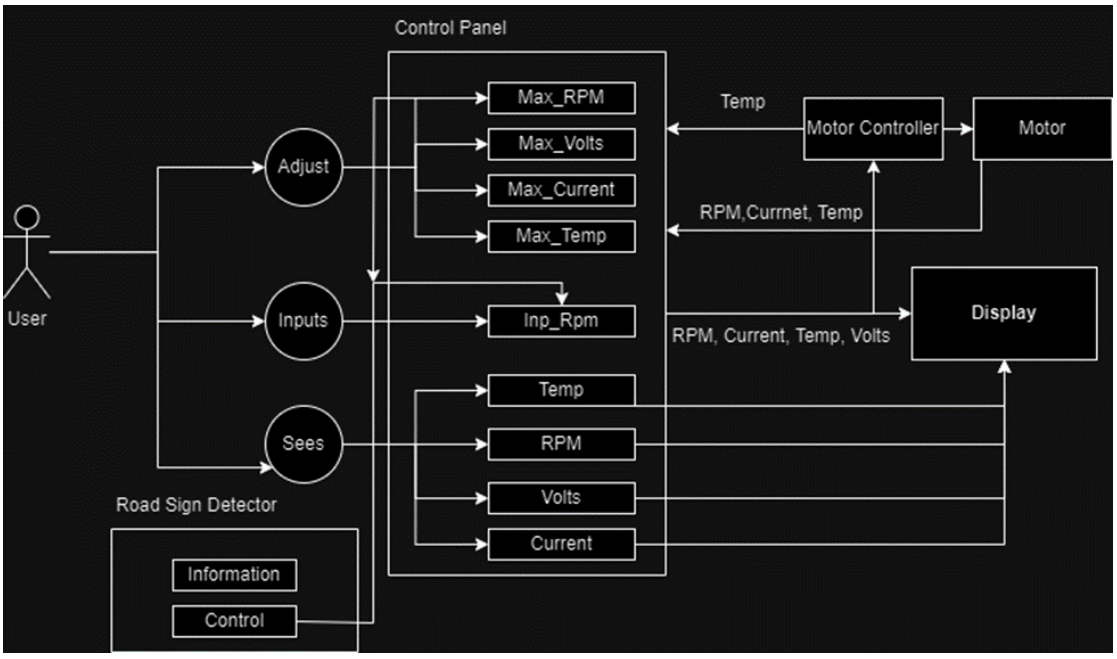

FIGURE 3.31: Usecase Diagram

3.1.4 Charging System

- **Batteries**: In the current prototype of the vehicle 150Ah of 12V or 75Ah of 24V are being used.

  The batteries are lead acid to make It cost effective.

  If a charger which can output a current of 50A at 12V, it will take 3 hours to charge the batteries.

- **Solar Panel**: 560W Solar Panel is to be mounted at the top of the cart.

$$P = VI = 560W = 12V * I$$

$$I = 46A$$

If the batteries are of 150Ah, then it will take almost more than 3 hours to fully charge the system. If the batteries are of 24V then

$$P = VI = 560W = 24V * I$$

$$I = 23A$$

The charging time will be 6 hours because the voltages have been doubled

3.1.5 System Integration

System integration can be visualized using the following diagram:

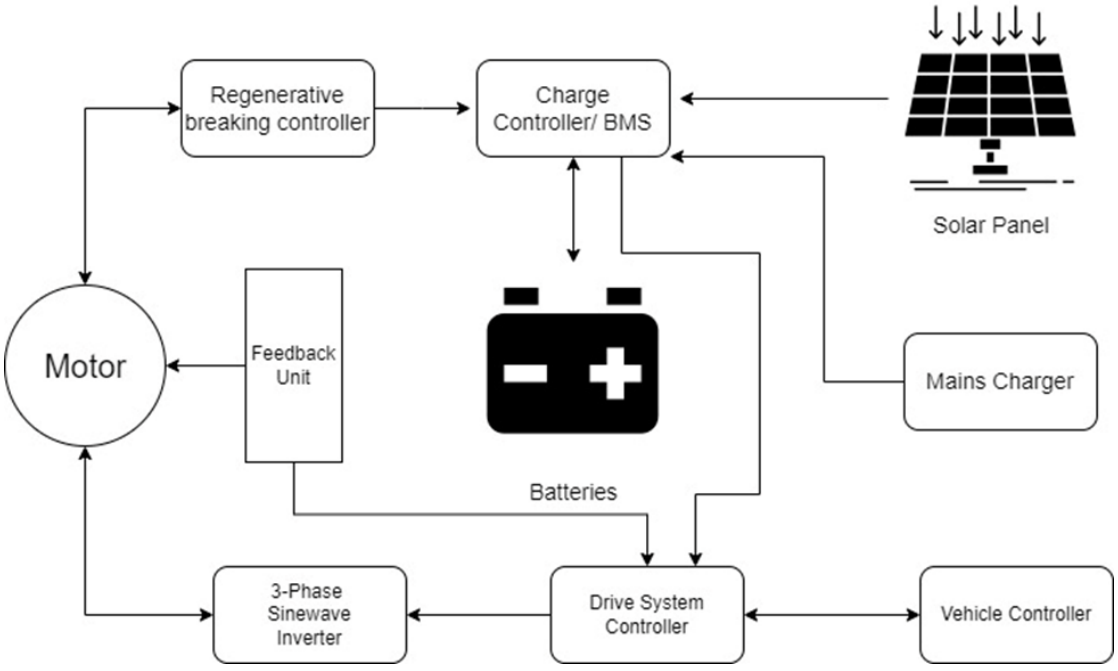

FIGURE 3.32: System Diagram for Electric Vehicle

3.2 Road Sign Detection and Classification

3.2.1 Detection

Road Signs are being detected using two main techniques:

- Color Extraction
- Shape Filtering

In **Color Extraction** road signs having red boundary is are detected only. Since Road signs have a red boundary in Pakistan, they can be easily be detected using this technique.

- **Color Extraction:** Color Extraction of the image is done using the HSV (Hue, Saturation, value) color space rather than the RGB (Red, green and blue). It is because the extraction of colors is easy in HSV. The color space becomes more continues and thus the extraction becomes easy. This is why it is essential to convert every frame into hsv and then do color extracting (red masking) on it for better results.

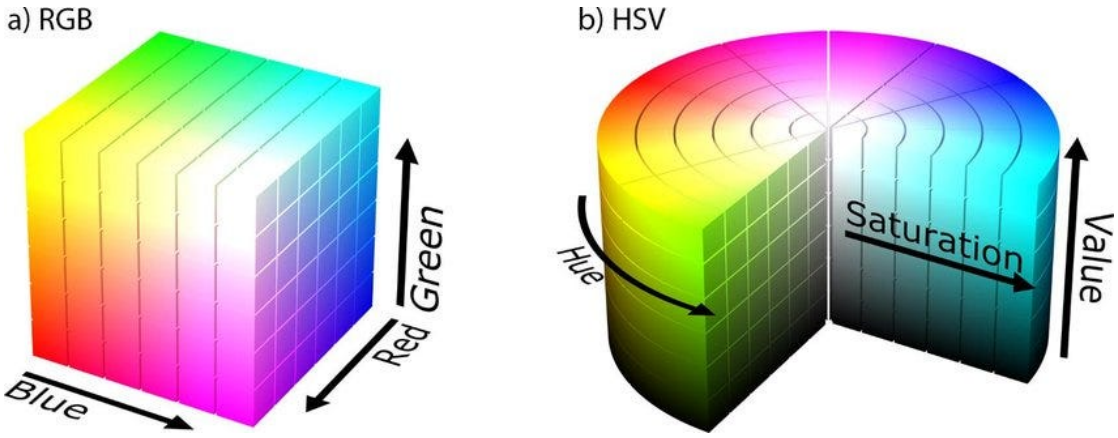

FIGURE 3.33: Difference Between HSV and RGB

FIGURE 3.34: RGB Frame

- **HUE**
  - 160-180
  - 0-10
- **Value**
  - 55-255
- **Saturation:**
  - 55-255

FIGURE 3.35: HSV Image

FIGURE 3.36: Red Masking

- **Shape Extraction:** In order to extract the shape of the figure, we need only triangles and circles. Triangles have only 3 sides while circles have infinite sides. In image processing only approximate number of sides can be found thus an approximation of more than 8 sides can be categorized as a circle. While finding triangles is quite easy and only shapes having 3 sides will be

extracted as triangles. This can be done using the contour finding method of openCV which allows us to find the number of figures as well as sides of the figure as well.

As seen the in the rgb frame, it contains a two way traffic road sign which needs to be first detected and then classified:

FIGURE 3.37: Bounding Box on Road Sign

3.2.2 Classification

In order to classify the road sign, two methods have been adopted:

- ORB Descriptor Matching
- Binary Matching

But before going for any of the above approaches, we first need to crop the frame on the the road sign and pre process that cropped image in order to remove noise and make it able to use for the above matching mentioned.

- **Cropped Image:** Image containing the road sign can easily be cropped using opencv. It provides the coordinates on which a specific shape was found and the whole image can be converted into the cropped image as seen below:
- **Inside Image**: When the road sign is cropped from the frame, it also contains some background which causes problems when matching the image

FIGURE 3.38: Cropped Image

with the database. In order to match the image successfully, we need to extract just the black and white portion. In order to do that we again use the color grading and find the largest figure having the circle or triangle and then do binary matching in order to extract just the black and white part. Following are the steps taken to do so:

- Red Masking of Image
- Inverse of Red Mask
- Fill the the red mask contour
- Bitwise AND between inverse of red mask and filled red mask.
- This will bring the inner black and white part as seen below:

FIGURE 3.39: Inside Black and White Part

As we can see only the black and white part is remaining now.

- **Black Extraction:** In order to do black extraction, simple black color in the hsv color space is extracted from the above image. Following show the results:

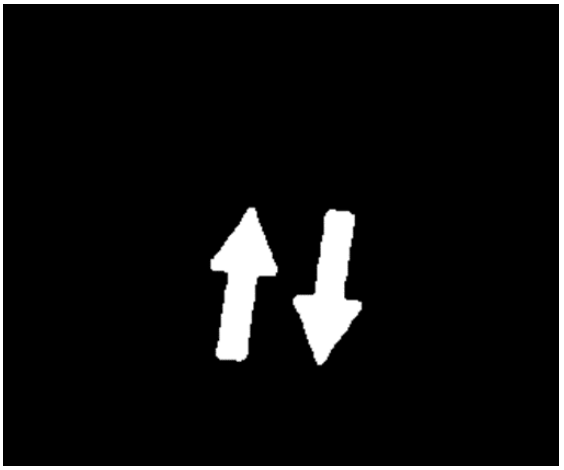

FIGURE 3.40: Black and White portion

As we can see that the black and white portion is extracted now and its ready to be matched by ORB Descriptors or through binary matching.

- **Clustering:** One important step before matching the descriptors or binary matching, we need to make cluster of the classes. Meaning that the features being calculated along the way such as , shape of the sign, number of contours in the figure, number of sides in the figures and number of corners are enough to make clusters of classes having 4 to 5 classes in one cluster. In this way during ORB and binary matching, the chances of false positives will be less and only a few matching will be done which will eventually give us very less inference time.

- **ORB Matching:** ORB (Oriented FAST and Rotated BRIEF) is a feature detection and description algorithm used in image processing. It combines the FAST keypoint detector with the BRIEF descriptor to identify distinctive points in an image and generate corresponding descriptors. ORB is known for its efficiency, offering comparable performance to other algorithms like SIFT and SURF but without the need for patent licensing. It provides rotation invariance by computing keypoint orientations and steering BRIEF descriptors accordingly. ORB's flexibility and speed make it suitable for various computer vision tasks, including object recognition, image stitching, and augmented reality applications. ORB descriptors are binary and 1x32. Thus the matching will be extremely fast and produce better results.

NORM-HAMMING distance between the descriptors are being used in order to identify as an interest point or not. Following are some of the results:

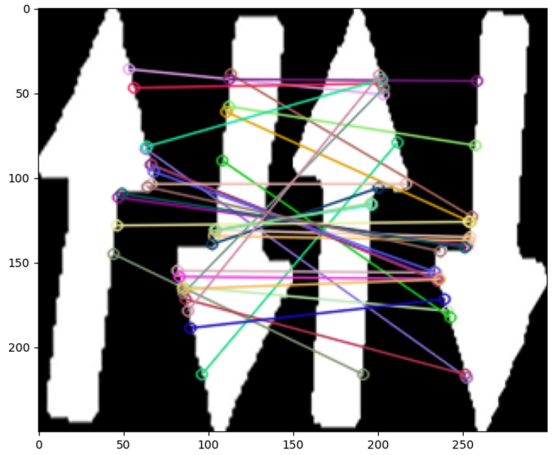

FIGURE 3.41: ORB Matches

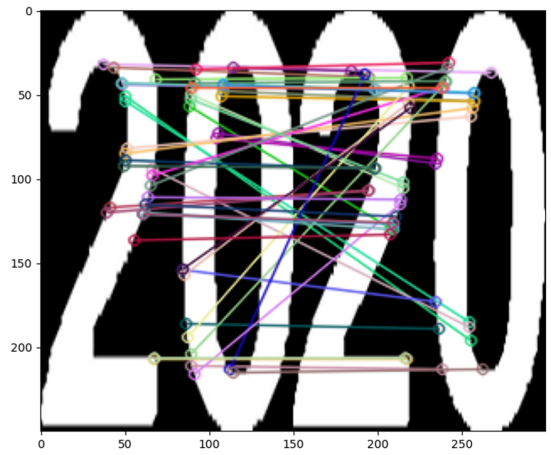

FIGURE 3.42: ORB Matches

- **Binary Matching:** Other method of classifying the road signs is to binary and the query image with all the images stored in the database. The result having the greatest amount of white pixel will represent the predicted class. This technique works because there are very less amount of features in a road sign. The images are already binary and thus can be mapped onto eachother. For this purpose the image in the database and image coming from the live feed must of the same size and they should be able to map onto eachother and then they can be anded with eachother to see the resulting number of pixels. It is a straight forward and efficient technique to detect the propoerties of shapes and images inside a picture for certain use cases.

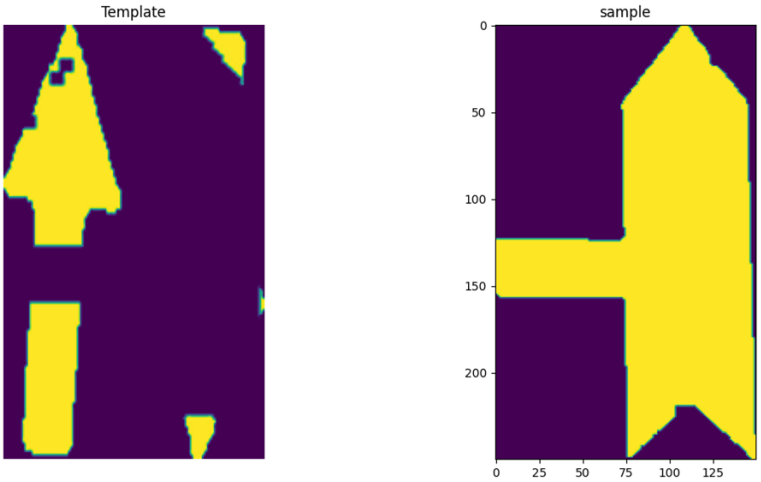

FIGURE 3.43: Misclassified

FIGURE 3.44: Correct Classification

3.3 Service Based App

3.3.1 Tools and Technologies

- Visual Studio Code
- Expo Server
- React Native

3.3.1.1 React Native

React Native is a popular framework for building mobile applications using JavaScript and React. It enables developers to create cross-platform apps that can run on both iOS and Android devices, sharing a single codebase. React Native leverages native components, resulting in apps that offer excellent performance and a native

look and feel. Its component-based architecture promotes code reusability and facilitates the development of complex UIs. React Native allows developers to write code once and deploy it across multiple platforms, including iOS and Android. This significantly reduces development time and effort compared to building separate native apps for each platform. React Native is chosen for this project due to its ability to streamline the development of cross-platform mobile applications. By leveraging React Native, developers can efficiently build and deploy the app to both iOS and Android platforms while maintaining a consistent user experience and leveraging native device capabilities.

3.3.1.2 Expo Server

Expo is a comprehensive platform for building, deploying, and managing React Native applications. It simplifies the development process by providing tools and services such as a command-line interface (CLI), a client app for testing on physical devices, and a collection of APIs for accessing device features. Expo also offers pre-configured app templates and a robust ecosystem of libraries and tools to enhance productivity.

3.3.2 Functionalities of the App

3.3.2.1 SignIn/SignUp

The SignIn/SignUp screen allows users to authenticate or create a new account to access the app's features. Users can enter their credentials (username/email and password) or choose to sign up by providing necessary information and creating a new account. Upon successful authentication or registration, users are directed to the app's main interface.

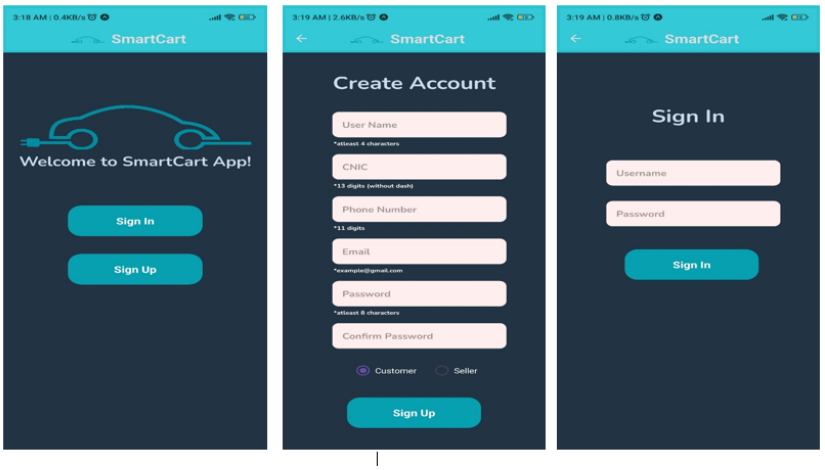

FIGURE 3.45: SignIn/SignUp

3.3.2.2 Map and Seller Tracking

The Map screen displays a map interface with markers representing nearby vendors or sellers. Users can view their current location on the map and interact with the markers to access more information about the vendors, such as their inventory, ratings, and contact details. The map may also include additional features, such as search functionality and route planning for navigating to selected vendors. The user can search the vendors on search bar using the item terms that the sellers sell, in this way it is easy for the buyer to find the seller based on the items and the visibility of seller increases.

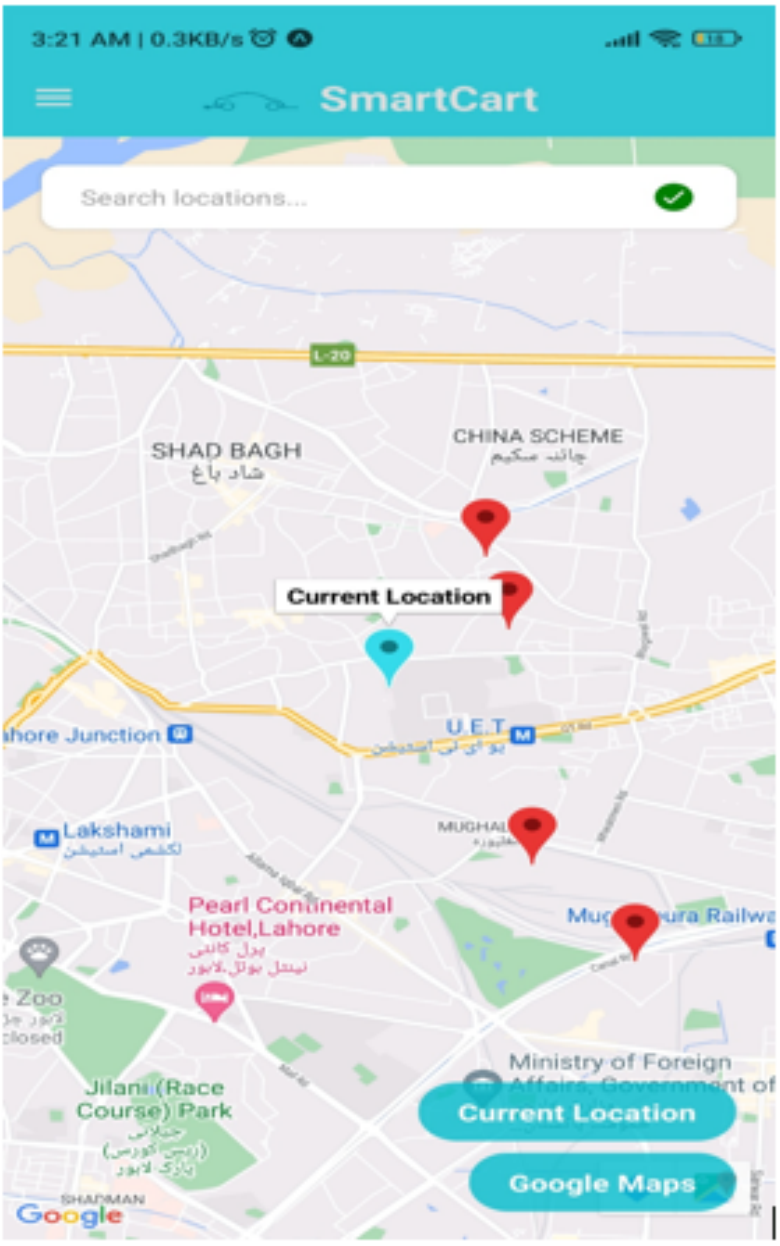

Figure 3.46: Map

3.3.2.3 Order Placement and Cart

The Order Placement screen allows users to browse through the inventory of nearby vendors by clicking on its location and add products to their cart for purchase. Users can view detailed product information, including images, descriptions, and prices, and select the desired quantity before adding items to their cart. Once the shopping is complete, users can proceed to checkout, review their order summary, and place the order for delivery. The seller can see his orders and can proceed to deliver the orders. This Screen also shows the item in the stock and the item placed in the cart by the user. The Screen also shows the number of the seller to contact the seller and the button to see the route to the seller.

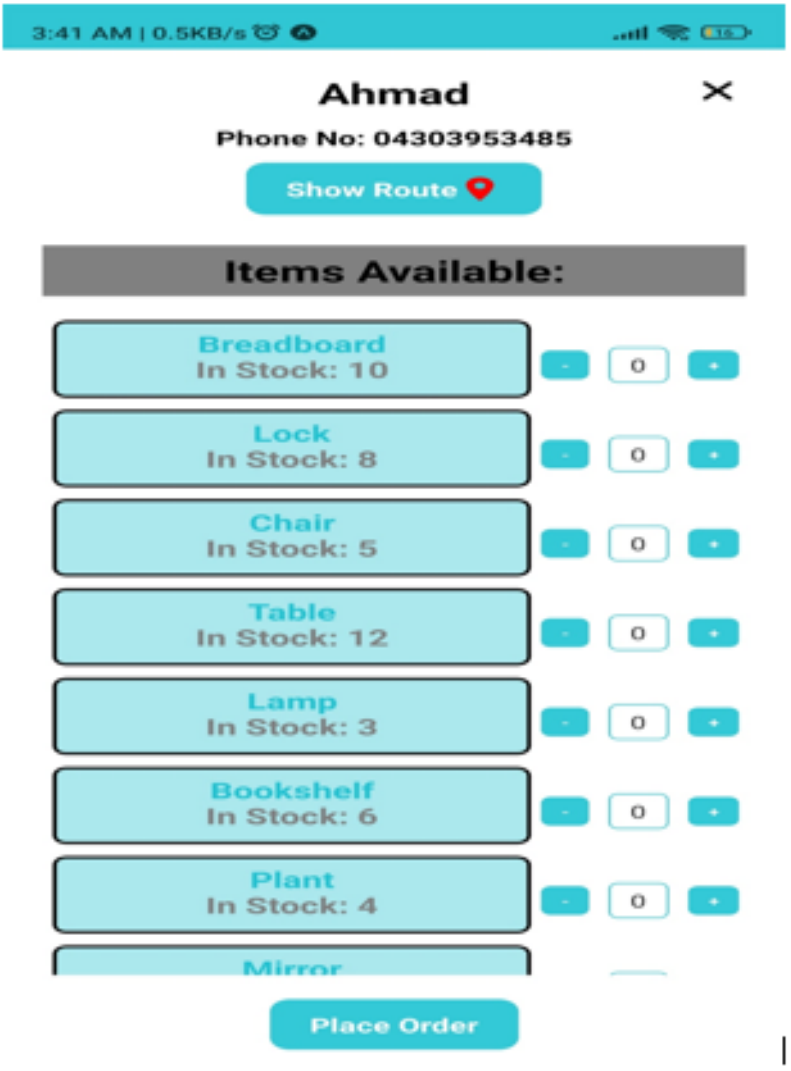

FIGURE 3.47: Order Screen

3.3.2.4 Profile

The Profile screen displays user information and account settings, allowing users to view and edit their profile details, such as name, email, password, and contact information. Users may also have access to additional features, such as order history, saved addresses, and preferences, depending on the app's functionality. The Profile screen provides a centralized location for managing user accounts and preferences within the app. The user can also edit its profile providing way to update its contact, name and address and other information.

FIGURE 3.48: Profile Screen

3.3.2.5 Order and Delivery Tracking

On app for seller, the seller can see the pending and the delivered ordered with amount of the order the location where the order was delivered or to be delivered and the information of the customer. The seller can mark the delivered orders to keep track of its orders and maintain the history. It also contains the information of the order like date of the order placement, time of the order placement. In this way user can easily manage and analyze its orders history efficiently

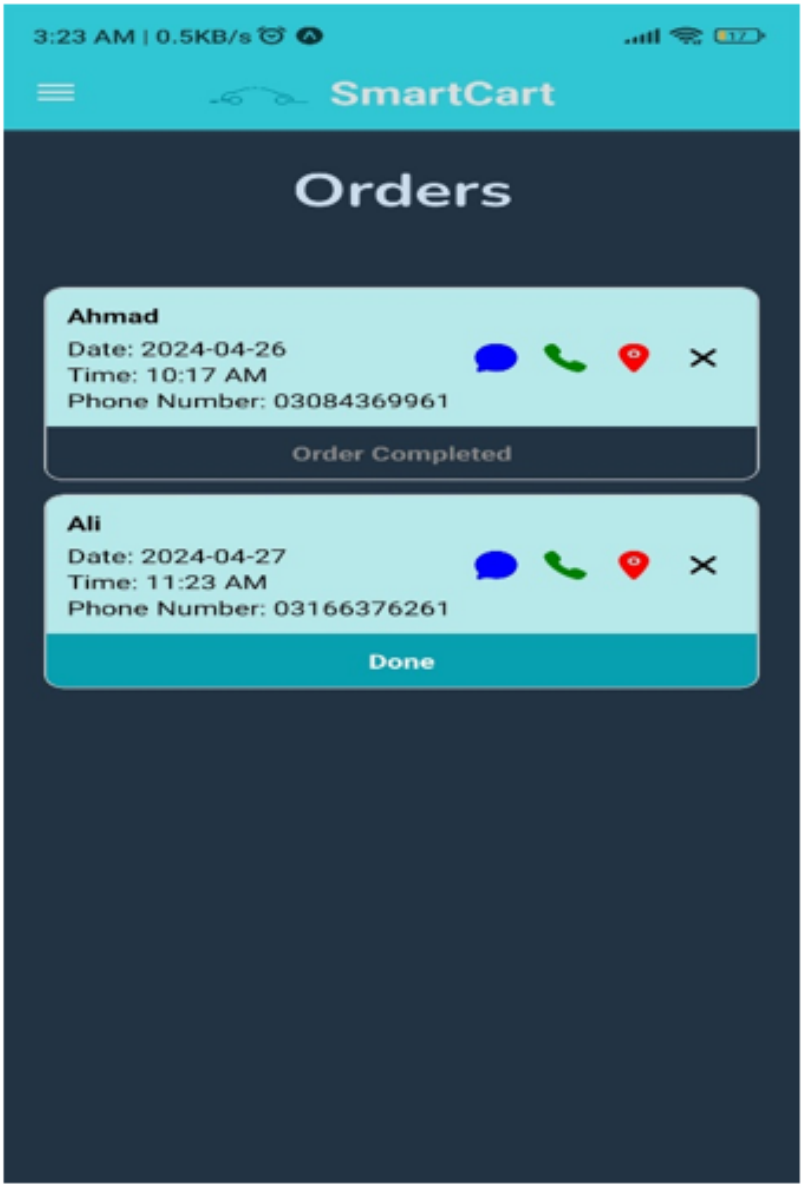

FIGURE 3.49: Order History

3.3.2.6 Inventory Management

The seller can manage its inventory such that he can add new items, update the description of existing items and also update the number of existing items. This provides an efficient way to seller for inventory management.

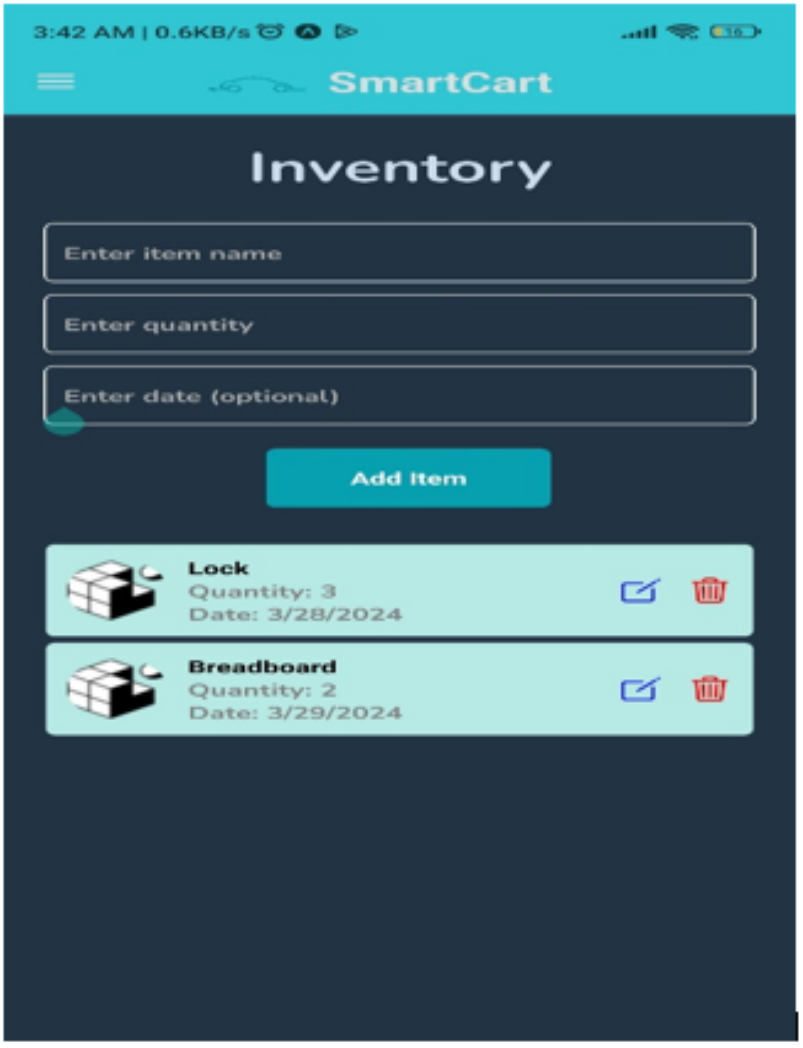

FIGURE 3.50: Inventory

3.3.3 User Flow Diagram

The user flow diagram is a way to visualize all the navigation among all the screens and all the flows that user can follow. It all the screens in the apps and how user go from one screen to other showing the overall design of the app. This also expresses the overall architecture of the app showing essential features and functionalities.

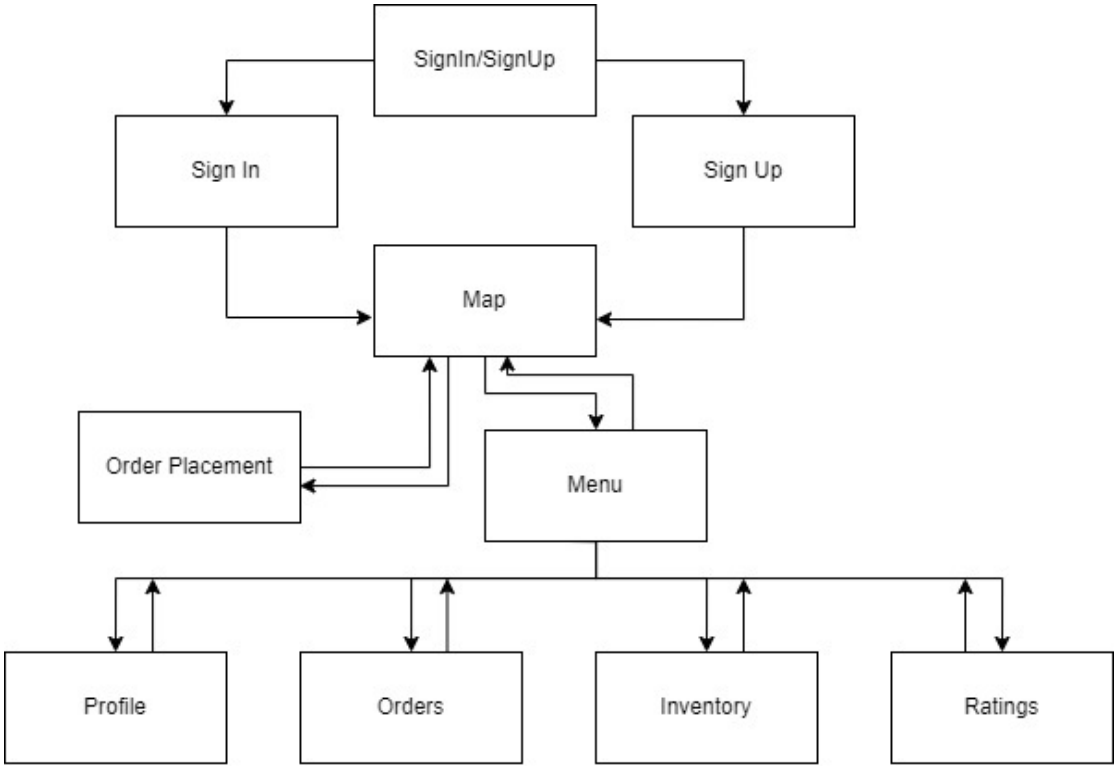

FIGURE 3.51: User Flow Diagram

Chapter 4

Conclusion

4.1 Thesis Statement

The purpose of reinstating the thesis statement is to make a comparison of the initially defined roles and the end results obtained. The statement is as follows:

" **To develop a low cost electric vehicle and a service based app for the improvement in the business needs of street vendors.** "

4.2 Key Findings

:

4.2.1 Efficiency of the System

:

4.2.1.1 Type of the Motor

The efficiency of the whole system depends upon the type of motor used and the circuit being utilised. The type of motor greatly affects the efficiency of the motor. For example, the efficiency of a BLDC motor is around 85% and of a PMSM it is upto 95%. Thus the choice of the motor will greatly affect the efficiency of the whole system.

4.2.1.2 Sensors

The type of sensors involved in the motor commutation also play a major role in the efficiency of the motor because of the firmware is completely dependant on the sensors. If the sensors are not incorporated, the control algorithms will take more processing than the sensored control which will eventually decrease the efficiency. Thus the type of sensors and range of sensors will determine the efficiency but

adding more and more sensors to the motor will not be cost efficient and difficult to manufacture.

4.2.1.3 Control Algorithm

Several control algorithms have different compatibility with different types of motors. Sometimes, it is a matter of compromise that the algorithm is itself very easy to implement but it does not have much efficiency but also at the same time uses less resources. On the other hand, algorithms such as FOC and Direct Torque control will use more resources but will be more efficient for a PMSM. In the end, the decision is about making the system sustainable for a specific type of use.

4.2.1.4 Mosfet Selection

Mosfets being selected can greatly affect the efficiency of the controller because in the end the current has to pass through them. The amount of heat dissipated in them must be very less. Several modern mosfets are being manufactured for the motor controller industry where large amounts of current are being used. Thus a mosfet with low Rds (on) must be the top priority for making a motor controller.

The efficiency of the system in the end depends on making a system which is highly selective. It means that it must be such that the circuits and firmware designed must be very specific for a very specific type of a motor with many or few sensors installed in it. Although there are motor controller availble in the market which can be used for both BLDC and PMSM, but the efficiency will be highly affected because they are made for a specific purpose and not for the other. Plug and Play model will increase the re-useability and user experience, but the overall efficiency of the system will deteriorate.

4.2.2 Battery System

The main problem of batteries faced in the market is that the available batteries cannot be charged at very high currents and when the capacity is increased, the weight of the batteries will also increase. Thus, following problems in the batteries of the system must be addressed:

- **Power Density:**Power density of the batteries should increase to make them light weight.
- **High Discharge Cycles:**Discharge cycles mean the number of times the batteries can be charged and discharged. It should be high so the battery maintenance cost can be reduced.
- **Low Charging Time**

4.2.3 Service Based App

4.2.3.1 Connectivity

The service based app part of the project acts as connectivity between the buyer and the seller. Several vendors in a city can or want to sell an good which is needed by someone living far away from him but cant reach him properly. The app acts as a connectivity between them and also provides a better customer reach.

4.2.3.2 Integral Part of the System

The whole sense of the project cannot be justified without the help of the service based app. Installing a solar panel on an electric vehicle for charging purposes is only beneficial in this usecase. That is why the most integral part of the system is the service based app.

4.3 Limitations

Following are some of the limitations faced during the implementation and experimentation of the whole system:

4.3.1 Lack of Efficient Components

In Pakistan, the components available for the development of an EV are not latest or modern and have been present in the market for a very long time. Their end-of-life has passed and most of the components available in the market are second hand and cannot be used to make an efficient system.

4.3.2 Government Policies

The policy of government regarding the electric vehicle market of Pakistan is very disappointing. The taxes on the import of pre-manufactured components have been releived but the components that are used to make larger modules are not tax free. If the policy of government changes towards the development of an EV in Pakistan, it can become a hub of cost effective and energy efficient electric vehicles.

4.3.3 Lack of Knowledge

Street vendors belong to one of the most poor class of Pakistan who are already far away from the modern technology. There is a huge gap which needs to be filled. Lack of knowledge among them makes it difficult for the system to be adopted by them

Chapter 5

Future Work

5.1 Electrical Design

5.1.1 Enhancing Inverter Efficiency

5.1.1.1 Improving Firmware

Upgrade the existing firmware to support sine wave output, which entails optimizing code to generate smooth sinusoidal waveforms. This enhancement will improve the inverter's efficiency, reduce harmonic distortion, and ensure compatibility with a wider range of appliances.

5.1.1.2 Improved Mosfets

Integrate MOSFETs with higher ratings to handle increased power demands while maintaining stability and reliability. By utilizing MOSFETs with higher current and voltage ratings, the inverter can deliver higher power output without compromising performance or safety.

5.1.1.3 Efficient PCB Layout

Design the printed circuit board (PCB) layout to optimize power routes and minimize signal interference. This involves carefully planning the placement of components, traces, and power planes to reduce resistance, capacitance, and inductance, thereby improving overall efficiency and reducing heat dissipation.

5.1.2 Enhanced Power and Battery Backup

Upgrade the inverter's power stage components and circuitry to support higher power outputs while maintaining efficiency and reliability. This may involve incorporating larger transformers, capacitors, and heat sinks to handle increased power

demands without overheating or voltage drop. Integrate high-capacity lithium-ion batteries with advanced battery management systems (BMS) to extend battery backup capacity and ensure reliable operation during prolonged power outages. Implement features such as intelligent charging algorithms and deep discharge protection to maximize battery lifespan and performance.

5.1.3 Improvement of Parametrization of Inverter

Develop a comprehensive parameterization system that allows users to adjust various parameters such as output voltage, frequency, and waveform shape to meet specific application requirements. This involves implementing user-friendly interfaces, such as digital displays and rotary encoders, to facilitate easy adjustment and monitoring of inverter settings.

5.2 Computer Vision

5.2.1 Enhancing Road Sign Detection

Fine-tune the road sign detection algorithm by optimizing parameters such as edge detection thresholds, feature extraction techniques, and object classification models. This involves collecting and labeling large datasets of road sign images to train and validate the algorithm's performance under various environmental conditions and lighting conditions. Deploy efficient hardware platforms, such as dedicated image processing units (IPUs) or field-programmable gate arrays (FPGAs), to accelerate image processing tasks and improve real-time response capabilities. This includes optimizing algorithms for parallel execution and leveraging hardware-accelerated compute resources to minimize latency and maximize throughput.

5.2.2 Utilizing Computer Vision for Lane Change Indication

Integrate computer vision algorithms to automatically detect lane changes and activate corresponding indicators to alert other drivers. This involves deploying cameras or other sensors to capture real-time video feeds of the road environment and processing them using object detection and tracking algorithms to identify lane boundaries and vehicle trajectories. Implement robust decision-making logic to determine when to activate lane indicators based on factors such as vehicle speed, steering angle, and surrounding traffic conditions. This includes incorporating machine learning models to predict the likelihood of lane changes and adjust indicator activation accordingly to enhance safety and minimize driver distraction.

5.2.3 Detecting Obstacles and Potholes

Develop advanced image processing algorithms to detect obstacles and potholes on the road surface using data from onboard cameras or lidar sensors. This involves analyzing image data to identify characteristic features of obstacles and potholes, such as size, shape, and texture, and distinguishing them from background clutter.Implement real-time obstacle detection and classification algorithms to assess the severity and potential impact of detected obstacles on vehicle safety and performance. This includes estimating the distance, relative speed, and trajectory of obstacles to facilitate appropriate collision avoidance maneuvers or speed adjustments.

5.2.4 Providing Feedback to the Controller

Utilize computer vision techniques to extract relevant information from road signs, traffic signals, and other visual cues to provide feedback to the vehicle's control system. This includes detecting speed limit signs, stop signs, and other regulatory signs using image recognition algorithms and conveying this information to the controller for adaptive speed control and compliance with traffic laws. Implement a hierarchical decision-making framework that integrates feedback from computer vision systems with other sensor inputs, such as GPS data and inertial measurements, to prioritize and adaptively adjust vehicle behavior based on the perceived environment and operational constraints.

5.3 Service Based Application

5.3.1 Enhancing Buyer Side Features

Expand the functionality of the buyer-side interface to provide users with detailed insights into current sellers, including their inventory, pricing, and ratings. This involves integrating advanced search and filtering capabilities to allow users to find sellers based on specific criteria, such as location, product category, or seller reputation.Implement personalized recommendation algorithms to suggest relevant sellers and products based on user preferences, purchase history, and browsing behavior. This includes analyzing user data to identify patterns and trends and leveraging machine learning techniques to generate tailored recommendations that enhance user engagement and satisfaction.

5.3.2 Improving Live Location Accuracy

Optimize the live location tracking system to improve accuracy and reliability, especially in urban environments with dense buildings and obstructed line-of-sight

conditions. This involves enhancing GPS signal processing algorithms to mitigate multipath interference, signal attenuation, and satellite signal blockage, as well as integrating additional positioning technologies such as Wi-Fi triangulation or cellular-based location services.Implement predictive modeling techniques to anticipate and compensate for GPS signal variations and environmental factors that affect location accuracy, such as atmospheric conditions, terrain elevation, and urban canyon effects. This includes incorporating machine learning algorithms to analyze historical location data and predict future position estimates with greater precision and confidence.

5.3.3 UI/UX Design Optimization

Conduct comprehensive user research and usability testing to identify pain points, usability issues, and opportunities for improvement in the app's user interface and user experience

References

[1] G. Bhide. Implementation and study of bldc motor drive system. *Academia.edu*, 2023.

[2] Joshua Castle. Design of a printed circuit board for a sensorless three-phase brushless dc motor control system. 06 2020.

[3] Nwosu E.U, Ewetumo Ewetumo, Adeseye Arogunjo, and Adeyemi B. Development of 5 kva inductive heating system. *International Research Journal of Innovations in Engineering and Technology*, 05:29–34, 01 2021.

[4] Texas Instruments. Sensorless foc. Technical report.

[5] Texas Instruments. Tida-00472 reference design. Technical report, Texas Instruments, n.d.

[6] Yannis Karnavas, Anestis Topalidis, and Maria Drakaki. Development and implementation of a low cost c- based brushless dc motor sensorless controller: A practical analysis of hardware and software aspects. *Electronics*, 8, 12 2019.

[7] Microchip. En532365 - foc control, n.d.

[8] Dávid Rau, Jozef Rodina, Lukáš Palkovič, and Peter Hubinský. Sensorless field oriented control of bldc motors for mavs. *Transactions on Electrical Engineering*, 4 (2015):91–96, 12 2015.

[9] NXP Semiconductors. High voltage bldc drive system. Technical report, NXP Semiconductors.

[10] STMicroelectronics. 5kw motor controller. Technical report.

[11] OpenCV Team. Opencv: Introduction to sift (scale-invariant feature transform).

[12] OpenCV Team. Opencv: Orb (oriented fast and rotated brief).

[13] Unknown. Brushless dc motor control made easy. Technical report, Microchip Technology, n.d.

[14] L. Zhang, R. Zhang, W. Dong, and H. Zou. B-sift: A binary sift based local image feature descriptor. In *IEEE Conference on Computer Vision and Pattern Recognition (CVPR)*, November 2012.