EE 230 - Analog Lab

Wadhwani Electronics Laboratory
Electrical Engineering, IIT Bombay

Instructions:

- Write down all your observations in notebook.
- Verify your calculations with your respective TA.
- Draw all the required waveforms with proper annotations in your notebook after observing on DSO.

Objectives:

- Op-amp Applications
  - Section - A (Full Wave Rectifiers)
  - Section - B (Multivibrators)

Section - A (Full Wave Rectifiers)

1. **Center Tapped Full-Wave Rectifier**

   (a) A center tapped full wave rectifier design is as shown in Fig. [1] with $R = 22k\Omega$ and 1N4007 diodes. Apply a sinusoidal input signal, V_{in} of $20V_{pp}$ and $1kHz$ frequency to the primary coil of transformer. The ratio of the number of turns from the primary to the secondary side is approximately 6:1. Signal at V_{in1} can be viewed as actual sinusoidal input to be rectified. Plot V_{out} and V_{in1} waveforms in the same graph.

   (b) Why is there a voltage difference between the peak voltage of V_{in1} and V_{out}?.

   (c) Connect the 1 μF capacitor across R. Observe the output. When either diode is ON, the capacitor charges to $V_{in1} - V_D$. When the diode is OFF, the capacitor should ideally hold the voltage across it to provide DC output. However, due to finite load resistance, the capacitor will discharge through the resistor R. Thus V_{out} will have ripples. Ripple amplitude is given as

   $$V_{ripp} = \frac{V_{in1} - V_D}{2fRC}.$$

   Measure the ripple amplitude at the output V_{out}. Compare the calculated and measured ripple amplitude.
   [Note: While measuring ripple amplitude, setup your probe to AC coupling mode so that ripple can be measured accurately.]

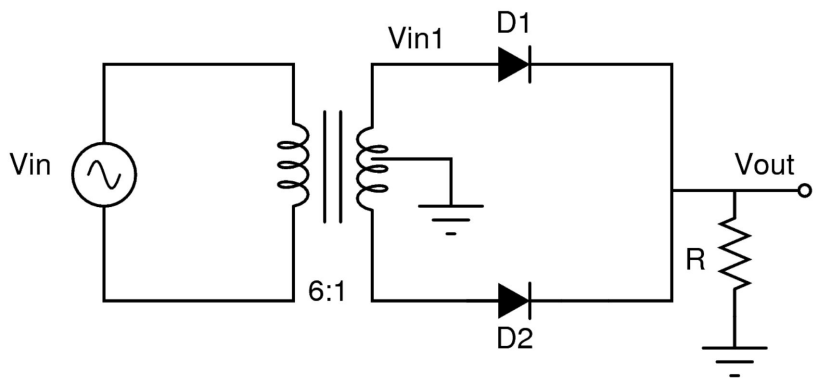

Figure 1: Center Tapped Full Wave Rectifier Circuit

2. **Full Wave Precision Rectifier**

Fig. [2] shows a full wave precision rectifier design.

(a) Implement the half-wave rectifier first (shown in the box in Fig.[2]). Apply a sinusoidal input signal, V_i of $2V_{pp}$ and $1kHz$ frequency. Plot the output of the half-wave rectifier and V_i waveform on the same plot.

(b) Also plot V_o' and output of the half wave rectifier on the same plot.

(c) Compare the given half wave rectifier output with the half-wave rectifier circuit output done in Lab-1 (refer to your notebook). Explain why there is no difference in peak values of input and output for the given half-wave rectifier as compared to the Lab-1 half-wave rectifier.

(d) Now implement the complete full wave rectifier circuit. Apply a sinusoidal input signal, V_i of $2V_{pp}$ and $1kHz$ frequency. Plot V_o and V_i waveform on the same plot.

(e) Compare results with centre-tapped full wave rectifier circuit output. Explain why there is no difference in peak values of input and output for the Precision full-wave rectifier as compared to the Centre tapped Full wave rectifier.

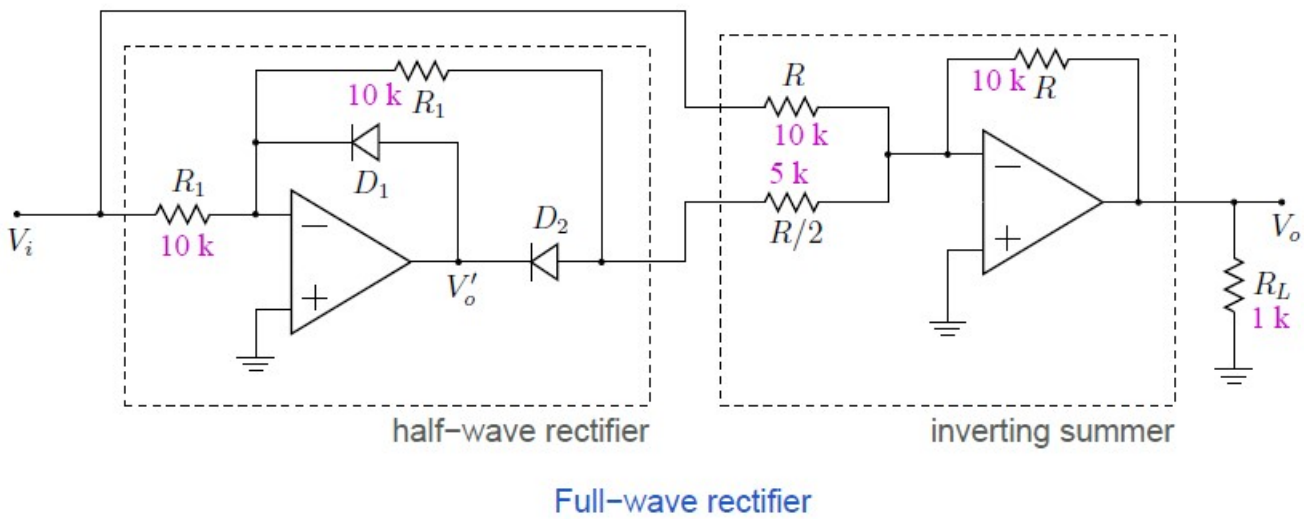

Figure 2: Full Wave Precision Rectifier

Section - B (Multivibrators)

3. Fig. [3] is an astable multivibrator design using an operational amplifier. Use dual supply of $\pm 15V$ for the Op-amp 741 and zener diodes of $4.7V$.

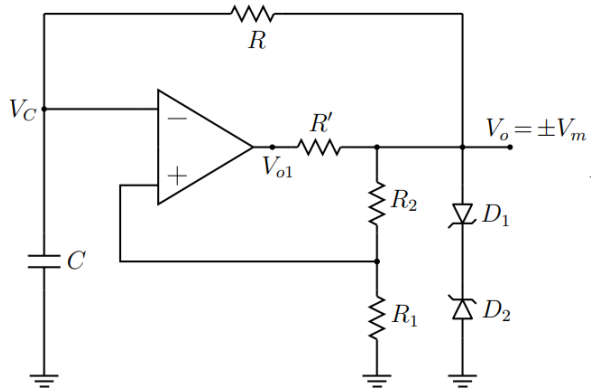

Figure 3: Astable Multivibrator

(a) First connect the circuit in Figure [3] without resistor $R^{'}$ and zener diodes D_1 and D_2.

(b) Observe the Voltages at V_c and V_o at the same time for the values of $C = 0.01\mu F, R = 47k\Omega, R_1 = 33k\Omega, R_2 = 39k\Omega$.

(c) What is the frequency of the waveform obtained at V_o?

(d) Now, repeat steps (b) and (c), adding resistor $R^{'}$ with the value of $1k\Omega$ and zener diodes D_1 and D_2.

(e) Why can't we replace R′ with a short while keeping diodes D_1 and D_2 in the circuit? Explain theoretically. Don't try it on hardware.

(f) Observe the voltages at V_{o1} and V_o. What are the voltage levels at both points? Are they different? If yes, why?

(g) What is the frequency of the waveform obtained at V_o?

4. Fig. [4] shows a monostable multivibrator design using an operational amplifier. Use a dual supply of $\pm 15V$ for the Op-amp 741 and zener diodes of $4.7V$.

   (a) Connect the circuit. Now, momentarily shortcircuit the capacitor by connecting the opamp's negative supply voltage and inverting terminal.

   (b) Capture the output pulse at V_o. Calculate the output pulse width. Compare the measured output pulse width with the calculated pulse width.

   (c) What is the objective of short-circuiting the capacitor?

   (d) How many stable states does the circuit has? Write down their values.

   (e) Observe voltage at inverting terminal ($V-$) and output voltage (V_o) simultaneously.

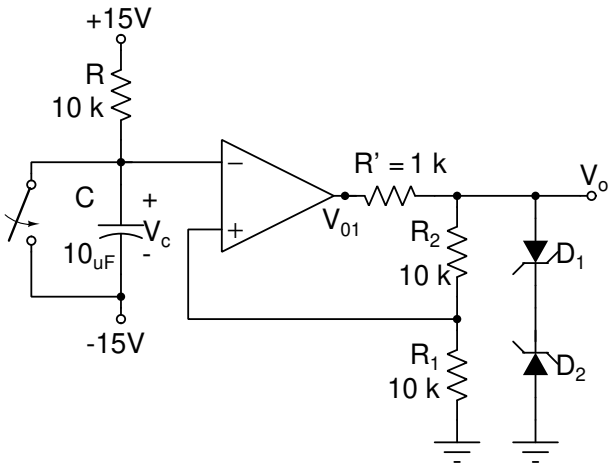

Figure 4: Monostable multivibrator