EE337 Microprocessors Laboratory

Wadhwani Electronics Laboratory
Electrical Engineering IIT Bombay

Problem set: 7(a) Date: March 2 , 2026

In this part of the lab, you will learn about keypad interfacing, i.e., how to read the pressed key.

1. [20 points] The flow-chart in Figure 1 shows the algorithm to read from the keypad.

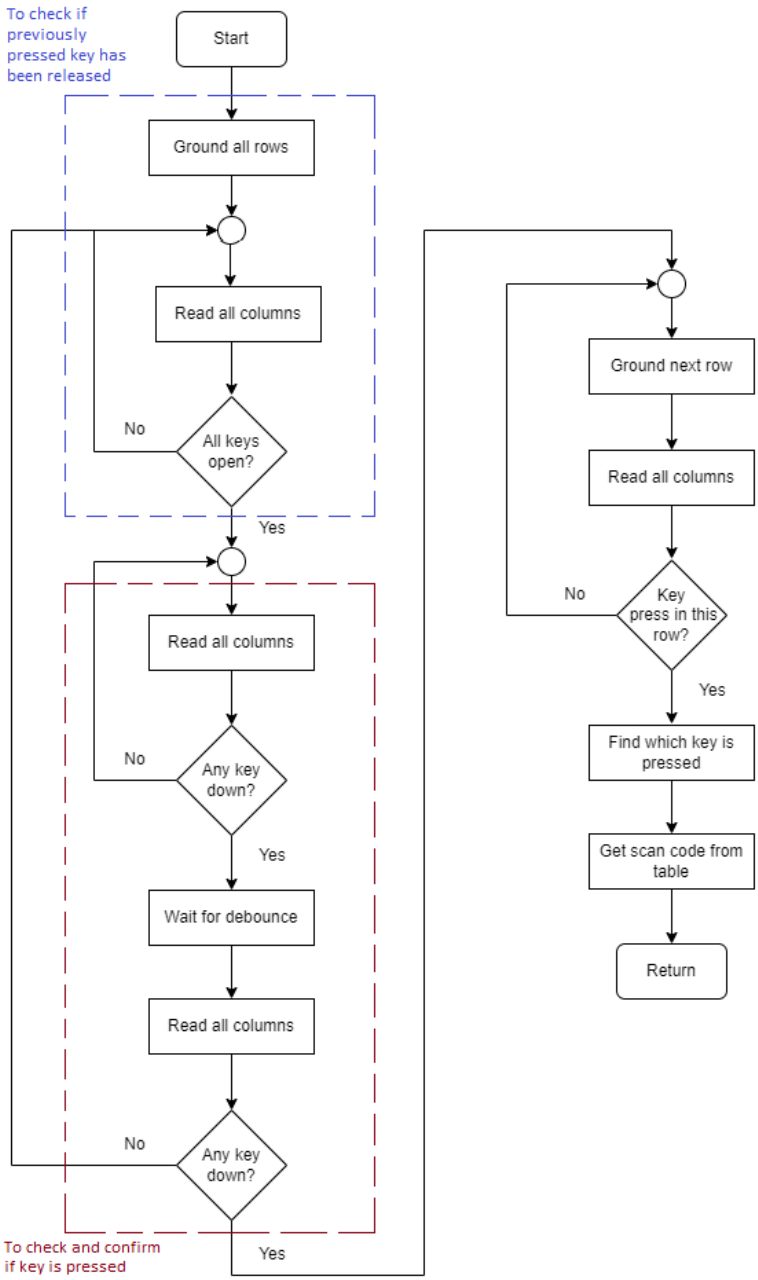

Figure 1: Flowchart describing procedure for reading keys

Note: Keep debounce delay of 20 ms.

The internal circuit diagram of the keypad is given Figure 2.

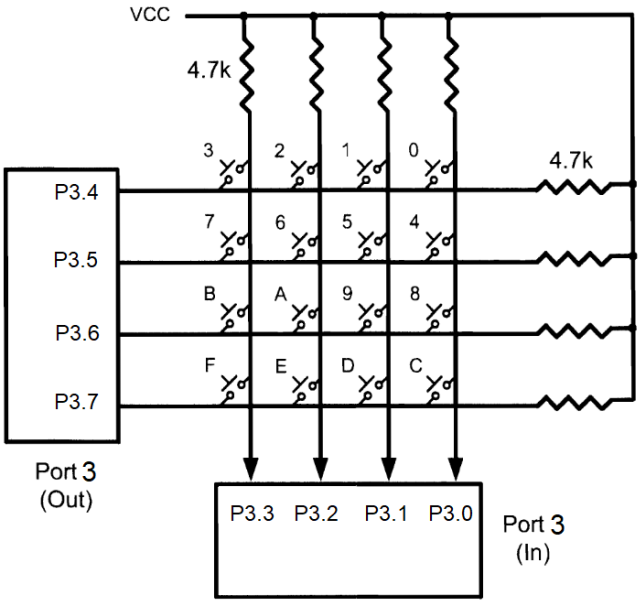

Figure 2: Keypad Circuit

Note that the rows are outputs and columns are inputs.
Refer the images in Figure 3 to understand the keypad.

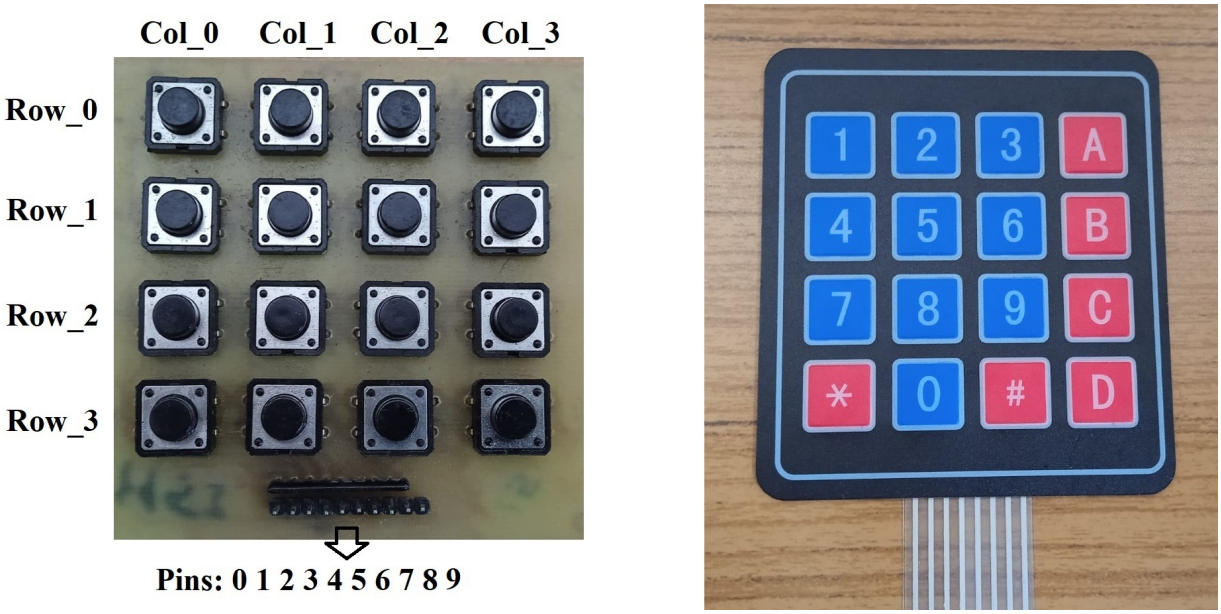

Figure 3: Keypad Mapping

The image on the right describes which key corresponds to which character. For

example, the key at Row 0, Column 0 corresponds to the character '1'.

Refer to Table 1 for pin mapping.

Pins	Mapping	Pt-51
Pin0	Row 3	P3.7
Pin1	Row 2	P3.6
Pin2	Row 1	P3.5
Pin3	Row 0	P3.4
Pin4	Column 0	P3.3
Pin5	Column 1	P3.2
Pin6	Column 2	P3.1
Pin7	Column 3	P3.0
Pin8	Pull-up resistance	$5V$ on board
Pin9	Not connected	-

Table 1: Pin mapping

For $5V$ connect to the onboard power supply pin near USB attach/detach switch.

Task Guidelines:

- Your code must correctly read the key pressed using the keypad and display it on the LCD.
- Use debug sessions on Keil to verify keypress detection by giving inputs via I/O peripherals $\rightarrow$ Port3.